American Standard
HEATING & AIR CONDITIONING

MITSUBISHI ELECTRIC

Nv-SERIES

SUBMITTAL DATA: MSZ-EF18NAW-U1

18,000 BTU/H WALL-MOUNTED INDOOR UNIT FOR MXZ-C MULTI-ZONE HEAT-PUMP SYSTEMS

Job Name:	
System Reference:	Date:

Indoor Unit: MSZ-EF18NAW-U1

Wireless Remote Controller

ACCESSORIES:

- □ Deodorizing Filter (MAC-3000FT-E)
- □ Electrostatic Anti-allergy Enzyme Filter (MAC-2330FT-E)
- □ Backlit, Wall-mounted, Wireless Controller (MHK1)
- □ Portable Central Controller (MCCH1)
- □ Wired MA Controller (PAR-33MAA[1])
- □ Simple MA Controller (PAC-YT53CRAU[1])
- □ Touch MA Controller (PAR-CT01MAU-SB[1])
- □ Wired Remote Sensor (PAC-SE41TS-E)
- □ Wireless Temperature and Humidity Sensor (PAC-USWHS003-TH-1)
- □ Outside Air Sensor for MHK1 (MOS1)
- □ System Control Interface (MAC-333IF-E[2])
- □ Wireless Interface (PAC-USWHS002-WF-1)
- □ Thermostat Interface (PAC-US444CN-1)
- □ kumo station® (PAC-WHS01HC-E)
- □ USNAP Interface (PAC-WHS01UP-E)
- □ IT Extender (PAC-WHS01IE-E)
- □ BACnet®and Modbus® Interface (PAC-UKPRC001-CN-1)
- □ Lockdown Bracket for Wireless, Hand-held, Remote Controllers (RCMKP1CB)
- □ Soft Dry Cloth (MAC-1001CL-E)
- □ i-see Sensor™ (PAC-SH91MK-E)
- □ Blue Diamond Sensor Extension Cable—15 Ft. (C13-103)
- □ Blue Diamond Alarm Extension Cable—6.5 Ft. (C13-192)
- □ Blue Diamond MultiTank—collection tank for use with multiple pumps (C21-014)
- □ Blue Diamond Rubber Foot Pads (F10-010)
- □ Mini Condensate Pump—230V application (SI30-230)
- □ MegaBlue Advanced Blue Diamond Condensate Pump w/ Reservoir & Sensor (X87-835-110 to 250V)
- □ MaxiBlue Advanced Blue Diamond Mini Condensate Pump w/ Reservoir & Sensor [110V] up to 48,000 Btu/h [recommended] (X87-711-110V)
- □ MaxiBlue Advanced Blue Diamond Mini Condensate Pump w/ Reservoir & Sensor [208/230V] up to 48,000 Btu/h [recommended] (X87-721-208/230V)
- □ MicroBlue Blue Diamond Mini Condensate Pump [110/208/230V] up to 18,000 Btu/h (X85-003)
- □ Fascia Kit for MicroBlue Pump – mounts the MicroBlue and sensor directly beneath the indoor unit (T18-016)
- □ Drain Pan Level Sensor [Control for indoor unit shut off to prevent drain pan overflow] (DPLS2)
- □ 3 Pole Disconnect Switch [30A/600VUL] [fits 2"X4" utility] - Black (TAZ-MS303)
- □ 3 Pole Disconnect Switch [30A/600VUL] [fits 2"X4" utility] - White (TAZ-MS303W)
- □ 1/4" x 1/2" x 15' / 1/2" Lineset (Twin-Tube Insulation) (MLS141212T-15)
- □ 1/4" x 1/2" x 30' / 1/2" Lineset (Twin-Tube Insulation) (MLS141212T-30)
- □ 1/4" x 1/2" x 50' / 1/2" Lineset (Twin-Tube Insulation) (MLS141212T-50)
- □ 1/4" x 1/2" x 65' / 1/2" Lineset (Twin-Tube Insulation) (MLS141212T-65)
- □ 1/4" x 1/2" x 100' / 1/2" Lineset (Twin-Tube Insulation) (MLS141212T-100)

[1]Requires MAC-333IF-E [2]Allows MSZ-EF indoor units to connect to an MA controller

SPECIFICATIONS:

Rated Capacity*		
Cooling*[1]	Btu/h / W	17,200
Heating at 47° F*[2]	Btu/h / W	21,600

Rating Conditions per AHRI Standard:
*[1] Cooling | Indoor: 80° F(27° C)DB / 67° F(19° C)WB ; Outdoor: 95° F(35° C)DB / 75° F(24° C)WB
*[2] Heating at 47°F | Indoor: 70° F (21° C)DB / 60° F (16° C)WB ; Outdoor: 47° F (8° C)DB / 43° F (6° C)WB

For data on specific indoor units (all ducted, all non-ducted, and both ducted and non-ducted) combinations, see the Multi-zone Outdoor Unit Technical and Service Manual.

Electrical Power Requirements	208 / 230V, 1-Phase, 60 Hz	
Minimum Circuit Ampacity (MCA)	A	1
Blower Motor (ECM)	F.L.A.	0.67
Blower Motor Output	W	30
Field Drainpipe Size O.D.	In.(mm)	5/8 (15)

Airflow Rate (Lo - Med - Hi - Super Hi - Powerful)			
Cooling	DRY	CFM	205-240-279-328-388
	WET		176-206-240-282-334
Heating	DRY		226-258-318-392-466

Sound Pressure Level (Lo - Med - Hi - Super Hi - Powerful)		
Cooling	dB(A)	30-33-36-40-43
Heating		30-33-37-43-49

External Dimensions (H x W x D)	In.(mm)	11-3/4 x 34-13/16 x 7-11/16 (298 x 884 x 195)
Net Weight	Lbs.(kg)	26 (11)
External Finish	Munsell 3.7PB 2.0/0.1	

Refrigerant Piping (Flared)		
Liquid (High Pressure)	In.(mm)	1/4 (6.35)
Gas (Low Pressure)		3/8 (9.52)

Specifications are subject to change without notice.

© 2018 Mitsubishi Electric Trane HVAC US LLC. All rights reserved.

DIMENSIONS: MSZ-EF18NAW-U1

Unit: inch

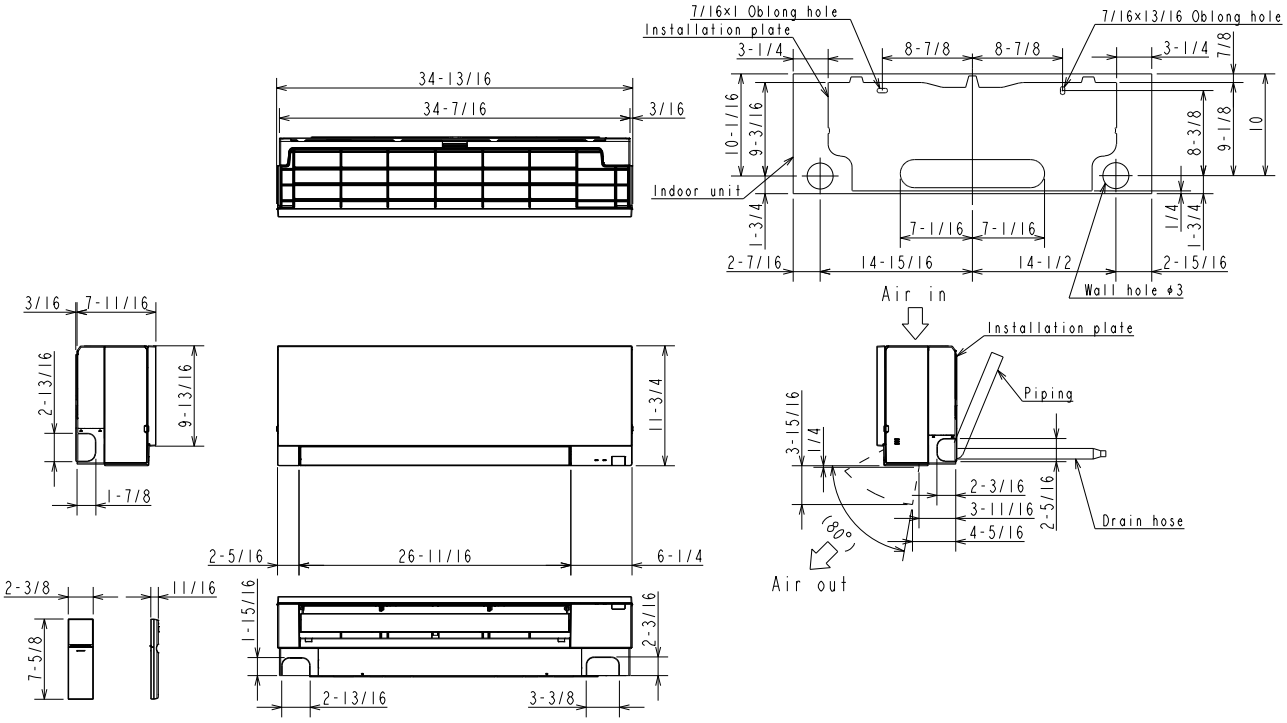

MSZ-EF15/18NA

Piping	Insulation	ϕ1-7/16 O.D
	Liquid line	ϕ1/4 - 19-11/16 (Flared connection ϕ1/4)
	Gas line	ϕ3/8 - 16-15/16 (Flared connection ϕ1/2)
Drain hose		Inslation ϕ1-1/8 Connected part ϕ5/8 O.D active length 15-3/8

Note: Extension pipe size refer to the specifications table.

Specifications are subject to change without notice.

© 2018 Mitsubishi Electric Trane HVAC US LLC. All rights reserved.