MODEL	TLGHF1200RVX01A	SIGN	

Heat exchange system	Heat recovery ventilating system
Heat exchanger material	Special treated paper plate heat exchanger
Cladding	Galvanized steel sheet
Heat insulation material	Self-extinguishing urethane foam
Motor	EC motor
Blower	9 5/8 in. (245mm) diameter centrifugal fan
Filter	Non-woven fabrics filter (EU-G3)
Surrounding air condition	Shall be between 14°F(-10℃)and 104°F(+40℃), 80%RH or less
Suction air condition	Shall be lower than 104°F(+40℃), 80%RH
Supply fan operation under low outdoor temperature	14°F (-10℃) to 5°F (-15℃) : Intermittent operation 60 min ON, 10 min OFF. 5°F (-15℃) or less : Intermittent operation 55 min OFF, 5 min ON.
Function	Heat recovery ventilation/ Bypass ventilation, Fan speed 1,2,3,4
Weight	251lbs (114kg)
Electrical power supply	Single phase 208-230V 60Hz

Ventilation mode			Heat recovery mode				Bypass mode			
Fan speed			SP4	SP3	SP2	SP1	SP4	SP3	SP2	SP1
Running current		[A]	5.40	2.80-2.45	1.35-1.16	0.60	5.40	2.55	1.26	0.65
Input power		[W]	880	440	200	80	880	440	210	85
Air volume		[CFM]	1200	900	600	300	1200	900	600	300
		[m^3/h]	2039	1529	1019	510	2039	1529	1019	510
		[W/CFM]	0.73	0.49	0.33	0.27	0.73	0.49	0.35	0.28
External static pressure		[InH_2O]	0.59	0.33	0.15	0.04	0.59	0.33	0.15	0.04
		[Pa]	147	83	37	10	147	83	37	10
Exchange efficiency [%]	Temperature		67.0	73.0	76.5	81.0	-	-	-	-
	Enthalpy	Heating	64.0	68.5	74.5	80.0	-	-	-	-
		Cooling	50.0	56.5	64.5	71.0	-	-	-	-
Noise ※1		[dB]	41.0	36.0	28.0	19.5	42.0	36.0	28.0	19.5

Insulation resistance	10MΩ or more
Dielectric strength	AC 1000V 1 minute
Maximum current [A]	6.40

※1. Measured at 59in(1.5m) under the center of the unit in an anechoic chamber.

■Characteristic curve

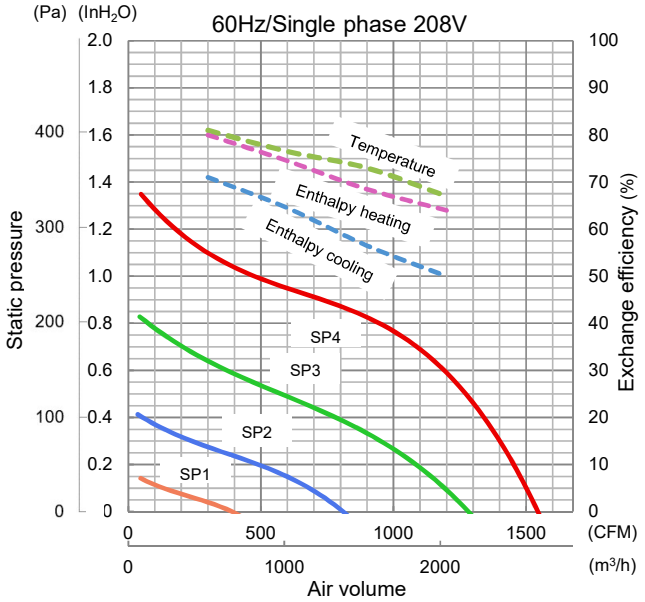

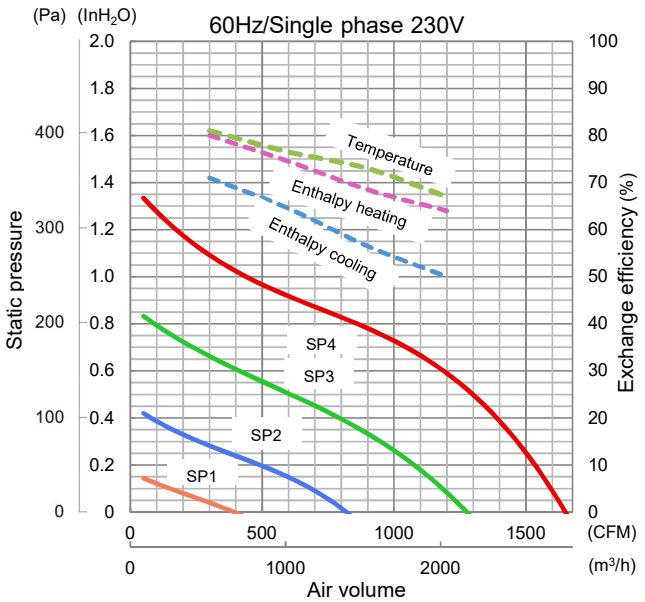

■Attention

1. The running current, the input power, the efficiency and the noise are based on the rating air volume. The noise is easured at 59in. under the center of the unit in an anechoic chamber.
2. Temperature exchange efficiency (%) is an average of heating and cooling.
3. Heat recovery ventilation mode starts automatically while detecting OA temperature lower than 8℃, even Bypass mode is selected. Remote controller continues to display "Bypass ventilation" in this case.
4. Mitsubishi Electric measures figures in the chart according to Japan Industrial Standard (JIS B 8628-2003). The characteristic curves are measured by chamber method. Only the temperature condition of the efficiency measuring is based on AHRI 1060-2014.
5. The noise level at 59in. away from outlets in the 45° direction is about 20dB greater than the indicated value at fan speed4.
6. On-site measurements by pitot tube method could be as much 20% difference from JIS test room conditions. If the measuring point is close to sources of turbulence like bends, contractions and dampers etc., it is difficult to measure air volume correctly. A straight duct length more than 10D (D=duct diameter) from the source of turbulence is recommended for correct measurement. On-site measurement should therefore be measured in accordance with BSRIA guideline (Commissioning Air Systems. Application procedures for buildings AG3/89.3(2001)).

※Specification may be subject to change without notice.

■Outline drawings

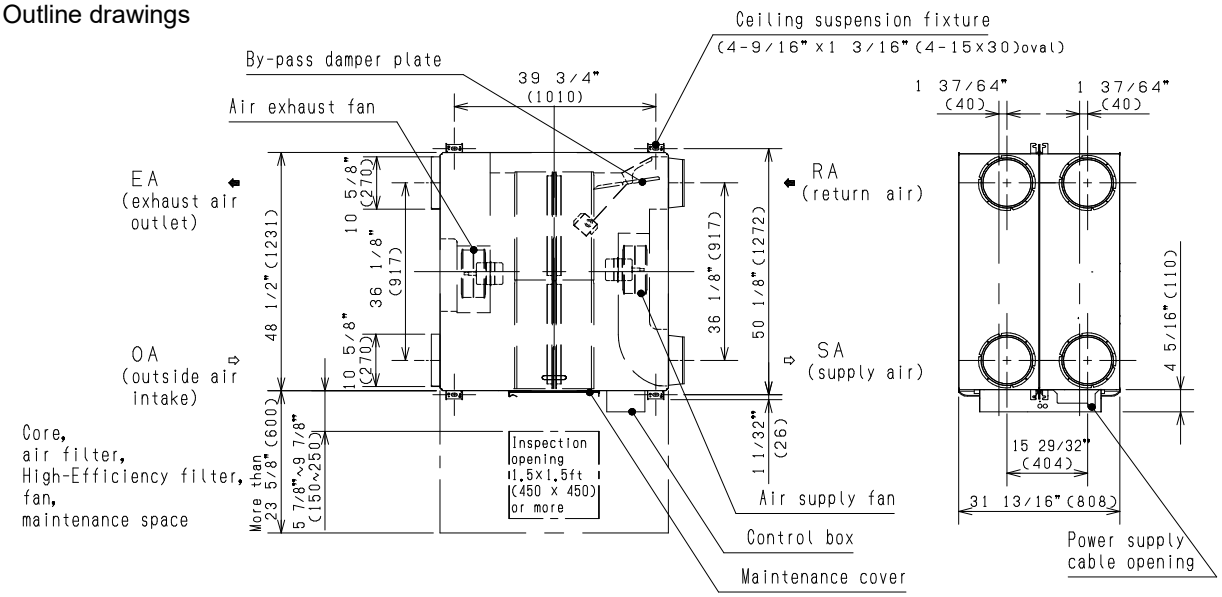

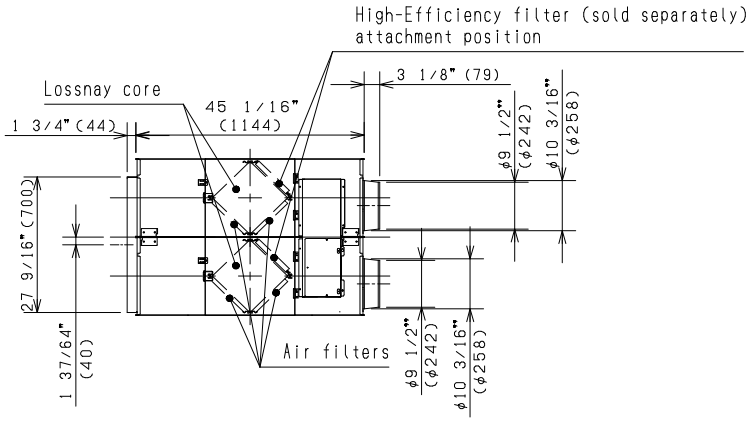

	UNIT	SCALE
	inch(mm)	N.T.S

■Attention

1. When using the product where exposed to high temperature and humidity (104° F(40℃) or higher, RH 80% or higher), or fog occurs frequently, moisture is likely to condense in the core. It may result in condensation build up in the unit. The product should not be used under such conditions.
2. Outdoor air may enter the Lossnay due to the pressure difference between indoor and outdoor or strong wind even when the product is not operated. In cold region or fog frequent area, it is recommended to install an electrically operated damper to block the outdoor air which may result in condensation on the surface or water collection in the unit.
3. When the OA inlet is located near a window or a street lamp, small insects are likely to be suctioned because they gather to the lighting.
4. In a cold weather area, or others, dewing or freezing could occur on the unit, the duct connection point, or other sections, depending on the conditions of outdoor air and indoor temperature and moisture, even if they are within the range of operating conditions. Make sure to confirm the operating conditions and other precautions, and do not use the product if dewing or freezing is anticipated.
5. The outside ducts must be tilted at a gradient (1/30 or more) down toward the outdoor louvers from Lossnay, and properly insulated. The entry of rain water may cause electric leakage, fire, or damage to household property.
6. The OA and EA ducts must be covered with heat-insulating material in order to prevent condensation from forming.
   If it is expected that the ambient temperature around the place where the Lossnay unit is installed will be high during the summer air conditioning season, it is recommended that the indoor ductwork be covered with insulation material.
7. Inspection opening (17 11/16"×17 11/16"(450×450mm) or more) must be installed on the maintenance cover side.
8. Before starting installation, be sure to fix ceiling suspension fixture with the attached screws according to the installation

※Specification may be subject to change without notice.

■Wiring diagrams

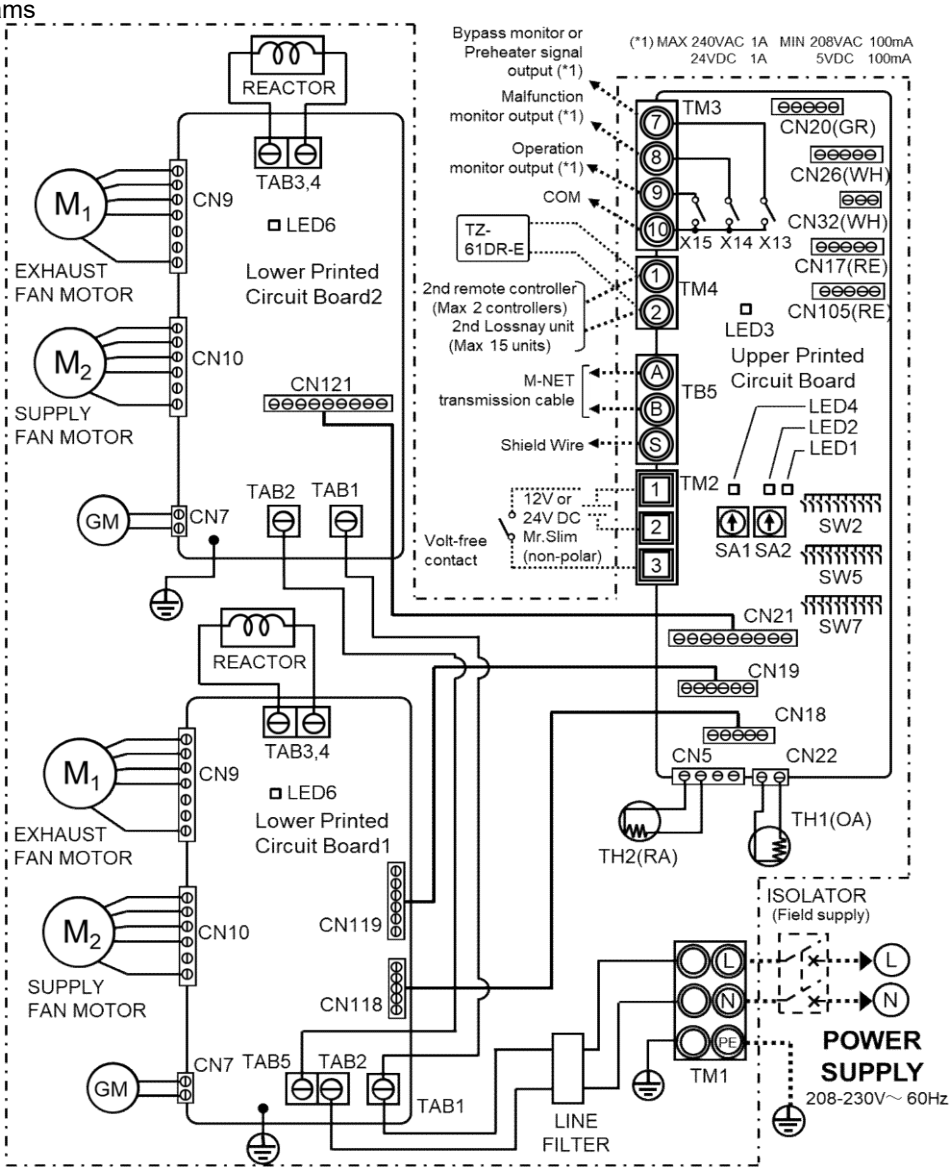

Definition of symbols		
M1: Motor for exhaust fan	X13: Relay contact	CN20: Unused
M2: Motor for supply fan	X14: Relay contact	CN21: Connector
GM: Motor for By-pass damper	X15: Relay contact	CN121: Connector
TH1: Thermistor for outside air	CN5: Connector (Thermistor RA)	CN22: Connector (Thermistor OA)
TH2: Thermistor for return air	CN7: Connector (Motor for By-pass damper)	CN26: Connector (By-pass, 0-10VDC Fan speed control)
SW2,5,7: Switch (Function selection)	CN9: Connector (Fan motor)	CN32: Connector (Remote control selection)
TM1: Terminal block (Power supply)	CN10: Connector (Fan motor)	CN105: Connector (IT communication)
TM2: Terminal block (External control input)	CN17: Connector (Fan speed 1/2/3/4)	SA1: Address setting rotary switch (10 digit)
TM3: Terminal block (Monitor output)	CN18: Connector	SA2: Address setting rotary switch (1 digit)
TM4: Terminal block (Transmission cable)	CN118: Connector	LED1 to LED3: Inspection indicator lamp
TB5: Terminal block (M-NET Transmission cable)	CN19: Connector	LED4,LED6: Power supply indicator lamp
TAB1,TAB2,(TAB5): Connector (Power supply)	CN119: Connector	SYMBOL ◎ ▢: Terminal block
TAB3,TAB4: Connector (Reactor)		◫ : Connector on PCB

■Attention

1. With this product, the wiring installation method will vary according to the design of the system.
2. Perform electrical installation to meet local electrical regulations.
3. Always use double insulated PVC cable for the transmission cables.
4. Wiring work must be performed by qualified professionals.
5. All supply circuits must be disconnected before obtaining access to the terminal devices.
6. Select proper circuit breaker according to the electrical current information in the chart below.

Model		TLGHF0300RVX01A	TLGHF0470RVX01A	TLGHF0600RVX01A	TLGHF1200RVX01A
Maximum current when operating [A]		2.05	3.10	3.45	6.40
Inrush current after power supply ON [A]	10ms	6.1			12.2
	100ms	3.6			7.2

※Specification may be subject to change without notice.

Lossnay model selection advices

1.Operating environment
Install this product in an environment where the temperature ranges from 14° F(-10℃) to 104° F(40℃) and the relative humidity is less than 80%RH. If condensation is expected to form, heat up the fresh outside air should be treated.

2.Do not use under high temperature and humidity condition
Condensation will occur and water will gather inside the Lossnay cores under high temperature and humidity condition, such as warm swimming pool, bathroom, greenhouse or foggy place.

3.Condition of outdoor, indoor and return air
Avoid using Lossnay under air condition with acid, alkalis, organic solvent , oil mist, paint, or harmful gas as pesticide, corrosive gas, etc.

4.By salt air, sulphur air or hot spring steam, rust, fire and/or malfunction may occur.
Install high quality filters inside outdoor air duct if the Lossnay operates in salt, sulphur or hot spring steam air conditions.

5.Entry of outdoor air during Lossnay stop
Outdoor air or mist may flow through the duct into indoor at windy and foggy area, even when Lossnay does not operate. To prevent the entry of outdoor air or fog, a damper is advised to be installed.

6.Entry of insects
When using the product in an environment where there is a window, or opening near the outdoor hood, so that insects are likely to gather around the interior or exterior light, and small insects may intrude into the Lossnay filters.

7.By-pass ventilation
In the case of “By-pass” ventilation, the supply air temperature slightly rises more than the outside air temperature because of heat exchange between duct inside and outside or heat from fan motor.

8.Usage of M-NET.
When solely using Lossnay units, power supply unit is required to connect to centralized control. Number of power supply units or the transmission boosters should correspond with the connected Lossnay units.

Caution for installation

1.Do not modify the unit. Do not install the unit vertically or inclined. They may cause malfunction.

2.Leaving sufficient space for maintenance purpose.

3.The location of the air inlet
Install air inlet to prevent intake of dirty air or bad smell from exhaust gas of factory, air from rubbish disposal, etc.

4.Take precautions like silencer for duct or additional insulation, when using the product in a quiet location.

5.Heat insulation foam for duct
Take care as below to prevent duct condensation.

①OA and EA ducts must be covered with heat-insulating material in order to prevent condensation.

② If it is expected that the ambient temperature around the place where the Lossnay unit is installed will be high during the summer air conditioning season, it is recommended that the indoor ductwork is covered with insulation material.

③Outdoor air may come into unit even when not in operation, by the pressure difference between indoor and outdoor or the
outdoor wind. In this case you should install a damper.

④Condensation and freezing may occur in the cold regions inside the unit because of the outdoor air condition or humidity condition above the ceiling. Make sure to install supplemental insulation foam.

⑤In the case that air condition around Lossnay unit is high temperature in summer or low temperature in winter, it is recommended to add heat insulation foam on SA and RA duct to prevent heat recovery decrease by heated or cooled during the duct.

6.Prevent entry of rainwater into Lossnay unit
Install weather louver or "Weather cover" for OA inlet & EA outlet to prevent rainwater entering the Lossnay unit. Ducts to outdoor (OA and EA) should decline by 1/30 or more.

7. Install the anchor bolts to ensure the product’s weight and earthquake load. Correctly rated wire/chain can be used for the earthquake load.

8. Do not install this product in a place where it is exposed to ultraviolet light. (UV may be damage covering insulation)

※Specification may be subject to change without notice.

9.Electrical Work

An isolator must be installed at the origins of mains power supply. Select the isolator which meets requirements from national and local regulations.
Use single flush box, to support remote controller.
Make sure to connect ground wiring.
When connecting external devices (electrically operated damper, lamp, monitoring unit, etc.) using output signals of the lossnay unit, make sure to install safety equipment for the external devices.
(It could cause fire, damage, etc. without safety equipment)

10.Duct heater

In the case of installing a duct heater interlocked with Lossnay, be sure to observe the following:

① Select a duct heater in compliance with local and national laws, ordinances, and standards.
Select a duct heater that has been certified by 3rd party.

② Always select a heater that is equipped with a non-self-resetting safety device.
Do not directly supply power from the Lossnay unit to the duct heater. Doing so could cause fire.

③ Install a circuit breaker for the duct heater in compliance with all applicable laws, ordinances, and standards.

④ Install the duct heater separated from the product by a distance of 2 m or more.
Failure to do so may result in equipment damage due to the transmission of residual heat from the heater.

⑤ When using a heater without a temperature control function, select a heater with a capacity that is matched to the air volume.

⑥ Do not use the heater outside the set air volume.
If the heater's capacity is too larger, this may result in the heater frequently turning ON/OFF.
If the heater's capacity is too small, this may result an inability to heat.

⑦ Ensure that the duct heater and Lossnay are wired and that the Lossnay function settings have been configured, and then always check operation by trial operation.

■Maintenance and lifetime

The parts listed below are service parts. It is necessary that regular check, regular replacement or replacement when they are broken. The expense for parts and replacement work is charged to customers.

- Motor
- Printed circuit board
- Lossnay core (Around 10 years with maintenance at stated periods.)
- Air filter (Around 5 years with maintenance at stated periods)

※Specification may be subject to change without notice.