MODEL: PAR-U01MEDU-K

Job Name:
System Reference: Date:

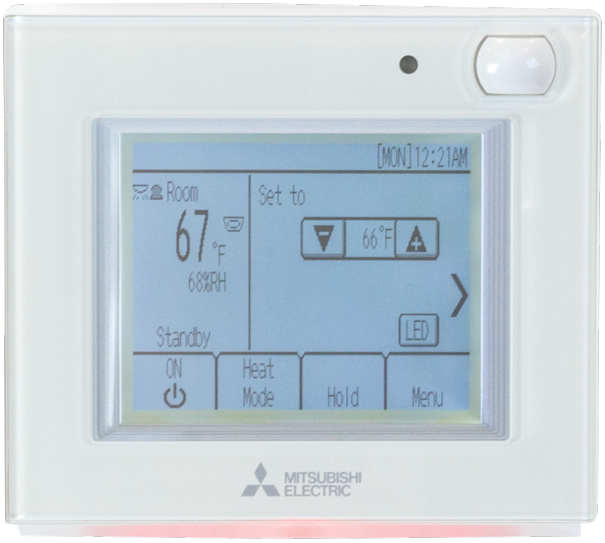

FEATURES:

- Language Options:
  - English, Spanish, French
- Controller Interface
  - Touch panel
  - Backlit LCD
  - Occupancy Sensor
    - Sensitivity level adjustable (-2 to +2)
    - Test mode for vacancy & occupancy
  - Brightness Sensor
    - Sensitivity level adjustable (0 to 100,000+ lux)
    - Test current luminance
  - Temperature Sensor
  - Humidity Sensor
  - LED indicator
- Energy-save control options with occupancy sensor, brightness sensor, and date & time:
  - On/Off
  - Setback mode
  - Set Temperature offset
    - Offset value = 2º F to 8º F
    - Auto-away time = 0:00 to 24:00 (hour: minute in 1-minute increments)
    - Detection Level: -2 to 2
  - Fan speed down
  - Thermo-off
  - Non-Use (Deactivates)
  - Override Energy-Save options
    - Brightness Sensor: Light or Dark
    - Date & Time: Weekly schedule
- LED Indicator adjustable options:
  - Different adjustable colors per operation mode
    - Optional 3 level color specific room temperature range
  - Blinks for error notification
  - Unique adjustable color during Energy-save
  - Off when unit is Off
  - Inverts the LED brightness (High/Low)
    - Occupancy is detected (Adjustable)
    - Touch panel is touched (Adjustable)
  - Brightness sensor changes LED Brightness:
    - Brighten, Darken, Off
- Disable LED Indicator entirely
- Basic Operations
  - On/Off
  - Operation Mode:
    - Heat, Cool, Drying, Fan, Auto (Dual and Single Set point), Setback
  - Set Temperature:
    - 40º F to 95º F (connected model dependent)
  - Fan Speed
  - Air Direction:
    - Auto, Step 1-5, Swing
  - Louver:
    - Off, Swing On
  - Interlocked LOSSNAY control: Off, Low, High
  - Hold Function:
    - Disable Schedule, On/Off timer, Auto-Off timer, Auto return
  - Humidity setpoint (Requires AHC)
- Date & time
  - Adjustable format
  - Daylight Savings
- Weekly Schedule
  - Time
  - On/Off
  - Operation Mode
  - Set Temperature
  - Home screen display icon
- On/Off Timer
  - Adjustable in 5-minute increments
  - Repeatable
  - Home screen display icon
- Auto-Off timer
  - Range of 30 to 240 minutes in 10-minute increments
  - Home screen display icon
- • Temperature unit selectable:
  - º F, º C (0.5 C increments)
  - º C (1º C increments)
- Room temperature display option: Show or Hide
- Backlight timeout adjustable:
  - 5, 10, 20 ,30, 60 seconds
- Sound level adjustable:
  - Level 0 to 3 (Level 0 = No sound)
- Display Contrast adjustable:
  - -10 to +10
- Touch panel calibration
- Permit or prohibit functions
  - On/Off
  - Operation mode
  - Set temperature
  - Air direction
- Set temperature range limit for operating modes:
  - Auto (Single setpoint)
  - Cool, Dry, Auto-Cool (Dual setpoint)
  - Heat, Auto-Heat (Dual setpoint)
  - Home screen icon notification
- Auto return function
  - Range of 10 to 120 minutes in 10-minute increments
- Filter maintenance notification
- Error code notification

R32 & R454B COMPATIBILITY NOTES:

- MXZ-SM (R454B): Compatible
- Y-Series (R32): Compatible
  - PAR-U01MEDU-K controllers cannot be used on indoor units that have Shut-off Valve Kits (SVK) installed.
- R2 Series (R32): Compatible with exceptions
  - Max of 40 PAR-U01MEDU-K main controller and sub controllers.
  - The PAR-U01MEDU-K can only control one indoor unit at a time.
  - Groups using PAR-U01MEDU-K must be single indoor units.

Specifications are subject to change without notice.

© 2019 Mitsubishi Electric Trane HVAC US LLC. All rights reserved.

MODEL: PAR-U01MEDU-K - SPECIFICATIONS, SYSTEM AND SENSOR DIAGRAMS

Power source		17–32 VDC *1 (for connection to M-NET only)	Receives power from outdoor units via the M-NET transmission cable. The power consumption coefficient*2 of the Smart ME Controller is “0.5”.
Operating conditions	Temperature	Operating temperature range	0º C to +40º C (+32º F – +104º F)
		Storage temperature range	-20º C to +60º C (-4º F – +140º F)
	Humidity	20% to 90% RH (Non-condensing)	
Net weight	Lbs. (kg)	0.3 kg (11/16 lbs)	
Product size (W x H x D)	In. (mm)	5-17/32 x 4-3/4 Z<4-27/32> x 1 <1-5/32> (140 x 120 <123> x 25 <28.8>) * The numbers in the <> indicate the dimensions including the protruding parts.	

*1 Not for use with a generic DC power supply device.

*2 “Power consumption coefficient” is a coefficient to calculate the relative power consumption of the devices that receive power through the M-NET transmission cable.

Refer to section 4 “System diagram” in Chapter 1 in the Installation Manual.

SYSTEM DIGRAMS:

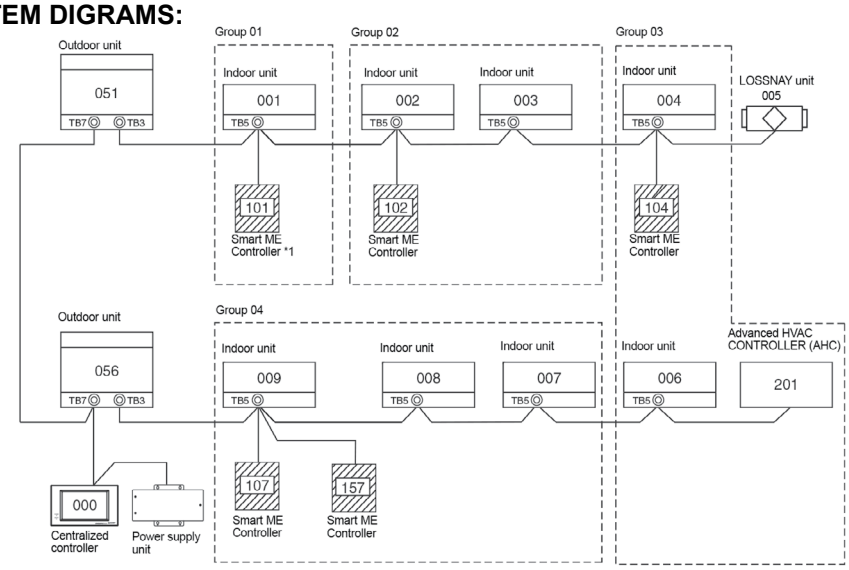

- Can control up to 16 indoor units in one group
  - The ME and MA remote contoller cannot be connected in the same group
- Up to two remote contorllers (main and sub) can be connected to an indoor unit or a group of indoor units
- Connect to TB5 on any indoor unit in same M-NET system
- Remote contoller cable (0.3 mm² (AWG 22) 2-core sheathed cable)
  - If remote controller cable exveeds 10 m (32 ft), use AWG 16

SENSOR DIAGRAMS:

Occupancy sensor

Horizontal direction

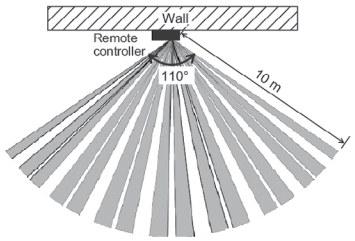

Figure 1

Vertical direction

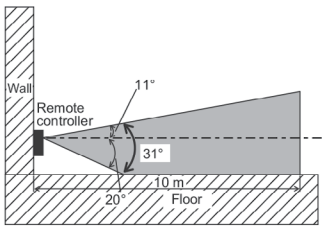

Figure 2

Brightness sensor

Horizontal direction

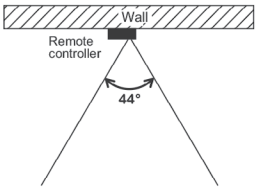

Figure 3

Vertical direction

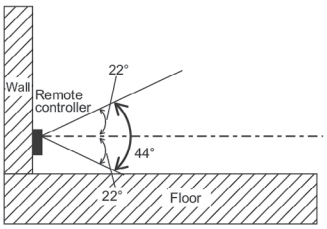

Figure 4

© 2019 Mitsubishi Electric Trane HVAC US LLC. All rights reserved.

MODEL: PAR-U01MEDU-K - ADVANCED HVAC COMPATIBILITY

NETWORK LAYOUT:

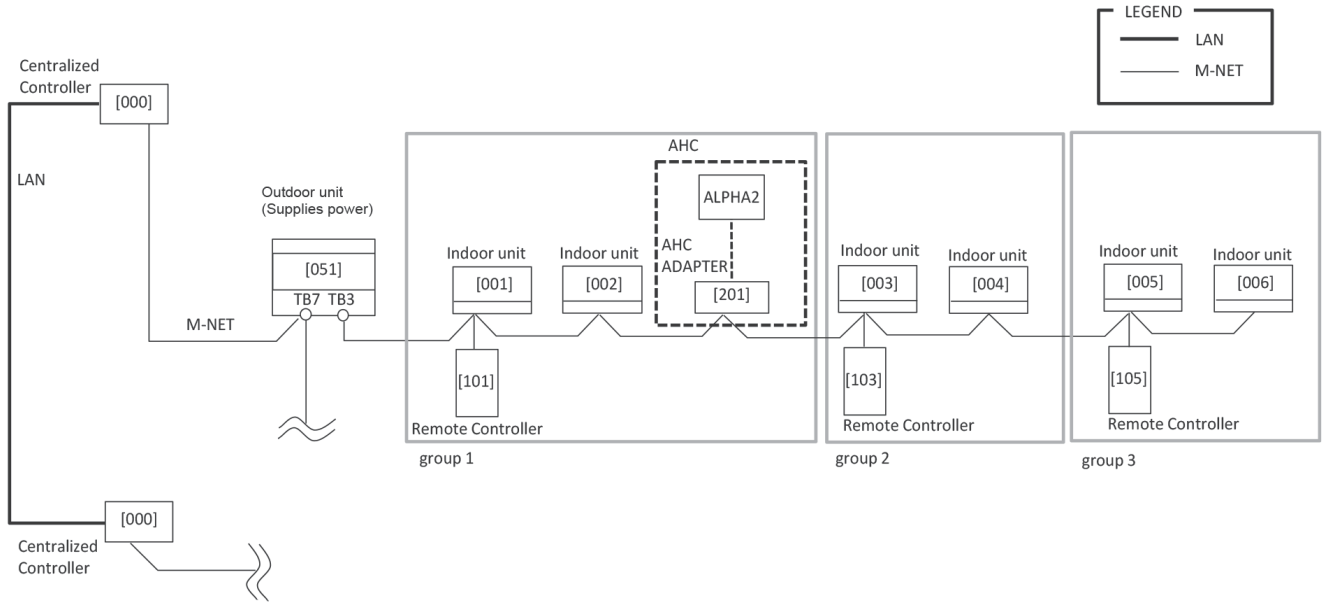

The Advanced HVAC CONTROLLER (AHC) consists of AHC ADAPTER (PAC-IF01AHC-J) and α2 SIMPLE APPLICATION CONTROLLER (ALPHA2). ALPHA2 is one type of programmable logic controller manufactured by Mitsubishi Electric Corporation.
AHC allows complex interlocked control with other manufacturer" external devices.
AHC has the following four functions:

- Function 1 Controls external devices based on information from external devices.
- Function 2 Controls M-NET devices based on information from external devices.
- Function 3 Controls M-NET devices based on information from M-NET devices.
- Function 4 Controls external devices based on information from M-NET devices.

The SMART ME can display the status of external devices on the remote controller or centralized controller.

- Remote Controller requires AHC: PAR-U01MEDU-K (Smart ME Remote controller)

SMART ME WITH AHC: GENERAL EQUIPMENT MONITORING

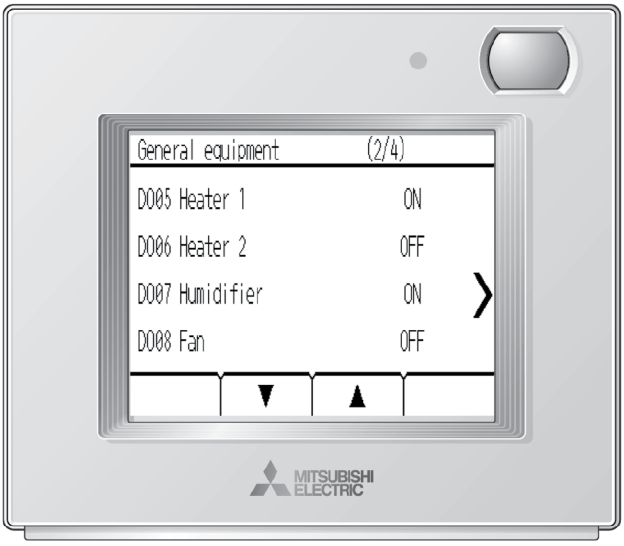

SMART ME WITH AHC: HUMIDITY CONTROL APPLICATION

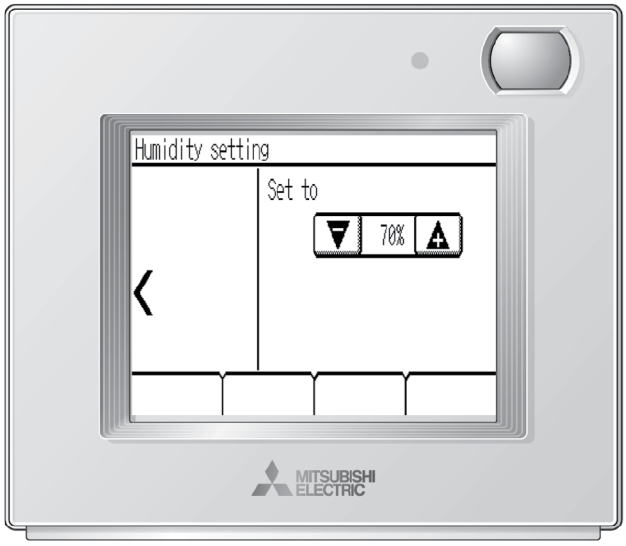

© 2019 Mitsubishi Electric Trane HVAC US LLC. All rights reserved.

MODEL: PAR-U01MEDU-K - DIMENSIONS

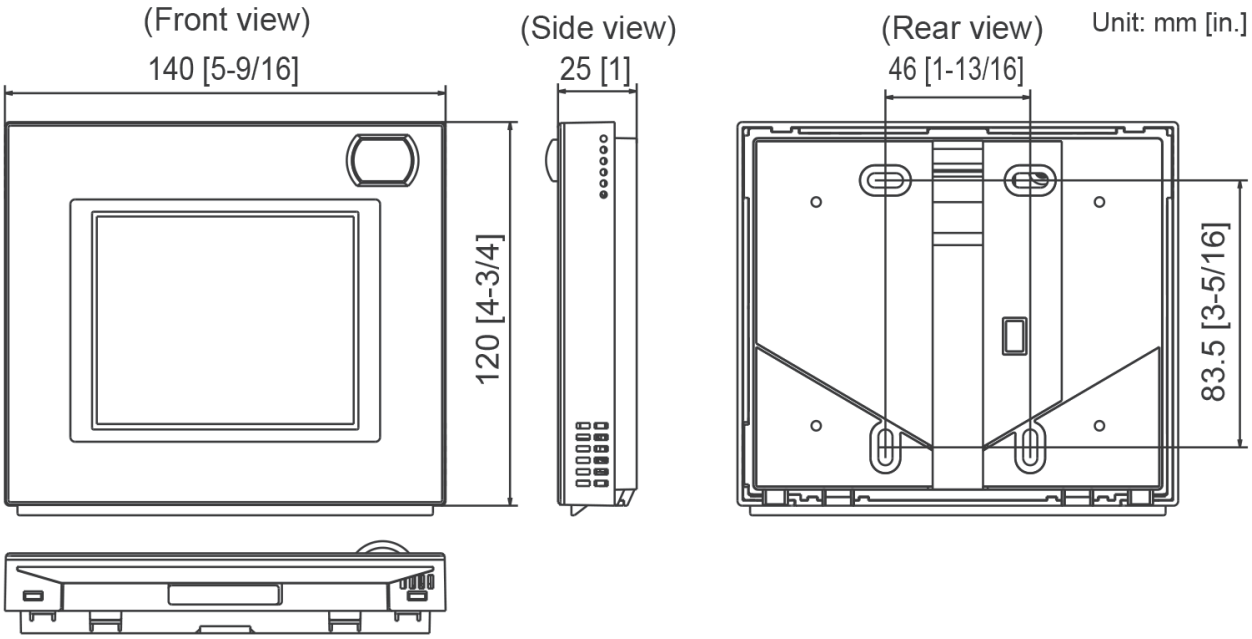

NOTES:

MITSUBISHI ELECTRIC
COOLING & HEATING
1340 Satellite Boulevard. Suwanee, GA 30024
Toll Free: 800-433-4822 www.mehvac.com

Specifications are subject to change without notice.
© 2019 Mitsubishi Electric Trane HVAC US LLC. All rights reserved.