# SLZ-KF12NA1 & SUZ-KA12NAHZ
## 12,000 BTU/H 2' X 2' 4-WAY CEILING CASSETTE
## 12,000 BTU/H HYPER-HEATING UNIVERSAL OUTDOOR UNIT

Job Name:

System Reference: Date:

Indoor Unit ..... SLZ-KF12NA1

Outdoor Unit ..... SUZ-KA12NAHZ

INDOOR UNIT FEATURES

- Ceiling-recessed cassette (24"x24") ductless heat pump
- Install Konnect Series in a drywalled ceiling (with an access panel for servicing) or in a 2'x2' drop ceiling
- Wide airflow pattern for excellent air distribution
- Optional 3D i-see Sensor®
- Fresh air intake provided in the main body
- Built-in drain condensate lift mechanism (lifts to 33")
- Multiple control options available:
  - kumo cloud® smart device app for remote access
  - Third-party interface options
  - Wired or wireless controllers
- Long-life air filter included
- Individual vane control

OUTDOOR UNIT FEATURES

- The outdoor unit powers the indoor unit, and should a power outage occur, the system is automatically restarted when power returns
- INVERTER-driven compressor and LEV provide high efficiency and comfort while using only the energy needed to maintain maximum performance
- H2i® hyper heat performance offers 100% heating capacity at 5° F
- Hot-Start Technology: no cold air rush at equipment startup or when restarting after Defrost Cycle
- Quiet operation
- Blue Fin anti-corrosion treatment applied to the outdoor unit heat exchanger for increased coil protection and longer life
- Built-in base pan heater
- Innovative Joint Lap DC Motor leads to high efficiency and reliability
- Pulse Amplitude Modulation technology

Specifications are subject to change without notice.

© 2023 Mitsubishi Electric Trane HVAC US LLC. All rights reserved.

# SPECIFICATIONS: SLZ-KF12NA1 & SUZ-KA12NAHZ

| | | | |
|---|---|---|---|
| Cooling at 95°F[1] | Maximum Capacity | BTU/H | 12,000 |
| | Rated Capacity | BTU/H | 12,000 |
| | Minimum Capacity | BTU/H | 5,070 |
| | Maximum Power Input | W | 940 |
| | Rated Power Input | W | 940 |
| | Moisture Removal | Pints/h | 3.1 |
| | Sensible Heat Factor | | 0.71 |
| | Power Factor [208V / 230V] | % | 98.0 / 98.0 |
| Heating at 47°F[2] | Maximum Capacity | BTU/H | 14,500 |
| | Rated Capacity | BTU/H | 13,800 |
| | Minimum Capacity | BTU/H | 7,800 |
| | Maximum Power Input | W | 1,300 |
| | Rated Power Input | W | 1,170 |
| | Power Factor [208V / 230V] | % | 98.0 / 98.0 |
| Heating at 17°F[3] | Maximum Capacity | BTU/H | 13,800 |
| | Rated Capacity | BTU/H | 8,300 |
| | Maximum Power Input | W | 1,700 |
| | Rated Power Input | W | 1,020 |
| Heating at 5°F[4] | Maximum Capacity | BTU/H | 13,800 |
| | Maximum Power Input | W | 2,600 |
| Efficiency | SEER \| SEER2 | | 20.3 \| 20.8 |
| | EER[1] \| EER2[1] | | 12.7 \| 12.7 |
| | HSPF [IV] \| HSPF2 [IV] | | 10.0 \| 9.0 |
| | COP at 47°F[2] | | 3.4 |
| | COP at 17°F at Maximum Capacity[3] | | 2.37 |
| | COP at 5°F at Maximum Capacity[4] | | 1.83 |
| Electrical | Voltage, Phase, Frequency | | 208/230, 1, 60 |
| | Guaranteed Voltage Range | V AC | 187 - 253 |
| | Voltage: Indoor - Outdoor, S1-S2 | V AC | 208/230 |
| | Voltage: Indoor - Outdoor, S2-S3 | V DC | 24 |
| | Short-circuit Current Rating [SCCR] | kA | 5 |
| | Recommended Fuse/Breaker Size (Oudoor) | A | 15 |
| | Recommended Wire Size [Indoor - Outdoor] | AWG | 14 |
| | Power Supply | | Indoor unit is powered by the outdoor unit |
| Indoor Unit | MCA | A | 1 |
| | Fan Motor Full Load Amperage | A | 0.29 |
| | Fan Motor Type | | DC Motor |
| | Airflow Rate at Cooling, Dry | CFM | 230–265–335 |
| | Airflow Rate at Cooling, Wet | CFM | 207–252–302 |
| | Airflow Rate at Heating, Dry | CFM | 230–265–335 |
| | Sound Pressure Level [Cooling] | dB[A] | 25–30–34 |
| | Sound Pressure Level [Heating] | dB[A] | 25–30–34 |
| | Drain Pipe Size | In. [mm] | 1-1/4 [32] |
| | Condensate Lift Mechanism, Maximum Distance | In. [mm] | 33 [850] |
| | Coating on Heat Exchanger | | — |
| | External Finish Color | | Munsell 1.0Y 9.2/0.0 |
| | Unit Dimensions | W x D x H: In. [mm] | 22-7/16 x 22-7/16 x 9-21/32 [570 x 570 x 245] |
| | Package Dimensions | W x D x H: In. [mm] | 24-13/32 x 27-15/16 x 9-7/16 [620 x 710 x 240] |
| | Unit Weight | Lbs. [kg] | 31 [13.9] |
| | Package Weight | Lbs. [kg] | 37 [17] |
| Indoor Unit Operating Temperature Range | Cooling Intake Air Temp [Maximum / Minimum]* | °F | 95 DB, 71 WB / 67 DB , 57 WB |
| | Heating Intake Air Temp [Maximum / Minimum] | °F | 80 DB / 70 DB |

NOTES:

| | | | |
|---|---|---|---|
| AHRI Rated Conditions (Rated data is determined at a fixed compressor speed) | [1]Cooling (Indoor // Outdoor) | °F | 80 DB, 67 WB // 95 DB, 75 WB |
| | [2]Heating at 47°F (Indoor // Outdoor) | °F | 70 DB, 60 WB // 47 DB, 43 WB |
| | [3]Heating at 17°F (Indoor // Outdoor) | °F | 70 DB, 60 WB // 17 DB, 15 WB |
| Conditions | [4]Heating at 5°F (Indoor // Outdoor) | °F | 70 DB, 60 WB // 5 DB, 4 WB |

*Indoor/Outdoor Unit Operating Temperature Range (Cooling Air Temp [Maximum / Minimum]):
- Applications should be restricted to comfort cooling only; equipment cooling applications are not recommended for low ambient temperature conditions.

**Outdoor Unit Operating Temperature Range (Cooling Thermal Lock-out / Re-start Temperatures; Heating Thermal Lock-out / Re-start Temperatures):
- System cuts out in heating mode to avoid thermistor error and automatically restarts at these temperatures.

Specifications are subject to change without notice.

© 2023 Mitsubishi Electric Trane HVAC US LLC. All rights reserved.

# SPECIFICATIONS: SLZ-KF12NA1 & SUZ-KA12NAHZ

| | | | |
|---|---|---|---|
| Outdoor Unit | MCA | A | 14.0 |
| | MOCP | A | 24 |
| | Fan Motor Full Load Amperage | A | 0.7 |
| | Fan Motor Output | W | 77 |
| | Airflow Rate [Cooling / Heating] | CFM | 1,691 / 1,691 |
| | Refrigerant Control | | LEV |
| | Defrost Method | | Reverse Cycle |
| | Coating on Heat Exchanger | | Blue Fin Coating |
| | Sound Pressure Level, Cooling[1] | dB(A) | 54 |
| | Sound Pressure Level, Heating[2] | dB(A) | 55 |
| | Compressor Type | | DC INVERTER-driven Twin Rotary |
| | Compressor Model | | SNB130FHBM2T |
| | Compressor Rated Load Amps | A | 10 |
| | Compressor Locked Rotor Amps | A | 12.5 |
| | Compressor Oil [Type // Charge] | oz. | FV50S // 22 |
| | External Finish Color | | Ivory Munsell 3Y 7.8/1.1 |
| | Base Pan Heater | | Built-in |
| | Unit Dimensions | W x D x H: In. [mm] | 33-1/16 x 13 x 34-5/8 [840 x 330 x 880] |
| | Package Dimensions | W x D x H: In. [mm] | 38-3/4 x 16-3/4 x 39 [980 x 420 x 990] |
| | Unit Weight | Lbs. [kg] | 129 [58.5] |
| | Package Weight | Lbs. [kg] | 148 [67] |
| Outdoor Unit Operating Temperature Range | Cooling Air Temp [Maximum / Minimum]* | °F | 115 DB / 14 DB |
| | Cooling Thermal Lock-out / Re-start Temperatures** | °F | -1 / 3 |
| | Heating Air Temp [Maximum / Minimum] | °F | 75 DB, 65 WB / -13 DB, -14 WB |
| | Heating Thermal Lock-out / Re-start Temperatures** | °F | -25 / -14 |
| Refrigerant | Type | | R410A |
| | Pre-Charged Refrigerant Amount | Lbs, oz | 3.0, 9.0 |
| | Maximum Pre-Charged Piping Length | Ft. [m] | 65.0 [20.0] |
| | Additional Refrigerant Charge Per Additional Piping Length | oz./Ft. [g/m] | 0 [0] |
| Piping | Gas Pipe Size O.D. [Flared] | In.[mm] | 3/8 [9.52] |
| | Liquid Pipe Size O.D. [Flared] | In.[mm] | 1/4 [6.35] |
| | Maximum Piping Length | Ft. [m] | 65 [20] |
| | Maximum Height Difference | Ft. [m] | 40 [12] |
| | Maximum Number of Bends | | 10 |

NOTES:

| | | | |
|---|---|---|---|
| AHRI Rated Conditions (Rated data is determined at a fixed compressor speed) | [1]Cooling (Indoor // Outdoor) | °F | 80 DB, 67 WB // 95 DB, 75 WB |
| | [2]Heating at 47°F (Indoor // Outdoor) | °F | 70 DB, 60 WB // 47 DB, 43 WB |
| | [3]Heating at 17°F (Indoor // Outdoor) | °F | 70 DB, 60 WB // 17 DB, 15 WB |
| Conditions | [4]Heating at 5°F (Indoor // Outdoor) | °F | 70 DB, 60 WB // 5 DB, 4 WB |

*Indoor/Outdoor Unit Operating Temperature Range (Cooling Air Temp [Maximum / Minimum]):
- Applications should be restricted to comfort cooling only; equipment cooling applications are not recommended for low ambient temperature conditions.

**Outdoor Unit Operating Temperature Range (Cooling Thermal Lock-out / Re-start Temperatures; Heating Thermal Lock-out / Re-start Temperatures):
- System cuts out in heating mode to avoid thermistor error and automatically restarts at these temperatures.

Specifications are subject to change without notice.

© 2023 Mitsubishi Electric Trane HVAC US LLC. All rights reserved.

# INDOOR UNIT ACCESSORIES: SLZ-KF12NA1

| | | |
|---|---|---|
| Control Interface | 3-Pin Connector | ☐ PAC-715AD |
| | Airzone ZBS Wired Blueface Principal Controller White | ☐ AZZBSBLUEFACECB |
| | Airzone ZBS Wired Blueface Principal Controller White | ☐ AZZBSBLUEZEROCB |
| | Airzone ZBS Wired Lite Controller White | ☐ AZZBSLITECB |
| | Airzone ZBS Wireless Lite Controller White | ☐ AZZBSLITERB |
| | Airzone ZBS Wireless Think Controller White | ☐ AZZBSTHINKRB |
| | BACnet® and Modbus® Interface | ☐ PAC-UKPRC001-CN-1 |
| | CN24 Relay Kit | ☐ CN24RELAY-KIT-CM3 |
| | Connector and wire for Operation status/error using CN51 | ☐ PAC-725AD |
| | Connector cable for remote display | ☐ PAC-SA88HA-EP |
| | IT Extender | ☐ PAC-WHS01IE-E |
| | kumo station® for kumo cloud® | ☐ PAC-WHS01HC-E |
| | Remote Operation Adapter‡ | ☐ PAC-SF40RM-E |
| | Thermostat Interface | ☐ PAC-US444CN-1 |
| | Thermostat Interface | ☐ PAC-US445CN-1 |
| | USNAP Adapter | ☐ PAC-WHS01UP-E |
| | Wireless Interface for kumo cloud® | ☐ PAC-USWHS002-WF-2 |
| Remote Sensor | Flush Mount Remote Temperature Sensor | ☐ PAC-USSEN002-FM-1 |
| | Flush Mount Temperature Sensor | ☐ PAC-USSEN001-FM-1 |
| | Remote Temperature Sensor | ☐ PAC-SE41TS-E |
| | Wireless temperature and humitity sensor for kumo cloud® | ☐ PAC-USWHS003-TH-1 |
| Wired Remote Controller | Deluxe Wired MA Remote Controller† | ☐ PAR-40MAAU |
| | Simple Ductless Wired Remote Controller | ☐ PAC-SDW01RC-1 |
| | Simple MA Remote Controller† | ☐ PAC-YT53CRAU-J |
| | Touch MA Controller† | ☐ PAR-CT01MAU-SB |
| Wireless Remote Controller | kumo touch™ RedLINK™ Wireless Controller | ☐ MHK2 |
| | Wireless MA Receiver | ☐ PAR-FA32MA-W |
| | Wireless MA Remote Controller | ☐ PAR-FL32MA-E |
| | Wireless Receiver | ☐ PAR-SF9FA-E |
| | Wireless Remote Contoller | ☐ PAR-SL101A-E |
| Condensate | Blue Diamond (Advanced) Mini Condensate Pump w/ Reservoir & Sensor (208/230V) [recommended] | ☐ X87-721 |
| | Blue Diamond (MicroBlue) Mini Condensate Pump (110/208/230V) up to 18,000 BTU/H | ☐ X86-003 |
| | Refco Condensate Pump (100-240 VAC) up to 120,000 BTU/H | ☐ COMBI |
| Disconnect Switch | (30A/600V/UL) [fits 2” X 4” utility box] - Black | ☐ TAZ-MS303 |
| Lineset | 15’ x 1/4” x 15’ / 3/8” Lineset (Twin-Tube Insulation) | ☐ MLS143812T-15 |
| | 30’ x 1/4” x 30’ / 3/8” Lineset (Twin-Tube Insulation) | ☐ MLS143812T-30 |
| | 50’ x 1/4” x 50’ / 3/8” Lineset (Twin-Tube Insulation) | ☐ MLS143812T-50 |
| | 65’ x 1/4” x 65’ / 3/8” Lineset (Twin-Tube Insulation) | ☐ MLS143812T-65 |

NOTES:
‡PAC-SF40RM-E (Unable to use with wireless remote controller)


© 2023 Mitsubishi Electric Trane HVAC US LLC. All rights reserved.

# OUTDOOR UNIT ACCESSORIES: SUZ-KA12NAHZ

| | | |
|---|---|---|
| Air Outlet Guide | Air Outlet Guide | ☐ MAC-886SG-E |
| Control/Service Tool | M- & P-Series Maintenance Tool Cable Set | ☐ M21EC0397 |
| Mini-Split Wire | 14 Gauge, 4 wire MiniSplit Cable—250 ft. roll | ☐ S144-250 |
| | 14 Gauge, 4 wire MiniSplit Cable—250 ft. roll | ☐ SW144-250 |
| | 14 Gauge, 4 wire MiniSplit Cable—50 ft. roll | ☐ S144-50 |
| | 14 Gauge, 4 wire MiniSplit Cable—50 ft. roll | ☐ SW144-50 |
| | 16 Gauge, 4 wire MiniSplit Cable—250 ft. roll | ☐ S164-250 |
| | 16 Gauge, 4 wire MiniSplit Cable—250 ft. roll | ☐ SW164-250 |
| | 16 Gauge, 4 wire MiniSplit Cable—50 ft. roll | ☐ S164-50 |
| | 16 Gauge, 4 wire MiniSplit Cable—50 ft. roll | ☐ SW164-50 |
| Mounting Pad | Condensing Unit Mounting Pad: 16” x 36” x 3” | ☐ ULTRILITE1 |
| Port Adaptor | Adaptor: 1/2” x 3/8” (required) | ☑ MAC-A455JP-E |
| Stand | 18” Single Fan Stand | ☐ QSMS1801M |
| | 24” Single Fan Stand | ☐ QSMS2401M |
| | Condenser Wall Bracket | ☐ QSWB2000M-1 |
| | Outdoor Unit Stand — 12” High | ☐ QSMS1201M |


© 2023 Mitsubishi Electric Trane HVAC US LLC. All rights reserved.

# INDOOR UNIT DIMENSIONS: SLZ-KF12NA1

**Unit: inch (mm)**

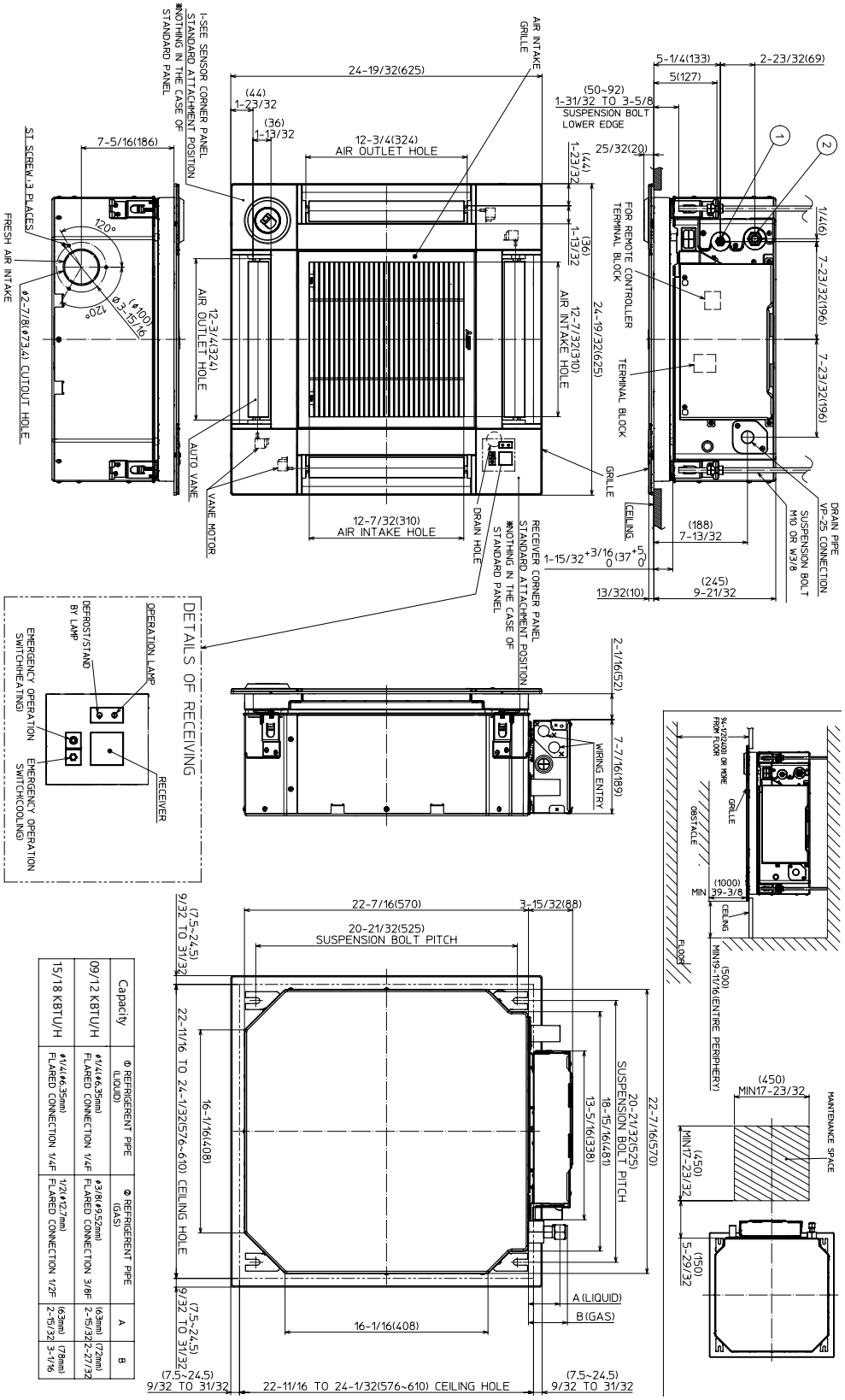


| Capacity | Φ REFRIGERENT PIPE (LIQUID) | Φ REFRIGERENT PIPE (GAS) | A | B |
|---|---|---|---|---|
| 09/12 KBTU/H | φ1/4(φ6.35mm) FLARED CONNECTION 1/4F | φ3/8(φ9.52mm) FLARED CONNECTION 3/8F | (63mm) 2-15/32 | (72mm) 2-27/32 |
| 15/18 KBTU/H | φ1/4(φ6.35mm) FLARED CONNECTION 1/4F | 1/2(φ12.7mm) FLARED CONNECTION 1/2F | (63mm) 2-15/32 | (78mm) 3-1/16 |

Specifications are subject to change without notice.

© 2023 Mitsubishi Electric Trane HVAC US LLC. All rights reserved.

# OUTDOOR UNIT DIMENSIONS: SUZ-KA12NAHZ

**Unit: inch**

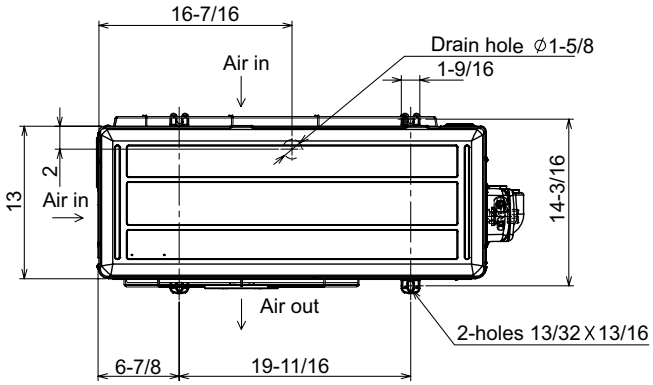


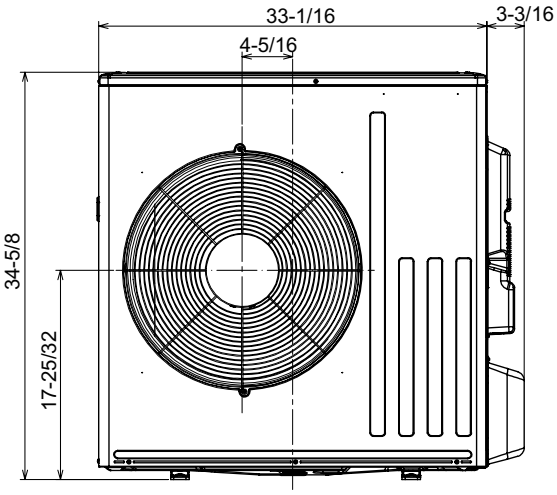


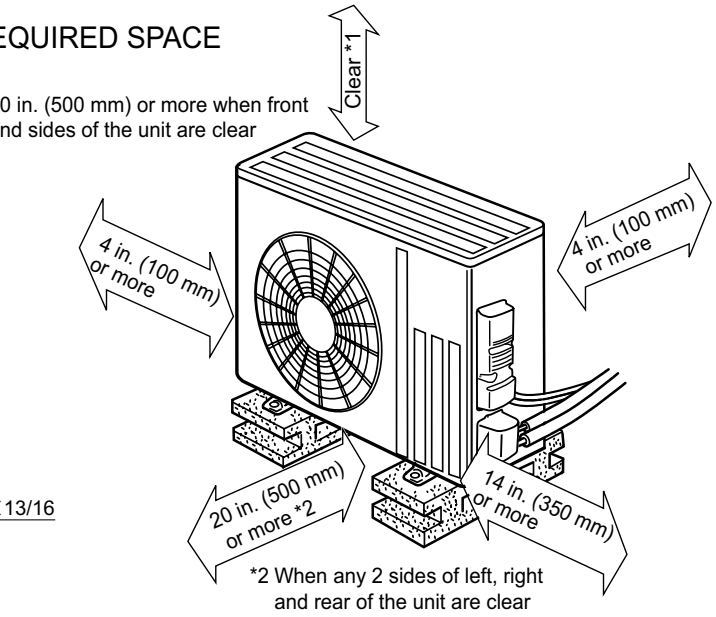


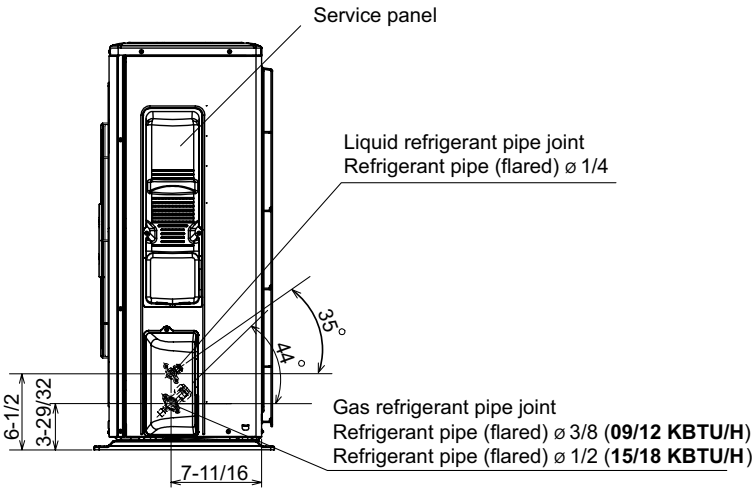


1340 Satellite Boulevard Suwanee, GA 30024
Toll Free: 800-433-4822 www.mehvac.com

FORM# SLZ-KF12NA1 & SUZ-KA12NAHZ - 202304

Specifications are subject to change without notice.

© 2023 Mitsubishi Electric Trane HVAC US LLC. All rights reserved.