SEZ-KD09NA4R1 & SUZ-KA09NAHZ
9,000 BTU/H LOW STATIC HORIZONTAL-DUCTED INDOOR UNIT
9,000 BTU/H HYPER-HEATING UNIVERSAL OUTDOOR UNIT

Job Name:	
System Reference:	Date:

Indoor Unit SEZ-KD09NA4R1

Outdoor Unit SUZ-KA09NAHZ

INDOOR UNIT FEATURES

- Concealed horizontal-ducted unit for applications with short duct runs
- Quiet operation
- Ultra-thin body: 7-7/8” high
- Fresh air intake provided in the main body
- Built-in drain condensate lift mechanism
- Multiple control options available:
  - kumo cloud® smart device app for remote access
  - Third-party interface options
  - Wired or wireless controllers

OUTDOOR UNIT FEATURES

- The outdoor unit powers the indoor unit, and should a power outage occur, the system is automatically restarted when power returns
- INVERTER-driven compressor and LEV provide high efficiency and comfort while using only the energy needed to maintain maximum performance
- H2i® hyper heat performance offers 100% heating capacity at 5° F
- Hot-Start Technology: no cold air rush at equipment startup or when restarting after Defrost Cycle
- Quiet operation
- Blue Fin anti-corrosion treatment applied to the outdoor unit heat exchanger for increased coil protection and longer life
- Built-in base pan heater
- Innovative Joint Lap DC Motor leads to high efficiency and reliability
- Pulse Amplitude Modulation technology

Specifications are subject to change without notice.

© 2024 Mitsubishi Electric Trane HVAC US LLC. All rights reserved.

SPECIFICATIONS: SEZ-KD09NA4R1 & SUZ-KA09NAHZ

Cooling at 95°F[1]	Maximum Capacity	BTU/H	9,000
	Rated Capacity	BTU/H	9,000
	Minimum Capacity	BTU/H	4,500
	Maximum Power Input	W	690
	Rated Power Input	W	690
	Moisture Removal	Pints/h	1.7
	Sensible Heat Factor		0.79
	Power Factor [208V / 230V]	%	89.0 / 89.0
Heating at 47°F[2]	Maximum Capacity	BTU/H	13,300
	Rated Capacity	BTU/H	12,500
	Minimum Capacity	BTU/H	8,100
	Maximum Power Input	W	1,300
	Rated Power Input	W	1,300
	Power Factor [208V / 230V]	%	95.0 / 95.0
Heating at 17°F[3]	Maximum Capacity	BTU/H	12,500
	Rated Capacity	BTU/H	8,700
	Maximum Power Input	W	1,670
	Rated Power Input	W	1,120
Heating at 5°F[4]	Maximum Capacity	BTU/H	12,500
	Maximum Power Input	W	2,300
Efficiency	SEER2		—
	EER2[1]		—
	HSPF2 [IV]		—
	COP at 47°F[2]		2.8
	COP at 17°F at Maximum Capacity[3]		2.15
	COP at 5°F at Maximum Capacity[4]		1.59
	ENERGY STAR® Certified		No
Electrical	Voltage, Phase, Frequency		208/230, 1, 60
	Guaranteed Voltage Range	V AC	187 - 253
	Voltage: Indoor - Outdoor, S1-S2	V AC	208/230
	Voltage: Indoor - Outdoor, S2-S3	V DC	24
	Short-circuit Current Rating [SCCR]	kA	5
	Recommended Fuse/Breaker Size (Outdoor)	A	15
	Recommended Wire Size [Indoor - Outdoor]	AWG	14
	Power Supply		Indoor unit is powered by the outdoor unit
Indoor Unit	MCA	A	1.0
	Fan Motor Full Load Amperage	A	0.51
	Fan Motor Type		DC Motor
	Airflow Rate at Cooling, Dry	CFM	194–247–317
	Airflow Rate at Cooling, Wet	CFM	–174–222–285
	Airflow Rate at Heating, Dry	CFM	194–247–317
	Sound Pressure Level [Cooling]	dB[A]	23–26–30
	Sound Pressure Level [Heating]	dB[A]	23–26–30
	External Static Pressure	in.WG	0.02–0.06–0.14–0.2
	Drain Pipe Size	In. [mm]	1-1/4 [32]
	Condensate Lift Mechanism, Maximum Distance	In. [mm]	2,121/32 [550]
	Coating on Heat Exchanger		—
	External Finish Color		Galvanized
	Unit Dimensions	W x D x H: In. [mm]	31-1/8 x 27-9/16 x 7-7/8 [790 x 700 x 200]
	Package Dimensions	W x D x H: In. [mm]	39-9/8 x 35-7/16 x 14-3/16 [1,000 x 900 x 360]
	Unit Weight	Lbs. [kg]	42 [19.0]
	Package Weight	Lbs. [kg]	64 [29]
Indoor Unit Operating Temperature Range	Cooling Intake Air Temp [Maximum / Minimum]*	°F	90 DB, 72 WB / 68 DB, 61 WB
	Heating Intake Air Temp [Maximum / Minimum]	°F	77 DB / 59 DB

NOTES:

AHRI Rated Conditions (Rated data is determined at a fixed compressor speed)	[1]Cooling (Indoor // Outdoor)	°F	80 DB, 67 WB // 95 DB, 75 WB
	[2]Heating at 47°F (Indoor // Outdoor)	°F	70 DB, 60 WB // 47 DB, 43 WB
	[3]Heating at 17°F (Indoor // Outdoor)	°F	70 DB, 60 WB // 17 DB, 15 WB
Conditions	[4]Heating at 5°F (Indoor // Outdoor)	°F	70 DB, 60 WB // 5 DB, 4 WB

*Indoor/Outdoor Unit Operating Temperature Range (Cooling Air Temp [Maximum / Minimum]):
- Applications should be restricted to comfort cooling only; equipment cooling applications are not recommended for low ambient temperature conditions.

**Outdoor Unit Operating Temperature Range (Cooling Thermal Lock-out / Re-start Temperatures; Heating Thermal Lock-out / Re-start Temperatures):
- System cuts out in heating mode to avoid thermistor error and automatically restarts at these temperatures.

© 2024 Mitsubishi Electric Trane HVAC US LLC. All rights reserved.

SPECIFICATIONS: SEZ-KD09NA4R1 & SUZ-KA09NAHZ

Outdoor Unit	MCA	A	14.0
	MOCP	A	24
	Fan Motor Output	W	77
	Airflow Rate [Cooling / Heating]	CFM	1691 / 1691
	Refrigerant Control		Linear expansive valve
	Defrost Method		Reverse Cycle
	Coating on Heat Exchanger		Blue Fin Coating
	Sound Pressure Level, Cooling[1]	dB(A)	54
	Sound Pressure Level, Heating[2]	dB(A)	50
	Compressor Type		DC INVERTER-driven Twin Rotary
	Compressor Model		SNB130FHBM2T
	Compressor Oil [Type // Charge]	oz.	FV50S
	External Finish Color		Ivory Munsell 3Y 7.8/1.1
	Base Pan Heater		Built-in
	Unit Dimensions	W x D x H: In. [mm]	31-1/2 x 13 x 34-5/8 [840 x 330 x 880]
	Package Dimensions	W x D x H: In. [mm]	38-9/16 x 16-9/16 x 39 [980 x 420 x 990]
	Unit Weight	Lbs. [kg]	129 [58.5]
	Package Weight	Lbs. [kg]	148 [67]
Outdoor Unit Operating Temperature Range	Cooling Air Temp [Maximum / Minimum]*	°F	115 DB / 14 DB
	Cooling Thermal Lock-out / Re-start Temperatures**	°F	-1 / 3
	Heating Air Temp [Maximum / Minimum]	°F	75 DB, 65 WB / -13 DB, -14 WB
	Heating Thermal Lock-out / Re-start Temperatures**	°F	-25 / -14
Refrigerant	Type		R410A
	Pre-Charged Refrigerant Amount	Lbs, oz	3.0, 9.0
	Maximum Pre-Charged Piping Length	Ft. [m]	65.0 [20.0]
	Additional Refrigerant Charge Per Additional Piping Length	oz./Ft. [g/m]	0 [0]
Piping	Gas Pipe Size O.D. [Flared]	In.[mm]	3/8 [9.52]
	Liquid Pipe Size O.D. [Flared]	In.[mm]	1/4 [6.35]
	Maximum Piping Length	Ft. [m]	65 [20]
	Maximum Number of Bends		10

NOTES:

AHRI Rated Conditions (Rated data is determined at a fixed compressor speed)	[1]Cooling (Indoor // Outdoor)	°F	80 DB, 67 WB // 95 DB, 75 WB
	[2]Heating at 47°F (Indoor // Outdoor)	°F	70 DB, 60 WB // 47 DB, 43 WB
	[3]Heating at 17°F (Indoor // Outdoor)	°F	70 DB, 60 WB // 17 DB, 15 WB
Conditions	[4]Heating at 5°F (Indoor // Outdoor)	°F	70 DB, 60 WB // 5 DB, 4 WB

*Indoor/Outdoor Unit Operating Temperature Range (Cooling Air Temp [Maximum / Minimum]):
- Applications should be restricted to comfort cooling only; equipment cooling applications are not recommended for low ambient temperature conditions.

**Outdoor Unit Operating Temperature Range (Cooling Thermal Lock-out / Re-start Temperatures; Heating Thermal Lock-out / Re-start Temperatures):
- System cuts out in heating mode to avoid thermistor error and automatically restarts at these temperatures.

Specifications are subject to change without notice.

© 2024 Mitsubishi Electric Trane HVAC US LLC. All rights reserved.

INDOOR UNIT ACCESSORIES: SEZ-KD09NA4R1

Control Interface	Airzone Wired Blueface Controller (White)	☐ AZZBSBLUEZEROCB
	Airzone Wired Lite Controller (White)	☐ AZZBSLITECB
	Airzone Wireless Lite Controller (White)	☐ AZZBSLITERB
	Airzone Wireless Think Controller (White)	☐ AZZBSTHINKRB
	Backup Heat Relay Kit Adapter for CN24 or CN152 on ducted models	☐ CN24RELAY-KIT-CM3
	On/Off and Error Status Output Adapter for CN51 or CN52	☐ PAC-725AD
	On/Off and Error Status Output Adapter for CN51 or CN52	☐ PAC-SA88HA-EP
	On/Off Input Adapter for CN32 and Forced Fan Operation Input Adapter for SWE	☐ PAC-715AD
	Operation and Error Status Output Adapter	☐ PAC-SF40RM-E
	Thermostat Interface for 3rd Party Thermostats	☐ PAC-US445CN-1
	Wireless Interface for kumo cloud®	☐ PAC-USWHS002-WF-2
Remote Sensor	Flush Mount Remote Temperature Sensor for SEZ, SLZ, SVZ and all P-Series models	☐ PAC-USSEN002-FM-1
	Wall Mount Remote Temperature Sensor	☐ PAC-SE41TS-E
	Wireless temperature and humidity sensor for kumo cloud®	☐ PAC-USWHS003-TH-1
Wired Remote Controller	Simple Ductless Wired Remote Controller	☐ PAC-SDW01RC-1
	Simple MA Remote Controller	☐ PAC-YT53CRAU-J
Wireless Remote Controller	kumo touch™ RedLINK™ Wireless Controller & Receiver kit	☐ MHK2
	Lockdown Bracket for Wireless Handheld Remote Controllers	☐ RCMKP1CB
	Portable Central Controller	☐ MCCH1
	Wireless Signal Receiver	☐ PAR-SA9CA-E
Condensate	Blue Diamond (Advanced) Mini Condensate Pump w/ Reservoir & Sensor (208/230V) [recommended]	☐ X87-721
	Blue Diamond (MaxiBlue Advanced) Mini Condensate Pump w/ Reservoir & Sensor (110V) up to 48,000 BTU/H [recommended]	☐ X87-711
	Blue Diamond (MicroBlue) Mini Condensate Pump (110/208/230V) up to 18,000 BTU/H	☐ X86-003
	Refco Condensate Pump (100-240 VAC) up to 120,000 BTU/H	☐ COMBI
Control Wire	20/2PR, 1PR shielded + 1PR plenum wire for Airzone, 100 ft reel	☐ CW2042S2-100
	20/2PR, shielded + 1PR plenum wire for Airzone, 500 ft reel	☐ CW2042S2-500
Disconnect Switch	(30A/600V/UL) [fits 2” X 4” utility box] - Black	☐ TAZ-MS303
Filter Box	Filter Box with MERV 8 Filter	☐ FBL1-1
Lineset		☐ Lineset 1/4x3/8
	15’ x 1/4” x 15’ / 3/8” Lineset (Twin-Tube Insulation)	☐ MLS143812T-15
	30’ x 1/4” x 30’ / 3/8” Lineset (Twin-Tube Insulation)	☐ MLS143812T-30
	50’ x 1/4” x 50’ / 3/8” Lineset (Twin-Tube Insulation)	☐ MLS143812T-50
	65’ x 1/4” x 65’ / 3/8” Lineset (Twin-Tube Insulation)	☐ MLS143812T-65

NOTES:
‡PAC-SF40RM-E (Unable to use with wireless remote controller)

© 2024 Mitsubishi Electric Trane HVAC US LLC. All rights reserved.

OUTDOOR UNIT ACCESSORIES: SUZ-KA09NAHZ

Air Outlet Guide	Air Outlet Guide	☐ MAC-886SG-E
Control/Service Tool	M- & P-Series Maintenance Tool Cable Set	☐ M21EC0397
Drain Socket	Drain Socket	☐ MAC-871DS
Mini-Split Wire	14 Gauge, 4 wire MiniSplit Cable—250 ft. roll	☐ S144-250
	14 Gauge, 4 wire MiniSplit Cable—250 ft. roll	☐ SW144-250
	14 Gauge, 4 wire MiniSplit Cable—50 ft. roll	☐ S144-50
	14 Gauge, 4 wire MiniSplit Cable—50 ft. roll	☐ SW144-50
	16 Gauge, 4 wire MiniSplit Cable—250 ft. roll	☐ S164-250
	16 Gauge, 4 wire MiniSplit Cable—250 ft. roll	☐ SW164-250
	16 Gauge, 4 wire MiniSplit Cable—50 ft. roll	☐ S164-50
	16 Gauge, 4 wire MiniSplit Cable—50 ft. roll	☐ SW164-50
Mounting Pad	Condensing Unit Mounting Pad: 16” x 36” x 3”	☐ ULTRILITE1
Snow/Rain Diverter	Snow/Rain Diverter	☐ SRD-3
Stand	18” Single Fan Stand	☐ QSMS1801M
	24” Single Fan Stand	☐ QSMS2401M
	Condenser Wall Bracket	☐ QSWB2000M-1
	Outdoor Unit 3-1/4 inch Mounting Base (Pair) - Plastic	☐ DSD-400P
	Outdoor Unit Stand — 12” High	☐ QSMS1201M

Specifications are subject to change without notice.

© 2024 Mitsubishi Electric Trane HVAC US LLC. All rights reserved.

INDOOR UNIT DIMENSIONS: SEZ-KD09NA4R1

Unit: mm (inch)

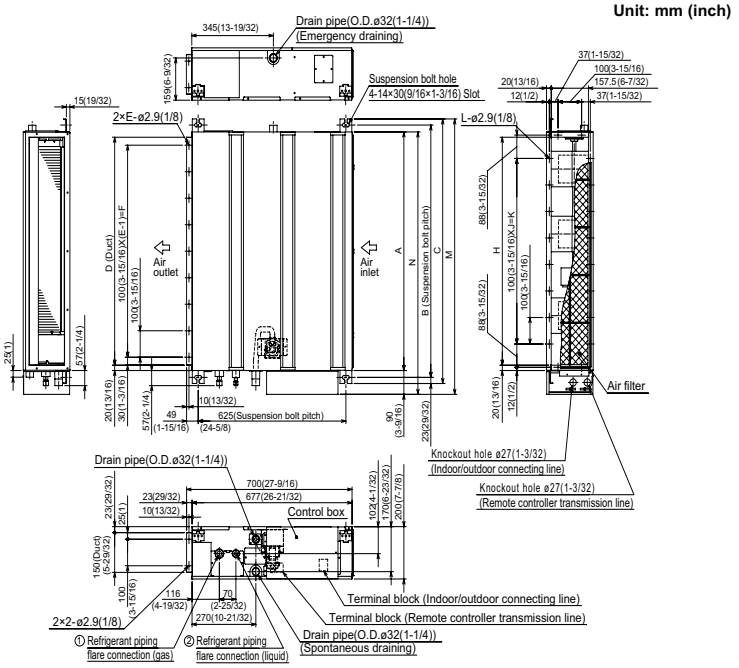

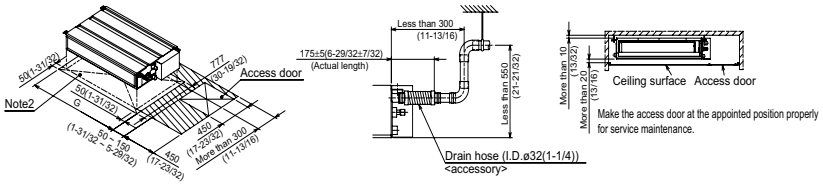

Required space for service and maintenance

mm (in.)

Sizes	A	B	C	D	E	F	G	H	J	K	L	M	N	① Gas pipe	②Liquid pipe
09 KBTU/H	700 (27-9/16)	752 (29-5/8)	798 (31-7/16)	660 (26)	7	600 (23-5/8)	800 (31-1/2)	660 (26)	5	500 (19-11/16)	16	839 (33-1/16)	790 (31-1/8)	ø9.52(3/8)	ø6.35(1/4)
12 KBTU/H	900 (35-7/16)	952 (37-1/2)	998 (39-5/16)	860 (33-7/8)	9	800 (31-1/2)	1000 (39-3/8)	860 (33-7/8)	7	700 (27-9/16)	20	1039 (40-29/32)	990 (39)		
15 KBTU/H														ø12.7(1/2)	
18 KBTU/H	1100 (43-5/16)	1152 (45-3/8)	1198 (47-3/16)	1060 (41-3/4)	11	1000 (39-3/8)	1200 (47-1/4)	1060 (41-3/4)	9	900 (35-7/16)	24	1239 (48-25/32)	1190 (46-7/8)		

Note1. Use M10 screw for the suspension bolt (field supply).
2. Keep the service space for the maintenance at the bottom.
3. This chart indicates for size 15 kBtu/h model, which has 3 fans.
Sizes 09,12 kBtu/h models have 2 fans.
Sizes 08 kBtu/h model has 4 fans.
4. When an inlet duct is used, remove the air filter (supply with the unit), then install the filter (field supply) at suction side.

© 2024 Mitsubishi Electric Trane HVAC US LLC. All rights reserved.

OUTDOOR UNIT DIMENSIONS: SUZ-KA09NAHZ

Unit: inch

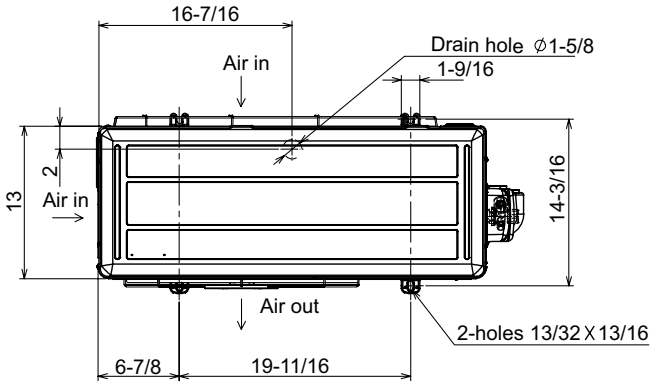

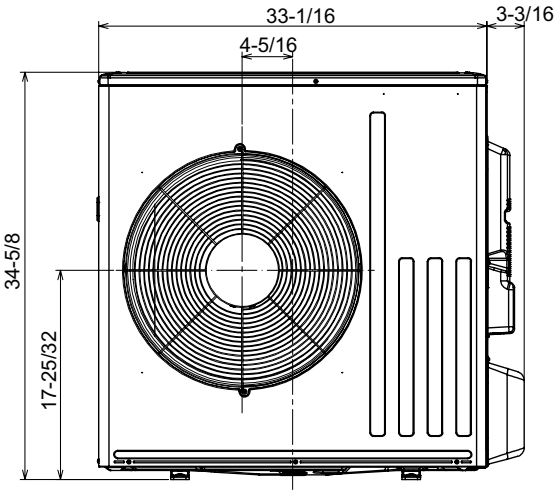

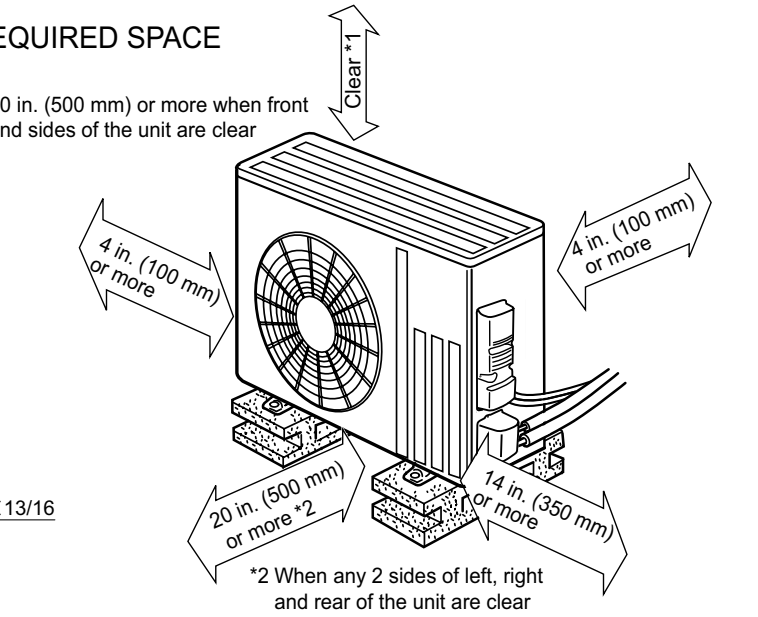

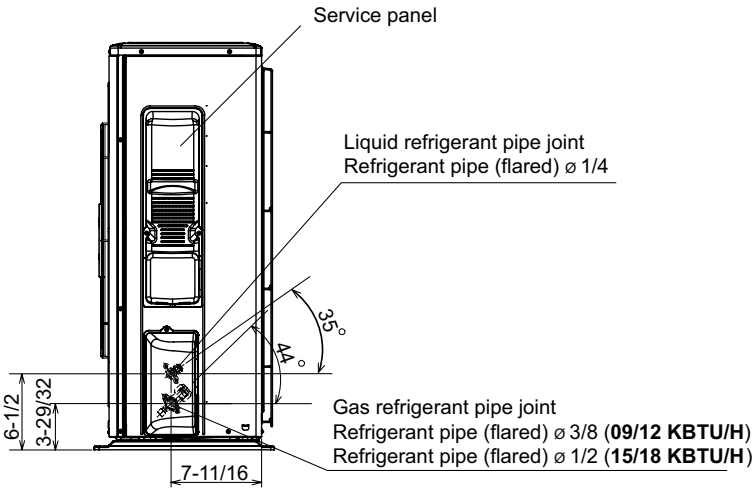

1340 Satellite Boulevard Suwanee, GA 30024
Toll Free: 800-433-4822 www.mehvac.com

FORM# SEZ-KD09NA4R1 & SUZ-KA09NAHZ - 202407

Specifications are subject to change without notice.

© 2024 Mitsubishi Electric Trane HVAC US LLC. All rights reserved.