S-MEXT-G02-M1-O-006B & PUY-A24NHA7
24,000 BTU/H COOLING ONLY OUTDOOR

Job Name:	
System Reference:	Date:

Premium Indoor Unit.....S-MEXT-G02-M1-O-006B

Outdoor Unit.....PUY-A24NHA7

PREMIUM MODEL INDOOR UNIT, UP-FLOW CONFIGURATION

- Computer Room Air Conditioning (CRAC) unit meets and exceeds the DOE CMMS import requirements
- Standard safety devices include alarms for clogged filter, water presence on floor, and loss of air flow
- Variable-speed EC centrifugal fans
- Steam humidifier, 3 L/h with auto-flush cycle
- Dehumidification functionality with electronic temperature control
- Relative humidity intake air sensing for humidification and dehumidification
- Remote air temperature sensing
- Electric heater with 2.6 kW capacity

BUILT-IN EVOLUTION + CONTROLLER FEATURES

- Includes a 6-key keypad and a graphic display on a backlit LCD screen that shows a real-time view of the unit status and other details
- Logs up to 200 events using resilient flash memory for detailed system performance tracking
- Provides enhanced network functions and centralized control
  - LAN network to connect up to 10 s-MEXT units
  - Balance of units' operating hours (stand-by unit rotation)
  - Stand-by unit activation in case of failure or excessive load
  - Shared user interface to view all units from one single keypad
- Minimizes energy consumption using a standby mode to keep the system operational
- Comprehensive temperature management including average temperature display, temperature and humidity limits, fan operation in standby mode, and high and low temperature protection

OUTDOOR UNIT FEATURES

- Variable speed INVERTER-driven compressor
- Pre-charged with refrigerant volume for piping length up to 98 ft
- Low ambient cooling down to 5°F providing 100% capacity (with wind baffles)
- 24-hour continuous operation
- High pressure protection
- Automatic restart after power interruption
- Superior energy and operational efficiency
- Seacoast protection*
  - Phosphate and acrylic-enamel coating on the external outer panel
  - Epoxy resin coating at the edge face on the fan motor and separator assembly valve bed
  - Separator Assembly Valve Bed: Epoxy resin coating (at edge face)
  - Blue Fin anti-corrosion treatment on the heat exchanger coil to protect it against airborne contaminants
  - Heat exchanger and coil base panel rated for 2,000 hours in accordance with ASTM B117 testing

*Seacoast protection standard from 2022 production

Specifications are subject to change without notice.

© 2024 Mitsubishi Electric Trane HVAC US LLC. All rights reserved.

SPECIFICATIONS: S-MEXT-G02-M1-O-006B & PUY-A24NHA7

Total Cooling Capacity		BTU/H	22,178
Sensible Cooling Capacity		BTU/H	22,178
Sensible Heat Ratio (SHR)			1
SCOP A			4.19
SCOP B			5.12
SCOP C			5.34
SCOP D			5.71
Integrated SCOP			5.21
Electrical	Voltage, Phase, Frequency		208/230, 1, 60
	Guaranteed Voltage Range	V AC	187 - 253
	Voltage: Indoor - Outdoor, S1-S2	V DC	0
	Voltage: Indoor - Outdoor, S2-S3	V DC	24
	Short-circuit Current Rating [SCCR]	kA	5
	Recommended Fuse/Breaker Size [Oudoor]	A	25
	Recommended Wire Size [Indoor - Outdoor]	AWG	14
Indoor Unit	MCA	A	27.1
	MOCP	A	30
	Fan Quantity		1
	Fan Motor Type		DC Motor
	Fan Motor Output	W	0.3
	Fan Motor Full Load Amperage	A	23.6
	Fan Airflow	CFM	1,315
	Drain Pipe Size	In. [mm]	3/4 [19]
	Heat exchanger		Cross fin (Aluminum fin and copper tube)
	External Finish Color		Galvanised steel sheet with epoxy powder coat
	Unit Dimensions	W x D x H: In. [mm]	23-5/8 x 19-11/16 x 77-61/64 [600 x 500 x 1,980]
	Unit Weight		233 [106]
Outdoor Unit	MCA	A	19
	MOCP	A	26
	Fan Motor Output	W	74
	Airflow Rate [Cooling / Heating]	CFM	1,940
	Refrigerant Control		Linear expansive valve
	Defrost Method		Reverse Cycle
	Coating on Heat Exchanger		Blue Fin Coating***
	Sound Pressure Level, Cooling[1]	dB(A)	47
	Compressor Type		DC INVERTER-driven Twin Rotary
	Compressor Model		SNB172FWHM1
	Compressor Oil [Type // Charge]	oz.	FV50S
	External Finish Color		Ivory Munsell 3Y 7.8/1.1
	Base Pan Heater		N/A
	Unit Dimensions	W x D x H: In. [mm]	37-13/32 x 13 (+1-3/16) x 37-1/8 [950 x 330 (+30) x 943]
	Package Dimensions	W x D x H: In. [mm]	41 x 18 x 43 [1,040 x 450 x 1,079]
	Unit Weight	Lbs. [kg]	151 [68]
	Package Weight	Lbs. [kg]	174 [79]
Outdoor Unit Operating Temperature Range	Cooling Air Temp [Maximum / Minimum]*	°F	115 DB / 5 DB
Refrigerant	Type		R410A
	Pre-Charged Refrigerant Amount	Lbs, oz	7.0, 11.0
	Maximum Pre-Charged Piping Length	Ft. [m]	70.0 [21.0]
	Additional Refrigerant Charge Per Additional Piping Length	oz./Ft. [g/m]	1.5 [28]
Piping	Gas Pipe Size O.D. [Flared]	In.[mm]	5/8 [15.88]
	Liquid Pipe Size O.D. [Flared]	In.[mm]	3/8 [9.52]
	Maximum Piping Length	Ft. [m]	225 [69]
	Maximum Number of Bends		15

NOTES:
Rated Conditions
(Consistent with AHRI 1360 test standard) [1]Cooling (Indoor // Outdoor) °F 80 DB, 67 WB // 95 DB, 75 WB

*Indoor/Outdoor Unit Operating Temperature Range (Cooling Air Temp [Maximum / Minimum]):
- Wind baffles required to operate below 23°F DB in cooling mode.
- Cooling-only system with advanced wind baffle: 5°F - 115°F.
- Refer to wind baffle documentation for further information.

***Blue Fin Coating Standard from 2022 production:
- PUY-A(12/18)NKA7 - Beginning with serial number 12U*****
- PUY-A(24/30/36/42)NKA7 - Beginning with serial number 1ZU*****

Specifications are subject to change without notice.

© 2024 Mitsubishi Electric Trane HVAC US LLC. All rights reserved.

OUTDOOR UNIT ACCESSORIES: PUY-A24NHA7

Air Outlet Guide	Air Outlet Guide (1 Piece)	☐ PAC-SG59SG-E
Centralized Drain Pan	Drain Pan	☐ PAC-SG64DP-E
Control/Service Tool	Control/Service Tool	☐ PAC-SK52ST
	M- & P-Series Maintenance Tool Cable Set	☐ M21EC0397
	Maintenance Tool Interface	☐ PAC-USCMS-MN-1
	USB/UART Conversion Cable (Required for all laptop connection)	☐ M21EC1397
Hail Guards	Hail Guard	☐ HG-A6
M-NET Converter	M-NET Converter	☐ PAC-SJ85MA-E
	M-NET Converter	☐ PAC-SJ95MA-E
Mini-Split Wire	14 Gauge, 4 wire MiniSplit Cable—250 ft. roll	☐ S144-250
	14 Gauge, 4 wire MiniSplit Cable—250 ft. roll	☐ SW144-250
	14 Gauge, 4 wire MiniSplit Cable—50 ft. roll	☐ S144-50
	14 Gauge, 4 wire MiniSplit Cable—50 ft. roll	☐ SW144-50
	16 Gauge, 4 wire MiniSplit Cable—250 ft. roll	☐ S164-250
	16 Gauge, 4 wire MiniSplit Cable—250 ft. roll	☐ SW164-250
	16 Gauge, 4 wire MiniSplit Cable—50 ft. roll	☐ S164-50
	16 Gauge, 4 wire MiniSplit Cable—50 ft. roll	☐ SW164-50
Mounting Pad	Condensing Unit Mounting Pad: 24” x 42” x 3”	☐ ULTRILITE2
Snow/Rain Diverter	Snow/Rain Diverter	☐ SRD-4
Stand	18” Single Fan Stand	☐ QSMS1801M
	24” Single Fan Stand	☐ QSMS2401M
	Condenser Wall Bracket	☐ QSWB2000M-1
	Condenser Wall Bracket - Stainless Steel Finish	☐ QSWBSS
	Outdoor Unit Stand — 12” High	☐ QSMS1201M
Wind Baffle	Front Wind Baffle	☐ WB-PA5
	Rear Wind Baffle	☐ WB-RE5
	Side Advanced Wind Baffle	☐ WB-SD5

© 2024 Mitsubishi Electric Trane HVAC US LLC. All rights reserved.

INDOOR UNIT DIMENSIONS: S-MEXT-G02-M1-O-006B

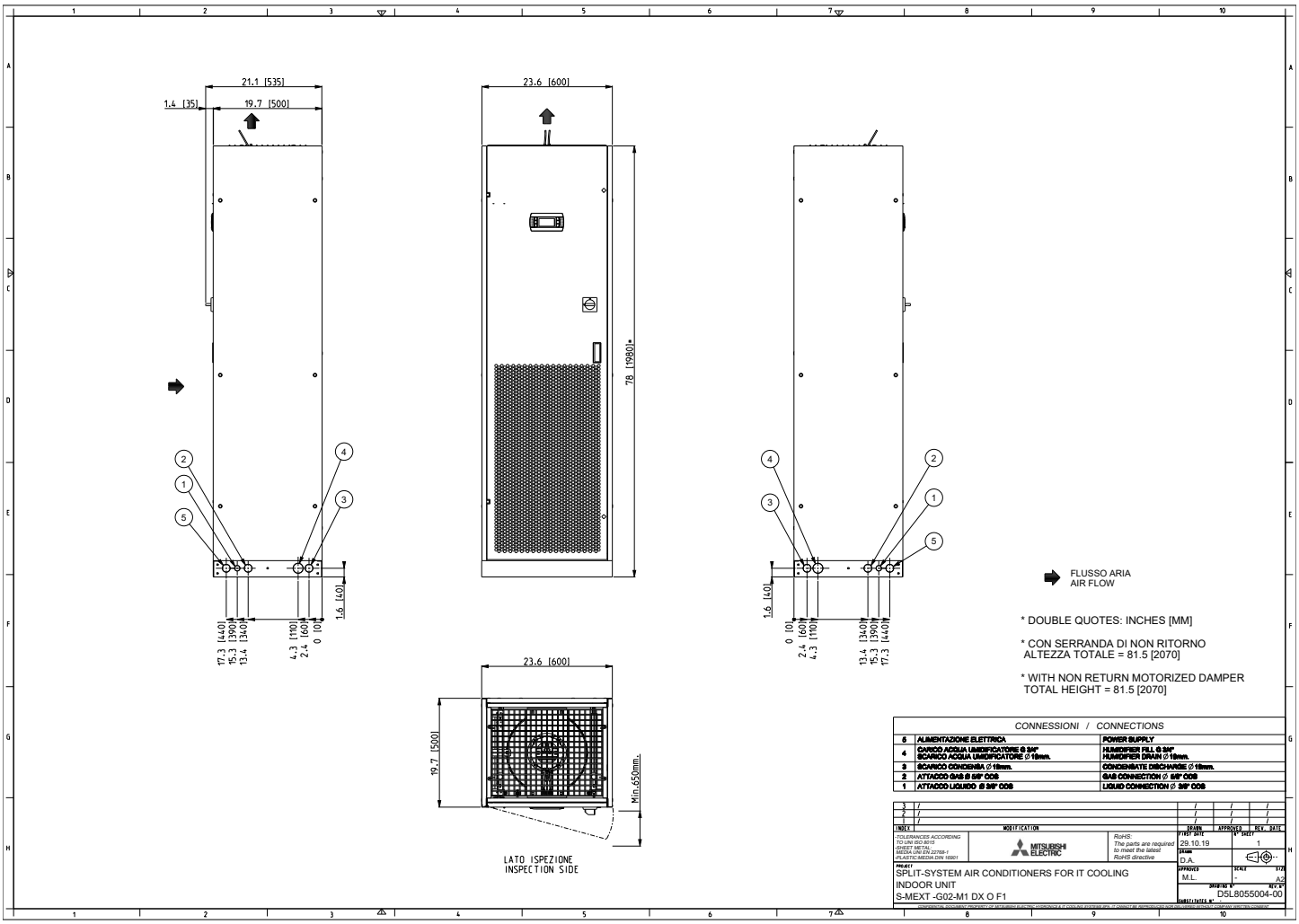

© 2024 Mitsubishi Electric Trane HVAC US LLC. All rights reserved.

OUTDOOR UNIT DIMENSIONS: PUY-A24NHA7

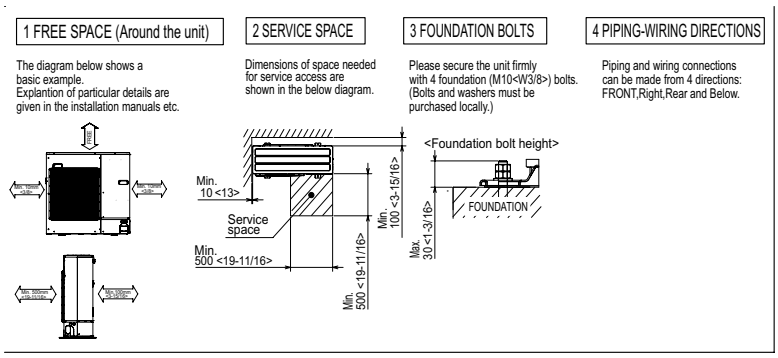

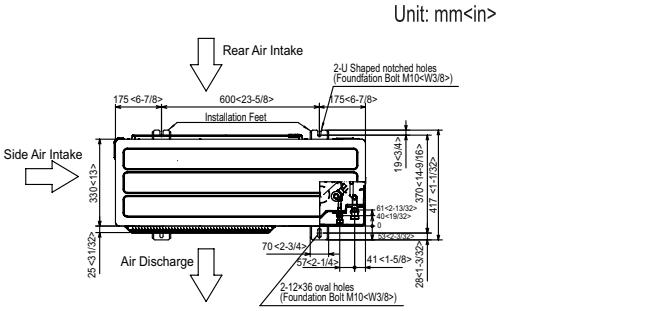

Example of Notes

① ··· Refrigerant GAS pipe connection (FLARE) ø15.88(5/8F)
② ··· Refrigerant LIQUID pipe connection (FLARE) ø 9.52(3/8F)
*1··· Indication of STOP VALVE connection location.

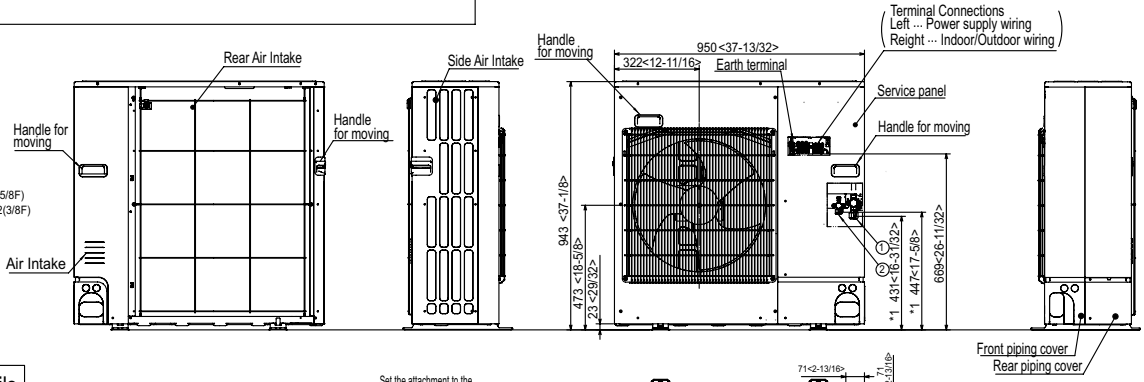

Piping knockout Hole Details

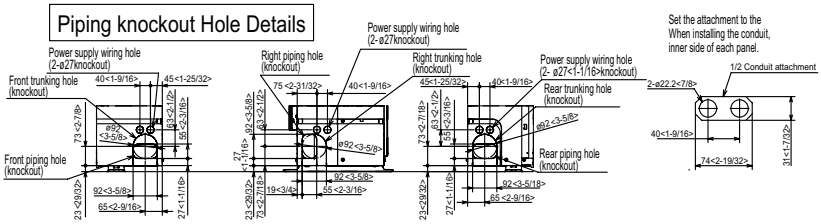

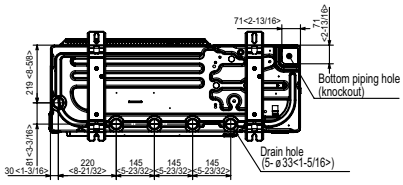

1340 Satellite Boulevard Suwanee, GA 30024
Toll Free: 800-433-4822 www.mehvac.com

FORM# S-MEXT-G02-M1-O-006B & PUY-A24NHA7 - 202406

Specifications are subject to change without notice.
© 2024 Mitsubishi Electric Trane HVAC US LLC. All rights reserved.