PEAD-A24AA9 & PUZ-A24NHA7
MID STATIC HORIZONTAL-DUCTED INDOOR UNIT
24,000 BTU/H HEAT PUMP UNIVERSAL OUTDOOR

Job Name:	
System Reference:	Date:

Indoor Unit PEAD-A24AA9

Outdoor Unit PUZ-A24NHA7

INDOOR UNIT FEATURES

- Unobtrusive ceiling-concealed design for short-run ductwork
- Wide ranging external static pressure (0.14-0.60 in. WG)
- Built-in condensate lift mechanism (up to 27-9/16”)
- Auto fan speed mode
- Optional FB Series filter boxes for easy access and service
- Ideal for residential homes, retail shopping centers, larger classrooms, office complexes, conference rooms, ballrooms, fitness centers, and more
- Multiple control options available:
  - kumo cloud® smart device app for remote access
  - Third-party interface options
  - Wired or wireless controllers

OUTDOOR UNIT FEATURES

- Variable speed INVERTER-driven compressor
- Pre-charged with refrigerant volume for piping length up to 70 ft
- Low ambient cooling down to 0°F providing 100% capacity
- 24-hour continuous operation (cooling mode)
- High pressure protection
- Fast restart
- Superior energy and operational efficiency
- Seacoast protection*
  - External Outer Panel: Phosphate coating + Acrylic-Enamel coating
  - Fan Motor Support: Epoxy resin coating (at edge face)
  - Separator Assembly Valve Bed: Epoxy resin coating (at edge face)
  - Blue Fin treatment is an anti-corrosion treatment that is applied to the Heat exchanger coil to protect it against airborne contaminants.
  - Heat exchanger coil and base panel rated for 2,000 hours in accordance with ASTM B117 testing

*Seacoast protection standard from 2022 production

Specifications are subject to change without notice.

© 2024 Mitsubishi Electric Trane HVAC US LLC. All rights reserved.

SPECIFICATIONS: PEAD-A24AA9 & PUZ-A24NHA7

Cooling at 95°F[1]	Maximum Capacity	BTU/H	24,000
	Rated Capacity	BTU/H	24,000
	Minimum Capacity	BTU/H	9,900
	Maximum Power Input	W	1,960
	Rated Power Input	W	1,960
	Moisture Removal	Pints/h	6.9
	Sensible Heat Factor		0.68
	Power Factor [208V / 230V]	%	92.0 / 92.0
Heating at 47°F[2]	Maximum Capacity	BTU/H	28,000
	Rated Capacity	BTU/H	26,000
	Minimum Capacity	BTU/H	10,000
	Maximum Power Input	W	2,240
	Rated Power Input	W	1,790
	Power Factor [208V / 230V]	%	92.0 / 92.0
Heating at 17°F[3]	Maximum Capacity	BTU/H	15,800
	Rated Capacity	BTU/H	15,800
	Maximum Power Input	W	1,730
	Rated Power Input	W	1,730
Heating at 5°F[4]	Maximum Capacity	BTU/H	14,300
	Maximum Power Input	W	1,920
Heating at -4°F[5]	Maximum Capacity	BTU/H	12,200
Efficiency	SEER2		20.1
	EER2[1]		12.2
	HSPF2 [IV]		9.3
	COP at 47°F[2]		4.2
	COP at 17°F at Maximum Capacity[3]		2.6
	COP at 5°F at Maximum Capacity[4]		2.2
	COP at -4°F at Maximum Capacity[5]		2.1
	ENERGY STAR® Certified		Yes
Electrical	Voltage, Phase, Frequency		208/230, 1, 60
	Guaranteed Voltage Range	V AC	198 - 253
	Voltage: Indoor - Outdoor, S1-S2	V AC	208/230
	Voltage: Indoor - Outdoor, S2-S3	V DC	24
	Short-circuit Current Rating [SCCR]	kA	5
	Recommended Fuse/Breaker Size (Outdoor)	A	25
	Recommended Wire Size [Indoor - Outdoor]	AWG	12
	Power Supply		Indoor unit is powered by the outdoor unit
Indoor Unit	MCA	A	2.25
	Fan Motor Full Load Amperage	A	1.80
	Fan Motor Output	W	121
	Fan Motor Type		DC Motor
	Airflow Rate at Cooling, Dry	CFM	512–565–636–742
	Airflow Rate at Heating, Dry	CFM	512–565–636–742
	Sound Pressure Level [Cooling]	dB[A]	27–29–31–35
	Sound Pressure Level [Heating]	dB[A]	27–29–31–35
	External Static Pressure	in.WG	0.14–0.2–0.28–0.4–0.6
	Drain Pipe Size	In. [mm]	1-1/4 [32]
	Condensate Lift Mechanism, Maximum Distance	In. [mm]	27-9/16 [700]
	Coating on Heat Exchanger		—
	External Finish Color		Galvanized
	Unit Dimensions	W x D x H: In. [mm]	43-5/16 x 28-7/8 x 9-7/8 [1,100 x 732 x 250]
	Package Dimensions	W x D x H: In. [mm]	53-15/16 x 35-7/16 x 13 [1,370 x 900 x 330]
	Unit Weight	Lbs. [kg]	67 [30]
	Package Weight	Lbs. [kg]	78 [35]
Indoor Unit Operating Temperature Range	Cooling Intake Air Temp [Maximum / Minimum]*	°F	95 DB, 71 WB / 67 DB, 57 WB
	Heating Intake Air Temp [Maximum / Minimum]	°F	80 DB / 70 DB

NOTES:

AHRI Rated Conditions (Rated data is determined at a fixed compressor speed)	[1]Cooling (Indoor // Outdoor)	°F	80 DB, 67 WB // 95 DB, 75 WB
	[2]Heating at 47°F (Indoor // Outdoor)	°F	70 DB, 60 WB // 47 DB, 43 WB
	[3]Heating at 17°F (Indoor // Outdoor)	°F	70 DB, 60 WB // 17 DB, 15 WB
Conditions	[4]Heating at 5°F (Indoor // Outdoor)	°F	70 DB, 60 WB // 5 DB, 4 WB

*Indoor/Outdoor Unit Operating Temperature Range (Cooling Air Temp [Maximum / Minimum]):
- Applications should be restricted to comfort cooling only; equipment cooling applications are not recommended for low ambient temperature conditions.
  - » Wind baffles required to operate below 23°F DB in cooling mode.
  - » Heat pump system with wind baffle: 0°F - 115°F.
  - » Refer to wind baffle documentation for further information.

**Outdoor Unit Operating Temperature Range (Cooling Thermal Lock-out / Re-start Temperatures; Heating Thermal Lock-out / Re-start Temperatures):
- System cuts out in heating mode to avoid thermistor error and automatically restarts at these temperatures.

***Blue Fin Coating Standard from 2022 production:
- PU(Y/Z)-A(12/18)NKA7 - Beginning with serial number 12U*****
- PU(Y/Z)-A(24/30/36/42)NKA7 - Beginning with serial number 1ZU*****

Specifications are subject to change without notice.

© 2024 Mitsubishi Electric Trane HVAC US LLC. All rights reserved.

SPECIFICATIONS: PEAD-A24AA9 & PUZ-A24NHA7

Outdoor Unit	MCA	A	19.0
	MOCP	A	26
	Fan Motor Output	W	74
	Airflow Rate [Cooling / Heating]	CFM	1940 / 1940
	Refrigerant Control		Linear expansive valve
	Defrost Method		Reverse Cycle
	Coating on Heat Exchanger		Blue Fin Coating***
	Sound Pressure Level, Cooling[1]	dB(A)	47
	Sound Pressure Level, Heating[2]	dB(A)	48
	Compressor Type		DC INVERTER-driven Twin Rotary
	Compressor Model		SNB172FWHM1
	Compressor Rated Load Amps	A	7
	Compressor Locked Rotor Amps	A	11.0
	Compressor Oil [Type // Charge]	oz.	FV50S // 23
	External Finish Color		Ivory Munsell 3Y 7.8/1.1
	Base Pan Heater		N/A
	Unit Dimensions	W x D x H: In. [mm]	37-13/32 x 13 (+1-3/16) x 37-1/8 [950 x 330 (+30) x 943]
	Package Dimensions	W x D x H: In. [mm]	41 x 18 x 43 [1040 x 1040 x 450]
	Unit Weight	Lbs. [kg]	153 [69]
	Package Weight	Lbs. [kg]	179 [81]
Outdoor Unit Operating Temperature Range	Cooling Air Temp [Maximum / Minimum]*	°F	115 DB / 0 DB
	Heating Air Temp [Maximum / Minimum]	°F	70 DB, 59 WB / -4 DB, -4 WB
	Heating Thermal Lock-out / Re-start Temperatures**	°F	-13 / -4
Refrigerant	Type		R410A
	Pre-Charged Refrigerant Amount	Lbs, oz	7.0, 11.0
	Maximum Pre-Charged Piping Length	Ft. [m]	70.0 [21.0]
	Additional Refrigerant Charge Per Additional Piping Length	oz./Ft. [g/m]	3.5 [65]
Piping	Gas Pipe Size O.D. [Flared]	In.[mm]	5/8 [15.88]
	Liquid Pipe Size O.D. [Flared]	In.[mm]	3/8 [9.52]
	Maximum Piping Length	Ft. [m]	165 [50]
	Maximum Height Difference	Ft. [m]	100 [30]
	Maximum Number of Bends		15

NOTES:

AHRI Rated Conditions (Rated data is determined at a fixed compressor speed)	[1]Cooling (Indoor // Outdoor)	°F	80 DB, 67 WB // 95 DB, 75 WB
	[2]Heating at 47°F (Indoor // Outdoor)	°F	70 DB, 60 WB // 47 DB, 43 WB
	[3]Heating at 17°F (Indoor // Outdoor)	°F	70 DB, 60 WB // 17 DB, 15 WB
Conditions	[4]Heating at 5°F (Indoor // Outdoor)	°F	70 DB, 60 WB // 5 DB, 4 WB

*Indoor/Outdoor Unit Operating Temperature Range (Cooling Air Temp [Maximum / Minimum]):
- Applications should be restricted to comfort cooling only; equipment cooling applications are not recommended for low ambient temperature conditions.
  - » Wind baffles required to operate below 23°F DB in cooling mode.
  - » Heat pump system with wind baffle: 0°F - 115°F.
  - » Refer to wind baffle documentation for further information.

**Outdoor Unit Operating Temperature Range (Cooling Thermal Lock-out / Re-start Temperatures; Heating Thermal Lock-out / Re-start Temperatures):
- System cuts out in heating mode to avoid thermistor error and automatically restarts at these temperatures.

***Blue Fin Coating Standard from 2022 production:
- PU(Y/Z)-A(12/18)NKA7 - Beginning with serial number 12U*****
- PU(Y/Z)-A(24/30/36/42)NKA7 - Beginning with serial number 1ZU*****

© 2024 Mitsubishi Electric Trane HVAC US LLC. All rights reserved.

INDOOR UNIT ACCESSORIES: PEAD-A24AA9

Control Interface	Airzone Wired Blueface Controller (White)	☐ AZZBSBLUEZEROCB
	Airzone Wired Lite Controller (White)	☐ AZZBSLITECB
	Airzone Wireless Lite Controller (White)	☐ AZZBSLITERB
	Airzone Wireless Think Controller (White)	☐ AZZBSTHINKRB
	Backup Heat Relay Kit Adapter for CN24 or CN152 on ducted models	☐ CN24RELAY-KIT-CM3
	IT Extender for kumo station™	☐ PAC-WHS01IE-E
	kumo station™ for kumo cloud®	☐ PAC-WHS01HC-E
	On/Off Input Adapter for CN32 and Forced Fan Operation Input Adapter for SWE	☐ PAC-715AD
	Operation and Error Status Output Adapter	☐ PAC-SF40RM-E
	Procon BACnet® and Modbus® Interface	☐ PAC-UKPRC001-CN-1
	Thermostat Interface for 3rd Party Thermostats	☐ PAC-US445CN-1
	USNAP Adapter for Demand Response	☐ PAC-WHS01UP-E
	Wireless Interface for kumo cloud®	☐ PAC-USWHS002-WF-2
Remote Sensor	Flush Mount Remote Temperature Sensor for SEZ, SLZ, SVZ and all P-Series models	☐ PAC-USSEN002-FM-1
	Wall Mount Remote Temperature Sensor	☐ PAC-SE41TS-E
	Wireless temperature and humidity sensor for kumo cloud®	☐ PAC-USWHS003-TH-1
Wired Remote Controller	Deluxe MA Wired Remote Controller†	☐ PAR-41MAAU
	Simple Ductless Wired Remote Controller	☐ PAC-SDW01RC-1
	Simple MA Remote Controller	☐ PAC-YT53CRAU-J
	Touch MA Wired Remote Controller	☐ PAR-CT01MAU-SB
Wireless Remote Controller	kumo touch™ RedLINK™ Wireless Controller & Receiver kit	☐ MHK2
	Lockdown Bracket for Wireless Handheld Remote Controllers	☐ RCMKP1CB
	Universal Wireless MA Handheld Remote Controller	☐ PAR-FL32MA-E
	Universal Wireless Receiver for PAR-FL32MA-E	☐ PAR-FA32MA-W
	Wireless Signal Receiver	☐ PAR-SA9CA-E
Condensate	Blue Diamond (Advanced) Mini Condensate Pump w/ Reservoir & Sensor (208/230V) [recommended]	☐ X87-721
	Blue Diamond (MegaBlue Advanced) Condensate Pump w/ Reservoir & Sensor	☐ X87-835
	Blue Diamond Sensor Extension Cable — 15 Ft.	☐ C13-103
	Refco Condensate Pump (100-240 VAC) up to 120,000 BTU/H	☐ COMBI
Control Wire	20/2PR, 1PR shielded + 1PR plenum wire for Airzone, 100 ft reel	☐ CW2042S2-100
	20/2PR, shielded + 1PR plenum wire for Airzone, 500 ft reel	☐ CW2042S2-500
Disconnect Switch	(30A/600V/UL) [fits 2” X 4” utility box] - Black	☐ TAZ-MS303
	(30A/600V/UL) [fits 2” X 4” utility box] - White	☐ TAZ-MS303W
Filter Box	Filter Box with MERV 13 Filter	☐ FBM2-3-A
Lineset		☐ Lineset 3/8x5/8
	10’ x 3/8” x 10’ x 5/8” Lineset (Twin-Tube Insulation)	☐ MPLS385812T-10
	100’ x 3/8” x 100’ x 5/8” Lineset (Twin-Tube Insulation)	☐ MPLS385812T-100
	15’ x 3/8” x 15’ x 5/8” Lineset (Twin-Tube Insulation)	☐ MPLS385812T-15
	30’ x 3/8” x 30’ x 5/8” Lineset (Twin-Tube Insulation)	☐ MPLS385812T-30
	50’ x 3/8” x 50’ x 5/8” Lineset (Twin-Tube Insulation)	☐ MPLS385812T-50
	65’ x 3/8” x 65’ x 5/8” Lineset (Twin-Tube Insulation)	☐ MPLS385812T-65

NOTES:
‡PAC-SF40RM-E (Unable to use with wireless remote controller)

© 2024 Mitsubishi Electric Trane HVAC US LLC. All rights reserved.

OUTDOOR UNIT ACCESSORIES: PUZ-A24NHA7

Air Outlet Guide	Air Outlet Guide (1 Piece)	☐ PAC-SG59SG-E
Centralized Drain Pan	Drain Pan	☐ PAC-SG64DP-E
Control/Service Tool	Control/Service Tool	☐ PAC-SK52ST
	M- & P-Series Maintenance Tool Cable Set	☐ M21EC0397
	USB Conversion Cable for PAC-USCMS-MN-1	☐ M21EC1397
Hail Guards	Hail Guard	☐ HG-A6
M-NET Converter	M-NET Converter	☐ PAC-SJ95MA-E
	M-Net Interface for P-Series	☐ PAC-SJ85MA-E
Mini-Split Wire	14 Gauge, 4 wire MiniSplit Cable—250 ft. roll	☐ S144-250
	14 Gauge, 4 wire MiniSplit Cable—250 ft. roll	☐ SW144-250
	14 Gauge, 4 wire MiniSplit Cable—50 ft. roll	☐ S144-50
	14 Gauge, 4 wire MiniSplit Cable—50 ft. roll	☐ SW144-50
	16 Gauge, 4 wire MiniSplit Cable—250 ft. roll	☐ S164-250
	16 Gauge, 4 wire MiniSplit Cable—250 ft. roll	☐ SW164-250
	16 Gauge, 4 wire MiniSplit Cable—50 ft. roll	☐ S164-50
	16 Gauge, 4 wire MiniSplit Cable—50 ft. roll	☐ SW164-50
Mounting Pad	Condensing Unit Mounting Pad: 24” x 42” x 3”	☐ ULTRILITE2
Snow/Rain Diverter	Snow/Rain Diverter	☐ SRD-4
Stand	18” Single Fan Stand	☐ QSMS1801M
	24” Single Fan Stand	☐ QSMS2401M
	Condenser Wall Bracket	☐ QSWB2000M-1
	Condenser Wall Bracket - Stainless Steel Finish	☐ QSWBSS
	Outdoor Unit Stand — 12” High	☐ QSMS1201M
Wind Baffle	Front Wind Baffle	☐ WB-PA5
	Rear Wind Baffle	☐ WB-RE5
	Side Advanced Wind Baffle	☐ WB-SD5

© 2024 Mitsubishi Electric Trane HVAC US LLC. All rights reserved.

INDOOR UNIT DIMENSIONS: PEAD-A24AA9

INDOOR UNIT

PEAD-A09, 12, 15, 18, 24, 30, 36, 42AA9

Notes
1. Use an M10 screw for the suspension bolt (field supply).
2. Keep the service space for maintenance at the bottom.
3. This drawing is for PEAD-A09·12·15·18·24·30AA9 models,which have 2 fans. PEAD-A36·42AA9 models have 3 fans.
4. If the inlet duct is used,remove the air filter(supplied with the unit),then install the filter(field supply) at the suction side.
5. Heat air to 0°C(32°F) or higher when taking fresh air with a fresh air intake.

Unit:mm(in.)

Model	J	①Gas pipe	②Liquid pipe
PEAD-A09AA9	62 (2-1/2)	ø9.52 (3/8)	ø6.35 (1/4)
PEAD-A12,15, 18AA9		ø12.7 (1/2)	
PEAD-A24,30AA9	66 (2-5/8)	ø15.88 (5/8)	ø9.52 (3/8)
PEAD-A36,42AA9			

Unit:mm(in.)

Model	A	B	C	D	E	F	G	H
PEAD-A09,12, 15,18AA9	900 (35-7/16)	954 (37-9/16)	1000 (39-3/8)	860 (33-7/8)	9	800 (31-1/2)	858 (33-13/16)	72 (2-7/8)
PEAD-A24,30AA9	1100 (43-5/16)	1154 (45-7/16)	1200 (47-1/4)	1060 (41-3/4)	11	1000 (39-3/8)	1058 (41-11/16)	78 (3-1/8)
PEAD-A36,42AA9	1400 (55-1/8)	1454 (57-1/4)	1500 (59-1/16)	1360 (53-9/16)	14	1300 (51-3/16)	1358 (53-1/2)	

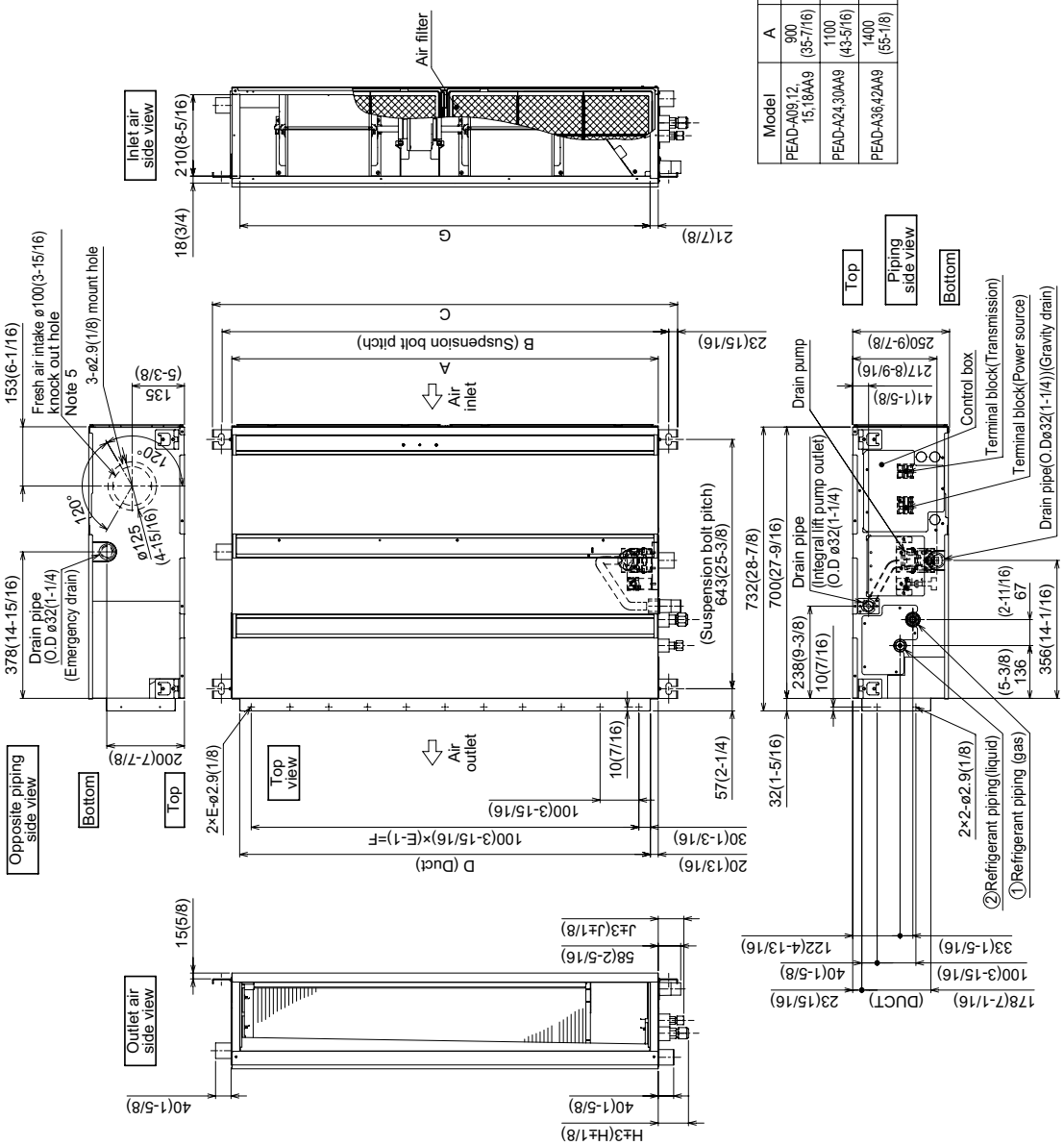

© 2024 Mitsubishi Electric Trane HVAC US LLC. All rights reserved.

OUTDOOR UNIT DIMENSIONS: PUZ-A24NHA7

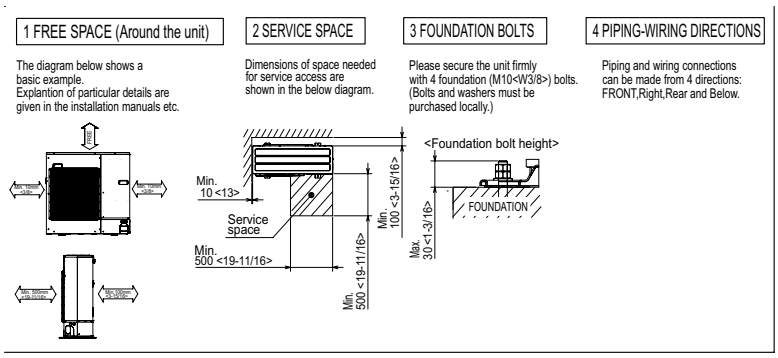

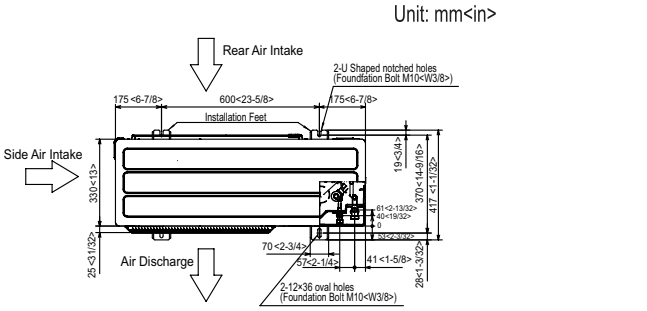

Example of Notes

① ··· Refrigerant GAS pipe connection (FLARE) ø15.88(5/8F)
② ··· Refrigerant LIQUID pipe connection (FLARE) ø 9.52(3/8F)
*1··· Indication of STOP VALVE connection location.

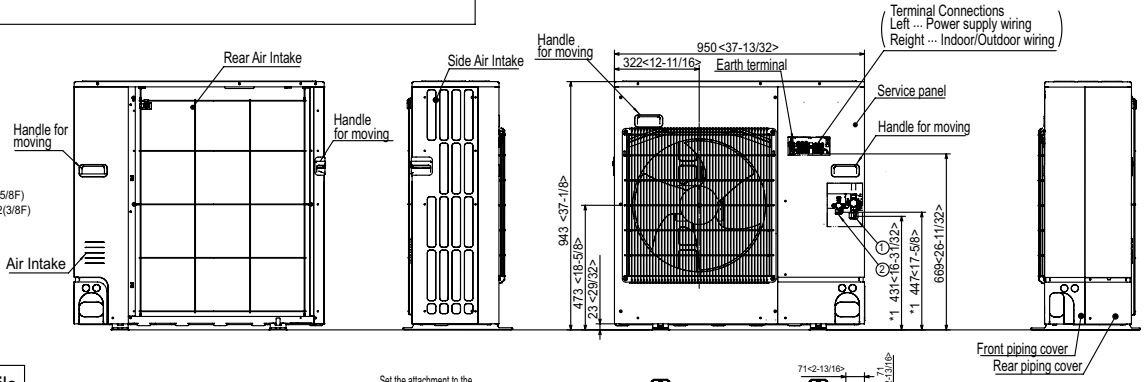

Piping knockout Hole Details

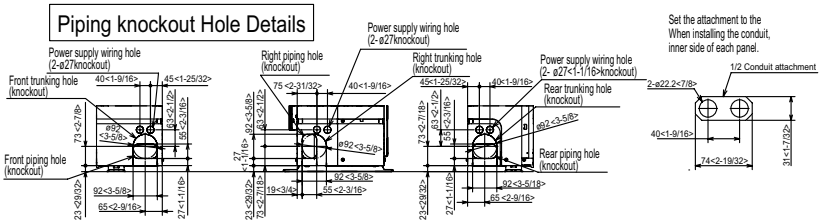

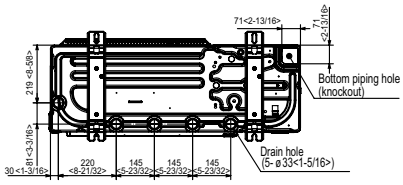

1340 Satellite Boulevard Suwanee, GA 30024
Toll Free: 800-433-4822 www.mehvac.com

FORM# PEAD-A24AA9 & PUZ-A24NHA7 - 202408

Specifications are subject to change without notice.

© 2024 Mitsubishi Electric Trane HVAC US LLC. All rights reserved.