M-SERIES

SUBMITTAL DATA: MSZ-FH09NA & MUZ-FH09NA
9,000 BTU/H WALL-MOUNTED HEAT PUMP SYSTEM

MITSUBISHI ELECTRIC

Job Name:	
System Reference:	Date:

Indoor Unit: MSZ-FH09NA	Outdoor Unit: MUZ-FH09NA	Wireless Remote Controller

GENERAL FEATURES

- Slim wall-mounted indoor units provide zone comfort control.
- The outdoor unit powers the indoor unit, and should a power outage occur, the system is automatically restarted when power returns.
- INVERTER-driven compressor and LEV provide high efficiency and comfort while using only the energy needed to maintain maximum performance
- H2i® hyper heat performance offers 100% heating capacity at 5°F and 70% to 81% heating capacity at -13°F
- Multiple fan speed options: Quiet, Low, Medium, High, Super-high, Auto
- 3D i-see Sensor® enables advance features:
  - Indirect or Direct Airflow for personalized comfort
  - Absence Detection for energy-saving mode
- Double Vane features:
  - Separates airflow to deliver air across a large area
  - Simultaneously deliver air to two people in different locations
  - Generates more comfortable natural airflow pattern
- Multiple control options available:
  - Hand-held Remote Controller (provided with unit)
  - kumo cloud® smart device app for remote access
  - Third-party interface options
  - Wired or wireless controllers
- Triple-action Filtration: Nano Platinum Filter, Deodorizing Filter, & Electrostatic Anti-Allergy Enzyme Filter
- Hot-Start Technology: no cold air rush at equipment startup or when restarting after Defrost Cycle
- Quiet operation
- Blue Fin anti-corrosion treatment applied to the outdoor unit heat exchanger for increased coil protection and longer life

© 2021 Mitsubishi Electric Trane HVAC US LLC. All rights reserved.

SPECIFICATIONS: MSZ-FH09NA & MUZ-FH09NA

Cooling[1]	Maximum Capacity	BTU/H	12,000
	Rated Capacity	BTU/H	9,000
	Minimum Capacity	BTU/H	1,700
	Maximum Power Input	W	1,000
	Rated Power Input	W	560
	Moisture Removal	Pints/h	0.6
	Sensible Heat Factor		0.92
	Power Factor	%	90 / 90
Heating at 47°F[2]	Maximum Capacity	BTU/H	18,000
	Rated Capacity	BTU/H	10,900
	Minimum Capacity	BTU/H	1,600
	Maximum Power Input	W	1,470
	Rated Power Input	W	710
	Power Factor	%	94 / 94
Heating at 17°F[3]	Maximum Capacity	BTU/H	12,200
	Rated Capacity	BTU/H	6,700
	Maximum Power Input	W	1,440
	Rated Power Input	W	600
Heating at 5°F[4]	Maximum Capacity	BTU/H	10,900
	Maximum Power Input	W	1,350
Heating at -4°F[5]	Maximum Capacity	BTU/H	9,260
Heating at -13°F[6]	Maximum Capacity	BTU/H	7,630
Efficiency	SEER		30.5
	EER[1]		16.1
	HSPF (IV)		13.5
	COP at 47°F[2]		4.50
	COP at 17°F in Maximum Capacity[3]		2.48
	COP at 5°F in Maximum Capacity[4]		2.37
	ENERGY STAR® certified units (ENERGY STAR products are third-party certified by an EPA-recognized Certification Body.)		YES
Electrical	Voltage, Phase, Frequency		208/230V, 1 phase, 60Hz
	Guaranteed Voltage Range	V AC	187 - 253
	Voltage: Indoor - Outdoor, S1-S2	V AC	208 / 230
	Voltage: Indoor - Outdoor, S2-S3	V DC	24
	Short-circuit Current Rating (SCCR)	kA	5
	Recommended Fuse/Breaker Size (Outdoor)	A	15
	Recommended Wire Size (Indoor - Outdoor)	AWG	14
Indoor Unit	MCA	A	1
	MOCP	A	15
	Blower Motor Full Load Amperage	A	0.67
	Blower Motor Output	W	30
	Airflow Rate at Cooling, Dry	CFM	381-304-221-167-137
	Airflow Rate at Cooling, Wet	CFM	328-261-190-143-117
	Airflow Rate at Heating, Dry	CFM	437-325-225-167-140
	Sound Pressure Level (Cooling)	dB(A)	40-36-29-23-20
	Sound Pressure Level (Heating)	dB(A)	42-36-29-24-20
	Drain Pipe Size	In. (mm)	5/8 (15.88)
	Heat Exchanger Type		Plate fin coil
	External Finish Color		Munsell 1.0Y 9.2/0.2
	Unit Dimensions	W: In. (mm)	36-7/16 (925)
		D: In. (mm)	9-3/16 (234)

Specifications are subject to change without notice.

© 2021 Mitsubishi Electric Trane HVAC US LLC. All rights reserved.

SPECIFICATIONS: MSZ-FH09NA & MUZ-FH09NA

		H: In. (mm)	12 [+11/16] (305 [+17])
	Package Dimensions	W: In. (mm)	39 (990)
		D: In. (mm)	12-1/4 (310)
		H: In. (mm)	12-3/16 (310)
	Unit Weight	Lbs. (kg)	29 (13.5)
	Package Weight	Lbs. (kg)	34 (15.4)
Indoor Unit Operating Temperature Range	Cooling Intake Air Temp (Maximum / Minimum)*	°F	90 DB, 73 WB / 67 DB, 57 WB
	Heating Intake Air Temp (Maximum / Minimum)	°F	80 DB / 70 DB
Outdoor Unit	MCA	A	11
	MOCP	A	15
	Fan Motor Full Load Amperage	A	0.5
	Fan Motor Output	W	55
	Airflow Rate	CFM	1,074 / 1,202
	Refrigerant Control		LEV
	Defrost Method		Reverse cycle
	Heat Exchanger Type		Plate fin coil
	Sound Pressure Level, Cooling[1]	dB(A)	48
	Sound Pressure Level, Heating[2]	dB(A)	49
	Compressor Type		DC INVERTER-driven
	Compressor Model		SNV0912FQAMT
	Compressor Rated Load Amps	A	8.2
	Compressor Locked Rotor Amps	A	10.3
	Compressor Oil Type // Charge	oz.	FV50S // 11.8
	External Finish Color		Munsell 3Y 7.8/1/1
	Base Pan Heater		Optional
	Unit Dimensions	W: In. (mm)	31-1/3 (800)
		D: In. (mm)	11-1/5 (285)
		H: In. (mm)	21-5/9 (550)
	Package Dimensions	W: In. (mm)	37 (940)
		D: In. (mm)	14-15/16 (380)
		H: In. (mm)	24-13/16 (630)
	Unit Weight	Lbs. (kg)	81 (37)
	Package Weight	Lbs. (kg)	88 (40)
Outdoor Unit Operating Temperature Range	Cooling Air Temp (Maximum / Minimum)*	°F	115 / 14
	Cooling Thermal Lock-out / Re-start Temperatures**	°F	-1 / 3
	Heating Air Temp (Maximum / Minimum)	°F	75 / -13
	Heating Thermal Lock-out / Re-start Temperatures**	°F	-18 / -14
Refrigerant	Type		R410A
	Charge	Lbs, oz	2, 9
Piping	Gas Pipe Size O.D. (Flared)	In. (mm)	3/8 (9.52)
	Liquid Pipe Size O.D. (Flared)	In. (mm)	1/4 (6.35)
	Maximum Piping Length	Ft. (m)	65 (20)
	Maximum Height Difference	Ft. (m)	40 (12)
	Maximum Number of Bends		10

Specifications are subject to change without notice.

© 2021 Mitsubishi Electric Trane HVAC US LLC. All rights reserved.

SPECIFICATIONS: MSZ-FH09NA & MUZ-FH09NA

Notes

AHRI Rated Conditions (Rated data is determined at a fixed compressor speed)	[1]Cooling (Indoor // Outdoor)	°F	80 DB, 67 WB // 95 DB, 75 WB
	[2]Heating at 47°F (Indoor // Outdoor)	°F	70 DB, 60 WB // 47 DB, 43 WB
	[3]Heating at 17°F (Indoor // Outdoor)	°F	70 DB, 60 WB // 17 DB, 15 WB
Conditions	[4]Heating at 5°F (Indoor // Outdoor)	°F	70 DB, 60 WB // 5 DB, 4 WB
	[5]Heating at -4°F (Indoor // Outdoor)	°F	70 DB, 60 WB // -4 DB, -5 WB
	[6]Heating at -13°F (Indoor // Outdoor)	°F	70 DB, 60 WB // -13 DB, -14 WB

*Applications should be restricted to comfort cooling only; equipment cooling applications are not recommended for low ambient temperature conditions.
**System cuts out in heating mode to avoid thermistor error and automatically restarts at these temperatures.

© 2021 Mitsubishi Electric Trane HVAC US LLC. All rights reserved.

ACCESSORIES: MSZ-FH09NA

Deodorizing Filter	□ MAC-3000FT-E
Electrostatic Anti-allergy Enzyme Filter	□ MAC-2330FT-E
kumo touch™ RedLINK™ Wireless Controller	□ MHK2
Deluxe MA Remote Controller[1]	□ PAR-40MAAU
Simple MA Controller[1]	□ PAC-YT53CRAU-J
Touch MA Controller[1]	□ PAR-CT01MAU-SB
Wired Remote Sensor	□ M21EAA307
Wireless Temperature and Humidity Sensor	□ PAC-USWHS003-TH-1
System Control Interface[2]	□ MAC-334IF-E
Wireless Interface 2	□ PAC-USWHS002-WF-2
Thermostat Interface	□ PAC-US444CN-1
kumo station®	□ PAC-WHS01HC-E
USNAP Interface	□ PAC-WHS01UP-E
IT Extender	□ PAC-WHS01IE-E
BACnet® and MODBUS® Interface	□ PAC-UKPRC001-CN-1
External Fan / Heater Control Relay Adapter	□ CN24RELAY-KIT-CM3
Lockdown Bracket for Hand-held Remote Controllers	□ RCMKP1CB
Blue Diamond Sensor Extension Cable — 15 Ft.	□ C13-103
Blue Diamond Alarm Extension Cable — 6.5 Ft.	□ C13-192
Blue Diamond MultiTank — collection tank for use with multiple pumps	□ C21-014
Blue Diamond Rubber Foot Pads	□ F10-010
Mini Condensate Pump — 230 volt application	□ SI30-230
MegaBlue Advanced Blue Diamond Condensate Pump w/ Reservoir & Sensor	□ X87-835 - 110 to 250V
MaxiBlue Advanced Blue Diamond Mini Condensate Pump w/ Reservoir & Sensor (110V) up to 48,000 BTU/H[recommended]	□ X87-711 - 110V
Advanced Blue Diamond Mini Condensate Pump w/ Reservoir & Sensor (208/230V) [recommended]	□ X87-721 - 208/230V
MicroBlue Blue Diamond Mini Condensate Pump (110/208/230V) up to 18,000 BTU/H	□ X85-003
Fascia Kit for MicroBlue Pump – mounts the MicroBlue and sensor directly beneath the indoor unit	□ T18-016
Drain Pan Level Sensor	□ SS610E
(30A/600V/UL) [fits 2" X 4" utility box] - Black	□ TAZ-MS303
(30A/600V/UL) [fits 2" X 4" utility box] - White	□ TAZ-MS303W

[1] Requires MAC-334IF-E

[2] Allows indoor units to connect to an MA Controller

© 2021 Mitsubishi Electric Trane HVAC US LLC. All rights reserved.

ACCESSORIES: MUZ-FH09NA

Air Outlet Guide	□ MAC-881SG
Drain Socket	□ MAC-860DS
Optional Defrost Heater	□ MAC-640BH-U
Hail Guard	□ HG-B4
Outdoor Unit 3-1/4 inch Mounting Base (Pair) - Plastic	□ DSD-400P
Condensing Unit Mounting Pad 16" x 36" x 3"	□ ULTRILITE1
Outdoor Unit Stand — 12" High	□ QSMS1201M
Outdoor Unit Stand — 18" High	□ QSMS1801M
Outdoor Unit Stand — 24" High	□ QSMS2401M
Heavy Duty Wall Mounting Bracket— Coated Steel	□ QSWB2000M-1
Heavy Duty Wall Mounting Bracket — 316 Series Stainless Steel	□ QSWBSS
15' x 1/4" x 15' / 3/8" Lineset (Twin-Tube Insulation)	□ MLS143812T-15
30' x 1/4" x 30' / 3/8" Lineset (Twin-Tube Insulation)	□ MLS143812T-30
50' x 1/4" x 50' / 3/8" Lineset (Twin-Tube Insulation)	□ MLS143812T-50
65' x 1/4" x 65' / 3/8" Lineset (Twin-Tube Insulation)	□ MLS143812T-65

© 2021 Mitsubishi Electric Trane HVAC US LLC. All rights reserved.

DIMENSIONS: MSZ-FH09NA

Unit: inch

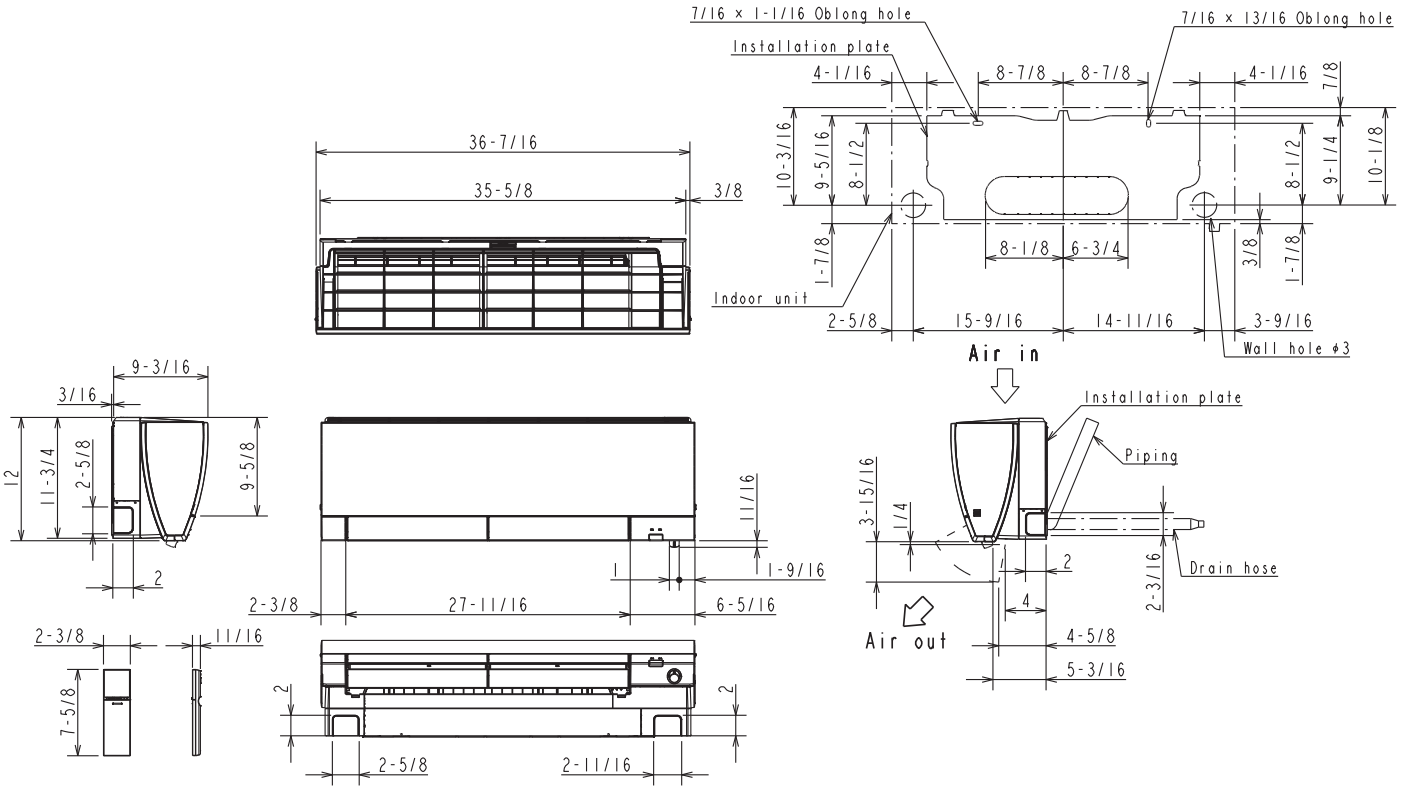

(06/09/12 KBTU/H)

Piping	Insulation	ϕ1-7/16 O.D
	Liquid line	ϕ1/4 19-11/16 (Flared connection ϕ1/4)
	Gas line	ϕ3/8 16-15/16 (Flared connection ϕ3/8)
Drain hose		Insulation ϕ1-1/8 Connected part ϕ5/8 O.D

(15/18 KBTU/H)

Piping	Insulation	ϕ1-7/16 O.D
	Liquid line	ϕ1/4 19-11/16 (Flared connection ϕ1/4)
	Gas line	ϕ3/8 16-15/16 (Flared connection ϕ1/2)
Drain hose		Insulation ϕ1-1/8 Connected part ϕ5/8 O.D

© 2021 Mitsubishi Electric Trane HVAC US LLC. All rights reserved.

DIMENSIONS: MUZ-FH09NA

Unit: inch

REQUIRED SPACE

*1 4 in. (100 mm) or more when front and sides of the unit are clear

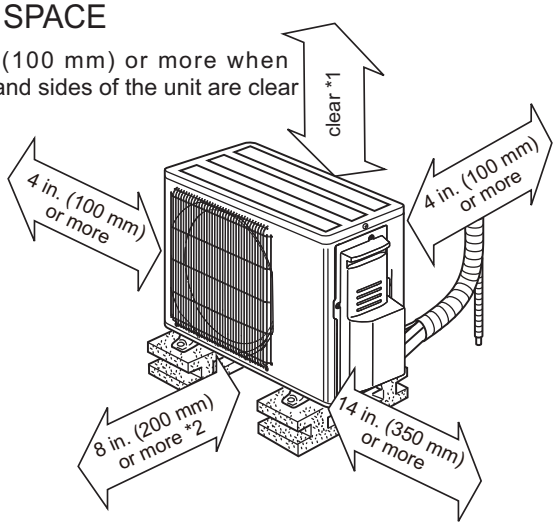

*2 When any 2 sides of left, right and rear of the unit are clear

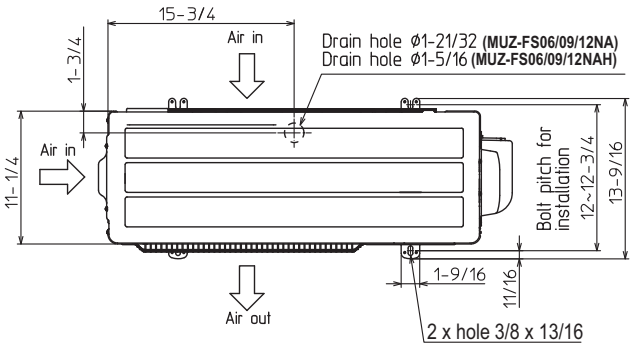

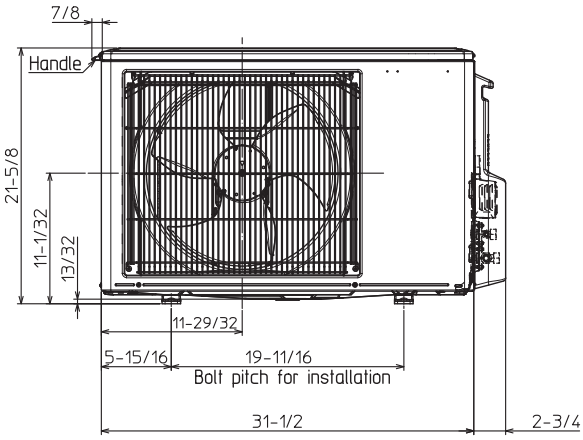

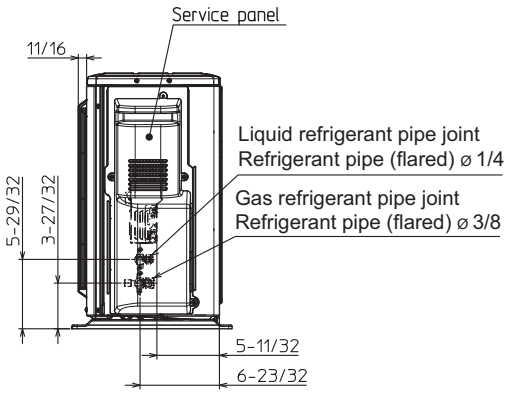

1340 Satellite Boulevard, Suwanee, GA 30024
Toll Free: 800-433-4822 www.mehvac.com

FORM# MSZ-FH09NA / MUZ-FH09NA - 202103

Specifications are subject to change without notice.

© 2021 Mitsubishi Electric Trane HVAC US LLC. All rights reserved.