# PEAD-A30AA9 & PUZ-A30NHA7
## MID STATIC HORIZONTAL-DUCTED INDOOR UNIT
## 30,000 BTU/H HEAT PUMP UNIVERSAL OUTDOOR

American Standard HEATING & AIR CONDITIONING

MITSUBISHI ELECTRIC

Job Name:

System Reference: Date:

Indoor Unit ..... PEAD-A30AA9

Outdoor Unit ..... PUZ-A30NHA7

INDOOR UNIT FEATURES

- Unobtrusive ceiling-concealed design for short-run ductwork
- Wide ranging external static pressure (0.14-0.60 in. WG)
- Built-in condensate lift mechanism (up to 27-9/16”)
- Auto fan speed mode
- Optional FB Series filter boxes for easy access and service
- Ideal for residential homes, retail shopping centers, larger classrooms, office complexes, conference rooms, ballrooms, fitness centers, and more
- Multiple control options available:
  - kumo cloud® smart device app for remote access
  - Third-party interface options
  - Wired or wireless controllers

OUTDOOR UNIT FEATURES

- Variable speed INVERTER-driven compressor
- Pre-charged with refrigerant volume for piping length up to 70 ft
- Low ambient cooling down to 0°F providing 100% capacity
- 24-hour continuous operation (cooling mode)
- High pressure protection
- Fast restart
- Superior energy and operational efficiency
- Seacoast protection*
  - External Outer Panel: Phosphate coating + Acrylic-Enamel coating
  - Fan Motor Support: Epoxy resin coating (at edge face)
  - Separator Assembly Valve Bed: Epoxy resin coating (at edge face)
  - Blue Fin treatment is an anti-corrosion treatment that is applied to the Heat exchanger coil to protect it against airborne contaminants.
  - Heat exchanger coil and base panel rated for 2,000 hours in accordance with ASTM B117 testing

*Seacoast protection standard from 2022 production

Specifications are subject to change without notice.

© 2024 Mitsubishi Electric Trane HVAC US LLC. All rights reserved.

# SPECIFICATIONS: PEAD-A30AA9 & PUZ-A30NHA7

| | | | |
|---|---|---|---|
| Cooling at 95°F[1] | Maximum Capacity | BTU/H | 30,000 |
| | Rated Capacity | BTU/H | 30,000 |
| | Minimum Capacity | BTU/H | 8,700 |
| | Maximum Power Input | W | 2,950 |
| | Rated Power Input | W | 2,950 |
| | Moisture Removal | Pints/h | 8.6 |
| | Sensible Heat Factor | | 0.68 |
| | Power Factor [208V / 230V] | % | 93.0 / 93.0 |
| Heating at 47°F[2] | Maximum Capacity | BTU/H | 32,800 |
| | Rated Capacity | BTU/H | 30,800 |
| | Minimum Capacity | BTU/H | 9,500 |
| | Maximum Power Input | W | 2,600 |
| | Rated Power Input | W | 2,550 |
| | Power Factor [208V / 230V] | % | 93.0 / 93.0 |
| Heating at 17°F[3] | Maximum Capacity | BTU/H | 19,000 |
| | Rated Capacity | BTU/H | 19,000 |
| | Maximum Power Input | W | 2,000 |
| | Rated Power Input | W | 2,000 |
| Heating at 5°F[4] | Maximum Capacity | BTU/H | 17,700 |
| | Maximum Power Input | W | 1,820 |
| Heating at -4°F[5] | Maximum Capacity | BTU/H | 15,100 |
| Efficiency | SEER2 | | 19.2 |
| | EER2[1] | | 10.1 |
| | HSPF2 [IV] | | 9.3 |
| | COP at 47°F[2] | | 3.5 |
| | COP at 17°F at Maximum Capacity[3] | | 2.7 |
| | COP at 5°F at Maximum Capacity[4] | | 2.9 |
| | COP at -4°F at Maximum Capacity[5] | | 2.7 |
| | ENERGY STAR® Certified | | No |
| Electrical | Voltage, Phase, Frequency | | 208/230, 1, 60 |
| | Guaranteed Voltage Range | V AC | 198 - 253 |
| | Voltage: Indoor - Outdoor, S1-S2 | V AC | 208/230 |
| | Voltage: Indoor - Outdoor, S2-S3 | V DC | 24 |
| | Short-circuit Current Rating [SCCR] | kA | 5 |
| | Recommended Fuse/Breaker Size (Outdoor) | A | 25 |
| | Recommended Wire Size [Indoor - Outdoor] | AWG | 12 |
| | Power Supply | | Indoor unit is powered by the outdoor unit |
| Indoor Unit | MCA | A | 2.25 |
| | Fan Motor Full Load Amperage | A | 1.80 |
| | Fan Motor Output | W | 121 |
| | Fan Motor Type | | DC Motor |
| | Airflow Rate at Cooling, Dry | CFM | 618–671–742–883 |
| | Airflow Rate at Heating, Dry | CFM | 618–671–742–883 |
| | Sound Pressure Level [Cooling] | dB[A] | 30–32–34–38 |
| | Sound Pressure Level [Heating] | dB[A] | 30–32–34–38 |
| | External Static Pressure | in.WG | 0.14–0.2–0.28–0.4–0.6 |
| | Drain Pipe Size | In. [mm] | 1-1/4 [32] |
| | Condensate Lift Mechanism, Maximum Distance | In. [mm] | 27-9/16 [700] |
| | Coating on Heat Exchanger | | — |
| | External Finish Color | | Galvanized |
| | Unit Dimensions | W x D x H: In. [mm] | 43-5/16 x 28-7/8 x 9-7/8 [1,100 x 732 x 250] |
| | Package Dimensions | W x D x H: In. [mm] | 53-15/16 x 35-7/16 x 13 [1,370 x 900 x 330] |
| | Unit Weight | Lbs. [kg] | 67 [30] |
| | Package Weight | Lbs. [kg] | 78 [35] |
| Indoor Unit Operating Temperature Range | Cooling Intake Air Temp [Maximum / Minimum]* | °F | 95 DB, 71 WB / 67 DB, 57 WB |
| | Heating Intake Air Temp [Maximum / Minimum] | °F | 80 DB / 70 DB |

NOTES:

| | | | |
|---|---|---|---|
| AHRI Rated Conditions (Rated data is determined at a fixed compressor speed) | [1]Cooling (Indoor // Outdoor) | °F | 80 DB, 67 WB // 95 DB, 75 WB |
| | [2]Heating at 47°F (Indoor // Outdoor) | °F | 70 DB, 60 WB // 47 DB, 43 WB |
| | [3]Heating at 17°F (Indoor // Outdoor) | °F | 70 DB, 60 WB // 17 DB, 15 WB |
| Conditions | [4]Heating at 5°F (Indoor // Outdoor) | °F | 70 DB, 60 WB // 5 DB, 4 WB |

*Indoor/Outdoor Unit Operating Temperature Range (Cooling Air Temp [Maximum / Minimum]):
- Applications should be restricted to comfort cooling only; equipment cooling applications are not recommended for low ambient temperature conditions.
  - » Wind baffles required to operate below 23°F DB in cooling mode.
  - » Heat pump system with wind baffle: 0°F - 115°F.
  - » Refer to wind baffle documentation for further information.

**Outdoor Unit Operating Temperature Range (Cooling Thermal Lock-out / Re-start Temperatures; Heating Thermal Lock-out / Re-start Temperatures):
- System cuts out in heating mode to avoid thermistor error and automatically restarts at these temperatures.

***Blue Fin Coating Standard from 2022 production:
- PU(Y/Z)-A(12/18)NKA7 - Beginning with serial number 12U*****
- PU(Y/Z)-A(24/30/36/42)NKA7 - Beginning with serial number 1ZU*****

Specifications are subject to change without notice.

© 2024 Mitsubishi Electric Trane HVAC US LLC. All rights reserved.

# SPECIFICATIONS: PEAD-A30AA9 & PUZ-A30NHA7

| | | | |
|---|---|---|---|
| Outdoor Unit | MCA | A | 19.0 |
| | MOCP | A | 26 |
| | Fan Motor Output | W | 74 |
| | Airflow Rate [Cooling / Heating] | CFM | 1940 / 1940 |
| | Refrigerant Control | | Linear expansive valve |
| | Defrost Method | | Reverse Cycle |
| | Coating on Heat Exchanger | | Blue Fin Coating*** |
| | Sound Pressure Level, Cooling[1] | dB(A) | 47 |
| | Sound Pressure Level, Heating[2] | dB(A) | 48 |
| | Compressor Type | | DC INVERTER-driven Twin Rotary |
| | Compressor Model | | SNB172FWHM1 |
| | Compressor Rated Load Amps | A | 7 |
| | Compressor Locked Rotor Amps | A | 11.0 |
| | Compressor Oil [Type // Charge] | oz. | FV50S // 23 |
| | External Finish Color | | Ivory Munsell 3Y 7.8/1.1 |
| | Base Pan Heater | | N/A |
| | Unit Dimensions | W x D x H: In. [mm] | 37-13/32 x 13 (+1-3/16) x 37-1/8 [950 x 330 (+30) x 943] |
| | Package Dimensions | W x D x H: In. [mm] | 41 x 18 x 43 [1040 x 450 x 1079] |
| | Unit Weight | Lbs. [kg] | 153 [69] |
| | Package Weight | Lbs. [kg] | 179 [81] |
| Outdoor Unit Operating Temperature Range | Cooling Air Temp [Maximum / Minimum]* | °F | 115 DB / 0 DB |
| | Heating Air Temp [Maximum / Minimum] | °F | 70 DB, 59 WB / 12 DB, -4 WB |
| | Heating Thermal Lock-out / Re-start Temperatures** | °F | -13 / -4 |
| Refrigerant | Type | | R410A |
| | Pre-Charged Refrigerant Amount | Lbs, oz | 7.0, 11.0 |
| | Maximum Pre-Charged Piping Length | Ft. [m] | 70.0 [21.0] |
| | Additional Refrigerant Charge Per Additional Piping Length | oz./Ft. [g/m] | 3.5 [65] |
| Piping | Gas Pipe Size O.D. [Flared] | In.[mm] | 5/8 [15.88] |
| | Liquid Pipe Size O.D. [Flared] | In.[mm] | 3/8 [9.52] |
| | Maximum Piping Length | Ft. [m] | 165 [50] |
| | Maximum Height Difference | Ft. [m] | 100 [30] |
| | Maximum Number of Bends | | 15 |

NOTES:

| | | | |
|---|---|---|---|
| AHRI Rated Conditions (Rated data is determined at a fixed compressor speed) | [1]Cooling (Indoor // Outdoor) | °F | 80 DB, 67 WB // 95 DB, 75 WB |
| | [2]Heating at 47°F (Indoor // Outdoor) | °F | 70 DB, 60 WB // 47 DB, 43 WB |
| | [3]Heating at 17°F (Indoor // Outdoor) | °F | 70 DB, 60 WB // 17 DB, 15 WB |
| Conditions | [4]Heating at 5°F (Indoor // Outdoor) | °F | 70 DB, 60 WB // 5 DB, 4 WB |

*Indoor/Outdoor Unit Operating Temperature Range (Cooling Air Temp [Maximum / Minimum]):
- Applications should be restricted to comfort cooling only; equipment cooling applications are not recommended for low ambient temperature conditions.
  - » Wind baffles required to operate below 23°F DB in cooling mode.
  - » Heat pump system with wind baffle: 0°F - 115°F.
  - » Refer to wind baffle documentation for further information.

**Outdoor Unit Operating Temperature Range (Cooling Thermal Lock-out / Re-start Temperatures; Heating Thermal Lock-out / Re-start Temperatures):
- System cuts out in heating mode to avoid thermistor error and automatically restarts at these temperatures.

***Blue Fin Coating Standard from 2022 production:
- PU(Y/Z)-A(12/18)NKA7 - Beginning with serial number 12U*****
- PU(Y/Z)-A(24/30/36/42)NKA7 - Beginning with serial number 1ZU*****


© 2024 Mitsubishi Electric Trane HVAC US LLC. All rights reserved.

# INDOOR UNIT ACCESSORIES: PEAD-A30AA9

| | | |
|---|---|---|
| Control Interface | Airzone Wired Blueface Controller (White) | ☐ AZZBSBLUEZEROCB |
| | Airzone Wired Lite Controller (White) | ☐ AZZBSLITECB |
| | Airzone Wireless Lite Controller (White) | ☐ AZZBSLITERB |
| | Airzone Wireless Think Controller (White) | ☐ AZZBSTHINKRB |
| | Backup Heat Relay Kit Adapter for CN24 or CN152 on ducted models | ☐ CN24RELAY-KIT-CM3 |
| | IT Extender for kumo station™ | ☐ PAC-WHS01IE-E |
| | kumo station™ for kumo cloud® | ☐ TAC-WHS01HC-E |
| | On/Off Input Adapter for CN32 and Forced Fan Operation Input Adapter for SWE | ☐ PAC-715AD |
| | Operation and Error Status Output Adapter | ☐ PAC-SF40RM-E |
| | Procon BACnet® and Modbus® Interface | ☐ PAC-UKPRC001-CN-1 |
| | Thermostat Interface for 3rd Party Thermostats | ☐ PAC-US445CN-1 |
| | USNAP Adapter for Demand Response | ☐ PAC-WHS01UP-E |
| | Wireless Interface for kumo cloud® | ☐ PAC-USWHS002-WF-2 |
| Remote Sensor | Flush Mount Remote Temperature Sensor for SEZ, SLZ, SVZ and all P-Series models | ☐ PAC-USSEN002-FM-1 |
| | Wall Mount Remote Temperature Sensor | ☐ PAC-SE41TS-E |
| | Wireless temperature and humidity sensor for kumo cloud® | ☐ PAC-USWHS003-TH-1 |
| Wired Remote Controller | Deluxe MA Wired Remote Controller† | ☐ AAR-41MAAU |
| | Simple Ductless Wired Remote Controller | ☐ PAC-SDW01RC-1 |
| | Simple MA Remote Controller | ☐ PAC-YT53CRAU-J |
| | Touch MA Wired Remote Controller | ☐ PAR-CT01MAU-SB |
| Wireless Remote Controller | kumo touch™ RedLINK™ Wireless Controller & Receiver kit | ☐ MHK2 |
| | Lockdown Bracket for Wireless Handheld Remote Controllers | ☐ RCMKP1CB |
| | Universal Wireless MA Handheld Remote Controller | ☐ PAR-FL32MA-E |
| | Universal Wireless Receiver for PAR-FL32MA-E | ☐ PAR-SR32MA-E |
| | Wireless Signal Receiver | ☐ PAR-SA9CA-E |
| Condensate | Blue Diamond (Advanced) Mini Condensate Pump w/ Reservoir & Sensor (208/230V) [recommended] | ☐ X87-721 |
| | Blue Diamond (MegaBlue Advanced) Condensate Pump w/ Reservoir & Sensor | ☐ X87-835 |
| | Blue Diamond Sensor Extension Cable — 15 Ft. | ☐ C13-103 |
| | Refco Condensate Pump (100-240 VAC) up to 120,000 BTU/H | ☐ COMBI |
| Control Wire | 20/2PR, 1PR shielded + 1PR plenum wire for Airzone, 100 ft reel | ☐ CW2042S2-100 |
| | 20/2PR, shielded + 1PR plenum wire for Airzone, 500 ft reel | ☐ CW2042S2-500 |
| Disconnect Switch | (30A/600V/UL) [fits 2” X 4” utility box] - Black | ☐ TAZ-MS303 |
| | (30A/600V/UL) [fits 2” X 4” utility box] - White | ☐ TAZ-MS303W |
| Filter Box | Filter Box with MERV 13 Filter | ☐ FBM2-3-A |
| Lineset | | ☐ Lineset 3/8x5/8 |
| | 10’ x 3/8” x 10’ x 5/8” Lineset (Twin-Tube Insulation) | ☐ MPLS385812T-10 |
| | 100’ x 3/8” x 100’ x 5/8” Lineset (Twin-Tube Insulation) | ☐ MPLS385812T-100 |
| | 15’ x 3/8” x 15’ x 5/8” Lineset (Twin-Tube Insulation) | ☐ MPLS385812T-15 |
| | 30’ x 3/8” x 30’ x 5/8” Lineset (Twin-Tube Insulation) | ☐ MPLS385812T-30 |
| | 50’ x 3/8” x 50’ x 5/8” Lineset (Twin-Tube Insulation) | ☐ MPLS385812T-50 |
| | 65’ x 3/8” x 65’ x 5/8” Lineset (Twin-Tube Insulation) | ☐ MPLS385812T-65 |

NOTES:
‡PAC-SF40RM-E (Unable to use with wireless remote controller)


© 2024 Mitsubishi Electric Trane HVAC US LLC. All rights reserved.

# OUTDOOR UNIT ACCESSORIES: PUZ-A30NHA7

| | | |
|---|---|---|
| Air Outlet Guide | Air Outlet Guide (1 Piece) | ☐ PAC-SG59SG-E |
| Centralized Drain Pan | Drain Pan | ☐ PAC-SG64DP-E |
| Control/Service Tool | Control/Service Tool | ☐ PAC-SK52ST |
| | M- & P-Series Maintenance Tool Cable Set | ☐ M21EC0397 |
| | USB Conversion Cable for PAC-USCMS-MN-1 | ☐ M21EC1397 |
| Hail Guards | Hail Guard | ☐ HG-A6 |
| M-NET Converter | M-NET Converter | ☐ PAC-SJ95MA-E |
| | M-Net Interface for P-Series | ☐ PAC-SJ85MA-E |
| Mini-Split Wire | 14 Gauge, 4 wire MiniSplit Cable—250 ft. roll | ☐ S144-250 |
| | 14 Gauge, 4 wire MiniSplit Cable—250 ft. roll | ☐ SW144-250 |
| | 14 Gauge, 4 wire MiniSplit Cable—50 ft. roll | ☐ S144-50 |
| | 14 Gauge, 4 wire MiniSplit Cable—50 ft. roll | ☐ SW144-50 |
| | 16 Gauge, 4 wire MiniSplit Cable—250 ft. roll | ☐ S164-250 |
| | 16 Gauge, 4 wire MiniSplit Cable—250 ft. roll | ☐ SW164-250 |
| | 16 Gauge, 4 wire MiniSplit Cable—50 ft. roll | ☐ S164-50 |
| | 16 Gauge, 4 wire MiniSplit Cable—50 ft. roll | ☐ SW164-50 |
| Mounting Pad | Condensing Unit Mounting Pad: 24” x 42” x 3” | ☐ ULTRILITE2 |
| Snow/Rain Diverter | Snow/Rain Diverter | ☐ SRD-4 |
| Stand | 18” Single Fan Stand | ☐ QSMS1801M |
| | 24” Single Fan Stand | ☐ QSMS2401M |
| | Condenser Wall Bracket | ☐ QSWB2000M-1 |
| | Condenser Wall Bracket - Stainless Steel Finish | ☐ QSWBSS |
| | Outdoor Unit Stand — 12” High | ☐ QSMS1201M |
| Wind Baffle | Front Wind Baffle | ☐ WB-PA5 |
| | Rear Wind Baffle | ☐ WB-RE5 |
| | Side Advanced Wind Baffle | ☐ WB-SD5 |


© 2024 Mitsubishi Electric Trane HVAC US LLC. All rights reserved.

# INDOOR UNIT DIMENSIONS: PEAD-A30AA9

## INDOOR UNIT

### PEAD-A09, 12, 15, 18, 24, 30, 36, 42AA9

Notes
1. Use an M10 screw for the suspension bolt (field supply).
2. Keep the service space for maintenance at the bottom.
3. This drawing is for PEAD-A09·12·15·18·24·30AA9 models,which have 2 fans. PEAD-A36·42AA9 models have 3 fans.
4. If the inlet duct is used,remove the air filter(supplied with the unit),then install the filter(field supply) at the suction side.
5. Heat air to 0°C(32°F) or higher when taking fresh air with a fresh air intake.

Unit:mm(in.)

| Model | J | ①Gas pipe | ②Liquid pipe |
|---|---|---|---|
| PEAD-A09AA9 | 62 (2-1/2) | ø9.52 (3/8) | ø6.35 (1/4) |
| PEAD-A12,15, 18AA9 | | ø12.7 (1/2) | |
| PEAD-A24,30AA9 | 66 (2-5/8) | ø15.88 (5/8) | ø9.52 (3/8) |
| PEAD-A36,42AA9 | | | |

Unit:mm(in.)

| Model | A | B | C | D | E | F | G | H |
|---|---|---|---|---|---|---|---|---|
| PEAD-A09,12, 15,18AA9 | 900 (35-7/16) | 954 (37-9/16) | 1000 (39-3/8) | 860 (33-7/8) | 9 | 800 (31-1/2) | 858 (33-13/16) | 72 (2-7/8) |
| PEAD-A24,30AA9 | 1100 (43-5/16) | 1154 (45-7/16) | 1200 (47-1/4) | 1060 (41-3/4) | 11 | 1000 (39-3/8) | 1058 (41-11/16) | 78 (3-1/8) |
| PEAD-A36,42AA9 | 1400 (55-1/8) | 1454 (57-1/4) | 1500 (59-1/16) | 1360 (53-9/16) | 14 | 1300 (51-3/16) | 1358 (53-1/2) | |

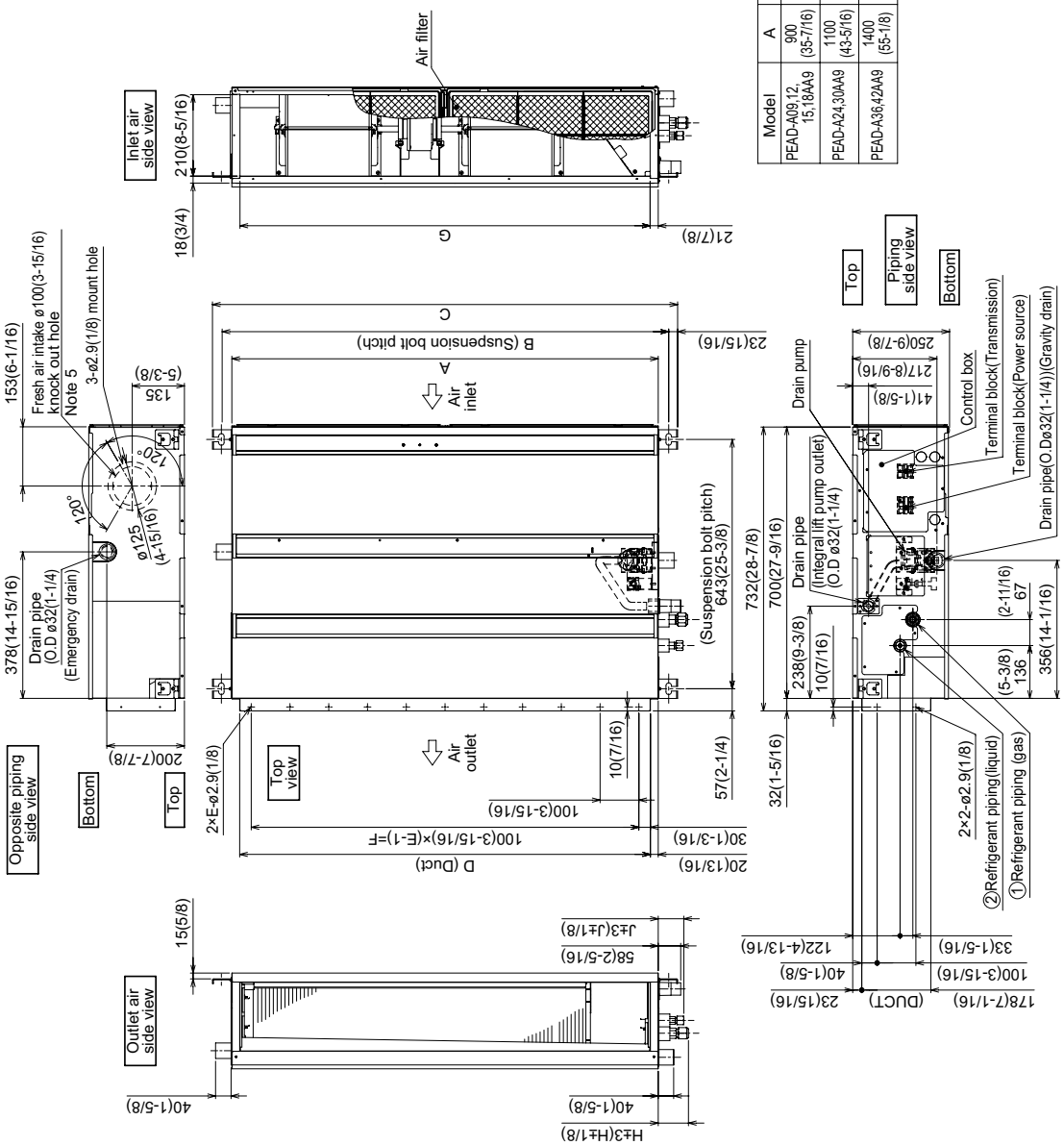




© 2024 Mitsubishi Electric Trane HVAC US LLC. All rights reserved.

# OUTDOOR UNIT DIMENSIONS: PUZ-A30NHA7

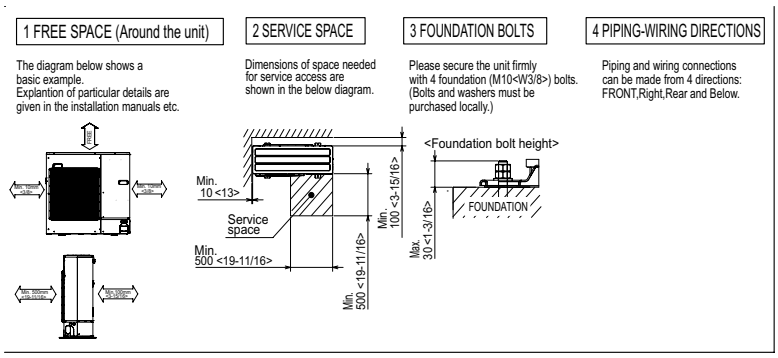


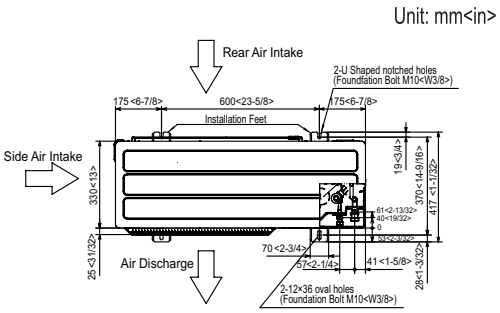


## Example of Notes

① ··· Refrigerant GAS pipe connection (FLARE) ø15.88(5/8F)
② ··· Refrigerant LIQUID pipe connection (FLARE) ø 9.52(3/8F)
*1··· Indication of STOP VALVE connection location.

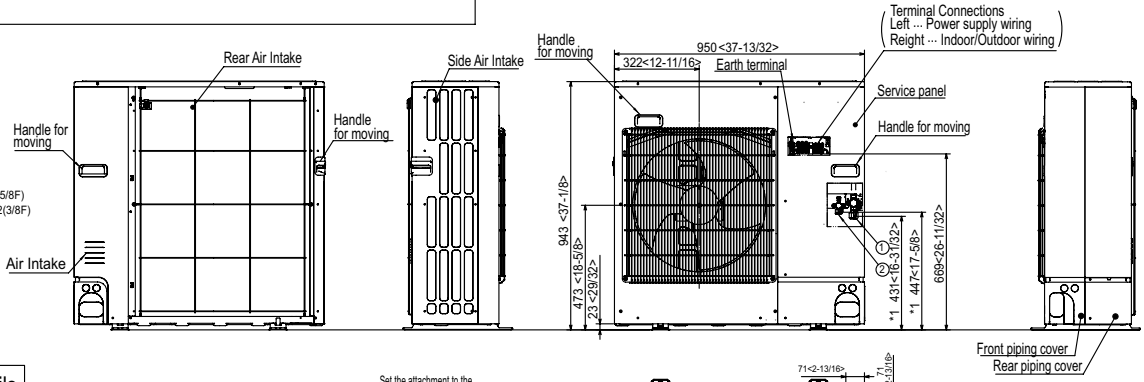


## Piping knockout Hole Details

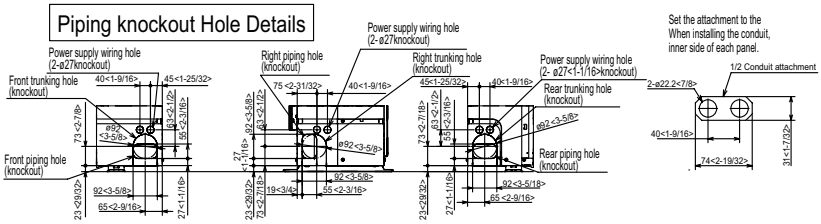


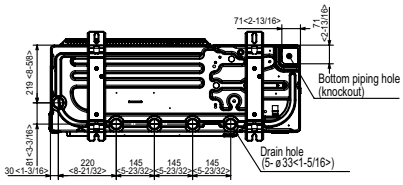


FORM# PEAD-A30AA9 & PUZ-A30NHA7 - 202408

Specifications are subject to change without notice.

© 2024 Mitsubishi Electric Trane HVAC US LLC. All rights reserved.