PEAD-A18AA9 & PUY-A18NKA7
MID STATIC HORIZONTAL-DUCTED INDOOR UNIT
18,000 BTU/H COOLING ONLY OUTDOOR

American Standard HEATING & AIR CONDITIONING

MITSUBISHI ELECTRIC

Job Name:	
System Reference:	Date:

Indoor Unit PEAD-A18AA9

Outdoor Unit PUY-A18NKA7

INDOOR UNIT FEATURES

- Unobtrusive ceiling-concealed design for short-run ductwork
- Wide ranging external static pressure (0.14-0.60 in. WG)
- Built-in condensate lift mechanism (up to 27-9/16”)
- Auto fan speed mode
- Optional FB Series filter boxes for easy access and service
- Ideal for residential homes, retail shopping centers, larger classrooms, office complexes, conference rooms, ballrooms, fitness centers, and more
- Multiple control options available:
  - kumo cloud® smart device app for remote access
  - Third-party interface options
  - Wired or wireless controllers

OUTDOOR UNIT FEATURES

- Variable speed INVERTER-driven compressor
- Pre-charged with refrigerant volume for piping length up to 70 ft
- Low ambient cooling down to -40°F providing 100% capacity (with wind baffles)
- 24-hour continuous operation (cooling mode)
- High pressure protection
- Fast restart
- Superior energy and operational efficiency
- Seacoast protection*
  - External Outer Panel: Phosphate coating + Acrylic-Enamel coating
  - Fan Motor Support: Epoxy resin coating (at edge face)
  - Separator Assembly Valve Bed: Epoxy resin coating (at edge face)
  - Blue Fin treatment is an anti-corrosion treatment that is applied to the Heat exchanger coil to protect it against airborne contaminants.
  - Heat exchanger coil and base panel rated for 2,000 hours in accordance with ASTM B117 testing

*Seacoast protection standard from 2022 production

Specifications are subject to change without notice.

© 2024 Mitsubishi Electric Trane HVAC US LLC. All rights reserved.

SPECIFICATIONS: PEAD-A18AA9 & PUY-A18NKA7

Cooling at 95°F[1]	Maximum Capacity	BTU/H	18,000
	Rated Capacity	BTU/H	18,000
	Minimum Capacity	BTU/H	7,800
	Maximum Power Input	W	1,660
	Rated Power Input	W	1,660
	Moisture Removal	Pints/h	3.7
	Sensible Heat Factor		0.77
	Power Factor [208V / 230V]	%	91.0 / 91.0
Efficiency	SEER2		19.8
	EER2[1]		10.8
	HSPF2 [IV]		—
	ENERGY STAR® Certified		No
Electrical	Voltage, Phase, Frequency		208/230, 1, 60
	Guaranteed Voltage Range	V AC	198 - 253
	Voltage: Indoor - Outdoor, S1-S2	V AC	208/230
	Voltage: Indoor - Outdoor, S2-S3	V DC	24
	Short-circuit Current Rating [SCCR]	kA	5
	Recommended Fuse/Breaker Size (Outdoor)	A	15
	Recommended Wire Size [Indoor - Outdoor]	AWG	14
	Power Supply		Indoor unit is powered by the outdoor unit
Indoor Unit	MCA	A	2.25
	Fan Motor Full Load Amperage	A	1.80
	Fan Motor Output	W	121
	Fan Motor Type		DC Motor
	Airflow Rate at Cooling, Dry	CFM	403–424–512–600
	Sound Pressure Level [Cooling]	dB[A]	28–29–34–37
	External Static Pressure	in.WG	0.14–0.2–0.28–0.4–0.6
	Drain Pipe Size	In. [mm]	1-1/4 [32]
	Condensate Lift Mechanism, Maximum Distance	In. [mm]	27-9/16 [700]
	Coating on Heat Exchanger		—
	External Finish Color		Galvanized
	Unit Dimensions	W x D x H: In. [mm]	35-7/16 x 28-7/8 x 9-7/8 [900 x 732 x 250]
	Package Dimensions	W x D x H: In. [mm]	46-1/16 x 35-7/16 x 13 [1,170 x 900 x 330]
	Unit Weight	Lbs. [kg]	60 [27]
	Package Weight	Lbs. [kg]	71 [32]
Indoor Unit Operating Temperature Range	Cooling Intake Air Temp [Maximum / Minimum]*	°F	95 DB, 71 WB / 67 DB, 57 WB
Outdoor Unit	MCA	A	11.0
	MOCP	A	28
	Fan Motor Output	W	46
	Airflow Rate [Cooling / Heating]	CFM	1590
	Refrigerant Control		Linear expansive valve
	Defrost Method		Reverse Cycle
	Coating on Heat Exchanger		Blue Fin Coating***
	Sound Pressure Level, Cooling[1]	dB(A)	44
	Compressor Type		DC INVERTER-driven Twin Rotary
	Compressor Model		SNB130FQCMC-L1
	Compressor Rated Load Amps	A	7
	Compressor Locked Rotor Amps	A	12.0
	Compressor Oil [Type // Charge]	oz.	FV50S // 16
	External Finish Color		Ivory Munsell 3Y 7.8/1.1
	Base Pan Heater		N/A
	Unit Dimensions	W x D x H: In. [mm]	31-13/16+2-7/16 x 11-13/16 x 24-13/16 [809 (+62) x 300 x 630]
	Package Dimensions	W x D x H: In. [mm]	38 x 17 x 33 [941 x 411 x 819]
	Unit Weight	Lbs. [kg]	99 [44]
	Package Weight	Lbs. [kg]	111 [50]
Outdoor Unit Operating Temperature Range	Cooling Air Temp [Maximum / Minimum]*	°F	115 DB / -20 DB
Refrigerant	Type		R410A
	Pre-Charged Refrigerant Amount	Lbs, oz	4.0, 14.0
	Maximum Pre-Charged Piping Length	Ft. [m]	70.0 [21.0]
	Additional Refrigerant Charge Per Additional Piping Length	oz./Ft. [g/m]	0.5 [10]
Piping	Gas Pipe Size O.D. [Flared]	In.[mm]	1/2 [12.7]
	Liquid Pipe Size O.D. [Flared]	In.[mm]	1/4 [6.35]
	Maximum Piping Length	Ft. [m]	165 [50]
	Maximum Height Difference	Ft. [m]	100 [30]
	Maximum Number of Bends		15

NOTES:
AHRI Rated Conditions
(Rated data is determined at a fixed compressor speed) [1]Cooling (Indoor // Outdoor) °F 80 DB, 67 WB // 95 DB, 75 WB

*Indoor/Outdoor Unit Operating Temperature Range (Cooling Air Temp [Maximum / Minimum]):
- Wind baffles required to operate below 23°F DB in cooling mode.
- Cooling-only system with advanced wind baffle: -40°F - 115°F.
- Refer to wind baffle documentation for further information.

***Blue Fin Coating Standard from 2022 production:
- PU(Y/Z)-A(12/18)NKA7 - Beginning with serial number 12U*****
- PU(Y/Z)-A(24/30/36/42)NKA7 - Beginning with serial number 1ZU*****

Specifications are subject to change without notice.

© 2024 Mitsubishi Electric Trane HVAC US LLC. All rights reserved.

INDOOR UNIT ACCESSORIES: PEAD-A18AA9

Control Interface	Airzone Wired Blueface Controller (White)	☐ AZZBSBLUEZEROCB
	Airzone Wired Lite Controller (White)	☐ AZZBSLITECB
	Airzone Wireless Lite Controller (White)	☐ AZZBSLITERB
	Airzone Wireless Think Controller (White)	☐ AZZBSTHINKRB
	Backup Heat Relay Kit Adapter for CN24 or CN152 on ducted models	☐ CN24RELAY-KIT-CM3
	IT Extender for kumo station™	☐ PAC-WHS01IE-E
	kumo station™ for kumo cloud®	☐ TAC-WHS01HC-E
	On/Off Input Adapter for CN32 and Forced Fan Operation Input Adapter for SWE	☐ PAC-715AD
	Operation and Error Status Output Adapter	☐ PAC-SF40RM-E
	Procon BACnet® and Modbus® Interface	☐ PAC-UKPRC001-CN-1
	Thermostat Interface for 3rd Party Thermostats	☐ PAC-US445CN-1
	USNAP Adapter for Demand Response	☐ PAC-WHS01UP-E
	Wireless Interface for kumo cloud®	☐ PAC-USWHS002-WF-2
Remote Sensor	Flush Mount Remote Temperature Sensor for SEZ, SLZ, SVZ and all P-Series models	☐ PAC-USSEN002-FM-1
	Wall Mount Remote Temperature Sensor	☐ PAC-SE41TS-E
	Wireless temperature and humidity sensor for kumo cloud®	☐ PAC-USWHS003-TH-1
Wired Remote Controller	Deluxe MA Wired Remote Controller†	☐ AAR-41MAAU
	Simple Ductless Wired Remote Controller	☐ PAC-SDW01RC-1
	Simple MA Remote Controller	☐ PAC-YT53CRAU-J
	Touch MA Wired Remote Controller	☐ PAR-CT01MAU-SB
Wireless Remote Controller	kumo touch™ RedLINK™ Wireless Controller & Receiver kit	☐ MHK2
	Lockdown Bracket for Wireless Handheld Remote Controllers	☐ RCMKP1CB
	Universal Wireless MA Handheld Remote Controller	☐ PAR-FL32MA-E
	Universal Wireless Receiver for PAR-FL32MA-E	☐ PAR-SR32MA-E
	Wireless Signal Receiver	☐ PAR-SA9CA-E
Condensate	Blue Diamond (Advanced) Mini Condensate Pump w/ Reservoir & Sensor (208/230V) [recommended]	☐ X87-721
	Blue Diamond (MicroBlue) Mini Condensate Pump (110/208/230V) up to 18,000 BTU/H	☐ X86-003
	Blue Diamond Sensor Extension Cable — 15 Ft.	☐ C13-103
	Refco Condensate Pump (100-240 VAC) up to 120,000 BTU/H	☐ COMBI
Control Wire	20/2PR, 1PR shielded + 1PR plenum wire for Airzone, 100 ft reel	☐ CW2042S2-100
	20/2PR, shielded + 1PR plenum wire for Airzone, 500 ft reel	☐ CW2042S2-500
Disconnect Switch	(30A/600V/UL) [fits 2” X 4” utility box] - Black	☐ TAZ-MS303
	(30A/600V/UL) [fits 2” X 4” utility box] - White	☐ TAZ-MS303W
Filter Box	Filter Box with MERV 13 Filter	☐ FBM2-2-A
Lineset		☐ Lineset 1/4x1/2
	100’ x 1/4” x 100’ / 1/2” Lineset (Twin-Tube Insulation)	☐ MLS141212T-100
	15’ x 1/4” x 15’ / 1/2” Lineset (Twin-Tube Insulation)	☐ MLS141212T-15
	30’ x 1/4” x 30’ / 1/2” Lineset (Twin-Tube Insulation)	☐ MLS141212T-30
	50’ x 1/4” x 50’ / 1/2” Lineset (Twin-Tube Insulation)	☐ MLS141212T-50
	65’ x 1/4” x 65’ / 1/2” Lineset (Twin-Tube Insulation)	☐ MLS141212T-65

NOTES:
‡PAC-SF40RM-E (Unable to use with wireless remote controller)

© 2024 Mitsubishi Electric Trane HVAC US LLC. All rights reserved.

OUTDOOR UNIT ACCESSORIES: PUY-A18NKA7

Air Outlet Guide	Air Outlet Guide	☐ PAC-SJ07SG-E
Centralized Drain Pan	Centralized Drain Pan	☐ PAC-SG63DP-E
Control/Service Tool	Control/Service Tool	☐ PAC-SK52ST
	M- & P-Series Maintenance Tool Cable Set	☐ M21EC0397
	USB Conversion Cable for PAC-USCMS-MN-1	☐ M21EC1397
Drain Socket	Drain Socket	☐ MAC-871DS
Hail Guards	Hail Guard	☐ HG-A5
M-NET Converter	M-NET Interface for PUZ-A-NKA7 12 & 18 outdoor units	☐ PAC-SJ96MA-E
Mini-Split Wire	14 Gauge, 4 wire MiniSplit Cable—250 ft. roll	☐ S144-250
	14 Gauge, 4 wire MiniSplit Cable—250 ft. roll	☐ SW144-250
	14 Gauge, 4 wire MiniSplit Cable—50 ft. roll	☐ S144-50
	14 Gauge, 4 wire MiniSplit Cable—50 ft. roll	☐ SW144-50
	16 Gauge, 4 wire MiniSplit Cable—250 ft. roll	☐ S164-250
	16 Gauge, 4 wire MiniSplit Cable—250 ft. roll	☐ SW164-250
	16 Gauge, 4 wire MiniSplit Cable—50 ft. roll	☐ S164-50
	16 Gauge, 4 wire MiniSplit Cable—50 ft. roll	☐ SW164-50
Mounting Pad	Condensing Unit Mounting Pad: 16” x 36” x 3”	☐ ULTRILITE1
Snow/Rain Diverter	Snow/Rain Diverter	☐ SRD-2
Stand	18” Single Fan Stand	☐ QSMS1801M
	24” Single Fan Stand	☐ QSMS2401M
	Condenser Wall Bracket	☐ QSWB2000M-1
	Condenser Wall Bracket - Stainless Steel Finish	☐ QSWBSS
	Outdoor Unit Stand — 12” High	☐ QSMS1201M
Wind Baffle	Front Wind Baffle	☐ WB-PA4
	Rear Wind Baffle	☐ WB-RE4
	Side Advanced Wind Baffle	☐ WB-SD4

© 2024 Mitsubishi Electric Trane HVAC US LLC. All rights reserved.

INDOOR UNIT DIMENSIONS: PEAD-A18AA9

INDOOR UNIT

PEAD-A09, 12, 15, 18, 24, 30, 36, 42AA9

Notes 1.Use an M10 screw for the suspension bolt (field supply).
2.Keep the service space for maintenance at the bottom.
3.This drawing is for PEAD-A09·12·15·18·24·30AA9 models,which have 2 fans. PEAD-A36·42AA9 models have 3 fans.
4.If the inlet duct is used,remove the air filter(supplied with the unit),then install the filter(field supply) at the suction side.
5.Heat air to 0°C(32°F) or higher when taking fresh air with a fresh air intake.

Unit:mm(in.)

Model	J	①Gas pipe	②Liquid pipe
PEAD-A09AA9	62 (2-1/2)	ø9.52 (3/8)	ø6.35 (1/4)
PEAD-A12,15, 18AA9		ø12.7 (1/2)	
PEAD-A24,30AA9	66 (2-5/8)	ø15.88 (5/8)	ø9.52 (3/8)
PEAD-A36,42AA9			

Unit:mm(in.)

Model	A	B	C	D	E	F	G	H
PEAD-A09,12, 15,18AA9	900 (35-7/16)	954 (37-9/16)	1000 (39-3/8)	860 (33-7/8)	9	800 (31-1/2)	858 (33-13/16)	72 (2-7/8)
PEAD-A24,30AA9	1100 (43-5/16)	1154 (45-7/16)	1200 (47-1/4)	1060 (41-3/4)	11	1000 (39-3/8)	1058 (41-11/16)	78 (3-1/8)
PEAD-A36,42AA9	1400 (55-1/8)	1454 (57-1/4)	1500 (59-1/16)	1360 (53-9/16)	14	1300 (51-3/16)	1358 (53-1/2)	

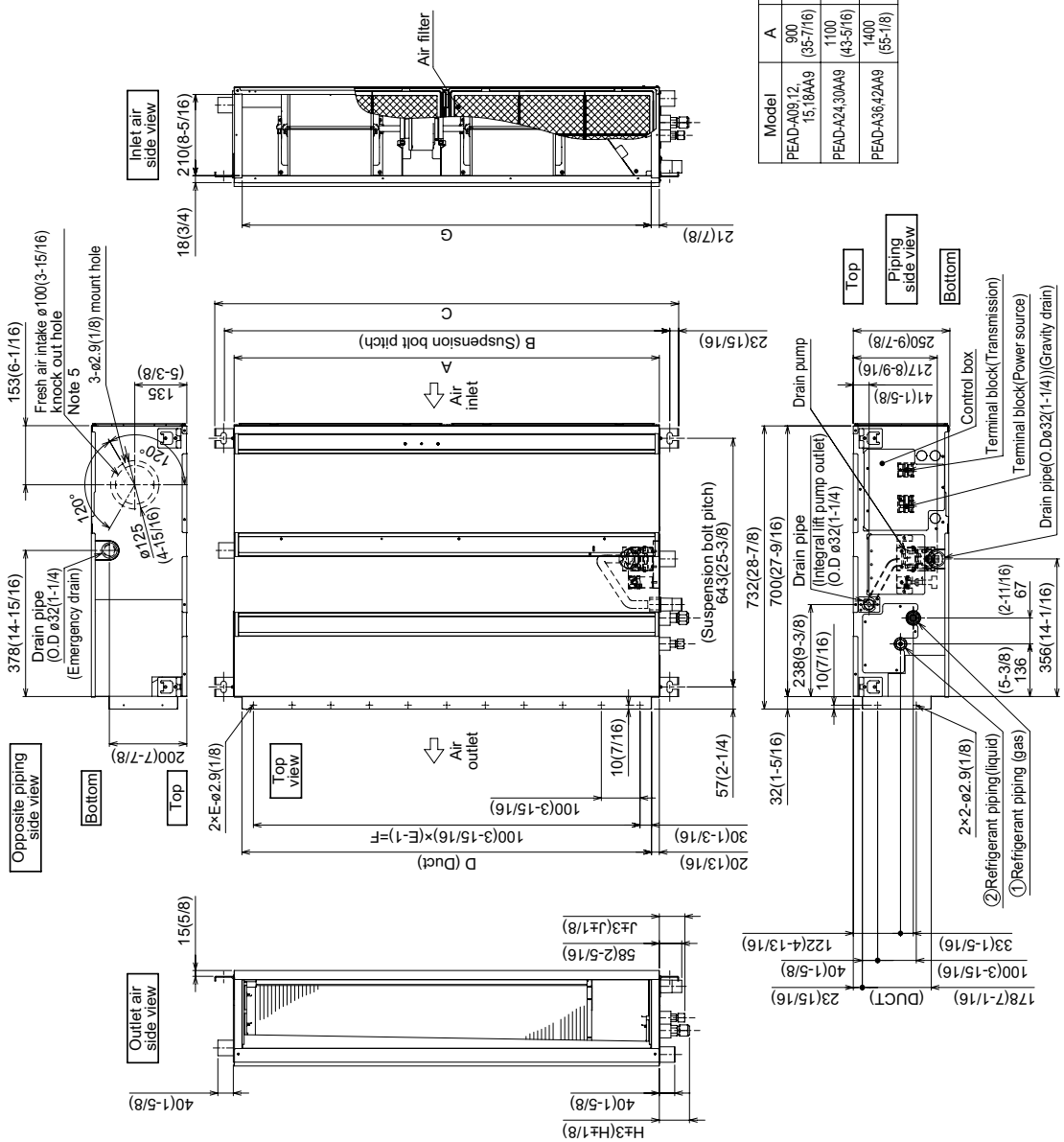

© 2024 Mitsubishi Electric Trane HVAC US LLC. All rights reserved.

OUTDOOR UNIT DIMENSIONS: PUY-A18NKA7

Unit: mm<in>

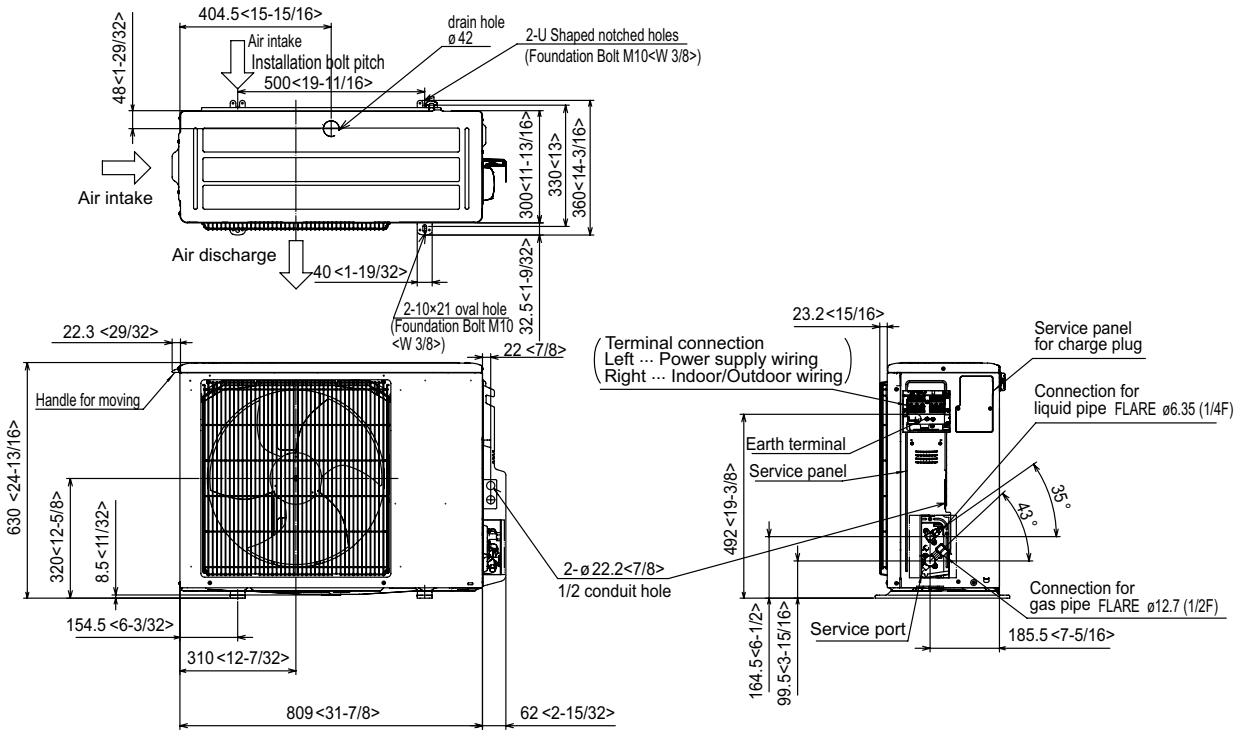

Free space around the outdoor unit (basic example)

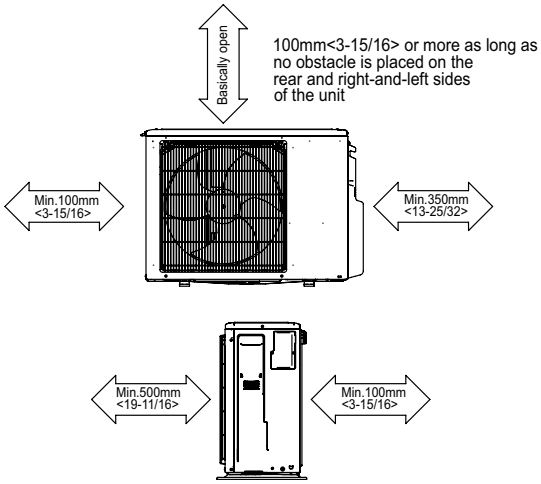

2 sides should be open in
the right, left and rear side.

FOUNDATION BOLTS

Please secure the unit firmly
with 4 foundation (M10<W3/8>) bolts.
(Bolts, washers and nut must
be purchased locally).

<Foundation bolt height>

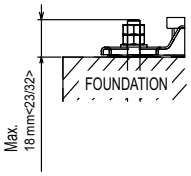

PIPING-WIRING DIRECTION

Piping and wiring connection can
be made from the rear direction only.

FORM# PEAD-A18AA9 & PUY-A18NKA7 - 202408

Specifications are subject to change without notice.

© 2024 Mitsubishi Electric Trane HVAC US LLC. All rights reserved.