American Standard
HEATING & AIR CONDITIONING

MITSUBISHI ELECTRIC

November 2019
No.OCBA709

HFC utilized
R410A

PARTS CATALOG

R410A

Outdoor unit [Model Name]	[Service Ref.]
NAXSKH09A112AA	NAXSKH09A112AA
NAXSKH12A112AA	NAXSKH12A112AA
NAXSKH15A112AA	NAXSKH15A112AA
NAXSKH18A112AA	NAXSKH18A112AA

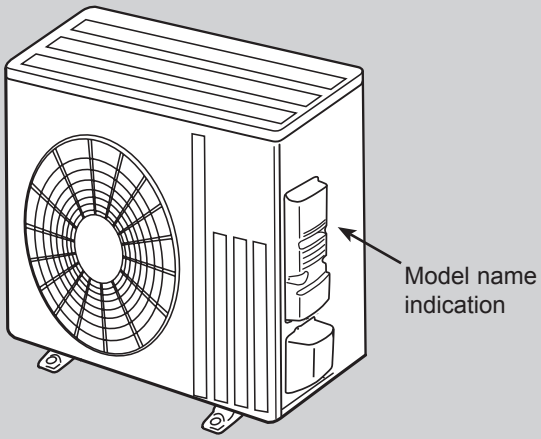

NAXSKH09A112AA

CONTENTS

1. SERVICE PARTS LIST 2

SERVICE MANUAL (OCHA709)

1 SERVICE PARTS LIST

OUTDOOR UNIT STRUCTURAL PARTS, ELECTRICAL PARTS AND FUNCTIONAL PARTS

NAXSKH09A112AA NAXSKH12A112AA

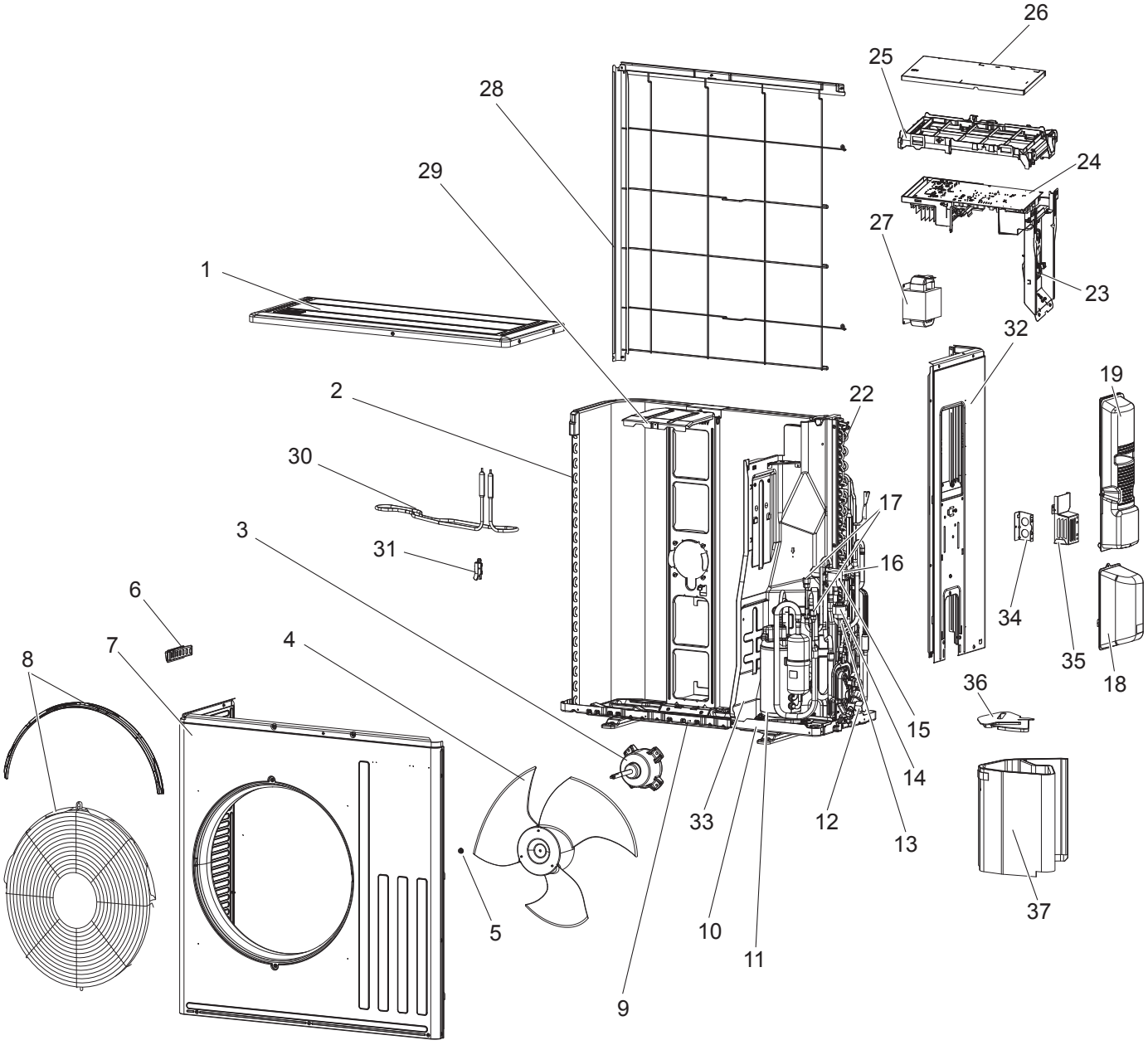

The part quantity below indicates the required number of pieces per unit.

No.	Part No.	Part Name	NAXSKH09A112AA	NAXSKH12A112AA	Wiring Diagram Symbol	Remarks [Drawing No.]
1	E27 L07 297	TOP PANEL	1	1		
2	E22 N94 630	OUTDOOR HEAT EXCHANGER	1	1		
3	E27 M59 301	OUTDOOR FAN MOTOR	1	1	MF	
4	E22 F28 501	PROPELLER FAN	1	1		
5	E27 L05 508	PROPELLER FAN NUT	1	1		
6	E22 817 009	HANDLE	1	1		
7	E22 N94 232	CABINET	1	1		
8	E22 N94 521	FAN GUARD	1	1		Includes ice guard
9	E22 H25 290	BASE	1	1		
10	E22 C34 506	COMPRESSOR RUBBER MOUNT	3	3		3 pcs/set
11	E27 W10 900	COMPRESSOR	1	1	MC	SNB130FHBM2T
12	E27 W10 663	STOP VALVE ASSY	1	1		Includes STOP VALVE(LIQ, GAS)
13	E22 29F 645	EXPANSION VALVE ASSY	1	1		Includes LEV body, Capillary tube
14	E27 W10 493	EXPANSION VALVE COIL	1	1	LEV	
15	E22 N91 490	R.V. COIL	1	1	21S4	
16	E22 A56 961	4-WAY VALVE	1	1		
17	E22 E79 641	SERVICE PORT	2	2		
18	E22 F28 650	VALVE COVER	1	1		
19	E22 N94 245	SERVICE PANEL	1	1		
20	E22 38F 309	AMBIENT TEMP. THERMISTOR	1	1	RT65	
21	E22 G16 308	THERMISTOR SET	1	1	RT61, RT62	
22	E22 G16 307	OUTDOOR H/E TEMP. THERMISTOR	1	1	RT68	
23	E22 L85 374	TERMINAL BLOCK	1	1	TB1	
24	E27 W10 451	INVERTER P.C. BOARD	1			Includes heat sink and RT64
	E27 W11 451	INVERTER P.C. BOARD		1		Includes heat sink and RT64
25	—	PB SUPPORT	1	1		[RK00A867G02]
26	—	PB COVER	1	1		[RK00G233G04]
27	E22 H21 337	REACTOR	1	1	L61	
28	E22 L87 523	CONDENSER NET	1	1		
29	E22 J52 515	MOTOR SUPPORT	1	1		
30	E22 39F 526	DEFROST HEATER	1	1		H includes 26H
31	E22 J52 381	HEATER PROTECTOR	1	1	26H	
32	E22 N94 233	BACK PANEL (OUT)	1	1		
33	E27 M63 293	SEPARATOR	1	1		
34	E22 29F 978	CONDUIT PLATE	1	1		
35	E22 29F 979	CONDUIT COVER	1	1		
36	—	COMP FELT (TOP)	1	1		[RK33J673H01]
37	—	COMP FELT (BODY)	1	1		[RK33J577H01]
38	E27 N04 250	T.ST SCREW	34	34		
39	—	BRAND LABEL	1	1		[DK79G294H01]
40	—	LEAD ASSY COMP	1	1		[DM00L834G17]

Parts numbers that are circled are not shown in the illustration.

OUTDOOR UNIT STRUCTURAL PARTS, ELECTRICAL PARTS AND FUNCTIONAL PARTS

NAXSKH15A112AA NAXSKH18A112AA

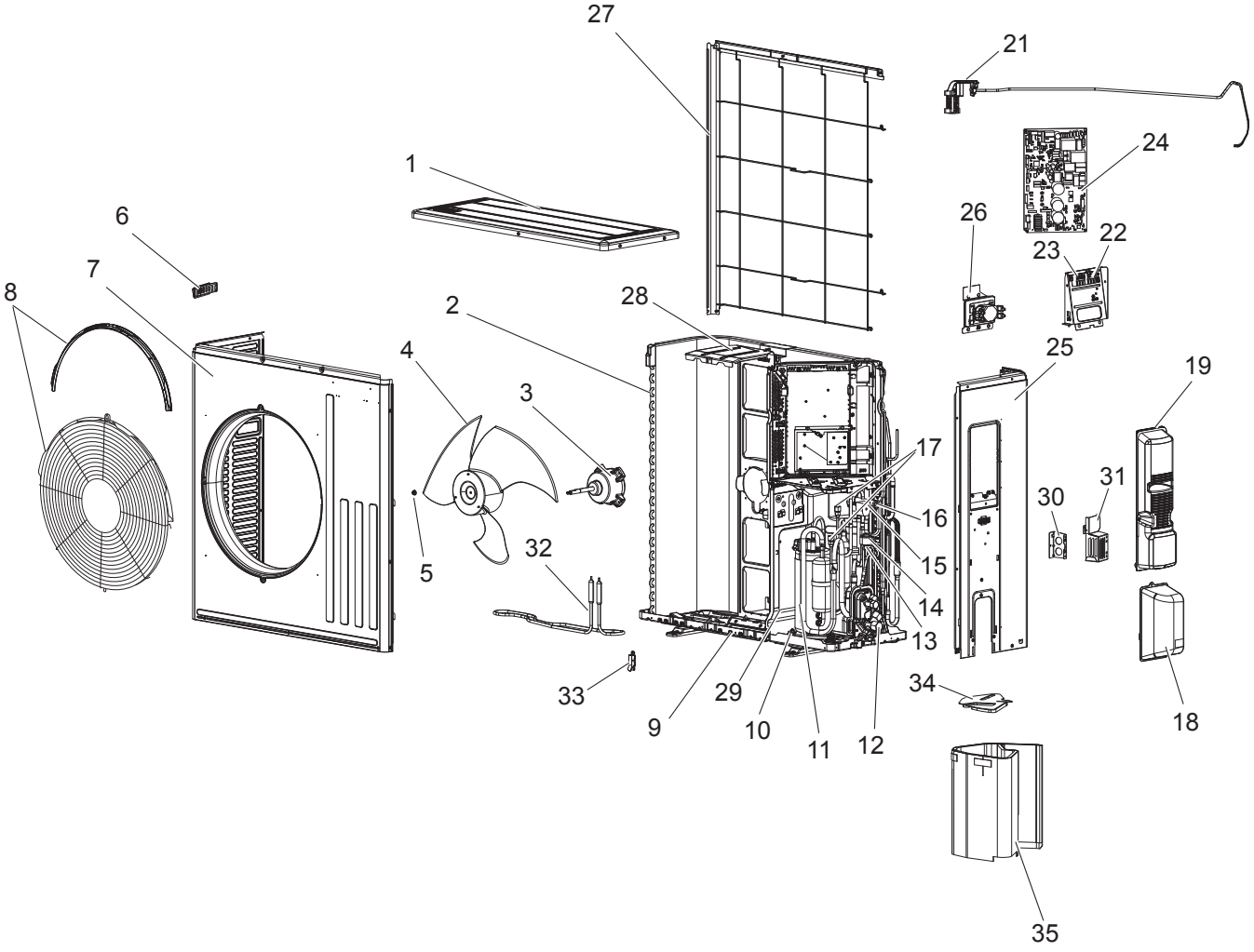

The part quantity below indicates the required number of pieces per unit.

No.	Part No.	Part Name	NAXSKH15A112AA	NAXSKH18A112AA	Wiring Diagram Symbol	Remarks [Drawing No.]
1	E27 L07 297	TOP PANEL	1	1		
2	E27 W12 630	OUTDOOR HEAT EXCHANGER	1	1		
3	E22 F28 301	OUTDOOR FAN MOTOR	1	1	MF	
4	E22 F28 501	PROPELLER FAN	1	1		
5	E27 L05 508	PROPELLER FAN NUT	1	1		
6	E22 817 009	HANDLE	1	1		
7	E27 M60 232	CABINET	1	1		
8	E22 N94 521	FAN GUARD	1	1		Includes ice guard
9	E22 H25 290	BASE	1	1		
10	E22 C34 506	COMPRESSOR RUBBER MOUNT	3	3		3 pcs/set
11	E27 W12 900	COMPRESSOR	1	1	MC	SNB220FQGMT
12	E27 W12 663	STOP VALVE ASSY	1	1		Includes STOP VALVE(LIQ, GAS)
13	E22 W12 645	EXPANSION VALVE ASSY	1	1		Includes LEV body, Capillary tube
14	E27 M59 493	EXPANSION VALVE COIL	1	1	LEV	
15	E27 M59 490	R.V. COIL	1	1	21S4	
16	E22 A56 961	4-WAY VALVE	1	1		
17	E22 E79 641	SERVICE PORT	2	2		
18	E22 F28 650	VALVE COVER	1	1		
19	E22 L87 245	SERVICE PANEL	1	1		
20	E22 R84 308	THERMISTOR SET	1	1	RT61, RT62, RT68	
21	E22 38F 309	AMBIENT TEMP. THERMISTOR	1	1	RT65	
22	E27 W12 374	TERMINAL BLOCK	1	1	TB1	
23	E22 T16 374	TERMINAL BLOCK	1	1	TB2	
24	E27 W12 451	INVERTER P.C. BOARD	1			Includes heat sink and RT64
	E27 W13 451	INVERTER P.C. BOARD		1		Includes heat sink and RT64
25	E22 N94 233	BACK PANEL (OUT)	1	1		
26	E22 R84 337	REACTOR	1	1	L	
27	E22 L87 523	CONDENSER NET	1	1		
28	E22 J52 515	MOTOR SUPPORT	1	1		
29	E27 M64 293	SEPARATOR	1	1		
30	E22 29F 978	CONDUIT PLATE	1	1		
31	E22 29F 979	CONDUIT COVER	1	1		
32	E22 39F 526	DEFROST HEATER	1	1		H includes 26H
33	E22 J52 381	HEATER PROTECTOR	1	1	26H	
34	—	COMP FELT (TOP)	1	1		[RK33J673H01]
35	—	COMP FELT (BODY)	1	1		[RK33J578H01]
36	E27 N04 250	T.ST SCREW	34	34		
37	—	BRAND LABEL	1	1		[DK79G294H01]
38	—	LEAD ASSY COMP	1	1		[BT78L020G01]
39	—	ELECTRICAL PARTS BOX	1	1		[SQ00J359G25]

Parts numbers that are circled are not shown in the illustration.

MITSUBISHI ELECTRIC TRANE HVAC US LLC

HEAD OFFICE: 1340 SATELLITE BOULEVARD, SUWANEE, GA 30024, USA

©Copyright 2019 MITSUBISHI ELECTRIC CORPORATION
Published : Nov. 2019 No.OCBA709
Made in Japan

Specifications are subject to change without notice.