PremiSys®

Document 486914
Models MP, MPE, MPC
Packaged Rooftop Ventilator

Installation, Operation and Maintenance Manual

Please read and save these instructions for future reference. Read carefully before attempting to assemble, install, operate or maintain the product described. Protect yourself and others by observing all safety information. Failure to comply with instructions could result in personal injury and/or property damage!

C ETL LISTED US
Intertek

General Safety Information

⚠ WARNING

The roof lining contains high voltage wiring. To prevent electrocution, do not puncture the interior or exterior panels of the roof.

⚠ WARNING

For A2L appliance only. LEAK DETECTION SYSTEM installed. Unit must be powered except for service.

⚠ WARNING

This unit is equipped with electrically powered safety measures. To be effective, the unit must be electrically powered at all times after installation, other than when servicing.

⚠ WARNING

Do not use means to accelerate the defrosting process or to clean, other than those recommended by the manufacturer.

The appliance shall be stored in a room without continuously operating ignition sources (for example: open flames, an operating gas appliance or an operating electric heater.

Do not pierce or burn.

Be aware that refrigerants may not contain an odor.

DANGER

- Always disconnect power before working on or near this equipment. Lock and tag the disconnect switch or breaker to prevent accidental power up.
- If this unit is equipped with optional gas accessories, turn off gas supply whenever power is disconnected.

CAUTION

This unit is equipped with a compressed refrigerant system. If a leak in the system should occur, immediately evacuate the area. An EPA Certified Technician must be engaged to make repairs or corrections. Refrigerant leaks may also cause bodily harm.

CAUTION

When servicing the unit, the internal components may be hot enough to cause pain or injury. Allow time for cooling before servicing.

© 2024 Mitsubishi Electric US, Inc.

General Safety Information

This appliance is not intended for use by persons (including children) with reduced physical, sensory or mental capabilities, or lack of experience and knowledge, unless they have been given supervision or instruction concerning use of the appliance by the person responsible for their safety. Children should be supervised to ensure they do not play with this appliance. Personnel should have a clear understanding of these instructions and should be aware of general safety precautions. Improper installation can result in electric shock, possible injury due to coming in contact with moving parts, as well as other potential hazards. Other considerations may be required if high winds or seismic activity are present. If more information is needed, contact a licensed professional engineer before moving forward.

1. Follow all local electrical and safety codes, as well as the National Electrical Code (NEC), the National Fire Protection Agency (NFPA), where applicable. Follow the Canadian Electrical Code (CEC) in Canada.
2. All moving parts must be free to rotate without striking or rubbing any stationary objects.
3. Unit must be securely and adequately grounded.
4. Do not spin wheel faster than maximum cataloged fan RPM. Adjustments to fan speed significantly affect motor load. If the fan RPM is changed, the motor current should be checked to make sure it is not exceeding the motor nameplate amps.
5. Verify that the power source is compatible with the equipment.
6. Never open access doors to the unit while it is running.

© 2024 Mitsubishi Electric US, Inc.

Table of Contents

General Safety Information 1
Receiving, Handling, Storage 4
Product Overview 5
Subassemblies 6
Installation 8
Recommended Electrical and
Gas Supply Entry Locations 16
Piping Installation 17
Electrical Information. 18
Control Center Components 19
Component Operation. 20
Optional Component Operation 20
Factory-Installed Refrigeration Systems 24
Refrigeration Start-Up and Service 26
Start-Up Components 29
Troubleshooting
  Alarms 32
  Unit 33
  Refrigeration Circuit 34
Routine Maintenance 38
Optional Polymer Energy Wheel 41
Optional Aluminum Energy Wheel 43
Optional Energy Core 44
Reference
  Venting Connection Locations 45
  Rated Airflow 46
Our Commitment. . . . . Backcover

© 2024 Mitsubishi Electric US, Inc.

Receiving

⚠ WARNING

The storage of the appliance should be in accordance with the applicable regulations or instructions, whichever is more stringent.

This product may have been subject to road salt during transit. If so, immediately wash off all visible white reside from all exterior surfaces. Upon receiving the product, check to ensure all line items are accounted for by referencing the delivery receipt or packing list. Inspect each crate or carton for shipping damage before accepting delivery. Alert the carrier if any damage is detected, do not refuse shipment. The customer shall make notation of damage (or shortage of items) on the delivery receipt and all copies of the bill of lading which should be countersigned by the delivering carrier. If damaged, immediately contact your manufacturer's representative. Any physical damage to the unit after acceptance is not the responsibility of the manufacturer.

Handling

Units are to be rigged and moved by the lifting brackets provided. Location of brackets varies by model and size. Handle in such a manner as to keep from scratching or chipping the coating. Damaged finish may reduce ability of unit to resist corrosion.

Unpacking

Verify that all required parts and the correct quantity of each item have been received. If any items are missing, report shortages to your local representative to arrange for obtaining missing parts. Sometimes it is not possible that all items for the unit be shipped together due to availability of transportation and truck space. Confirmation of shipment(s) must be limited to only items on the bill of lading.

Storage

Units are protected against damage during shipment. If the unit cannot be installed and operated immediately, precautions need to be taken to prevent deterioration of the unit during storage. The user assumes responsibility of the unit and accessories while in storage. The manufacturer will not be responsible for damage during storage. These suggestions are provided solely as a convenience to the user.

The ideal environment for the storage of units and accessories is indoors, above grade, in a low humidity atmosphere which is sealed to prevent the entry of blowing dust, rain, or snow. Units designed for outdoor applications may be stored outdoors. All accessories must be stored indoors in a clean, dry atmosphere.

Indoor

Maintain temperatures evenly to prevent condensation. Remove any accumulations of dirt, water, ice, or snow and wipe dry before moving to indoor storage. To avoid condensation, allow cold parts to reach room temperature. Leave coverings loose to permit air circulation and to allow for periodic inspection.

The unit should be stored at least 3½ in. (89 mm) off the floor. Clearance should be provided to permit air circulation and space for inspection.

Outdoor

The unit should be placed on a level surface to prevent water from leaking into the unit. The unit should be elevated so that it is above water and snow levels. Ensure sufficient support to prevent unit from settling into soft ground. Locate parts far enough apart to permit air circulation, sunlight, and space for periodic inspection. To minimize water accumulation, place all unit parts on blocking supports so that rain water will run off.

Do not cover parts with plastic film or tarps as these cause condensation of moisture from the air passing through heating and cooling cycles.

Inspection and Maintenance

While in storage, inspect units once per month. Keep a record of inspection and maintenance performed.

If moisture or dirt accumulations are found on parts, the source should be located and eliminated. At each inspection, rotate the fan wheel by hand ten to fifteen revolutions to distribute lubricant on motor. If paint deterioration begins, consideration should be given to touch-up or repainting. Units with special coatings may require special techniques for touch-up or repair.

Machined parts coated with rust preventive should be restored to good condition promptly if signs of rust occur. Immediately remove the original rust preventive coating with petroleum solvent and clean with lint-free cloths. Polish any remaining rust from surface with crocus cloth or fine emery paper and oil. Do not destroy the continuity of the surfaces. Wipe thoroughly clean with Tectyl® 506 (Ashland Inc.) or the equivalent. For hard to reach internal surfaces or for occasional use, consider using Tectyl® 511M Rust Preventive, WD-40® or the equivalent.

Removing from Storage

As units are removed from storage to be installed in their final location, they should be protected and maintained in a similar fashion until the equipment goes into operation.

Prior to installing the unit and system components, inspect the unit assembly to make sure it is in working order.

1. Check all fasteners, set screws on the fan, wheel, bearings, drive, motor base, and accessories for tightness.
2. Rotate the fan wheel(s) by hand and assure no parts are rubbing.

© 2024 Mitsubishi Electric US, Inc.

Product Overview

A horizontally configured High Percentage Outdoor Air unit designed for installation outdoors. The unit is designed to replace air that is exhausted from the building and also heat and cool, as needed. The air volume produced by the unit is constant, but can be optionally modulated to provide a variable air volume (VAV).

Cooling

Units have the following cooling options available:

- Packaged DX
- Air-Source Heat Pump (ASHP)
  Not available on housing sizes 0 or 4

Units with packaged DX are shipped fully charged with refrigerant and are ready for operation upon arrival.

Heating

There are four different optional heat sources that can be ordered for this unit:

- Indirect gas-fired furnace with one or two sets of heat exchangers
- Electric heat with infinitely variable SCR control
- Hot water coil (Installed in furnace section)
- Air-Source Heat Pump (ASHP)
  Not available on housing sizes 0 or 4

Airflow Arrangement

The unit is capable of Constant Air Volume (CAV), Variable Air Volume (VAV), and 100% Outdoor Air.

Safety Listing

Models are listed per ANSI or 60335-2-40, Heating and Cooling Equipment and are ETL Certified.

Models and Capacities

Model	Cooling Capacity
Packaged DX	
MP-0 / MPE-0	3 to 7 tons
MP-1 / MPE-1	5 to 15 tons
MP-2 / MPE-2	15 to 30 tons
MP-4 / MPE-4	25 to 70 tons
Air-Source Heat Pump	
MP-1 / MPE-1	5 to 15 tons
MP-2 / MPE-2	15 to 70 tons
Core	
MPC-1	5-15 tons
MPC-2	15-30 tons

Supplemental Installation, Operation and Maintenance Manuals

Refer to the following Manufacturer Installation, Operation and Maintenance Manuals for additional information:

- Indirect Gas-Fired Heat Modules
- Microprocessor Controller
- M-Net Connection

For information on Service and installation Operation manual please refer to the manuals in the Outdoor equipment.

- PUHY-P96T/YKMU
- PUHY-P144T/YKMU
- PUHY-P192T/YSKMU
- PUHY-P240T/YSKMU
- PUHY-EP96T/YNU
- PUHY-EP144T/YNU
- PUHY-EP192T/YSNU (twinned model)
- PUHY-EP240T/YSNU (twinned model)
- TUHYE096(3/4)AN40A(N/B)
- TUHYE144(3/4)AN40A(N/B)
- TUHYE192(3/4)BN40A(N/B) (twinned model)
- TUHYE240(3/4)BN40A(N/B) (twinned model)

© 2024 Mitsubishi Electric US, Inc.

Subassemblies

Blower

Either one, two, or three plenum-type fans. All units are equipped with a plenum fan for Supply Air and a second may be selected for Exhaust (Relief) Air.

Coils

Evaporator coil (optional)
Condenser coil (optional, packaged DX only)
Indoor coil (optional, air-source heat pump only)
Outdoor coil (optional, air-source heat pump only)
Water coil (optional)
Reheat coil (optional)

Compressors

Each unit having packaged DX will have either one, two, three, or four refrigerant compressors. Package DX system will have one inverter compressor and may contain additional staged compressors. Air-source heat pump units will have one inverter scroll compressor and may contain a second staged compressor.

Dampers

Motorized intake air damper, optional motorized recirculating damper. Optional return air damper. Optional gravity-type exhaust damper.

Optional Barometric Relief Damper

Used during economizer mode of the unit when building pressure increases, relief damper will open due to over pressurization.

Electric Heater

An SCR controlled electric heater (not shown) is available on the units. It has its own control panel and may require a separate power supply. See unit-specific wiring diagram.

Supply Filters

Filter bank depth of either 2 or 4-inch.

Indirect Gas-Fired Furnace

Housing sizes 0, 1 and 2 use furnace model PVG. Housing sizes 4 use furnace models PVG 600-800 or HMA 1000-1200.

Packaged DX System

Any unit may be ordered with a packaged DX system. Housing size 0 will use one compressor; housing size 1 will include one compressor; housing size 2 will include one or two compressors; housing size 4 will include two, three, or four compressors; a condenser coil(s) and evaporator coil(s) and all required components. Units that have packaged DX are charged with R-454B refrigerant. Do not use tools or parts designed for other refrigerants on these units.

Air-Source Heat Pump

Units having an air-source heat pump will include either one or two compressors, an indoor and outdoor coil, and all required components. Air-source heat pump units are charged with R-454B refrigerant. Do not use tools or parts designed for other refrigerants on these units. Not available on housing sizes 0 or 4.

Vestibule

Some units may be ordered with a factory-assembled vestibule that is to be field-attached to the side of the unit. See lifting instructions.

© 2024 Mitsubishi Electric US, Inc.

Subassemblies

MP AND MPE

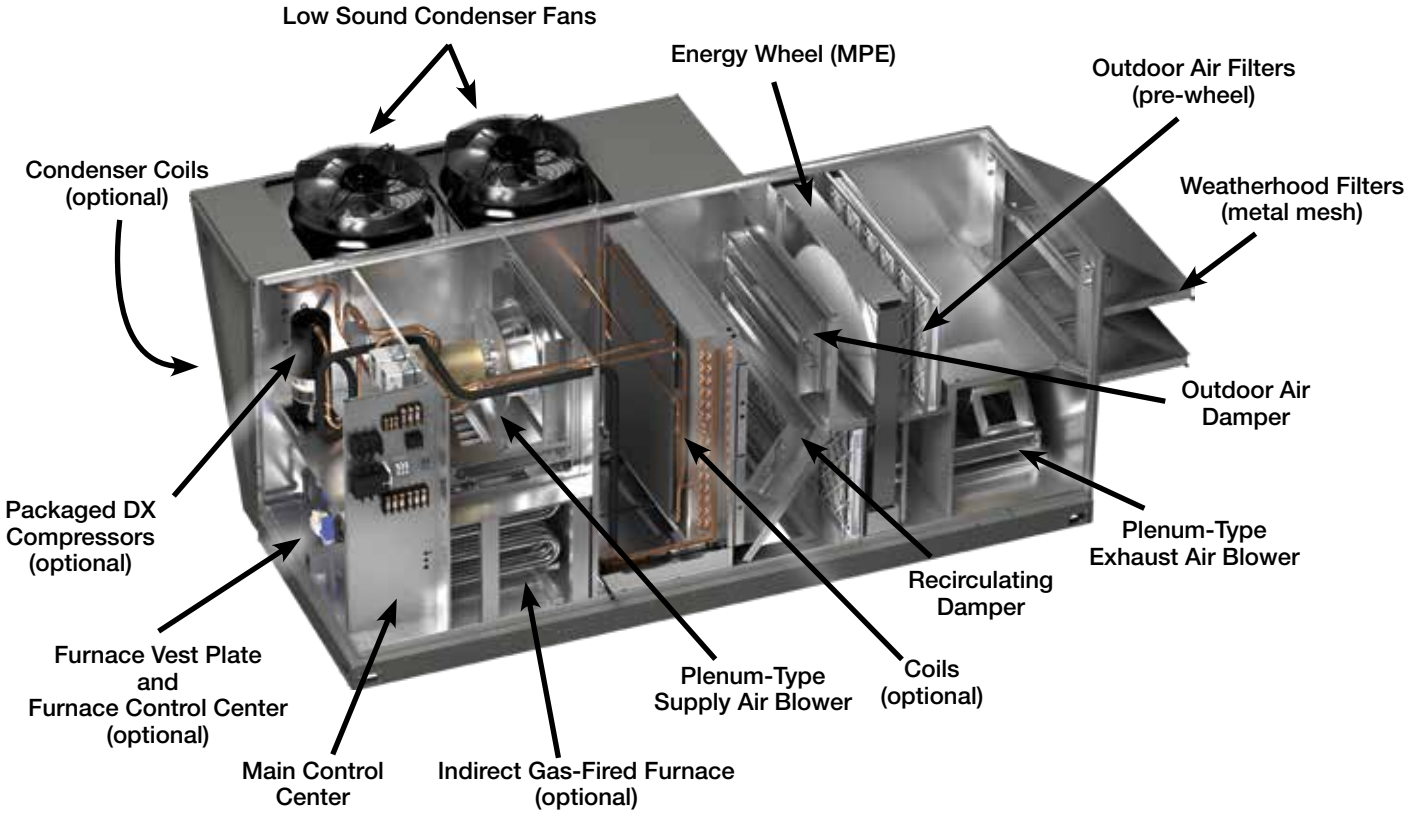

MPC

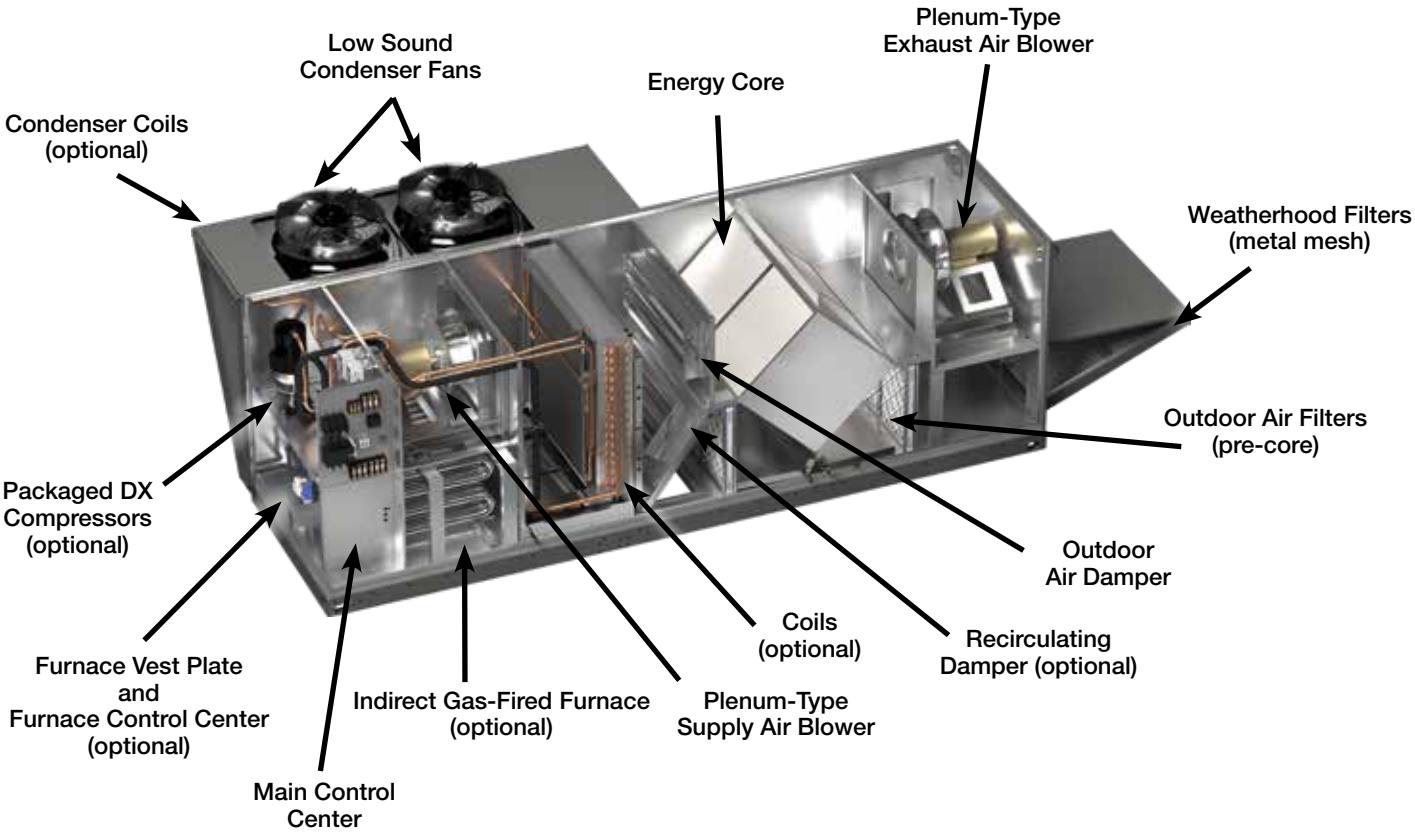

Installation - Packaged DX

Typical Unit Weights and Dimensions

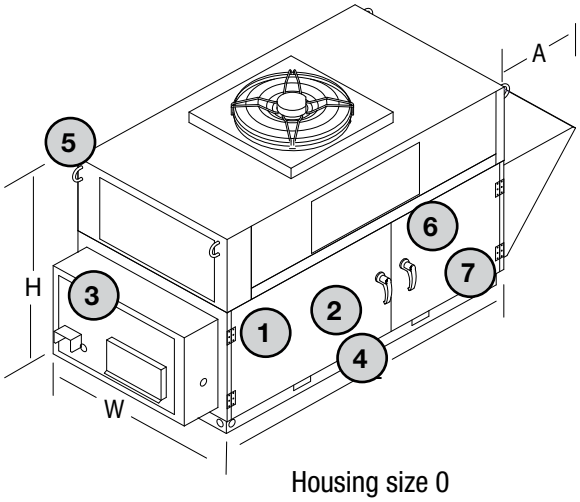

Housing size 0

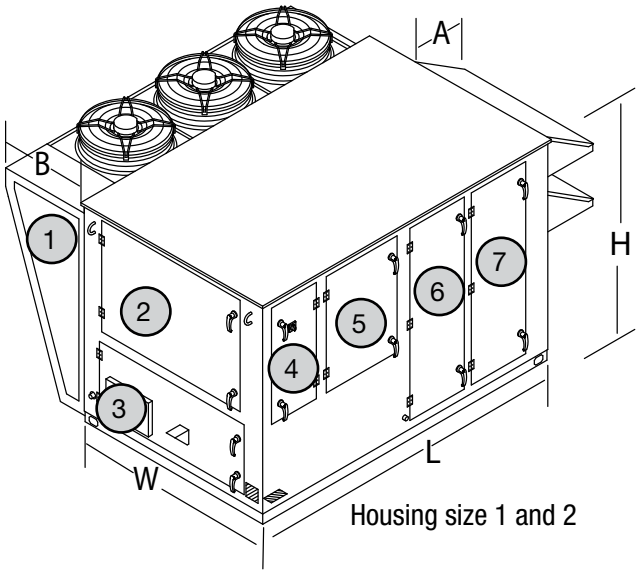

Housing size 1 and 2

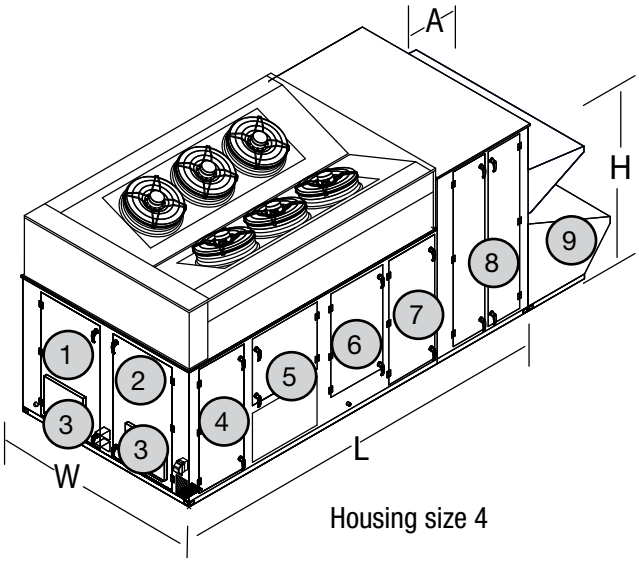

Housing size 4

Component Access	
1	Optional Inverter Compressor VFD
2	Optional Compressor/Electrical
3	Optional Gas Furnace/Optional Electric Heater
4	Electrical
5	Supply Blower
6	Coil
7	Filters
8*	Exhaust Blower/Optional Electric Preheat
9	Powered Exhaust Blower Section
* When a powered exhaust fan (or MPE) is selected, door 8 will be to the immediate right of door 7.	

© 2024 Mitsubishi Electric US, Inc.

Installation - Packaged DX

Typical Unit Weights and Dimensions

Model	Nominal tonnage (tons)	Height (H)	Width (W)	Length (L)	Intake (A)	Condensing Section (B)	Nominal weight (lbs)	Outdoor Intake	Supply Discharge	Return Intake	Exhaust Discharge
MP-0	3-7	58.1	44.0	82.2[9]	22.3	NA	1,225	End	Bottom or Side	Bottom or End[2]	NA
MP-1	5-15	59.3	52.5	98.6[6]/149.5[7]	22.1	30.1	3,150			Bottom, End[5] or Side[1]	End[3] or Side[1]
MP-2	15-30	72.5	68.2	109[6]/163.2[7]	27.1	30.1	4,375				
MP-4	25-70	101.3	98.0	155.2	39/48.4[8]	NA	7,625			Bottom, End[5]	End
MP-4 EIS*	25-70	101.3	98.0	188	39/48.4[8]	NA	7,925			Side[1]	
MPE-0	3-7	58.1	44.0	124.8	28.6	NA	1,688	End	Bottom or Side	Bottom	Side
MPE-1	5-15	59.3	52.5	149.5	22.1	30.1	3,325			Bottom	
MPE-1 EIS*	5-15	59.3	52.5	180.5	22.1	30.1	3,475			Side	
MPE-2	15-30	72.5	68.2	163.2	27.1	30.1	4,650			Bottom	
MPE-2 EIS*	15-30	72.5	68.2	197.2	27.1	30.1	5,050			Side	
MPE-4	25-70	101.3	98.0	199.6	48.4	NA	8,900			Bottom	End
MPE-4 EIS*	25-70	101.3	98.0	233.8	48.4	NA	9,175			Side	
MPC-1	5-15	59.3	52.5	180.5	40	30.1	3,800	End	Bottom or Side	Bottom	Side
MPC-2	15-30	72.5	68.2	197.2	38	30.1	5,275				

All dimensions are shown in inches. Weight is shown in pounds and includes largest supply and exhaust fans, PDX with reheat, largest indirect-gas fired furnace, and all dampers. Actual weights will vary based on the unit configuration.

[1] Only available with powered exhaust
[2] Only available without barometric relief
[3] Only available with barometric relief
[4] Only available without powered exhaust
[5] Only available without powered exhaust and without barometric relief
[6] Length with bottom or end return
[7] Length with powered exhaust
[8] Length with powered exhaust bumpout
[9] Optional indirect gas-fired furnace bumpout length is additional 13.3 inches

* An EIS Unit means the return air intake is located on the side.

© 2024 Mitsubishi Electric US, Inc.

Installation - Packaged DX

Service Clearance

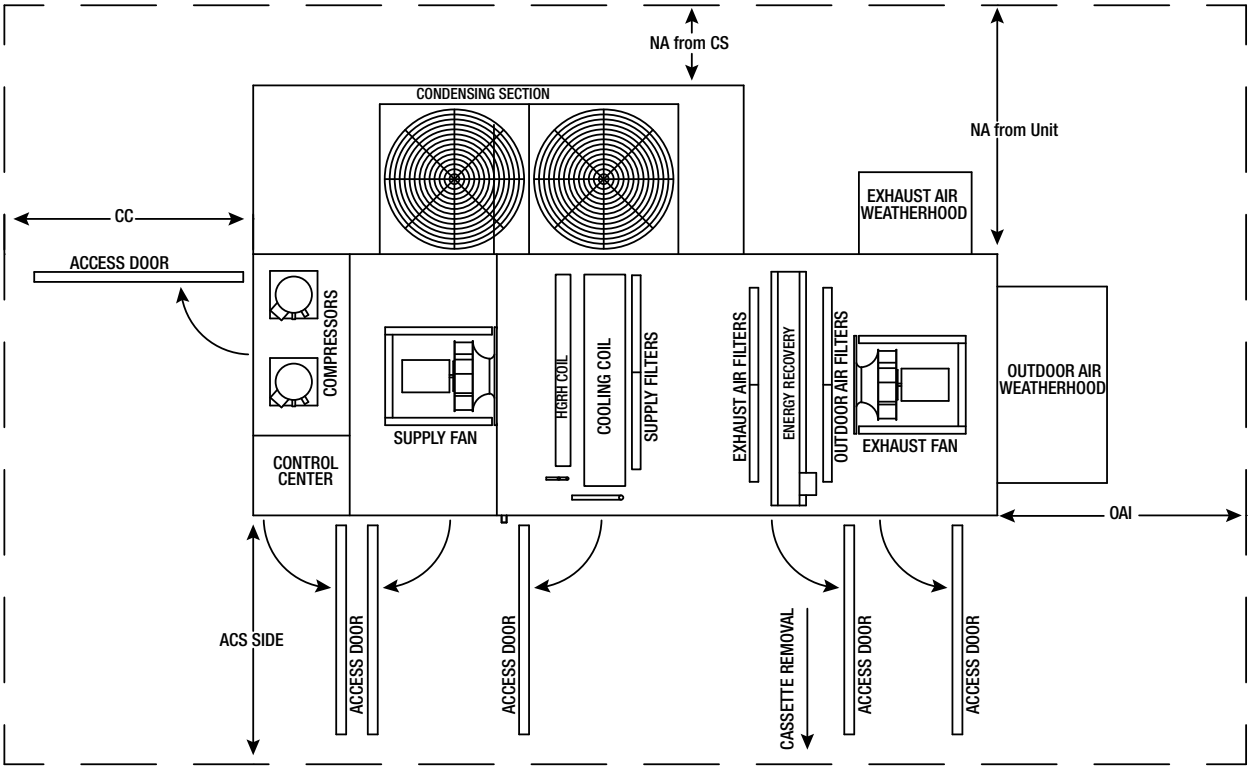

Model	ACS Access Side	CC Control Cabinet End		OAI Outdoor Air Intake		*NA from Unit	NA from Condensing Section	NA from Piping Vestibule (not shown)
		Other	Indoor Mounted with IG Furnace	Outdoor Mounted	Indoor Mounted			
MP-0	50	42	NA	36	NA	24	NA	NA
MP-1	40	42	72	42	18	24	18	30
MP-2	36	58	72	54	18	24	18	30
MP-4	48	48	NA	87	NA	48	NA	NA
MPE-0	24	42	NA	36	NA	24	NA	NA
MPE-1	40	42	72	42	18	24	18	30
MPE-2	36	58	72	54	18	24	18	30
MPE-4	48	48	NA	87	NA	48	NA	NA
MPC-1	40	42	NA	88	NA	24	18	30
MPC-2	36	58	NA	82	NA	24	18	30

All dimensions are shown in inches.

*No condensing section or piping vestibule, or unit has top condensing section.

© 2024 Mitsubishi Electric US, Inc.

Refrigeration Minimum Room and Airflow Requirements

⚠ WARNING

For appliances using A2L refrigerants connected via an air duct system to one or more rooms, minimum circulation airflow is required to prevent refrigerant stagnation in the event of a refrigerant leak. Open all VAV appliances or zoning dampers to allow for airflow at or above Q min in Table A on the next page.

⚠ WARNING

For appliances using A2L refrigerants connected via an air duct system to one or more rooms of insufficient floor space as determined in Table A on the next page above, additional ventilation is required in accordance with ASHRAE 15.

⚠ WARNING

For appliances using A2L REFRIGERANTS connected via an air duct system to one or more rooms, a warning with the substance of the following: “Auxiliary devices which may be a POTENTIAL IGNITION SOURCE shall not be installed in the duct work. Examples of such POTENTIAL IGNITION SOURCES are hot surfaces with a temperature exceeding 700°C and electric switching devices”.

⚠ WARNING

For appliances using A2L refrigerants connected via an air duct system to one or more rooms, only auxiliary devices approved by the appliance manufacturer or declared suitable with the refrigerant shall be installed in connecting ductwork.

⚠ WARNING

For duct connected appliances, false ceilings or drop ceilings may be used as a return air plenum if any external connections are also provided with a refrigerant sensor immediately below the return air plenum duct joint.

Installation Requirements

Where minimum room areas, minimum airflows and conditioned space areas are defined, Table A can be utilized to verify installation accordance with the releasable charge within a unit. Ensure that the correct table is referenced for the refrigerant utilized in the appliance.

Note: The releasable charge is the maximum refrigerant charge of one circuit within an appliance when more than one circuit is present. An example of a two-circuit system would be a charge of 10 pounds (4.53 kg) in circuit A and a charge of 20 pounds (9.06 kg) in circuit B. The releasable charge of this appliance would be 20 pounds (9.06 kg).

© 2024 Mitsubishi Electric US, Inc.

Table A Minimum Airflow and Room Areas R-454B		
Releasable Charge - lbs (kg)	Minimum Airflow CFM (m^3/hr)	Minimum Total Conditioned Room Area - ft^2 (m^2)
4 (1.82)	109 (185)	65 (6)
5 (2.27)	137 (231)	76 (7)
6 (2.72)	163 (276)	97 (9)
7 (3.18)	191 (323)	108 (10)
8 (3.63)	217 (368)	130 (12)
9 (4.08)	244 (414)	140 (13)
10 (4.53)	271 (460)	151 (14)
11 (4.99)	299 (506)	173 (16)
12 (5.44)	326 (552)	183 (17)
13 (5.89)	352 (597)	205 (19)
14 (6.35)	380 (644)	216 (20)
15 (6.8)	407 (690)	227 (21)
16 (7.25)	433 (735)	248 (23)
17 (7.71)	461 (782)	259 (24)
18 (8.16)	488 (828)	280 (26)
19 (8.61)	515 (873)	291 (27)
20 (9.06)	542 (919)	302 (28)
21 (9.52)	569 (965)	323 (30)
22 (9.97)	596 (1011)	334 (31)
23 (10.42)	623 (1057)	356 (33)
24 (10.88)	650 (1103)	366 (34)
25 (11.33)	677 (1149)	377 (35)
26 (11.78)	704 (1194)	399 (37)
27 (12.24)	731 (1241)	409 (38)
28 (12.69)	759 (1287)	420 (39)
29 (13.14)	785 (1332)	442 (41)
30 (13.59)	812 (1378)	453 (42)
31 (14.05)	839 (1424)	474 (44)
32 (14.5)	866 (1470)	485 (45)
33 (14.95)	893 (1516)	496 (46)
34 (15.41)	921 (1562)	517 (48)
35 (15.86)	948 (1608)	528 (49)
38 (17.22)	1,029 (1746)	571 (53)
41 (18.58)	1,110 (1884)	625 (58)
44 (19.94)	1,191 (2021)	668 (62)
47 (21.3)	1,272 (2159)	711 (66)
50 (22.65)	1,353 (2296)	754 (70)
53 (24.01)	1,434 (2434)	797 (74)
56 (25.37)	1,515 (2572)	840 (78)
59 (26.73)	1,597 (2710)	894 (83)
62 (28.09)	1,677 (2847)	937 (87)

Table A Minimum Airflow and Room Areas R-454B		
Releasable Charge - lbs (kg)	Minimum Airflow CFM (m^3/hr)	Minimum Total Conditioned Room Area - ft^2 (m^2)
65 (29.45)	1,759 (2985)	980 (91)
68 (30.81)	1,840 (3123)	1,023 (95)
71 (32.17)	1,921 (3261)	1,066 (99)
74 (33.53)	2,003 (3399)	1,109 (103)
77 (34.89)	2,084 (3537)	1,163 (108)
80 (36.24)	2,164 (3673)	1,206 (112)
83 (37.6)	2,245 (3811)	1,249 (116)
86 (38.96)	2,326 (3949)	1,292 (120)
89 (40.32)	2,408 (4087)	1,335 (124)
92 (41.68)	2,489 (4225)	1,389 (129)
95 (43.04)	2,570 (4363)	1,432 (133)
98 (44.4)	2,651 (4500)	1,475 (137)
101 (45.76)	2,732 (4638)	1,518 (141)
104 (47.12)	2,814 (4776)	1,561 (145)
107 (48.48)	2,895 (4914)	1,604 (149)
110 (49.83)	2,976 (5051)	1,658 (154)
113 (51.19)	3,057 (5189)	1,701 (158)
116 (52.55)	3,138 (5327)	1,744 (162)
119 (53.91)	3,219 (5464)	1,787 (166)
122 (55.27)	3,300 (5602)	1,830 (170)
125 (56.63)	3,381 (5740)	1,873 (174)
128 (57.99)	3,463 (5878)	1,927 (179)
131 (59.35)	3,544 (6016)	1,970 (183)
134 (60.71)	3,625 (6154)	2,013 (187)
137 (62.07)	3,706 (6291)	2,056 (191)
140 (63.42)	3,787 (6428)	2,099 (195)
143 (64.78)	3,868 (6566)	2,142 (199)
146 (66.14)	3,949 (6704)	2,196 (204)
149 (67.5)	4,030 (6842)	2,239 (208)
152 (68.86)	4,112 (6980)	2,282 (212)
155 (70.22)	4,192 (7117)	2,325 (216)
158 (71.58)	4,274 (7255)	2,368 (220)
161 (72.94)	4,355 (7393)	2,422 (225)
164 (74.3)	4,436 (7531)	2,465 (229)
167 (75.66)	4,518 (7669)	2,508 (233)
169 (76.56)	4,571 (7760)	2,541 (236)

Values defined above are in accordance with UL 60335-2-40.

Ensure all national, provincial and local safety codes are followed when installing this equipment including considerations for the installed location and building occupancy classification.

© 2024 Mitsubishi Electric US, Inc.

Additional Clearances for Packaged DX Units

Packaged DX units require additional clearance because they must have unrestricted air movement around the condenser coil and condenser fans. Hot air is being discharged from the condenser fans during operation. Enough clearance must be provided to avoid recirculation or coil starvation. When equipped with condenser coils, the unit should never be placed under an overhang or inside a building. A minimum of 48 inches above the condenser fans is acceptable, but unobstructed is strongly recommended.

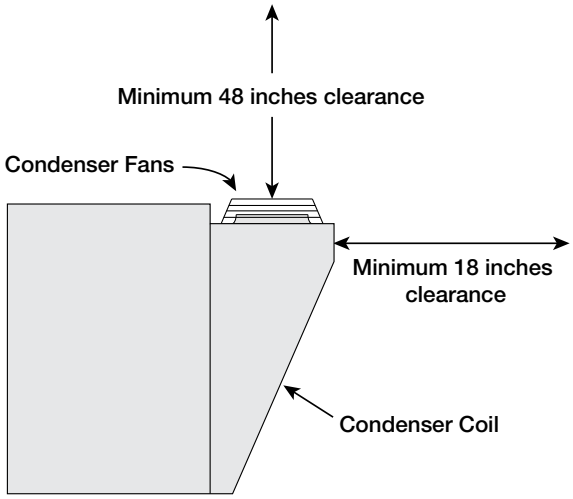

End view of rooftop unit with Packaged DX

Additional Clearances for Air Source Heat Pump

IMPORTANT

Air-source heat pumps are equipped with a defrost cycle to remove ice from the outdoor coil. During defrost cycles, melted water may drip from the bottom of the refrigeration section under the outdoor coil. In cold climates, proper drainage/heat tape must be installed under the outdoor coil to prevent the buildup of ice on the roof.

Air-source heat pump units require additional clearance because they must have unrestricted air movement around the outdoor coil and outdoor fans. Enough clearance must be provided to avoid recirculation or coil starvation. Air-source heat pump units should never be placed under an overhang or inside a building. A minimum of 48-inches above the outdoor fans is acceptable, but unobstructed is strongly recommended.

Handling Concerns for Packaged DX or Air-Source Heat Pump

Units with PDX or ASHP have a system that is pressurized with refrigerant. If damage occurs, the refrigerant could leak into the atmosphere or cause bodily harm due to the extreme cold nature of expanding refrigerant. Use protective equipment such as gloves and safety glasses to minimize or prevent injury in case of a system leak during installation.

Before Lifting

Before lifting, be sure that all shipping materials have been removed from the unit.

Vestibule

Determine whether or not the unit has a vestibule that must be field-attached to the side of the unit. Vestibules are shipped assembled but detached from the unit. They have lifting lugs on them so they can also be lifted by crane, but the installed location of the unit may make it preferable to install the vestibule on the unit prior to lifting.

Field Power Access

Determine where high voltage and low voltage wiring is to be brought into the cabinet. If wiring is to be brought into the cabinet through the floor, see Alternate Supply Entry Locations in this manual. If unit is to be installed on a roof, cut access openings in the roof deck as needed.

Temporary Use

This equipment must not be used as:

- Temporary heating or cooling
- Construction heating

The units should not be operated until construction is complete and the units have properly undergone the pre-start-up and start-up routines.

© 2024 Mitsubishi Electric US, Inc.

Lifting

⚠ WARNING

Spreader bars are required to prevent damage to the cabinet, failure to do so can result in damage that is the installer's responsibility.

1. Ensure that all shipping materials have been removed from unit.
2. To assist in determining rigging requirements, weights are provided in the Unit Weights & Dimensions section of this manual.
3. Refer to submittal for unit weight before lifting. Actual weights will vary based on unit configuration.
4. Unit must be lifted by all lifting lugs provided at top for all housing sizes except 4, which must be lifted from the bottom.
5. Spreader bars must be 6-12" longer than the span of the unit to prevent damage to the cabinet by the lift cables.
6. Never rest the spreader bar on the unit.
7. Always test-lift the unit to check for proper balance and rigging before hoisting to desired location.
8. Never lift unit by weatherhood.
9. Never lift units in windy conditions.
10. Preparation of curb and roof openings should be completed prior to lifting unit to the roof.
11. Check to be sure that gasketing (supplied by others) has been applied to the top of the curb prior to lifting the unit and setting on the curb.
12. Do not use forklifts for handling unit on housing sizes 1, 2 or 4.
13. If using forklift on housing 0, use forks with 48-inch length and ensure forks extend to opposite side of unit using factory-installed forklift pockets at unit base.

Rail Mounting and Layout

- The units may be installed on rails provided and installed by others. Ensure that rails are designed to handle the weight of the unit and provide proper load distribution on building supports.
- Make sure that rail positioning does not interfere with the openings on the unit.
- Rails should run the length of the unit and extend beyond the unit a minimum of 12 inches on each side.
- Unit weight and overall dimensions can be found in the Unit Weights and Dimensions section.
- Set unit on rails, center the base rails of the unit on the steel support rails.

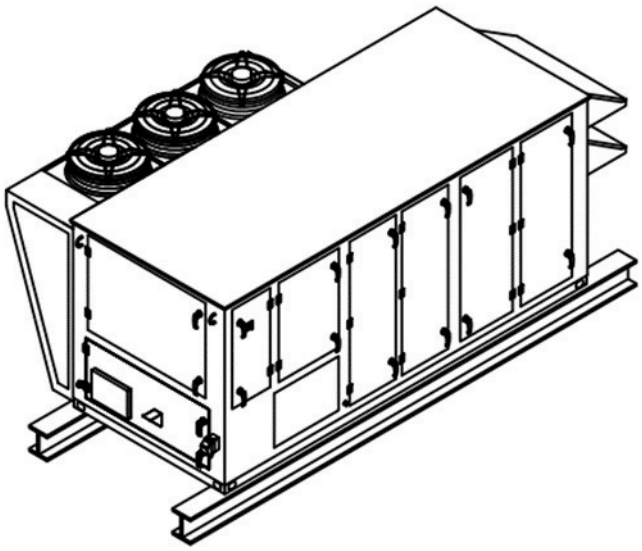

Typical Unit Installed on Rails Supplied by Others

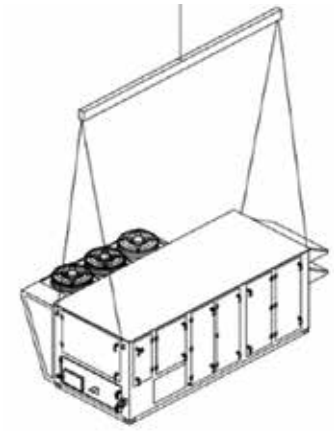

Lifting Details for MP 0, 1, 2, MPE 0, 1, 2, and MPC 1, 2

Applies to units with or without side air return

Lift from the top of the unit 4 lifting points.

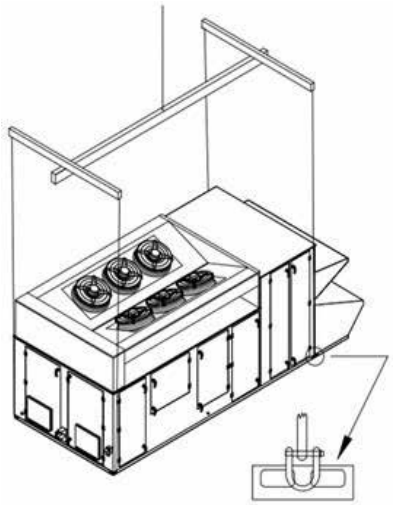

Lifting Details for MP / MPE 4

Applies to units with or without side air return

Lift from the bottom of the unit 4 lifting points.

© 2024 Mitsubishi Electric US, Inc.

Roof Curb Mounting

Roof curb details, including duct locations and dimensions, are to be found in the roof curb assembly instructions.

Rooftop units require curbs to be mounted first. The duct connections must be located so they will be clear of structural members of the building.

1. Factory-supplied roof curbs. Roof curbs are model GKD which are shipped in a knockdown kit (includes duct adapters) and require field assembly (by others) on all housing sizes. Assembly instructions are included with the curb kit.

2. Install curb. Locate curb over roof opening and fasten in place. Check that the diagonal dimensions are within ±1/8 inch of each other and adjust as necessary. For proper coil drainage and unit operation, it is important that the installation be level. Shim the curb as required to level. Install gasketing on top surface of curb (provided by others).

3. Install ductwork. Installation of all ducts should be done in accordance with SMACNA and AMCA guidelines. Duct adapters are provided to support ducts prior to setting the unit.

4. Set the unit. Lift unit to a point directly above the curb and duct openings. Guide unit while lowering to align with duct openings. Roof curbs fit inside the unit base. Make sure the unit is properly seated on the curb and level.

5. Fasten the unit, Fasten the unit to the curb/equipment support(s) using appropriate methods. The installer is responsible for determining appropriate support and fastening methods to ensure compliance with all applicable codes.

6. Install vestibule. If unit was ordered with a vestibule and it has not yet been attached to the unit, caulk and attach the vestibule at this time.

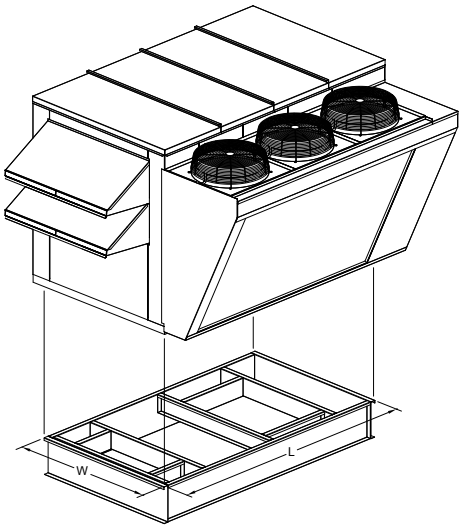

Typical Unit with Condensing Section and Factory-Supplied Curb Kit

Optional Piping Vestibule

If the unit was ordered with the vestibule, the NA (Non-Access side) clearance dimension must be measured from the vestibule.

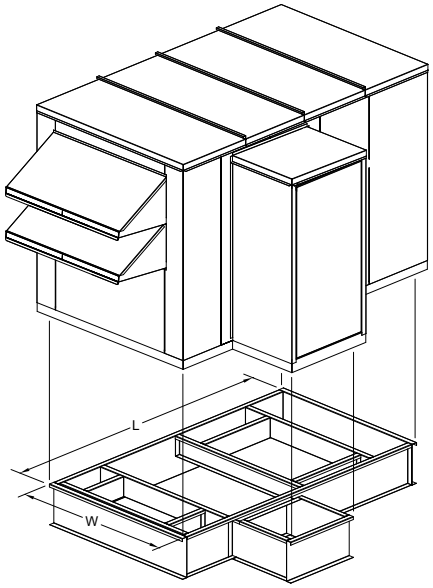

Typical Unit with Piping Vestibule and Factory-Supplied Curb Kit

Ductwork Configurations

NOTE

Downblast Discharge Ductwork - whenever downblast discharge is used, the ductwork directly beneath the unit must be connected with either a “T” or an “L” configuration and the area directly beneath the heat source **must not have any openings** such as louvers or grates.

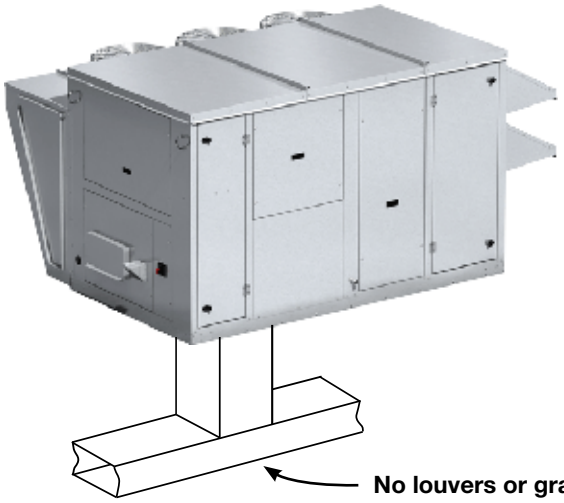

© 2024 Mitsubishi Electric US, Inc.

Recommended Electrical and Gas Supply Entry Locations

Manufacturer recommends that electrical service and gas supply be brought into the cabinet through the end wall, as shown below. There are three penetrations into the cabinet that are required; one for high voltage supply wiring, one for low voltage control wiring and one for either gas supply or high voltage supply wiring for an electric heater.

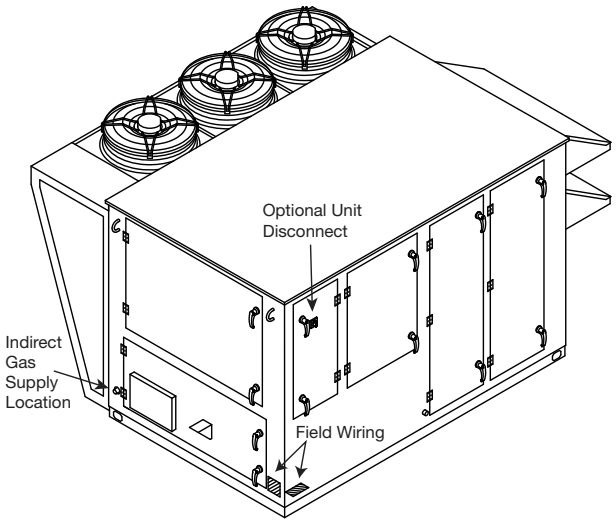

Recommended Gas and Electric Supply Entry Locations

Alternate Supply Entry Locations

Each installation is unique and as a result, alternate entry locations may be field-located. Before using any alternate entry location, verify the suitability of the location and ensure the use of an alternate location does not interfere with unit wiring, components or functionality.

Gas Connections

If this unit is equipped with an indirect gas-fired furnace, connection to an appropriate gas supply line will be required. For complete information on installation procedures for the optional gas furnace, refer the PVF/PVG Indirect Gas-Fired Heat Module Installation, Operation, and Maintenance Manual.

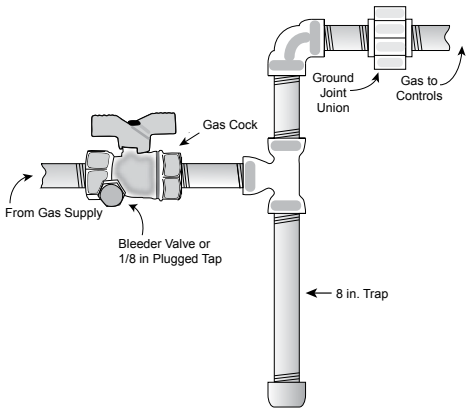

Typical Gas Supply Piping Connection

Optional Gas Piping

Units with indirect gas-fired furnaces require field-supplied and installed gas supply piping.

Housing Size	Total Heating Capacity (Input in MBH)	Gas Connection Size	Max Gas Pressure
0	75	¾” NPT	14 in. wg.
	100		
	150		
	200		
1	100	¾” NPT	14 in. wg.
	200		
	300		
2	300	¾” NPT	14 in. wg.
	400		
	500		
4	600	¾” NPT	14 in. wg.
	800		
	1000	1” NPT	
	1200		

NOTE

Only applies to Heatco furnaces in the 4-1 housing size. A ¼” NPT condensate drain connection is provided in the flue box for duct furnaces with vertical or horizontal top mounted burner trays, to remove condensate from inside the heat exchanger. Since heat exchangers are under negative pressure, a P-trap should be used when connecting condensate drain lines. Metal condensate drain lines should have corrosion resistance at least equal to that of 304 SS.

⚠ WARNING

Never drill holes in the roof of the unit! There is high voltage wiring located between the inner and outer roof panels. Damage to the wiring could cause severe bodily harm or death.

© 2024 Mitsubishi Electric US, Inc.

Water Coil Piping Installation

Optional Coil Piping

Condensate Drain Trap

This unit is equipped with a stainless steel condensate pan with a stainless steel connection is installed underneath the cooling coil. It is important that the condensate pan drain connection must be fitted with a P trap to ensure proper drainage of condensate while maintaining internal static pressures and to prevent migration of sewer gas back into the unit.

A P trap assembly (kit) is supplied with each unit, and is to be assembled and installed as local conditions require and according to the assembly instructions provided with the P trap. If local and area codes permit, the condensate may be drained back onto the roof, but a drip pad should be provided beneath the outlet. If local and area codes require a permanent drain line, it should be fabricated and installed in accordance with Best Practices and all codes.

In some climates, it will be necessary to provide freeze protection for the P trap and drain line. The P trap should be kept filled with water or glycol solution at all times and it should be protected from freezing to protect the P trap from damage. If severe weather conditions occur, it may be necessary to fabricate a P trap and drain line of metal and install a heat tape to prevent freezing.

MPC units with polymer membrane cores include drain pans installed underneath the cores. The factory-installed drain caps should only be removed during cleaning. Do not install drain traps on the core drain pans.

Condensate Overflow Switch

This unit is equipped with an optional factory-mounted condensate overflow switch. In the event that a high level of condensate is detected, the microprocessor controller will trigger an alarm and shutdown the unit.

© 2024 Mitsubishi Electric US, Inc.

Electrical Information

⚠ WARNING

The roof lining contains high voltage wiring. To prevent electrocution, do not puncture the interior or exterior panels of the roof.

⚠ WARNING

To prevent injury or death due to electrocution or contact with moving parts, lock disconnect switch open. For units with a gas furnace, if you turn off the power supply, turn off the gas.

⚠ WARNING

RISK OF ELECTRIC SHOCK CAN CAUSE INJURY OR DEATH: System contains oversize protective earthing (grounding) terminal which shall be properly connected.

IMPORTANT

Before connecting power to the unit, read and understand the following instructions and wiring diagrams. Complete wiring diagrams are attached on the inside of the control center door(s).

IMPORTANT

All wiring should be done in accordance with the latest edition of the National Electric Code ANSI/NFPA 70 and any local codes that may apply. In Canada, wiring should be done in accordance with the Canadian Electrical Code.

IMPORTANT

The equipment must be properly grounded and bonded. Any wiring running through the unit in the airstream must be protected by metal conduit, metal clad cable or raceways.

CAUTION

If replacement wire is required, it must have a temperature rating of at least 105ºC, except for an energy cut-off or sensor lead wire which must be rated to 150ºC.

DANGER

High voltage electrical input is needed for this equipment. This work should be performed by a qualified electrician.

CAUTION

Any wiring deviations may result in personal injury or property damage. Manufacturer is not responsible for any damage to, or failure of the unit caused by incorrect final wiring.

Determine the Size of the Main Power Lines

The unit's nameplate states the voltage and the unit's MCA. The main power lines to the unit should be sized accordingly. The nameplate is located on the outside of the unit on the control panel side.

Determine the Size of Electric Heater Wiring

An optional electric heater may require a separate power supply. The power connection should be made to the factory-provided electric heater disconnect and must be compatible with the ratings on the nameplate, supply power voltage, phase and amperage. Consult ANSI/NFPA 70 and CSA C22.1 for proper conductor sizing.

Provide the Opening(s) for the Electrical Connections

Electrical openings vary by unit size and arrangement and are field-supplied.

Connect the Power Supplies

Connect the main power lines and electric heater power lines to the disconnect switches or terminal blocks and main grounding lug(s). Torque field connections to manufacturer's recommendations.

Wire the Optional Convenience Outlet

The convenience outlet requires a separate 115V power supply circuit. The circuit must include short circuit protection which may need to be supplied by others.

Connect Field-Wired Low Voltage Components

Most factory-supplied electrical components are prewired. To determine what electrical accessories require additional field-wiring, refer to the unit-specific wiring diagram located on the inside of the control center access door.

The low voltage control circuit is 24 VAC and control wiring should not exceed 0.75 ohms.

Control wires should not be run inside the same conduit as that carrying the supply power. Make sure that field-supplied conduit does not interfere with access panel operation. All low voltage wiring should be run in conduit wherever it may be exposed to the weather.

If wire resistance exceeds 0.75 ohms, an industrial-style, plug-in relay should be added to the unit control center and wired in place of the remote switch (typically between terminal blocks R and G on the terminal strip. The relay must be rated for at least 5 amps and have a 24 VAC coil. Failure to comply with these guidelines may cause motor starters to "chatter" or not pull in which can cause contactor failures and/or motor failures.

Field-Provided Disconnect

If field-installing an additional disconnect switch, it is recommended that there is at least four feet of service room between the switch and system access panels. When providing or replacing fuses in a fusible disconnect, use dual element time delay fuses and size according to the rating plate.

© 2024 Mitsubishi Electric US, Inc.

Control Center Components

Main Control Center Components

Image represents a typical installation for MP-1-1 or MPE-2-1. Components and locations will vary on MPE-4-0,-5-1, MP and MPF models.

Electrical Cabinet

1. Power distribution block; high voltage supply is terminated here
2. Fuse holders
3. Phase monitor
4. Unit Disconnect
5. Condensing fan motor contactors
6. Wheel motor contactor
7. Compressor motor contactors

Controls Cabinet

8. Transformer
9. VFDs
10. Microprocessor controller
11. Monitoring points
12. Low voltage terminal strip
13. Relays
14. Dirty filter switches
15. Wheel pressure switch
16. Outdoor airflow monitor
17. Exhaust airflow monitor
18. Digital scroll controller

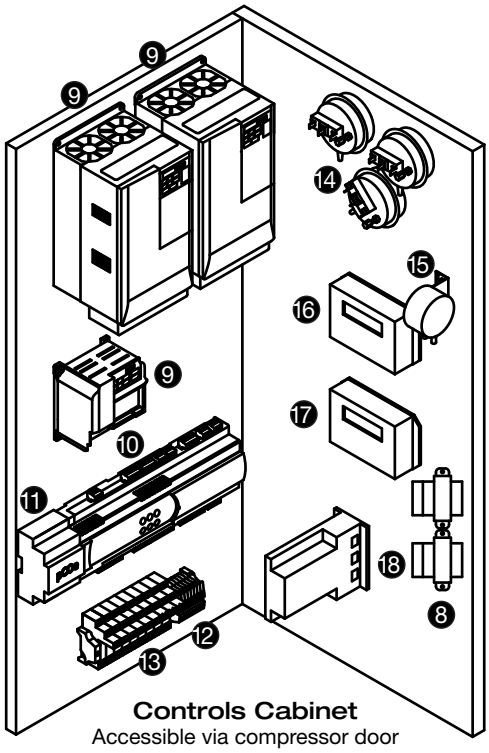

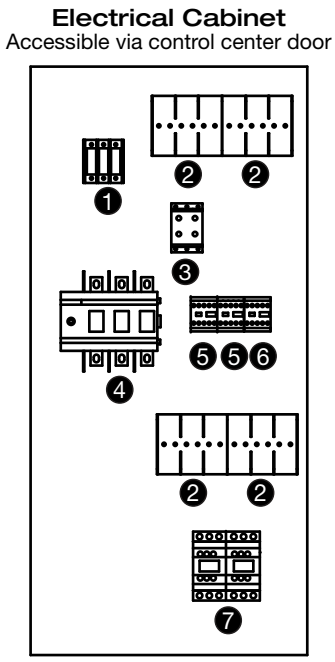

Optional Indirect Gas-Fired Furnace

Note: In some models, two furnaces are installed to provide greater output. When two furnaces are installed, they are in parallel and both will operate at the same time and the same output. Both furnaces will have identical controls.

1. Single-stage valve
2. Modulating valve
3. PCOE expansion board
4. Ignition controller
5. Transformer
6. Combustion blower
7. Burner manifold
8. Collector box

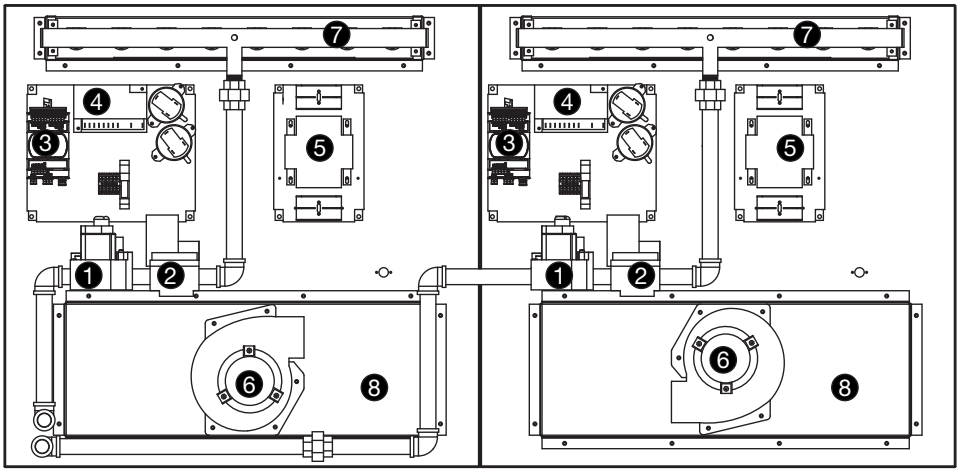

For further information on the optional furnace and its control center, see the Indirect Gas-Fired Heat IOM shipped with the unit.

© 2024 Mitsubishi Electric US, Inc.

Component Operation

Phase Monitor

The unit control circuitry includes a phase monitor that constantly checks for phase reversal, phase imbalance, loss of phase or a power brownout. When it detects a fault, it cuts off the 24 VAC that goes to the low voltage terminal strip, thereby shutting off all motors.

Variable Frequency Drive (VFD)

If a VFD was provided and installed at the factory, it has been pre-set to control the speed of the blower motor for optimum performance. The motor speed needs to be verified during test and balance of the unit.

If the system was configured for Constant Air Volume (CAV), the VFD will operate in an ON/OFF fashion and the speed of the motor will not change. If the system was configured for Variable Air Volume (VAV), the microprocessor will constantly monitor operating conditions and provide a signal to the VFD, changing the VFD output as needed.

The VFD may alternatively be connected to an external signal such as provided by a BMS and be operated by a 0-10 VDC input.

Supply Fan VFD Sequence

Optional Room CO_2 Sensor: The microprocessor will modulate the supply fan based on a comparison of the CO_2 set point to the actual CO_2 levels reported from the sensor. Mechanical high static protection cutoffs must be installed by others to protect the system and equipment from over-pressurization.

Optional Duct Static Pressure Sensor: The microprocessor will modulate the supply fan based on a comparison of the duct static pressure set point to the actual duct static pressure level reported from the sensor. Mechanical high static protection cutoffs must be installed by others to protect the system and equipment from over-pressurization. The manufacturer does not assume responsibility for this.

Optional Building Static Pressure Sensor: The supply fan is modulated based upon the signal from a building static pressure sensor. The microprocessor will modulate the supply fan based on a comparison of the building static pressure set point to the actual building static pressure level reported from the sensor.

Optional Single Zone VAV: The microprocessor will use a space mounted temp sensor to vary heating and cooling capacity and the airflow delivered by the fan to maintain room-air temp at a desired set point.

Optional 0-10 VDC by others to VFD: Supply fan is modulated by a 0-10 VDC, field-provided by others.

Optional Component Operation

Exhaust Fan VFD Sequence

Optional Building Static Pressure Sensor: The exhaust fan is modulated based upon the signal from a building static pressure sensor. The microprocessor will modulate the exhaust fan based upon a comparison of the building static pressure level reported from the sensor.

Optional Outdoor Air Damper Tracking: The microprocessor will proportionally modulate the exhaust fan based upon the outdoor air damper position.

Optional Supply Tracking: The microprocessor will proportionally modulate the exhaust fan based upon the supply fan.

Optional 0-10 VDC by Others to VFD: The supply fan is modulated by a 0-10 VDC provided by others in the field.

Outdoor Air and Recirculated (Recirc) Air Damper Sequence

Optional Room CO_2 Sensor: The microprocessor will proportionally modulate the OA/RA dampers based upon a comparison of the CO_2 set point to the actual CO_2 level reported from the sensor. As the CO_2 level rises, the controller will proportionally modulate the outdoor air damper open, between the minimum and maximum OA position.

Optional Building Pressure: The OA/RA dampers will modulate based upon the signal from a building static pressure sensor. The controller will modulate the dampers, between the minimum and maximum OA positions, based upon a comparison of the building static pressure set point to the actual building static pressure level reported from the sensor.

Exhaust Fan Only Power

The exhaust fan will have a dedicated power circuit where in the case of a power outage, the exhaust fan will still run. A phase monitor will detect an outage or power loss and open the contact, disconnecting all power to the unit and controller. An external signal will need to be sent to a relay to power the exhaust fan, enabling the fan to run at a maximum speed. This sequence is NOT to be used for high temperature exhaust applications.

Service Lights

Service lights provide light to each of the compartments in the energy recovery unit. The lights are wired into the service outlet receptacle on the outside of the unit. The switch to turn on the lights is located in the unit control center.

© 2024 Mitsubishi Electric US, Inc.

Optional Component Operation

Electronically Commutated (EC) Condenser Fans with Inverter Scroll or Digital Scroll Compressors

The EC condenser fan(s) will modulate up and down to maintain the optimal liquid line pressure using built in control sequences within the factory controller. One pressure transducer is provided with each refrigeration circuit for monitoring and the factory controller will ramp condenser fan(s) up or down based on the condenser set point.

Economizer Fault Detection Diagnostics

Provides the status and faults of the air economizer to indicate proper economizer sequence operation. This assures the benefits of free cooling when outdoor conditions are suitable for economizer functions. The fault detection diagnostics system will indicate when free cooling is available and if the outside air damper and recirculation damper are reacting properly. If the dampers are not functioning correctly an alarm will be generated.

Air-Source Heat Pump

Operating Conditions and Limitations

To operate in Cooling mode, the following conditions must be true:

1. Supply air temperature above the minimum low supply temperature limit of 46°F. Below 46°F the inverter compressor will ramp down and stage compressor will be turned off.
2. Outside air temperature above the cooling ambient lockout (55°F, adj.)

To operate in Heating mode, the following conditions must be true:

1. Supply air maximum high temperature limit of 85°F - 120°F based on operating conditions.
2. Supply air temperature above 45°F for 10 tons and greater, and 53°F for 7 tons and less.
3. Outside air temperature above the low ambient lockout (0°F, adj.)

For more information on air-source heat pump operation, reference the supplemental ***Reference Guide for Microprocessor Controller.***

IMPORTANT

Air-source heat pumps are equipped with a defrost cycle to remove ice from the outdoor coil. During defrost cycles, melted water may drip from the bottom of the refrigeration section under the outdoor coil. In cold climates, proper drainage/heat tape must be installed under the outdoor coil to prevent the buildup of ice on the roof.

IMPORTANT

Melted water from snow accumulation on the unit roof can be sucked into outdoor fans, resulting in ice formation on fan blades under certain conditions. Remove snow accumulation from the unit roof and outdoor coil section after snow storms.

Airflow Monitor

IMPORTANT

For the outdoor airflow monitoring device to perform as intended, field calibration is required. Calibration of the airflow monitoring device requires an independent measurement of airflow and should be performed when the system undergoes test and balance.

A factory-wired, mounted, and powered airflow monitoring system is provided in the outdoor, supply, and/or exhaust air streams. The airflow control system displays outdoor, supply, and/or exhaust air in actual cubic feet per minute (CFM) at factory controller or can be read by a building management system if communication is established.

Operation

Outdoor airflow monitoring is accomplished using two thermal dispersion sensors that accurately measure airflow velocity down to zero feet per minute (fpm). The airflow controller takes the average measurement for two sensor configurations, and determines the outdoor airflow rate based on the effective intake area. Field calibration of the outdoor airflow monitoring device determines the effective intake area of the unit. For additional information on how to navigate through the outdoor airflow controller menus, refer to technical manuals from GreenTrol® Automation Inc. at www.greentrol.com.

Supply and/or exhaust airflow monitoring is accomplished by measuring the pressure drop across the fan inlet venture. The airflow is then calculated by the factory controller based on the measured pressure drop and a K-Factor specific for each fan size.

Hot Gas Reheat Valve

Units equipped with a reheat coil use a three-way valve with actuator to control the supply air discharge temperature of the unit during dehumidification mode. The unit controller provides a 0-10 VDC signal to control the amount of reheat to meet the supply temperature set point.

Controls by Others

The reheat coil needs to be purged to ensure adequate oil return. It is recommended that every six hours of reheat compressor run time should initiate a six minute purge cycle. During the purge cycle, the reheat valve should be modulated to 100% open to the reheat coil.

© 2024 Mitsubishi Electric US, Inc.

Optional Component Operation

VFD Compressor

If the VFD compressor option is included, the compressor VFD is mounted in the end of the condensing section. Condensing section internal components are accessible via the access panel on the side of the condenser coil.

Envelope Control

The unit controller tracks the operating point of the VFD compressor within the operating envelope at all times. If the operating point is out of the envelope, the controller will take action to bring it back in. If unsuccessful, the controller will shut down the compressor. DO NOT operate the compressor VFD in hand mode because the envelope control safeties will not be in place. Refer to the controls IOM for more information on envelope control.

Electronic Expansion Valve

An electronic expansion valve is provided on the VFD compressor circuit to ensure tight superheat control throughout the compressor modulation band. The EXV acts as a liquid line solenoid valve when the compressor is off to prevent refrigerant migration.

Crankcase Heat

The VFD compressor will be heated by the compressor stator. To ensure optimal performance and reliability, do not disable stator heat. All other compressors will be provided with a crankcase heater.

Oil Return Management

The compressor VFD has an oil return purge cycle such that if the compressor has been operating below a set RPM for a set period of time, the VFD will accelerate the compressor to ensure sufficient lubrication.

DO NOT disable the oil return management function.

DO NOT operate the compressor VFD in hand mode because the oil return management will not be operational.

Pressure Relief Device

A fusible plug is included with all air-source heat pump configurations and models RV-75 and RVE-150 configured as packaged DX cooling 30 tons or higher with hot gas reheat. Fusible plug will be integral to receiver and accumulator.

These configurations do not have the means to be vented externally. See local mechanical codes for mounting restrictions which includes indoor mounting and mounting less than 15ft above ground level.

Ultraviolet Germicidal Irradiation (UVGI)

UV-C lights are mounted downstream of the cooling coil, provide coil surface and drain pan disinfection. The lights are factory powered and are on when the supply blower is running. A kill switch on the coil access door turns the lights off when that door is open.

IMPORTANT

Unintended use of the appliance or damage to the housing may result in the escape of dangerous UV-C radiation. UV-C radiation may, even in small doses, cause harm to the eyes and skin. Appliances that are obviously damaged must not be operated.

OPERATIONAL

Doors and access panels bearing the ultraviolet radiation hazard symbol which may have UV-C SPECTRAL IRRADIANCE greater than 1,7 µW/cm2 are provided with an interlock switch to interrupt the power to the UV-C LAMPS for your safety. Do not over-ride.

Before opening doors and access panels bearing the ULTRAVIOLET RADIATION hazard symbol for the conducting USER MAINTENANCE, it is recommended to disconnect the power.

UV-C BARRIERS bearing the ULTRAVIOLET RADIATION hazard symbol should not be removed.

Do not operate UV-C LAMPS outside of the appliance.

Needlepoint Bipolar Ionization (NPBI®)

Needlepoint bipolar ionizers are mounted on the fan inlet cone(s) and provide air disinfection. The ionizers are factory-powered and are on when there is power to the unit disconnect.

Dirty Filter Sensor

Dirty filter sensors monitor pressure drop across the outdoor air filters, exhaust air filters, or both. If the pressure drop across the filters exceeds the set point, the sensor will close a set of contacts in the unit control center. Field-wiring of a light (or other alarm) to these contacts will notify maintenance personnel when filters need to be replaced. The switch has not been set at the factory due to external system losses that will affect the switch. This switch will need minor field adjustments after the unit has been installed with all ductwork complete. The dirty filter switch is mounted in the exhaust inlet compartment next to the unit control center or in unit control center.

Microprocessor Control

The microprocessor controller is specifically designed and programmed to optimize the performance of the unit with supplemental heating and cooling. This option ensures that the outdoor air is conditioned to the desired discharge conditions. The controller and accompanying sensors are factory-mounted, wired and programmed. Default settings are pre-programmed, but are easily field-adjustable.

The microprocessor controller can be interfaced with a Building Management System through, BACnet® or ModBus.

Please refer to the Installation, Operation and Maintenance manual for detailed information.

Unoccupied Recirculation Damper

The unoccupied recirculation option provides ae

© 2024 Mitsubishi Electric US, Inc.

recirculation damper from the return air intake to the supply airstream. If equipped with a room temperature and/or relative humidity sensor, the unit can cycle on to maintain unoccupied room set points if there is a call for unoccupied heating, cooling, or dehumidification. During the unoccupied mode, the supply and exhaust (if equipped) fans will be off unless there is a call for cooling, heating, or dehumidification in the space.

Frost Control

Extremely cold outdoor air temperatures can cause moisture condensation and frosting on the energy recovery device. Frost control is an optional feature that will prevent/control frosting.

Energy Core

Available options are:

1. Energy core bypass frost control
2. Timed exhaust frost control
3. Electric preheat frost control

Energy core bypass frost control includes a temperature sensor that is factory installed in the exhaust airstream. When the exhaust air temperature is below set point, the bypass damper modulates to maintain an exhaust air temperature set point. This sequence is included whenever a bypass damper is selected and functions independently of the additional frost control sequences listed below.

Timed exhaust frost control includes a temperature sensor that is factory installed in the exhaust airstream. When the exhaust air temperature is below set point, the supply fan turns off while the exhaust fan remains on.

Electric preheat frost control includes an electric heater (at outdoor air intake) and an outdoor air temperature sensor that is factory installed in the outdoor airstream. When the outdoor air temperature is below set point, the electric preheater energizes. Use the test procedure in the Optional Start-Up Accessories section for troubleshooting.

Polymer Energy Wheel Available options are:

1. Timed exhaust frost control
2. Electric preheat frost control
3. Modulating wheel frost control

These options are provided with a thermodisc mounted in the outdoor air intake compartment and a pressure sensor to monitor pressure drop across the energy wheel. An outdoor air temperature below set point and an increase in pressure drop indicate that frost is occurring. Both the pressure sensor and the outdoor air thermodisc must trigger to initiate frost control. The two sensors together ensure that frost control is only initiated during a real frost condition.

Timed exhaust frost control includes a timer in addition to the thermodisc and wheel pressure sensor. When frost control is initiated, the timer will turn the supply blower off. The default timer setting will shut down the supply fan for 5 minutes every 30 minutes, allowing warm exhaust to defrost the energy wheel. Use the test procedure in the Optional Start-Up Accessories section for troubleshooting.

Electric preheat frost control includes an electric heater (at outdoor air intake) in addition to the thermodisc and wheel pressure sensor. When frost control is initiated, the electric preheater will turn on and warm the air entering the energy wheel. Use the test procedure in the Optional Start-Up Accessories section for troubleshooting.

Modulating wheel frost control includes a variable frequency drive (VFD) in addition to the thermodisc and wheel pressure sensor. When frost control is initiated, the VFD will reduce the wheel speed, reducing effectiveness and preventing condensation and frosting. If the outdoor air temperature is greater than the frost threshold temperature **OR** the pressure differential is less than the set point, the wheel will run at full speed. If the outdoor air temperature is less than set point **AND** the pressure differential is greater than the set point, the wheel will run at reduced speed until the pressure differential falls below the set point. The VFD will be fully programmed at the factory.

Aluminum Energy Wheel

Available options are:

1. Modulating wheel frost control
2. Modulating wheel with electric preheat frost control

These options are provided with a temperature sensor mounted in the exhaust air discharge compartment. Frost control will initiate when the exhaust air temperature is below set point.

Modulating wheel frost control includes a variable frequency drive (VFD) in addition to the exhaust air temperature sensor. When frost control is initiated, the VFD will modulate the wheel speed to maintain exhaust air temperature set point. The VFD will be fully programmed at the factory.

Modulating wheel with electric preheat frost control includes a variable frequency drive (VFD) and electric heater (at outdoor air intake) in addition to the exhaust air temperature sensor. When frost control is initiated, the VFD will modulate the wheel speed to maintain exhaust air temperature set point. The electric heater will turn on when the outdoor air temperature is below set point. The VFD will be fully programmed at the factory.

Rotation Sensor

The rotation sensor monitors energy wheel rotation. If the wheel should stop rotating, the sensor will close a set of contacts in the unit control center. Field-wiring of a light (or other alarm) between terminals R and 12 in the unit control center will notify maintenance personnel when a failure has occurred.

© 2024 Mitsubishi Electric US, Inc.

Factory-Installed Refrigeration System Components

Packaged DX Cooling with Three Way Hot Gas Reheat
MP, MPE

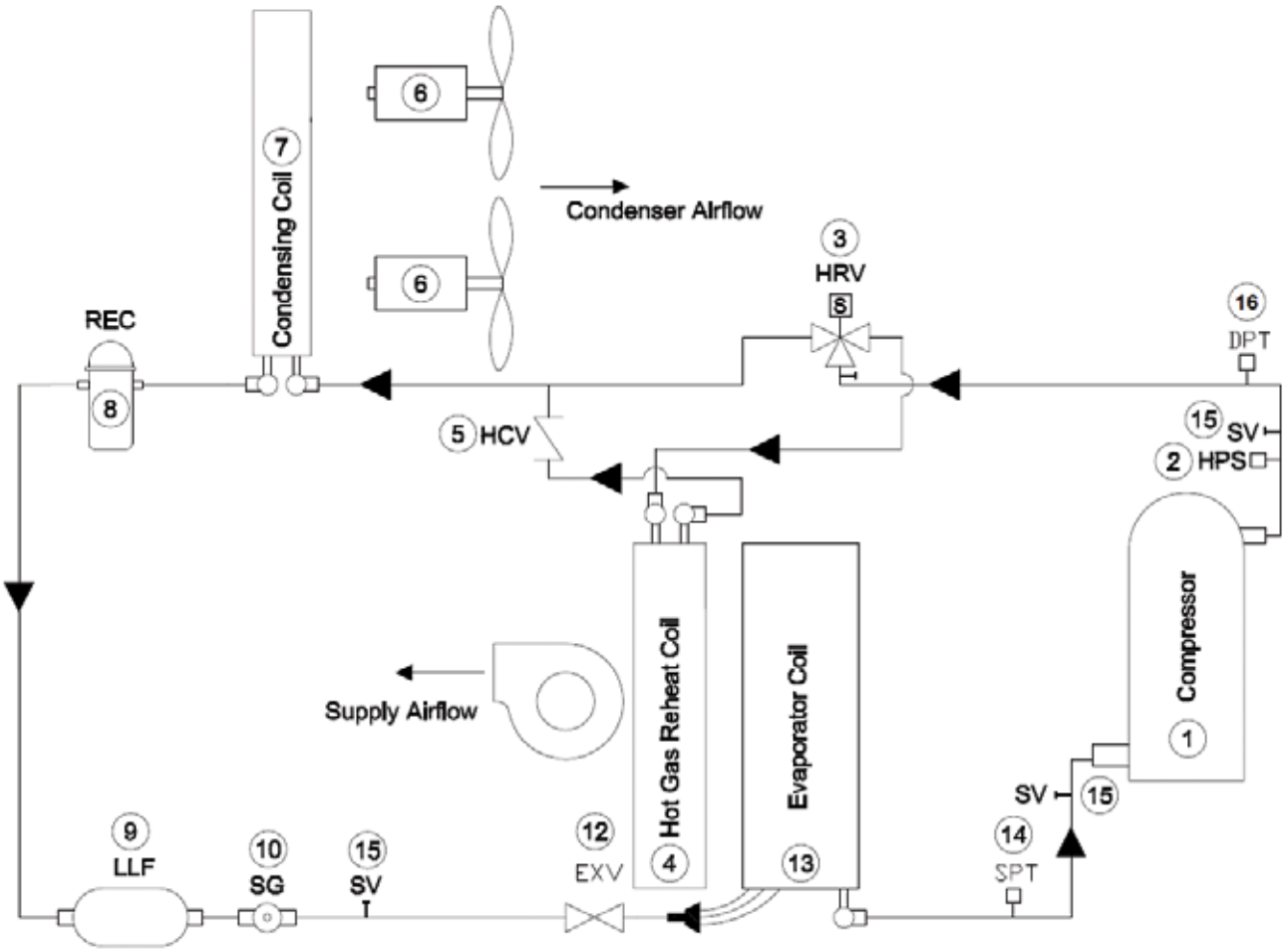

1. **Compressor**
2. **High Limit Pressure Switch**
   The switch opens when refrigerant pressure increases above the set point in the discharge line. A manual reset is then required.
3. **Hot Gas Reheat Valve (optional)**
   Units equipped with a reheat coil use a three-way valve with actuator to control the supply air discharge temperature of the unit during dehumidification mode. The unit controller provides a 0-10 VDC signal to control the amount of reheat to meet the supply temperature set point
4. **Hot Gas Reheat Coil (Optional)**
5. **Hot Gas Reheat Check Valve (Optional)**
6. **Condenser Fan(s)**
7. **Condensing Coil**
8. **Accumulator and Integral Pressure Relief Valve**
   Typical refrigerant pressure relief location. Device includes a fuse plug that operates as a safety relief when dangerous temperature builds within the refrigeration system.
9. **Liquid Line Filter Drier**
10. **Sight Glass**
12. **Electronic Expansion Valve (EXV)**
    This valve controls the flow of liquid refrigerant entering the evaporator coil by maintaining a constant superheat.
13. **Evaporator Coil**
14. **Suction Pressure Transducer**
15. **Service Access Ports**
16. **Discharge Pressure Transducer**

© 2024 Mitsubishi Electric US, Inc.

Factory-Installed Refrigeration System Components

Air-Source Heat Pump with Three Way Hot Gas Reheat

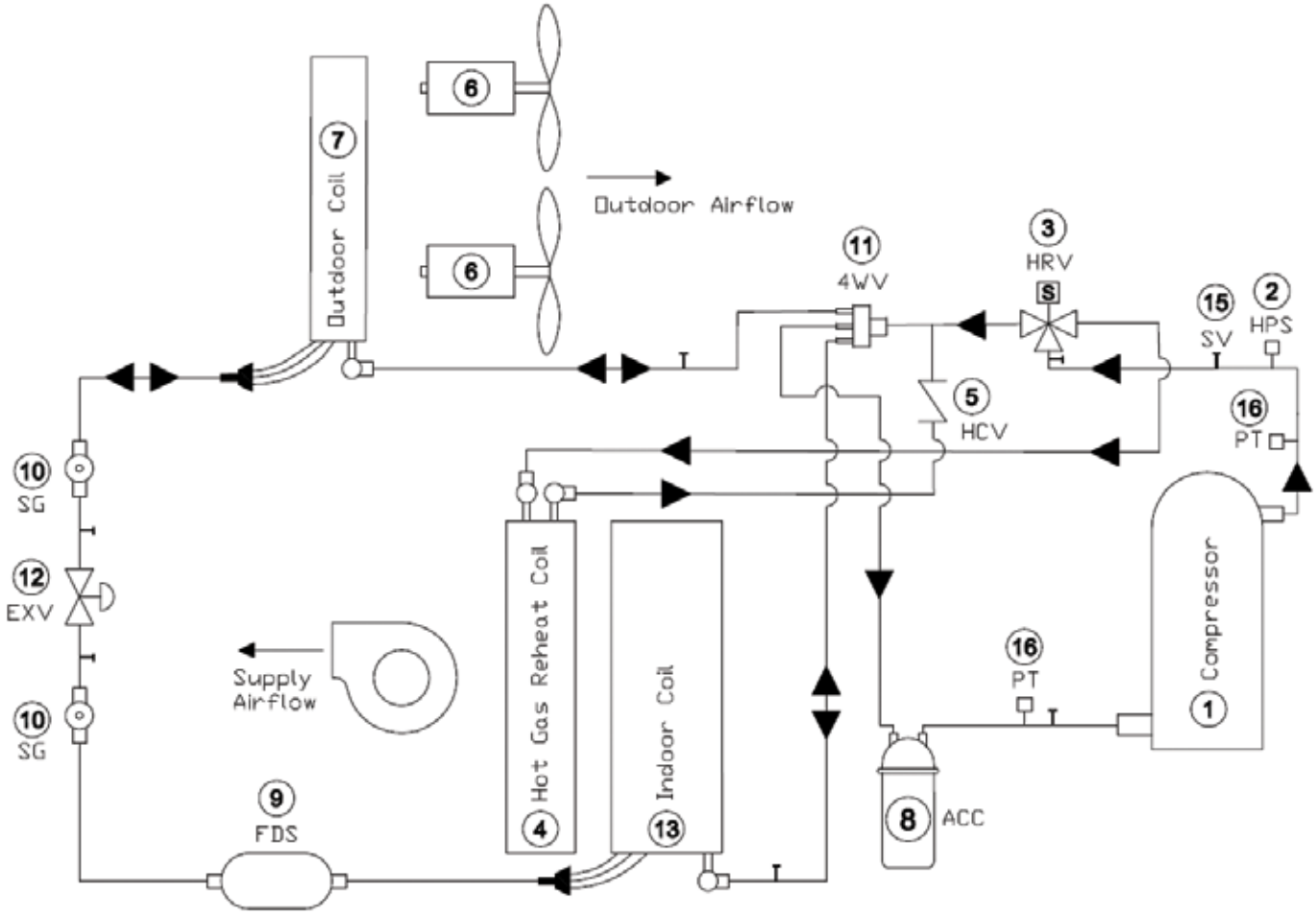

1. **Compressor**
2. **High Limit Pressure Switch**
   The switch opens when refrigerant pressure increases above the set point in the discharge line. A manual reset is then required.
3. **Hot Gas Reheat Valve**
   Units equipped with a reheat coil use a three-way valve with actuator to control the supply air discharge temperature of the unit during dehumidification mode. The unit controller provides a 0-10 VDC signal to control the amount of reheat to meet the supply temperature set point
4. **Hot Gas Reheat Coil**
5. **Hot Gas Reheat Check Valve**
6. **Outdoor Fan(s)**
7. **Outdoor Coil**
8. **Accumulator and Integral Pressure Relief Valve**
   Typical refrigerant pressure relief location. Device includes a fuse plug that operates as a safety relief when dangerous temperature builds within the refrigeration system.
9. **Filter Drier**
10. **Sight Glass**
11. **Four Way Reversing Valve**
    Each compressor circuit is equipped with a reversing valve to reverse the direction of refrigerant flow, switching the unit between heating and cooling mode.
12. **Electronic Expansion Valve (EXV)**
    This valve controls the flow of liquid refrigerant entering the evaporative coil by maintaining a constant superheat
13. **Indoor Coil**
15. **Service Access Ports**
    Typical port locations are shown. Additional valves may be present in the system.
16. **Refrigerant Pressure Transducers**

© 2024 Mitsubishi Electric US, Inc.

Refrigeration System Service Requirements

Personnel working on appliances must be trained by a national training organization or manufacturer that are accredited to teach the relevant national competency standards that may be set in legislation.

The achieved competence should be documented by a certificate.

Work shall be undertaken under a controlled procedure to minimize the risk of a flammable gas or vapor being present while the work is being performed.

All maintenance staff and others working in the local area shall be instructed on the nature of work being carried out. Work in confined spaces shall be avoided.

The area shall be checked with an appropriate refrigerant detector prior to and during work, to ensure the technician is aware of potentially toxic or flammable atmospheres. Ensure that the leak detection equipment being used is suitable for use with all applicable refrigerants, i.e. non-sparking, adequately sealed or intrinsically safe

If any hot work is to be conducted on the refrigerating equipment or any associated parts, appropriate fire extinguishing equipment shall be available to hand. Have a dry powder or CO2 fire extinguisher adjacent to the charging area.

No person carrying out work in relation to a refrigerating system which involves exposing any pipe work shall use any sources of ignition in such a manner that it may lead to the risk of fire or explosion. All possible ignition sources, including cigarette smoking, should be kept sufficiently far away from the site of installation, repairing, removing and disposal, during which refrigerant can possibly be released to the surrounding space. Prior to work taking place, the area around the equipment is to be surveyed to make sure that there are no flammable hazards or ignition risks. “No Smoking” signs shall be displayed.

Ensure that the area is in the open or that it is adequately ventilated before breaking into the system or conducting any hot work. A degree of ventilation shall continue during the period that the work is carried out. The ventilation should safely disperse any released refrigerant and preferably expel it externally into the atmosphere.

Where electrical components are being changed, they shall be fit for the purpose and to the correct specification. At all times the manufacturer’s maintenance and service guidelines shall be followed. If in doubt, consult the manufacturer’s technical department for assistance.

The following checks shall be applied to installations using flammable refrigerants:

- The actual refrigerant charge is in accordance with the room size within which the refrigerant containing parts are installed;
- The ventilation machinery and outlets are operating adequately and are not obstructed;
- If an indirect refrigerating circuit is being used, the secondary circuit shall be checked for the presence of refrigerant;
- Marking to the equipment continues to be visible and legible. Markings and signs that are illegible shall be corrected;
- Refrigerating pipe or components are installed in a position where they are unlikely to be exposed to any substance which may corrode refrigerant containing components, unless the components are constructed of materials which are inherently resistant to being corroded or are suitably protected against being so corroded.

Repair and maintenance to electrical components shall include initial safety checks and component inspection procedures. If a fault exists that could compromise safety, then no electrical supply shall be connected to the circuit until it is satisfactorily dealt with. If the fault cannot be corrected immediately but it is necessary to continue operation, an adequate temporary solution shall be used. This shall be reported to the owner of the equipment so all parties are advised. Initial safety checks shall include:

- Capacitors are discharged, this shall be done in a safe manner to avoid possibility of sparking
- No live electrical components and wiring are exposed while charging, recovering or purging the system; that there is continuity of earth bonding.
- Sealed electrical components shall be replaced.
- Intrinsically safe components must be replaced.

Check that cabling will not be subject to wear, corrosion, excessive pressure, vibration, sharp edges or any other adverse environmental effects. The check shall also take into account the effects of aging or continual vibration from sources such as compressors or fans.

Under no circumstances shall potential sources of ignition be used in the searching for or detection of refrigerant leaks. A halide torch (or any other detector using a naked flame) shall not be used. The following leak detection methods are deemed acceptable for all refrigerant systems. Electronic leak detectors may be used to detect refrigerant leaks but, in the case of flammable refrigerants, the sensitivity may not be adequate, or may need re-calibration. (Detection equipment shall be calibrated in a refrigerant-free area.) Ensure that the detector is not a potential source of ignition and is suitable for the refrigerant used. Leak detection equipment shall be set at a percentage of the LFL of the refrigerant and shall be calibrated to the refrigerant employed, and the appropriate percentage

© 2024 Mitsubishi Electric US, Inc.

of gas (25 % maximum) is confirmed. Leak detection fluids are also suitable for use with most refrigerants but the use of detergents containing chlorine shall be avoided as the chlorine may react with the refrigerant and corrode the copper pipe-work.

If a leak is suspected, all naked flames shall be removed/extinguished. If a leakage of refrigerant is found which requires brazing, all of the refrigerant shall be recovered from the system, or isolated (by means of shut off valves) in a part of the system remote from the leak. Removal of refrigerant shall be according to Clause DD.9 of UL60445-2-40 4th edition or applicable standards.

Removal and evacuation

When breaking into the refrigerant circuit to make repairs – or for any other purpose – conventional procedures shall be used. However, for flammable refrigerants it is important that best practice be followed, since flammability is a consideration. The following procedure shall be adhered to:

safely remove refrigerant following local and national regulations;

- Evacuate;
- Purge the circuit with inert gas;
- Evacuate;
- Continuously flush or purge with inert gas when using flame to open circuit;
- Open the circuit.

The refrigerant charge shall be recovered into the correct recovery cylinders if venting is not allowed by local and national codes. For appliances containing flammable refrigerants, the system shall be purged with oxygen-free nitrogen to render the appliance safe for flammable refrigerants. This process might need to be repeated several times. Compressed air or oxygen shall not be used for purging refrigerant systems. For appliances containing flammable refrigerants, refrigerants purging shall be achieved by breaking the vacuum in the system with oxygen-free nitrogen and continuing to fill until the working pressure is achieved, then venting to atmosphere, and finally pulling down to a vacuum (optional for A2L). This process shall be repeated until no refrigerant is within the system (optional for A2L). When the final oxygen-free nitrogen charge is used, the system shall be vented down to atmospheric pressure to enable work to take place. The outlet for the vacuum pump shall not be close to any potential ignition sources, and ventilation shall be available.

Charging procedures

In addition to conventional charging procedures, the following requirements shall be followed.

- Ensure that contamination of different refrigerants does not occur when using charging equipment. Hoses or lines shall be as short as possible to minimize the amount of refrigerant contained in them.
- Cylinders shall be kept in an appropriate position according to the instructions.
- Ensure that the refrigerating system is earthed prior to charging the system with refrigerant.
- Label the system when charging is complete (if not already).
- Extreme care shall be taken not to overfill the refrigerating system.
- Prior to recharging the system, it shall be pressure-tested with the appropriate purging gas. The system shall be leak-tested on completion of charging but prior to commissioning. A follow up leak test shall be carried out prior to leaving the site.

Decommissioning

Before carrying out this procedure, it is essential that the technician is completely familiar with the equipment and all its detail. It is recommended good practice that all refrigerants are recovered safely. Prior to the task being carried out, an oil and refrigerant sample shall be taken in case analysis is required prior to re-use of recovered refrigerant. It is essential that electrical power is available before the task is commenced.

A. Become familiar with the equipment and its operation.
B. Isolate system electrically
C. Before attempting the procedure, ensure that:
    a. Mechanical handling equipment is available, if required, for handling refrigerant cylinders;
    b. All personal protective equipment is available and being used correctly;
    c. The recovery process is supervised at all times by a competent person;
    d. Recovery equipment and cylinders conform to the appropriate standards.
D. Pump down refrigerant system, if possible
E. If a vacuum is not possible, make a manifold so that refrigerant can be removed from various parts of the system.
F. Make sure that cylinder is situated on the scales before recovery takes place.
G. Start the recovery machine and operate in accordance with instructions.
H. Do not overfill cylinders (no more than 80 % volume liquid charge).
I. Do not exceed the maximum working pressure of the cylinder, even temporarily.
J. When the cylinders have been filled correctly and the process completed, make sure that the cylinders and the equipment are removed from site promptly and all isolation valves on the equipment are closed off.

© 2024 Mitsubishi Electric US, Inc.

K. Recovered refrigerant shall not be charged into another refrigerating system unless it has been cleaned and checked.

Equipment shall be labelled stating that it has been de-commissioned and emptied of refrigerant. The label shall be dated and signed. For appliances containing flammable refrigerants, ensure that there are labels on the equipment stating the equipment contains flammable refrigerant.

Recovery

When removing refrigerant from a system, either for servicing or decommissioning, it is recommended good practice that all refrigerants are removed safely.

When transferring refrigerant into cylinders, ensure that only appropriate refrigerant recovery cylinders are employed. Ensure that the correct number of cylinders for holding the total system charge is available. All cylinders to be used are designated for the recovered refrigerant and labelled for that refrigerant (i.e. special cylinders for the recovery of refrigerant). Cylinders shall be complete with pressure-relief valve and associated shut-off valves in good working order. Empty recovery cylinders are evacuated and, if possible, cooled before recovery occurs.

The recovery equipment shall be in good working order with a set of instructions concerning the equipment that is at hand and shall be suitable for the recovery of the flammable refrigerant. If in doubt, the manufacturer should be consulted. In addition, a set of calibrated weighing scales shall be available and in good working order. Hoses shall be complete with leak-free disconnect couplings and in good condition.

The recovered refrigerant shall be processed according to local legislation in the correct recovery cylinder, and the relevant waste transfer note arranged. Do not mix refrigerants in recovery units and especially not in cylinders.

If compressors or compressor oils are to be removed, ensure that they have been evacuated to an acceptable level to make certain that flammable refrigerant does not remain within the lubricant. The compressor body shall not be heated by an open flame or other ignition sources to accelerate this process. When oil is drained from a system, it shall be carried out safely.

Reference the Quick Start Guide for instructions on how to determine if additional refrigerant charge is necessary. Note additional refrigerant in the Charge Add section of the charge label and calculate the resulting charge in the Total Charge section.

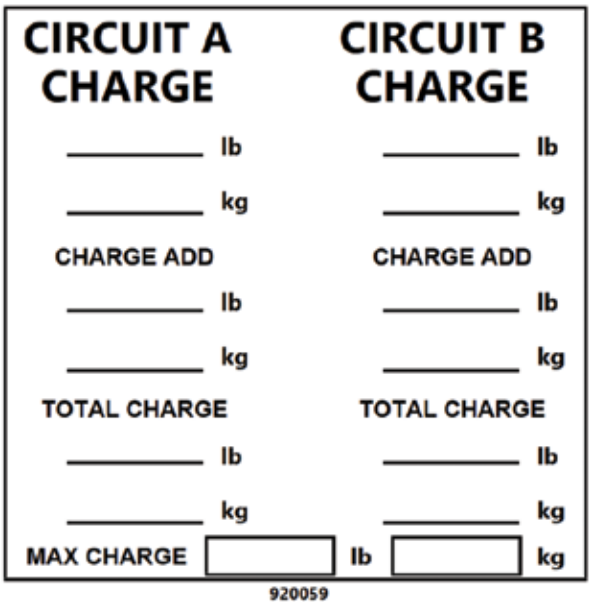

Refrigerant Leak Detection System

Unit equipped with refrigerant leak detection sensors. In the event of a leak in the air tunnel, the unit will move stagnant refrigerant from within the unit, duct, and space ensuring proper dilution. Alarm outputs available for monitoring and external action requirements which includes opening of zone dampers in the ductwork, disabling duct mounted electric resistance heaters, and/or enabling mechanical ventilation if required. These outputs are available to the building management system or through hardwire mitigation system contacts in the unit control section.

Verification of the mitigation system response must be performed at start-up by removing the A2L mitigation test jumper found in the control section of the unit. Additional testing may be required by local code.

The refrigerant sensors installed in the appliance will initiate a safety sequence if a leak is detected. Maintain that the sensor is free of any dust or other contaminants. The alarm status is available in the form of an electronic signal from the appliance controller and a relay dry contact suitable for building safety sequences. The end of life of the sensor will result in the appliance operating and displaying that there is a leak detected, please reference the blink code on the bottom of the sensor and order a new sensor from the OEM.

Sensor blink code status:

Solid green = sensor power-up and self-test

Blinking green = normal operation (heartbeat)

Solid red = alarm state – gas detected

Blinking red = sensor fault – replace sensor

© 2024 Mitsubishi Electric US, Inc.

Start-Up Components

Fan

The fan should be checked for free rotation. If any binding occurs, check for concealed damage and foreign objects in the fan housing.

CAUTION

When operating conditions of the fan are to be changed (speed, pressure, temperature, etc.), consult manufacturer to determine if the unit can operate safely at the new conditions.

Supply Fan (Plenum Type)

The unit contains one or two plenum supply fans located on the end of the unit opposite the outdoor air intake and may optionally have a relief air blower which is referred to as an exhaust blower in this document. Efficient fan performance can be maintained by having the correct offset.

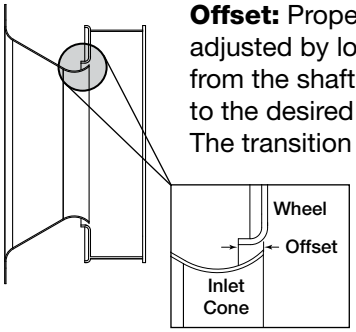

Offset: Proper offset, or overlap, is adjusted by loosening the wheel hub from the shaft and moving the wheel to the desired position along the shaft. The transition between the inlet cone and the wheel should be as shown; there is a smooth feel to the profile when moving one component to the other.

Fan Size	Offset (inches)	Tolerance (inches)
ER35C	5/32	± 1/32
ER45C	3/16	± 1/32
ER50C	13/64	± 1/32
ER56C	1/4	± 1/32
PDL-355	5/32	± 1/32
PRM-450	3/16	± 1/32
PRM-560	15/64	± 1/32

Refer to the respective Installation, Operation and Maintenance Manual shipped with this unit for additional start-up and maintenance information regarding the plenum fan.

Fan Wheel Rotation Direction

Check for proper wheel rotation by momentarily energizing the fan. Rotation is determined by viewing the wheel from the drive side and should match the rotation decal affixed to the fan housing.

If the wheel is rotating the wrong way, direction can be reversed by interchanging any two of the three electrical leads. Check for unusual noise, vibration or overheating of the bearings. Refer to the Troubleshooting portion of this manual if a problem develops.

Supply/Exhaust Fan

The optional exhaust fan is a direct-drive plenum type. Fan speed is controlled by a VFD which, in turn, is controlled by the microprocessor controller or by an external signal. Motor speed will be set on the VFD during the unit Test and Balance, but after that, the VFD will not normally be changed. Always check the motor amperage rating shown on the motor nameplate when changing the fan RPM. All access doors must be installed except the control center door.

Vibration

Vibration Causes

Off axis or loose components
Drive component unbalance
Poor inlet / outlet conditions
Foundation stiffness

Excessive vibration may be experienced during initial start-up. Left unchecked, excessive vibration can cause a multitude of problems, including structural and/or component failure. The most common sources of vibration are listed.

Many of these conditions can be discovered by careful observation. Refer to the Troubleshooting section of this manual for corrective actions. If observation cannot locate the source of vibration, a qualified technician using vibration analysis equipment should be consulted.

Generally, fan vibration and noise is transmitted to other parts of the building by the ductwork. To eliminate this undesirable effect, the use of flexible connectors is recommended.

Discharge Air Temperature Sensor

Units are supplied with a Discharge Air Temperature Sensor that is to be field-installed prior to unit start-up. The sensor is to be installed at least three duct diameters downstream of the heat exchanger. The sensor must be connected directly to the microprocessor controller. All other sensors and low voltage devices are to be connected to the low voltage terminal strip in the control center. The discharge air sensor is shipped loose and can be found in the unit's control center. See the unit-specific wiring diagram for connection locations.

Typical Discharge Air Temperature Sensor

© 2024 Mitsubishi Electric US, Inc.

Start-Up Components

Airflow Monitoring

For additional information on how to navigate through the airflow controller menus, refer to technical manuals from GreenTrol® Automation Inc. at www.greentrol.com. Also refer to the Greenheck Reference Guide for Microprocessor Controller.

Display and Navigation

The LCD screen will by default show the current airflow that is being measured. To enter the menu to set up the monitoring station the user must remove the front cover of the GreenTrol to uncover the navigation buttons. Press and hold the UP and DOWN keys at the same time for 3 seconds to enter the menu.

Enter Button Function - The ENTER button allows the user to go into the selected menu or function, as well as save the selected value.

Up/Down Button Function - The UP/DOWN buttons are used to navigate the menu and to change values in the menu.

Esc Button Function - The ESC button allows the user to exit the current menu or function.

Field Calibration

1. Press UP/DOWN = Setup
2. Press DOWN/ENTER = Setup Wizard
3. Scroll Down to Field Adjust and press ENTER
4. Run FAK wizard and press ENTER
5. Set FAW Int and press ENTER
6. FAW INT = 300 and press ENTER
7. Set number of flows and press ENTER
8. Set flow and press ENTER
9. Set flow to actual CFM measured by Test and Balance and press ENTER
10. Wait for calibration before cycling power
11. Proceed to Communication Setup

Communication Setup

1. Press the UP and DOWN keys at the same time for 3 seconds
2. When SETUP appears on the screen press ENTER
3. Scroll DOWN (twice) to the NETWORK menu and press ENTER
4. When NETOUT appears on the screen, press ENTER; when SET NETOUT appears on the screen, press ENTER again
5. Scroll UP or DOWN to set the NETOUT = MODBUS and then press ENTER
6. Scroll DOWN to NETADDR and press ENTER, when SET NETADDR appears on the screen press ENTER again
7. Scroll UP or DOWN to set the NETADDR to the same address that was listed for the airflow monitor in the microprocessor. For instance, the Outdoor Airflow Monitor screen above has an address of 31. Then press ENTER.
8. Scroll DOWN to NETBAUD and press ENTER, when SET NETBAUD appears on the screen, press ENTER again
9. Scroll UP or DOWN until NETBAUD = 19200, then press ENTER
10. Scroll down to PARITY and press ENTER, when SET PARITY appears on the screen press ENTER again
11. Scroll UP or DOWN until PARITY = NONE2, then press ENTER
12. Once the address is set and the communication wires are connected, “Status” LED should be a steady green and the “RS485” LED should be a quick blinking green LED.

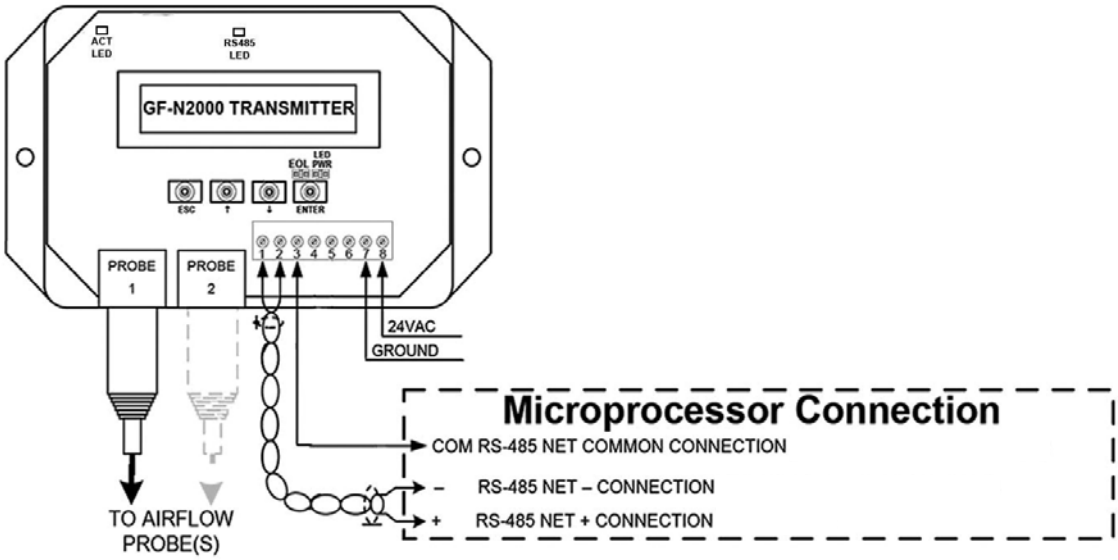

© 2024 Mitsubishi Electric US, Inc.

Start-up Components

Optional Dirty Filter Switch

To adjust the switch, the unit must be running with all of the access doors in place, except for the compartment where the switch is located (exhaust intake compartment). The adjusting screw is located on the top of the switch.

1. Open the filter compartment and place a sheet of plastic or cardboard over 50% of the filter media.

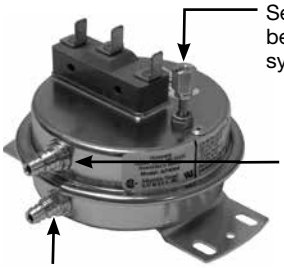

2. Replace the filter compartment door.
3. Check to see if there is power at the alert signal leads (refer to electrical diagram).
4. Whether there is power or not, turn the adjustment screw on the dirty filter gauge (clockwise if you did not have power, counterclockwise if you did have power) until the power comes on or just before the power goes off.
5. Open the filter compartment and remove the obstructing material.
6. Replace the door and check to make sure that you do **not** have power at the alert signal leads. The unit is now ready for operation.

© 2024 Mitsubishi Electric US, Inc.

Troubleshooting – Alarms

Several of the electronic controls in the unit monitor the system for faults and will go into alarm, shutting down the unit or a single function within the unit.

Microprocessor Controller

The microprocessor is located in the main control center. If the microprocessor is in alarm condition, the Alarm button will blink red. Press the Alarm button to see the specific condition or to reset the microprocessor. Refer to the microprocessor IOM for detailed information on fault codes and see the unit-specific wiring diagram.

Phase Monitor

The phase monitor has two LED indicator lights, one red and one green. Green indicates proper operational status, red indicates the unit has detected a fault and is in alarm condition. The alarm LED will blink to show the specific fault and there is a chart printed on the monitor that shows the code for the blinking light. The phase monitor is self-resetting once the alarm condition is corrected. It is located in the main control center.

Variable Frequency Drive (VFD)

Variable frequency drives have a display screen that will show an alarm condition. If a fault such as a voltage spike occurs, the VFD will go into alarm and will not reset until a hard restart is performed. See the unit-specific manufacturer's manual supplied with the unit. VFDs are located in the main control center.

© 2024 Mitsubishi Electric US, Inc.

Troubleshooting – Unit

Symptom	Possible Cause	Corrective Action
Blower fails to operate	Blown fuse or open circuit breaker.	Replace fuse or reset circuit breaker and check amps.
	Defective motor or capacitor.	Replace.
	Motor overloaded.	Reset VFD and check amps.
	Electrical.	Check for On/Off switches. Check for correct supply voltage. Check Control wiring.
Motor starters “chatter” or do not pull in	Control power (24 VAC) wiring run is too long. (Resistance should not exceed 0.75 ohms).	Shorten wiring run to mechanical room or install a relay to turn unit on/off. Consult factory for relay information. Increase wire gauge size so that resistance is 0.75 ohms or less.
	Incoming supply power is less than anticipated. Voltage supplied to starter coil must be within +10% / -15% of nominal voltage stated on the coil.	Need to increase supply power or use a special control transformer which is sized for the actual supply power.
Motor over amps	Static pressures are higher than design.	Check for dirty filters. Improve ductwork.
	Motor voltage incorrect.	Check motor wiring. Check motor nameplate versus supplied voltage.
	Motor horsepower too low.	See specifications and catalog for fan curves to determine if horsepower is sufficient.
	Shorted windings in motor.	Replace motor.
Low airflow (cfm)	Unit damper not fully open.	Adjust damper linkage or replace damper motor.
	System static pressure too high.	Improve ductwork to eliminate losses using good duct practices.
	Blower speed too low.	Check maximum motor RPM and compare with catalog data. Verify that external control wiring is in place if required.
	Fan wheels are operating backwards.	For 3-phase, see Direction of Fan Wheel Rotation Direction in Start-Up, Components section.
	Dirty filter.	Replace filters or follow cleaning procedures in Routine Maintenance section of this manual.
	Leaks in ductwork.	Repair.
	Elbows or other obstructions may be obstructing fan outlet.	Correct or improve ductwork.
High airflow (cfm)	Blower fan speed too high.	Check for correct maximum fan RPM. Decrease maximum fan speed if necessary in the VFD.
	Filter(s) not in place.	Install filters.
	Insufficient static pressure (Ps). (airflow resistance)	Induce Ps into system ductwork. Make sure grilles and access doors are installed. Decrease fan speed if necessary.
Excessive noise or vibration	Fan wheel rubbing on inlet.	Adjust wheel and/or inlet cone. Tighten wheel hub or bearing collars on shaft.
	Bearings.	Replace defective bearing(s). Lubricate bearings. Tighten collars and fasteners.
	Loose wheel on shaft.	Tighten wheel hub.
	Motor base or blower loose.	Tighten mounting bolts.
	Noise being transmitted by duct.	Make sure ductwork is supported properly. Make sure ductwork metal thickness is sized for proper stiffness. Check duct size at discharge to ensure that air velocities are not too high.

Always have a completed Pre-Start-Up Checklist and Start-Up Checklist prior to requesting parts or service information.

© 2024 Mitsubishi Electric US, Inc.

Troubleshooting – Packaged DX Refrigeration Circuit

TROUBLESHOOTING NOTE
Before any components are changed on the refrigeration system, the cause of the failure must be identified. Further problems will exist unless the true cause or problem is identified and corrected.

IMPORTANT
Do not release refrigerant to the atmosphere! If required service procedures include the adding or removing of refrigerant, the service technician must comply with all federal, state and local laws. The procedures discussed in this manual should only be performed by a qualified EPA Certified Technician.

NOTE: Unit is equipped with a phase loss/phase reversal control. If system does not start, check phase of electrical supply.

The first step in troubleshooting a refrigeration circuit is to examine the microprocessor controller and digital scroll compressor controller (if present) and see if there is a fault code. The next step is to check airflow conditions (e.g. improper ductwork, atypical wet bulb / dry bulb, etc.). After these steps have been eliminated, proceed with troubleshooting by following this guide.

Symptom	Possible Cause	Corrective Action
Compressor will not run or does not start	Open disconnect switch or circuit breaker.	Close switch and/or breaker.
	Compressor contactor not closing.	Check voltage to contactor coil, transformer, slave relay, system. Replace parts as necessary.
	Blown fuse or tripped breaker.	Check for reason and repair. Replace fuse after correcting problem.
	Low line voltage.	Check line voltage. If more than 10% from compressor marking, correcting is necessary.
	Compressor motor protector open.	Motor thermal protector automatically resets. Allow time (2 hours) for compressor to cool down so protector will reset. Restart and check for reason overheat occurred.
	Compressor defective.	Check motor for open circuit, short circuit, grounded windings, or burn out. Compressor may be seized; check refrigerant. If necessary, replace compressor.
	High pressure switch open or defective.	If manual reset (high pressure), reset switch. (Switch opens at 605 psi and will not reset above 420 psi for R-454B). Replace if defective.
	Low pressure switch open or defective.	See switch label for setpoint.
	Open room thermostat or control. (No cooling required).	Check room temperature. If temperature is proper, wait for thermostat to close.
	Loose wiring.	Check all wire terminals and tighten as necessary.
Compressor starts but cuts out on low pressure *Low pressure switch cuts out at 25 PSIG*	Low or loss of refrigerant charge.	Check refrigerant pressures and temperatures (subcooling.)
	Airflow restricted.	Check for dirty evaporator coil, dirty filters, dampers closed, iced evaporator coil, improper belt, check motor amps, check duct design.
	Restriction in refrigerant line.	Check refrigerant pressures, look for frosted tubing and components indicating a restriction. Check pressure drop across the filter drier.
	Defective low pressure switch.	Replace.

Always have a completed Pre-Start-Up Checklist and Start-Up Checklist prior to requesting parts or service information.

© 2024 Mitsubishi Electric US, Inc.

Troubleshooting – Packaged DX Refrigeration Circuit

Symptom	Possible Cause	Corrective Action
Compressor starts but cuts out on high pressure switch *High pressure switch cuts out at 605 PSIG*	Refrigerant overcharge.	Check pressures, charge by subcooling.
	Condenser fan motor defective.	Check fan motor.
	Condenser coil inlet obstructed or dirty.	Check coil and clearances. Clean coil if necessary.
	Air or non-condensables in system.	Check high side equalized pressures, check expansion valves.
	Defective high pressure switch.	Replace.
	Restriction in discharge or liquid line.	Check refrigerant line pressures, check expansion valves, replace any defective component.
	Condensing fan relay not pulling in.	Replace.
Compressor cuts out on thermal overload	Low voltage.	Check voltage.
	Sustained high discharge pressure.	Check running amperage and conditions described under “low suction pressure” symptoms.
	High suction and discharge pressures.	Check thermal expansion valve setting, check for air in system. Check air conditions and cfm.
	Defective compressor overload.	If compressor is hot, allow compressor to cool for two hours. Recheck for open circuit.
	Improper refrigerant charge.	Check subcooling.
	Improperly wired.	Review wiring schematics.
	Loose wiring.	Check all connections.
	Defective start relay.	Replace relay.
	Motor windings damaged.	Verify amp draw.
Compressor hums, but will not start	Improperly wired.	Review wiring schematics.
	Low line voltage.	Check voltage.
	Loose wiring.	Check all connections.
	Defective start relay.	Replace relay.
	Motor winding damaged.	Verify amp draws. Replace compressor if necessary.
	Internal compressor mechanical damage.	Replace.
Compressor noisy or vibrating	Refrigerant overcharge.	Check pressures and subcooling.
	Liquid floodback.	Check thermal expansion valve setting. Check for refrigerant overcharge.
	Tubing rattle.	Dampen tubing vibration by taping or clamping. Carefully bend tubing away from contact where possible.
	Scroll compressor rotating in reverse. (3-phase)	Check high and low side pressures during operation to confirm. Rewire for opposite rotation.
	Damaged compressor.	Replace the compressor.
	Improper mounting on unit base.	Check that compressor is properly isolated and mounting bolts are tight.

Always have a completed Pre-Start-Up Checklist and Start-Up Checklist prior to requesting parts or service information.

© 2024 Mitsubishi Electric US, Inc.

Troubleshooting – Packaged DX Refrigeration Circuit

Symptom	Possible Cause	Corrective Action
High suction pressure	Excessive load on evaporator coil.	Check for high entering wet bulb temperature, check for excessive air flow.
	Compressor is unloaded. (digital scroll)	Check digital scroll controller signal and solenoid valve.
	Expansion valve sensing bulb not secured to suction line.	Check the thermal expansion valve, ensure bulb is insulated. Check superheat. If superheat is high, then valve is choking refrigerant flow. • Check bulb for contact. • Adjust valve for superheat ~10°F. • Replace valve powerhead or valve.
	Thermostatic expansion valve. Overfeeding.	Check bulb location and clamping. Adjust superheat. Replace expansion valve power head.
	Room load too large.	Reduce the load or add more equipment.
	Overcharged.	Check pressures and subcooling.
High discharge pressure	Thermal expansion valve setting.	Check thermal expansion setting and calibrate superheat / subcooling.
	Air inlet to condenser coil dirty or obstructed.	Check for proper clearances and possible air recirculating. Clean coil.
	Condenser fan motor defective.	Check condenser fan motor.
	Too much refrigerant.	Check subcooling. Remove excess refrigerant.
	Non-condensable in system.	Remove non-condensable from system.
	Dirty condenser coil.	Clean condenser coil.
	Condenser fan not running or running backwards.	Check electrical circuit and fuse. Check fan cycling controls.
	High load conditions.	Add more equipment or reduce load.
Low suction pressure	Refrigerant undercharge/loss of refrigerant charge.	Check pressures and subcooling.
	Blower running backward.	Confirm blower rotation. If reversed, interchange any two wires from 3-phase disconnect.
	Low entering air temperature. (Low load conditions).	Check entering air wet bulb conditions.
	Refrigerant leak.	Check system for leaks. Repair leaks and add refrigerant.
	Evaporator dirty or iced-up, or airflow restricted.	Clean the coil. Check fan operation. Check airflow.
	Plugged liquid line filter-drier.	Replace filter-drier, check psi across filter.
	Improper hot gas bypass setting (if equipped).	Check setting and correct as required.
	Expansion valve defective, superheat too high or valve too small.	Adjust valve for proper superheat or replace the expansion valve if too small or defective.
	Moisture in system, check sight glass.	Reclaim refrigerant, check for leaks, recharge.

Always have a completed Pre-Start-Up Checklist and Start-Up Checklist prior to requesting parts or service information.

© 2024 Mitsubishi Electric US, Inc.

Troubleshooting – Packaged DX Refrigeration Circuit

Symptom	Possible Cause	Corrective Action
Low discharge pressure	Insufficient refrigerant charge.	Check subcooling, check for leak. Repair leak and add refrigerant.
	Defective or improperly adjusted expansion valve.	Check superheating and adjust thermal expansion valve.
	Low suction pressure.	See “low suction pressure”.
	Faulty condenser temperature controls. (Condensing fan cycle switch).	Check condenser controls and reset to obtain desired condensing temperature.
Compressor short cycles	Thermostat location or controls malfunction.	Check thermostat, check heat anticipator setting.
	Improper refrigerant charge.	Check subcooling, verify superheat.
	Defective high or low pressure control.	Check high or low pressure switch.
	Poor air distribution.	Check ductwork for recirculating.
	Low airflow at evaporator coil.	Check blower operation and airstream restrictions.
	Incorrect unit selection (oversized).	Contact factory.
Compressor loses oil	Refrigerant leak.	Check system for leaks. Repair leaks and add refrigerant.
	Short cycling.	Check low pressure control settings.
	Refrigerant flood back.	Check thermal expansion valve setting. Check for refrigerant overcharge. Check crankcase heater operation.
	Reheat flush cycle inadequate.	Contact factory.
Not enough capacity or lack of performance	Refrigeration undercharged.	Check subcooling. Adjust charge, if necessary.
	Dirty filter or evaporating coil.	Check filter, coil and airflow.
	Dirty or clogged condensing coil.	Check coil and airflow.
	Air or other non-condensables in system.	Check equalized high side pressure with equivalent outdoor temperature.
	Restriction in suction and liquid line.	Check for restrictions in refrigerant circuit.
	Control contacts stuck.	Check wiring.
	Excessive load.	Add more equipment or reduce room load.
Liquid line is frosted or wet	Restriction in liquid line.	Clear restriction upstream of point of frosting. (Note: liquid line frosting in normal on ASHP units).
Suction line is frosting	Insufficient evaporating coil airflow.	Check airflow, check filters, check VFD control signal for proper operation.
	Malfunctioning or defective expansion valve.	Check bulb of thermal expansion valve.
Frost on evaporating coil (Note: Normal on ASHP units in heating mode).	Hot gas bypass valve not functioning properly (if equipped).	Check valve. If defective, replace.
	Manual hot gas bypass valve closed (if equipped).	Open valve.
	Low load or airflow.	Increase airflow, check filters.

Always have a completed Pre-Start-Up Checklist and Start-Up Checklist prior to requesting parts or service information.

© 2024 Mitsubishi Electric US, Inc.

Routine Maintenance

DANGER

Electric shock hazard. Can cause injury or death. Before attempting to perform any service or maintenance, turn the electrical power to the unit to OFF at disconnect switch(es). Unit may have multiple power supplies.

CAUTION

Use caution when removing access panels or other unit components, especially while standing on a ladder or other potentially unsteady base. Access panels and unit components can be heavy and serious injury may occur.

This unit requires minimal maintenance to operate properly. Maintenance requirements for this model vary for each installation and depend greatly on how much the system is used and the cleanliness of the air. Proper maintenance will both increase the life of the system and maintain its efficiency. Maintenance must be performed by experienced technicians and in the case of refrigeration systems, must be done by an EPA certified technician.

Maintenance frequency is based on a presumed nominal use of the system. If the system is being run constantly, the frequency should be adjusted accordingly. If there is seasonal debris in the air which can be drawn into the filters and the coils, they should be checked more frequently. If the system is being used for only a few hours per day, the frequency may be reduced. Use the maintenance log at the end of this manual to record each maintenance session and observations and then establish a maintenance schedule that is appropriate for the installation. The following is provided as a guideline.

Maintenance Frequency:

Monthly

1. External Filter
   Clean metal mesh filters
2. Internal Filters
   Replace MERV 8 filters monthly.
   Adjust replacement schedule for MERV 13 and MERV 14 or other filters as inspection requires.

Semiannually

1. Check motor and motor bearings
   Check for excessive heat, vibration or noise.
   Lubricate bearings in accordance with the motor manufacturer's recommendations.
2. Condensate Drain (if applicable)
   Inspect and clean – refill with water
3. Heat Transfer Coils (if applicable)
   Inspect for cleanliness – clean as required
4. Outdoor Fan Blades and Motor (if applicable)
   Check for cleanliness
   Check all fasteners for tightness
   Check for fatigue, corrosion, wear

Annually

It is recommended that the annual inspection and maintenance occur at the start of the cooling season. After completing the checklist, follow the unit start-up checklist provided in the manual to ensure the refrigeration system operates in the intended matter.

1. Lubrication
   Apply lubricant where required
2. Dampers
   Check for unobstructed operation
3. Blower Wheel and Fasteners
   Check for cleanliness
   Check all fasteners for tightness
   Check for fatigue, corrosion, wear
4. Door Seal
   Check if intact and pliable
5. Wiring Connections
   Check all connections for tightness
6. Cabinet
   Check entire cabinet, inside and out, for dirt buildup or corrosion. Remove accumulated dirt, remove any surface corrosion and coat the area with appropriate finish.
7. UV-C Lamps
   Check bulbs for cracks or damage and replace them after 1 year of use or roughly 9,000 hours. The effectiveness of the lights decreases after 1 year of use. If bulbs are not replaced before 9,000 hours routine maintenance needs to be more frequent to ensure lights are still functioning properly.

   Read the maintenance instructions before opening and applying power to the appliance.

   Prior to cleaning, maintenance, or replacement of the UV-C Lamps, the appliance must be disconnected from the supply mains

   Check bulbs for cracks or damage and replace them after 1 year of use or roughly 9,000 hours. The effectiveness of the lights decreases after 1 year of use. If bulbs are not replaced before 9,000 hours routine maintenance needs to be more frequent to ensure lights are still functioning properly.

   Replacements

   Replacement UV-C Lamps must have the same performance and quality as factory installed lamps. Please contact the local manufacturer's representative with questions or for replacements.

   Replacement lamp requirements: 254 nm wavelength, 4 pin lamp connections, either 33 inch (75W) or 20 inch (46W) depending on configuration

   Factory Lamp part numbers = 482792 (33 inch lamp) or 485072 (20 inch lamp).

© 2024 Mitsubishi Electric US, Inc.

Routine Maintenance

Maintenance Procedures:

Lubrication - Check all moving components for proper lubrication. Apply lubricant where required. Any components showing excessive wear should be replaced to maintain the integrity of the unit and ensure proper operation.

Dampers - Check all dampers to ensure they open and close properly and without binding. Backdraft dampers can be checked by hand to determine if blades open and close freely. Apply power to motorized dampers to ensure the actuator opens and closes the damper as designed.

Gas Furnace - Maintain furnace in accordance with instructions in the Indirect Gas-Fired Heat IOM shipped with this unit.

Fan Motors - Motor maintenance is generally limited to cleaning and lubrication. Cleaning should be limited to exterior surfaces only. Removing dust and grease buildup on the motor housing assists proper cooling. Never wash-down the motor with high pressure spray. Greasing of motors is only intended when fittings are provided. Fan motors typically have two grease fittings. Each motor manufacturer has different lubrication schedules for different models. Go to the motor manufacturer's website and download their maintenance requirements. **Do not over-lubricate motors or use an incompatible grease.** Many fractional motors are permanently lubricated for life and require no further lubrication.

Fan Wheel and Fasteners - Wheels require very little attention when moving clean air. Occasionally oil and dust may accumulate on the wheel causing imbalance. When this occurs, the wheel and housing should be cleaned to assure smooth and safe operation. Inspect fan impeller and housing for fatigue, corrosion, or wear. Routinely check all fasteners, set screws and locking collars on the fan, bearings, drive, motor base and accessories for tightness. A proper maintenance program will help preserve the performance and reliability designed into the fan.

Internal Filter Maintenance - The unit will typically be provided with 2-inch thick pleated paper filters in the airstream. These filters should be checked according to a routine maintenance schedule and replaced as necessary to ensure proper airflow through the unit. Replacement filters shall be of same performance and quality as factory installed filters. Filter must be pleated design with integral metal grid. Two acceptable filter replacements are Aerostat Series 400 or Farr 30/30®. Filters upstream of the coil should be checked regularly. If the filters are dirty, they should be cleaned or replaced. It is important the filters stay clean to maintain desired airflow.

⚠ WARNING

REFER TO GENERAL SAFETY INFORMATION

Do not operate this unit without the filters and birdscreen installed. They prevent the entry of foreign objects such as leaves, birds, etc.

Do not remove access panels or other unit components while standing on a ladder or other unsteady base. Access panels and unit components are heavy and serious injury may occur.

External Filter Maintenance - Aluminum mesh, 2-inch thick filters are located in the supply weatherhood (if the weatherhood option was purchased). These filters should be checked and cleaned on a regular basis for best efficiency. The frequency of cleaning depends upon the cleanliness of the incoming air. These filters should be cleaned by rinsing with a mild detergent in warm water prior to start-up.

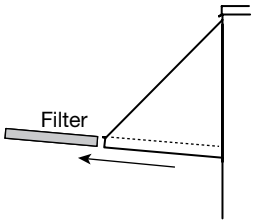

Outdoor Air Intake Hood Mesh Filter Access

Aluminum filters are removable from either the front or side of the weatherhood.

Drain pans in any air conditioning unit will have some moisture in them, therefore, algae and other organisms will grow due to airborne spores and microbial growth. Periodic cleaning is necessary to prevent this buildup from plugging the drain and causing the drain pan to overflow. Inspect twice a year to avoid the possibility of overflow. Also, drain pans should be kept clean to prevent the spread of disease. Cleaning should be performed by qualified personnel.

Coil Maintenance - Coils must be cleaned to maintain maximum performance. Check coils once per year under normal operating conditions and if dirty, brush or vacuum clean. Soiled fins reduce the capacity of the coil, demand more energy from the fan and create an environment for odor and microbial growth to grow and spread through the conditioned zone. High pressure water (700 psi or less) may be used to clean coils with a fin thickness over 0.0095 inches thick. **TEST THE SPRAY PRESSURE** over a small corner of the coil to determine if the fins will withstand the spray pressure. For coils with fragile fins or high fin density, foaming chemical sprays and washes are available. Many coil cleaners use harsh chemicals, so they must be used with caution by qualified personnel only. Care must be taken not to damage the coils, including the fins, while cleaning. **Caution: Fin edges are sharp!**

© 2024 Mitsubishi Electric US, Inc.

Routine Maintenance

Model	Outdoor Air Weatherhood (Aluminum Mesh)	Pre-Wheel Outdoor	Exhaust Filters	Supply Final Filters (Pre-coil)
MP-0	(1) 16x20x1	NA	NA	(1) 12x24 + (1) 24x24
MP-1 (5, 7, 10 tons)	(4) 20x20x2	NA	NA	(4) 20x20
MP-1 (12.5, 15 tons)	(4) 20x20x2	NA	NA	(2) 20x20 + (2) 20x24
MP-2	(4) 25x25x2	NA	NA	(3) 16x20 + (3) 20x20
MP-4	(12) 16x20x2	NA	NA	(8) 16x24 + (4) 20x24
MPE-0	(2) 16x20x2	(2) 16x20x2	(1) 24x24x2	(1) 12x24 + (1) 24x24
MPE-1 (5, 7, 10 tons)	(4) 20x20x2	(2*) 20x25x2	(2*) 20x25x2	(4) 20x20
MPE-1 (12.5, 15 tons)	(4) 20x20x2	(2*) 20x25x2	(2*) 20x25x2	(2) 20x20 + (2) 20x24
MPE-2	(4) 25x25x2	(4**) 16x25x2	(4**) 16x25x2	(3) 16x20 + (3) 20x20
MPE-4	(12) 16x20x2	(4) 20x24x2 + (4) 24x24x2	(8) 20x24	(8) 16x24 + (4) 20x24
MPC-1	(4) 20x20x2	(3) 16x25x2	(3) 16x25x2	(2) 20x20 + (2) 20x24
MPC-2	(6) 16x20x2	(4) 16x25x2	(4) 16x25x2	((3) 16x20 + (3) 20x20

* Based upon a 30 / 36 in. energy wheel (16x25x2, quantity of 3 for 41 in. energy wheel)
** Based upon a 52 in. energy wheel (16x16x2, quantity of 8 for 58 in. energy wheel)

© 2024 Mitsubishi Electric US, Inc.

Optional Polymer Energy Wheel

Start-Up

If selected, the energy wheel is installed in the unit with one half of the wheel in the outdoor airstream and one half in the exhaust airstream. The energy wheel includes air seals to minimize leakage between airstreams.

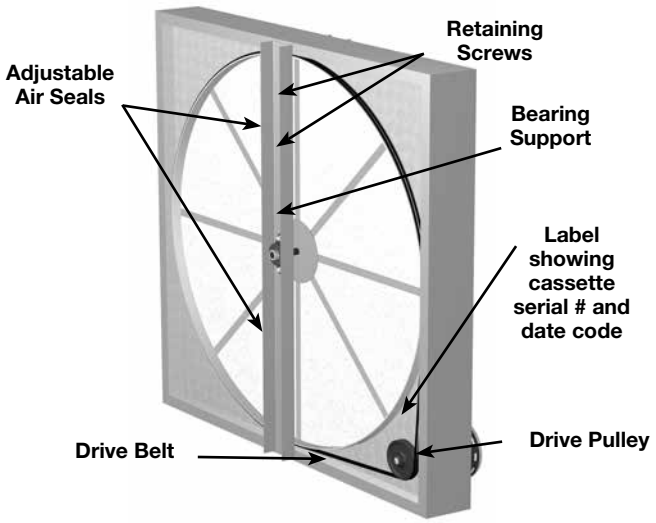

Drive Belt

Inspect the drive belt. Make sure the belt rides smoothly in the pulley and around the outside of the wheel. Note the directional arrow and data information shown in the image.

Adjust the Air Seals (Polymer wheels only)

The information below only applies to polymer wheels, which require air seal adjustment at the time of start-up for proper performance. Aluminum wheel air seals are factory-set and do not require field adjustment.

Make sure the unit power supply is locked out. Disconnect the wiring to the wheel module and pull the wheel cassette out of the cabinet on its tracks. Large cassettes are not removable. Then slowly rotate the wheel by hand to make sure there is no binding or misalignment.

There is a perimeter seal located around the outside of the wheel and a diameter seal across the face of the wheel on both sides. Check to make sure that all air seals are secure and in good condition.

Adjust the air seals by loosening all the air seal retaining screws on the bearing support. Using a piece of paper as a feeler gauge, adjust the seals so they almost touch the face of the wheel while tugging slightly on the paper. When the wheel is rotated, there should be a slight tug on the paper. Tighten the screws, repeat the steps on the other set of seals.

Push the wheel cassette back into the unit and plug in the power connector. Turn the main power supply back on and then observe the operation of the wheel by opening the wheel access door slightly. Remove filters if necessary to observe the wheel.

Sequence of Operation

Optional Economizer - The economizer will be locked out when: the outside air is below economizer lockout; the unit is operating in dehumidification mode; or there is a call for heating.

- **Stop Wheel:** When economizer mode is enabled and there is a signal for cooling, the wheel will stop rotating to allow free cooling.
- **Modulate Wheel:** When economizer mode is enabled and there is a signal for cooling, the wheel VFD modulates wheel speed to maintain the discharge temperature set point.

Optional Frost Control

The microprocessor controller will output a signal when wheel frosting is occurring which is determined by a temperature set point and wheel pressure drop increase.

- **Preheat:** When frosting is occurring, the preheater is energized to defrost the wheel. Once the pressure drop decreases below the set point, the preheater is de-energized.
- **Timed Exhaust:** When frosting is occurring, the supply blower is cycled off. The exhaust blower shall continue to run, allowing the warm exhaust air to defrost the wheel. After the 5 minute cycle, the supply fan is re-energized to continue normal operation.
- **Modulating Wheel:** When frosting is occurring, the wheel VFD will reduce wheel speed to prevent condensation and frosting. If the outdoor air temperature is greater than the frost threshold temperature OR the pressure differential is less than the set point, the wheel will run at full speed. If the outdoor air temperature is less than the frost threshold temperature AND the pressure differential is greater than the set point, the wheel will run at reduced speed until the pressure differential falls below the set point. The temperature and pressure differential set points are set at the factory, but are field-adjustable. The VFD will be fully programmed at the factory.

© 2024 Mitsubishi Electric US, Inc.

Optional Polymer Energy Wheel

Maintenance

⚠ WARNING

Whenever performing maintenance or inspections, always disconnect the power source.

Inspection

The wheel should be inspected semiannually in accordance with the maintenance schedule. Maintenance of the wheel consists mainly of inspecting the wheel for cleanliness and then checking the drive motor, belt, and pulley for wear. If the wheel appears dirty, the wheel should be disassembled and cleaned.

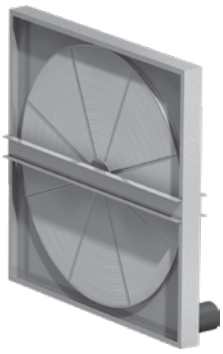

Energy Wheel Cassette

The wheel rotates through two airstreams moving in opposite directions, which means the wheel is self-cleaning, up to a point. If the wheel media becomes blocked by dirt or dust, or if the media collects a layer of smoke residue or an oily film, the energy transfer efficiency drops.

The main factor in the frequency of cleaning is the cleanliness of the air. If air filters are not changed frequently, the wheel will collect contaminants and will then have to be cleaned.

Wheel Disassembly

Wheels are part of a cassette that may be pulled from the unit for easy access. There may be a small damper assembly or other component that blocks removal of the cassette. Before sliding out the cassette or any other component, disconnect any power supply cord and secure it so it cannot jam or otherwise get damaged.

Each wheel has removable segments that hold the coated layers of media and each segment is held in place with two retaining clips located on the outer rim of the wheel. When removing more than one segment, remove them in sequence from opposite sides of the wheel (180 degrees apart) to reduce the imbalance. Secure the wheel against rotation. Carefully release the two retaining clips and swing them fully open. The segment can now be removed by pushing the face of the segment close to the outer rim of the wheel. Wheel segments are built to close tolerances and the segment may have to be jiggled to remove it. Do not use a hammer or otherwise force the segment because these are high value items and are not built to withstand abuse.

Segment Retaining Clip

Whenever retaining clips are opened, they should be closed as soon as possible. If the wheel should rotate when a clip is open, the clip will jam against the bearing support bar and could cause damage.

Cleaning

Maintenance or cleaning of the wheel segments should be done with the segments removed from the wheel cassette to avoid splashing liquids or cleaning agents inside the cabinet. If the energy wheel appears excessively dirty, it should be cleaned to ensure maximum operating efficiency. Only excessive buildup of foreign materials needs to be removed. **DISCOLORATION AND STAINING OF ENERGY RECOVERY WHEEL DOES NOT AFFECT ITS PERFORMANCE.**

Thoroughly spray the wheel matrix with a household cleaner such as Fantastik™ or the equivalent. Gently rinse with warm water and use a soft brush to remove any heavy accumulations. A detergent/water solution can also be used. Avoid aggressive organic solvents, such as acetone. Wheel segments can be soaked in the above solution overnight for removal of stubborn dirt or accumulations.

After cleaning is complete, shake excess water from the wheel or segments. Dry the wheel or segments before putting them back into the cassette.

Reassembly

When reinstalling the segments, be sure to install them with the correct face toward the motor side of the cassette. Note that one face of each segment is smooth and the other face has a reinforcing channel or support cut into the surface.

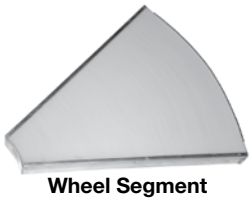

Wheel Segment (Pulley Side)

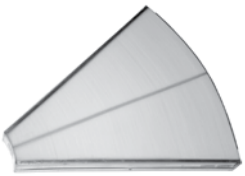

Wheel Segment (Motor Side)

Wheel Belt

Inspect belts each time filters are replaced. Belts that look chewed up or are leaving belt dust near the motor pulley may indicate a problem with the wheel. Be sure to inspect wheel for smooth and unrestricted rotation. If a belt requires replacement, contact the local manufacturer representative. Instructions for replacement will ship with the new belt.

Wheel Bearing

In the unlikely event that a wheel bearing fails, the bearing is behind a removable plate on the wheel support beam (slide cassette halfway out of cabinet to access). Contact the local manufacturer's representative for detailed instructions on how to replace the bearing.

© 2024 Mitsubishi Electric US, Inc.

Optional Aluminum Energy Wheel

Sequence of Operation

Optional Economizer

The economizer will be locked out when: the outside air is below economizer lockout; the unit is operating in dehumidification mode; or there is a call for heating.

- **Modulate Wheel:** When economizer mode is enabled and there is a signal for cooling, the wheel VFD modulates wheel speed to maintain the discharge temperature set point.

Optional Frost Control

The microprocessor controller will output a signal when wheel frosting is occurring which is determined by a temperature set point.

- **Modulating Wheel:** When frosting is occurring, the wheel VFD will modulate the wheel speed to maintain an exhaust air temperature set point. The VFD will be fully programmed at the factory.
- **Modulating Wheel with Electric Preheat:** When frosting is occurring, the wheel VFD will modulate the wheel speed to maintain a set point exhaust air temperature set point. The electric preheater will energize when the outdoor air temperature is below set point. The VFD will be fully programmed at the factory.

Maintenance

⚠ WARNING

Whenever performing maintenance or inspections, always disconnect the power source.

Inspection

The wheel should be inspected in accordance with the maintenance schedule. Maintenance of the wheel consists mainly of inspecting the wheel for cleanliness and then checking the drive motor, belt, and pulley for wear. If the wheel appears dirty, the wheel should be cleaned.

The wheel rotates through two airstreams moving in opposite directions, which means the wheel is self-cleaning up to a point. If the wheel media collects a layer of smoke residue or an oil film, the energy transfer efficiency drops.

The main factor in the frequency of cleaning is the cleanliness of the air. If air filters are not changed frequently, the wheel will collect contaminants and will then have to be cleaned.

Cleaning

Accumulation of dust or particles on the surface of the wheel can typically be vacuumed, purged with compressed air, or wiped from the surface. In cases when a more thorough cleaning is required, use the following procedure.

Liberally spray 409 cleaner onto a small section of the dirty side of the energy wheel, letting it foam to soften debris and residue. Blow approximately 90 psi of compressed air and from the opposite side of the wheel, catching the blown-off material on pre-placed drop cloths. Lightly sweep a soft sash paint brush across the face of the wheel to remove any leftover residue. A SLIGHT CLEANER SMELL MAY BE PRESENT FOR A SHORT TIME AFTER THE UNIT IS TURNED BACK ON. THIS SMELL WILL DISSIPATE QUICKLY.

Wheel Belt

Inspect belts each time filters are replaced. Belts that look chewed up or are leaving belt dust near the motor pulley may indicate a problem with the wheel. Be sure to inspect wheel for smooth and unrestricted rotation. If a belt requires replacement, contact the local manufacturer representative. Instructions for replacement will ship with the new belt.

Wheel Bearing

In the unlikely event that a wheel bearing fails, contact the local manufacturer's representative for detailed instructions.

© 2024 Mitsubishi Electric US, Inc.

⚠ WARNING

Energy core shall not be subjected to temperatures greater than 140°F. MPC-1 and MPC-2 models shall not be subjected to temperatures less than -40°F; and MPC-5-1 models shall not be subjected to temperatures less than -20°F. This will result in a damaged core and will not be covered by warranty.

⚠ WARNING

Running a single fan location when there is a high moisture content in the air moving through an energy core may result in damage to the fiber energy core. While this scenario (example: supply fan on, exhaust fan off) would not happen during normal operation with our microprocessor controls, it is advised against manually overriding a unit to run in this manner. Any damage resulting from this condition will not be covered by warranty.

Sequence of Operation

Optional Economizer

The economizer will be locked out when: the outside air is below economizer lockout; the unit is operating in dehumidification mode; or there is a call for heating.

- **Energy Core Bypass:** When economizer mode is enabled and there is a signal for cooling, the energy core bypass damper opens to bypass outdoor air around the core.

Optional Frost Control

The microprocessor controller will output a signal when core frosting is occurring.

- **Energy Core Bypass:** When the exhaust air temperature is below 30°F, the bypass damper modulates to maintain a 30°F exhaust air temperature set point. This sequence is included whenever a bypass damper is selected and functions independently of the additional frost control sequences listed below.
- **Timed Exhaust:** "When the exhaust air temperature is below set point, the supply fan turns off while the exhaust fan remains on.
- **Preheat:** When the outdoor air temperature is below set point, the electric preheater energizes.

Maintenance

⚠ WARNING

Whenever performing maintenance or inspections, always disconnect the power source.

Inspection

A regular cleaning cycle must be established for the energy core to maintain optimum performance. In reasonably clean environments such as schools, offices or retail stores, the energy core should be inspected annually and cleaned as needed. Failure to follow a regular cleaning cycle for the energy core can result in significant energy transfer performance losses.

Cleaning

Energy cores do not require removal to be cleaned.

Washing Fiber Membrane Core

Fiber Membrane Core

Gently vacuum the surfaces of the energy core to remove the dirt and debris that has accumulated.

⚠ WARNING

Do not wash, soak in water, or use detergents and/or cleaners on the fiber membrane core. This will result in a damaged core and will not be covered by the warranty.

Polymer Membrane Core

Washing Polymer Membrane Core

Use low pressure tap water to clean the energy core. A drain pan is installed underneath the core to collect waste water. Remove the factory-installed drain caps prior to cleaning. If the core is extremely dirty, use a mild detergent such as Dawn® in a solution no less than 1:100 parts soap to water, and then rinse with tap water until no more bubbles appear.

⚠ WARNING

Do not use a high pressure water source (pressure washer) or harsh, corrosive detergents. This will result in a damaged core and will not be covered by the warranty.

© 2024 Mitsubishi Electric US, Inc.

Reference - Venting Connection Locations

MP-1

200-300MBH

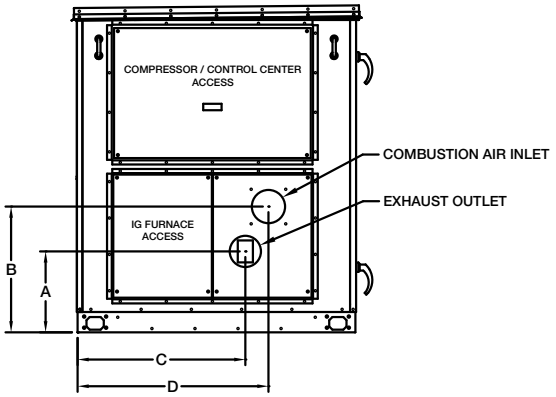

100-150MBH

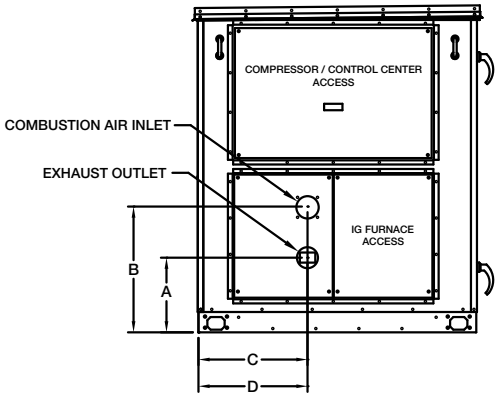

MPE-2

500MBH

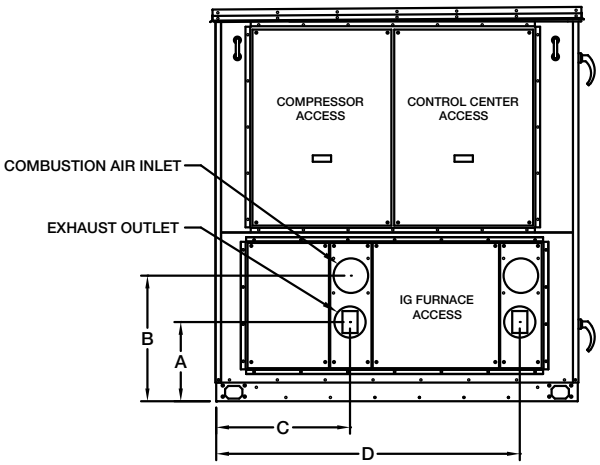

300-400MBH

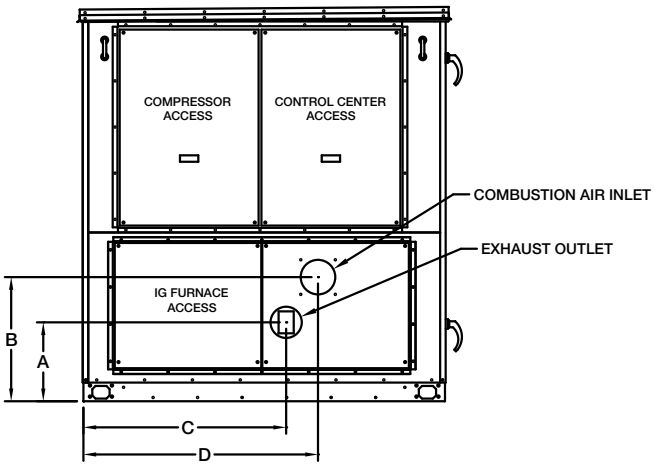

IG Venting Location								
Housing Size	Furnace Size (MBH)	A	B	C	D	Flue Connection Size (diameter in inches)		
						Standard	2-Pipe/Concentric	
						Exhaust	Exhaust	Intake
1	100	14	23.5	20.5	20.5	4	4	4
	200	15.2	23.7	31.5	35.9	6	6	6
	300					6	6	6
2	300	14.8	23.3	38.1	44.1	6	6	6
	400					6	6	6
	500	14.9	23.6	25.2	57.1	6	6	6

© 2024 Mitsubishi Electric US, Inc.

Reference - Rated Airflow

Packaged Direct Expansion			
Model	Airflow (SCFM)	Model	Airflow (SCFM)
MP-0-3	1,100	MP-2-17.5	3,800
MP-0-4	1,450	MP-2-20	4,600
MP-0-5	1,700	MP-2-25	4,800
MP-0-6	1,600	MP-2-30	5,200
MP-0-7	1,700	MP-4-25	8,300
MP-1-5	1,900	MP-4-30	9,400
MP-1-7	1,900	MP-4-40	10,000
MP-1-10	2,600	MP-4-50	10,800
MP-1-12.5	2,300	MP-4-60	11,000
MP-1-15	3,100	MP-4-70	11,500
MP-2-15	3,800		

Air-Source Heat Pump	
Model	Airflow (SCFM)
MP-1-5	2,600
MP-1-7	2,700
MP-1-10	3,700
MP-1-12.5	4,300
MP-1-15	3,900
MP-2-15	4,300
MP-2-17.5	4,400
MP-2-20	6,300
MP-2-25	7,200
MP-2-30	7,100

Full load rating airflow per AHRI 210/240 or AHRI 340/360
PDX configured with ECM condenser fan and indirect gas heat
ASHP configured with ECM condenser fan and electric heat

© 2024 Mitsubishi Electric US, Inc.

Maintenance Log

Date _____ Time _____ AM/PM
Notes: _____

Date _____ Time _____ AM/PM
Notes: _____

Date _____ Time _____ AM/PM
Notes: _____

Date _____ Time _____ AM/PM
Notes: _____

Date _____ Time _____ AM/PM
Notes: _____

Date _____ Time _____ AM/PM
Notes: _____

Date _____ Time _____ AM/PM
Notes: _____

Date _____ Time _____ AM/PM
Notes: _____

Date _____ Time _____ AM/PM
Notes: _____

Date _____ Time _____ AM/PM
Notes: _____

Date _____ Time _____ AM/PM
Notes: _____

Date _____ Time _____ AM/PM
Notes: _____

© 2024 Mitsubishi Electric US, Inc.

Maintenance Log

Date _____ Time _____ AM/PM
Notes: _____

Date _____ Time _____ AM/PM
Notes: _____

Date _____ Time _____ AM/PM
Notes: _____

Date _____ Time _____ AM/PM
Notes: _____

Date _____ Time _____ AM/PM
Notes: _____

Date _____ Time _____ AM/PM
Notes: _____

Date _____ Time _____ AM/PM
Notes: _____

Date _____ Time _____ AM/PM
Notes: _____

© 2024 Mitsubishi Electric US, Inc.
PremiSys® is a registered trademark of Greenheck Fan Corporation. Used with permission.