Air-Conditioners

SERVICE MANUAL

Model name
<Indoor unit>

TPVFYP008, 012, 018, 024, 030, 036, 048, 054AM141*

Multi-Position Air Handler

Contents

1 SAFETY PRECAUTION 2
2 FEATURES 5
3 PART NAMES AND FUNCTIONS 6
4 SPECIFICATION 9
5 OUTLINES & DIMENSIONS 13
6 WIRING DIAGRAM 15
7 REFRIGERANT SYSTEM DIAGRAM 16
8 MICROPROCESSOR CONTROL 17
9 TROUBLESHOOTING 29
10 DISASSEMBLY PROCEDURE 39

1 SAFETY PRECAUTION

Read before installation and performing electrical work

- Thoroughly read the following safety precautions prior to installation.
- Observe these safety precautions for your safety.
- This equipment may have adverse effects on the equipment on the same power supply system.
- Contact the local power authority before connecting to the system.

Symbol explanations

WARNING
This symbol indicates that failure to follow the instructions exactly as stated poses the risk of serious injury or death.

CAUTION
This symbol indicates that failure to follow the instructions exactly as stated poses the risk of serious injury or damage to the unit.

Indicates an action that must be avoided.

Indicates important instructions.

Indicates a parts that requires grounding.

Indicates that caution must be taken with rotating parts. (This symbol is on the main unit label.) <Color: Yellow>

Indicates that the parts that are marked with this symbol pose a risk of electric shock. (This symbol is on the main unit label.) <Color: Yellow>

WARNING
Carefully read the labels affixed to the main unit.

WARNING

Do not use refrigerant other than the type indicated in the manuals provided with the unit and on the nameplate.
Doing so may cause the unit or pipes to burst, or result in explosion or fire during use, during repair, or at the time of disposal of the unit. It may also be in violation of applicable laws. MITSUBISHI ELECTRIC CORPORATION cannot be held responsible for malfunctions or accidents resulting from the use of the wrong type of refrigerant.

Ask your dealer or a qualified technician to install the unit.
Improper installation by the user may result in water leakage, electric shock, or fire.

Properly install the unit on a surface that can withstand its weight.
Unit installed on an unstable surface may fall and cause injury.

Only use specified cables. Securely connect each cable so that the terminals do not carry the weight of the cable.
Improperly connected cables may produce heat and start a fire.

Take appropriate safety measures against wind gusts and earthquakes to prevent the unit from toppling over.
Improper installation may cause the unit to topple over and cause injury or damage to the unit.

Only use accessories (i.e., air cleaners, humidifiers, electric heaters) recommended by Mitsubishi Electric.

Do not make any modifications or alterations to the unit. Consult your dealer for repair.
Improper repair may result in water leakage, electric shock, or fire.

Do not touch the heat exchanger fins with bare hands.
The fins are sharp and pose a risk of cuts.

In the event of a refrigerant leak, thoroughly ventilate the room.
If gaseous refrigerant leaks out and comes in contact with an open flame, toxic gases will be generated.

Properly install the unit according to the instructions in the Installation Manual.
Improper installation may result in water leakage, electric shock, or fire.

© 2021 Mitsubishi Electric US, Inc.

⚠ WARNING

Have all electrical work performed by an authorized electrician according to the local regulations and the instructions in this manual. Use a dedicated circuit.
Insufficient power supply capacity or improper installation of the unit may result in malfunctions of the unit, electric shock, or fire.

Keep electrical parts away from water.
Wet electrical parts pose a risk of electric shock, smoke, or fire.

Securely attach the control box cover.
If the cover is not installed properly, dust or water may infiltrate and pose a risk of electric shock, smoke, or fire.

Only use the type of refrigerant that is indicated on the unit when installing or relocating the unit.
Infiltration of any other types of refrigerant or air into the unit may adversely affect the refrigerant cycle and may cause the pipes to burst or explode.

When installing the unit in a small space, take appropriate precautions to prevent leaked refrigerant from reaching the limiting concentration.
Leaked refrigerant gas will displace oxygen and may cause oxygen starvation. Consult your dealer before installing the unit.

Consult your dealer or a qualified technician when moving or reinstalling the unit.
Improper installation may result in water leakage, electric shock, or fire.

After completing the service work, check for a refrigerant leak.
If leaked refrigerant is exposed to a heat source, such as a fan heater, stove, or electric grill, toxic gases will be generated.

Do not try to defeat the safety features of the unit.
Forced operation of the pressure switch or the temperature switch by defeating the safety features for these devices, or the use of accessories other than the ones that are recommended by Mitsubishi Electric may result in smoke, fire, or explosion.

Consult your dealer for proper disposal method.

Do not use a leak detection additive.

© 2021 Mitsubishi Electric US, Inc.

Precautions for handling units for use with R410A

⚠ CAUTION

Do not use the existing refrigerant piping.
A large amount of chlorine that may be contained in the residual refrigerant and refrigerator oil in the existing piping may cause the refrigerator oil in the new unit to deteriorate.

Use refrigerant piping materials made of phosphorus deoxidized copper. Keep the inner and outer surfaces of the pipes clean and free of such contaminants as sulfur, oxides, dust, dirt, shaving particles, oil, and moisture.
Contaminants in the refrigerant piping may cause the refrigerator oil to deteriorate.

Store the piping materials indoors, and keep both ends of the pipes sealed until immediately before brazing. (Keep elbows and other joints wrapped in plastic.)
Infiltration of dust, dirt, or water into the refrigerant system may cause the refrigerator oil to deteriorate or cause the compressor to malfunction.

Use a small amount of ester oil, ether oil, or alkyl benzene to coat flares and flanges.
Infiltration of a large amount of mineral oil may cause the refrigerator oil to deteriorate.

Charge the system with refrigerant in the liquid phase.
If gaseous refrigerant is drawn out of the cylinder first, the composition of the remaining refrigerant in the cylinder will change and become unsuitable for use.

Only use R410A.
The use of other types of refrigerant that contain chloride may cause the refrigerator oil to deteriorate.

Use a vacuum pump with a check valve.
If a vacuum pump that is not equipped with a check valve is used, the vacuum pump oil may flow into the refrigerant cycle and cause the refrigerator oil to deteriorate.

Prepare tools for exclusive use with R 410A. Do not use the following tools if they have been used with the conventional refrigerant: gauge manifold, charging hose, gas leak detector, check valve, refrigerant charge base, vacuum gauge, and refrigerant recovery equipment.
If the refrigerant or the refrigerator oil that may be left on these tools are mixed in with R410A, it may cause the refrigerator oil in the new system to deteriorate. Infiltration of water may cause the refrigerator oil to deteriorate. Leak detectors for conventional refrigerants will not detect an R410A leak because R410A is free of chlorine.

Do not use a charging cylinder.
If a charging cylinder is used, the composition of the refrigerant in the cylinder will change and become unsuitable for use.

Exercise special care when handling tools for use with R410A.
Infiltration of dust, dirt, or water into the refrigerant system may cause the refrigerator oil to deteriorate.

© 2021 Mitsubishi Electric US, Inc.

2 FEATURES

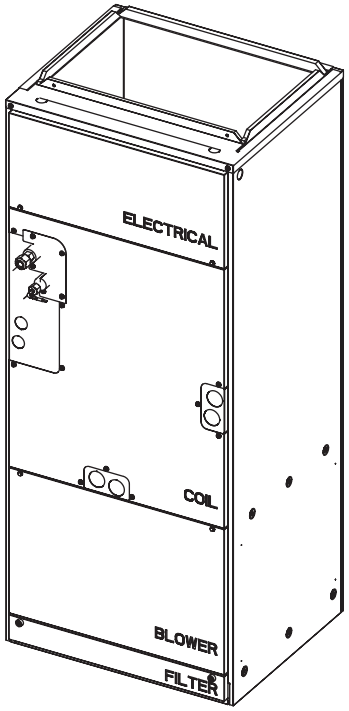

Model	Cooling capacity/Heating capacity	
	Btu/h	kW
TPVFYP008AM141*	8000/9000	2.3/2.6
TPVFYP012AM141*	12000/13500	3.5/4.0
TPVFYP018AM141*	18000/20000	5.3/5.9
TPVFYP024AM141*	24000/27000	7.0/7.9
TPVFYP030AM141*	30000/34000	8.8/10.0
TPVFYP036AM141*	36000/40000	10.6/11.7
TPVFYP048AM141*	48000/54000	14.1/15.8
TPVFY0P54AM141*	54000/60000	15.8/17.6

© 2021 Mitsubishi Electric US, Inc.

3 PART NAMES AND FUNCTIONS

1. Indoor Unit

(1)Vertical

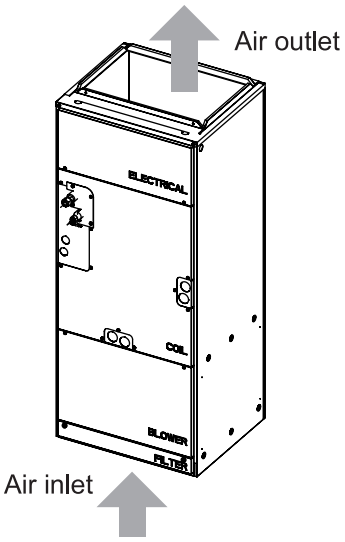

(2)Horizontal Right

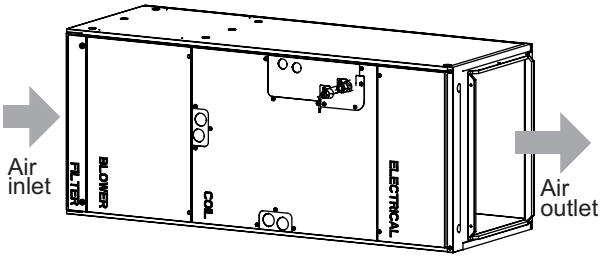

(3)Horizontal left

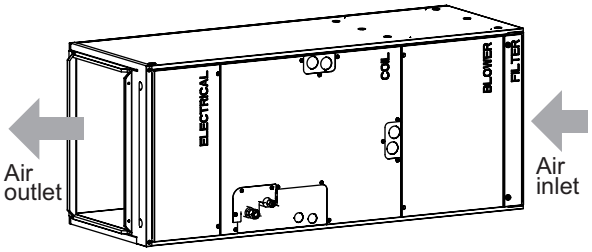

(4)Down flow

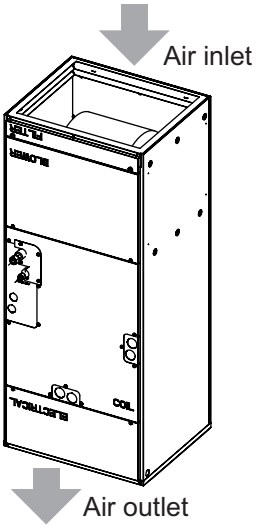

Specifications are subject to change without notice.

© 2021 Mitsubishi Electric US, Inc.

1. Remote Controller

[PAC-YT53CRAU]
Once the operation mode is selected, the unit will remain in the selected mode until changed.

(1) Remote Controller Buttons

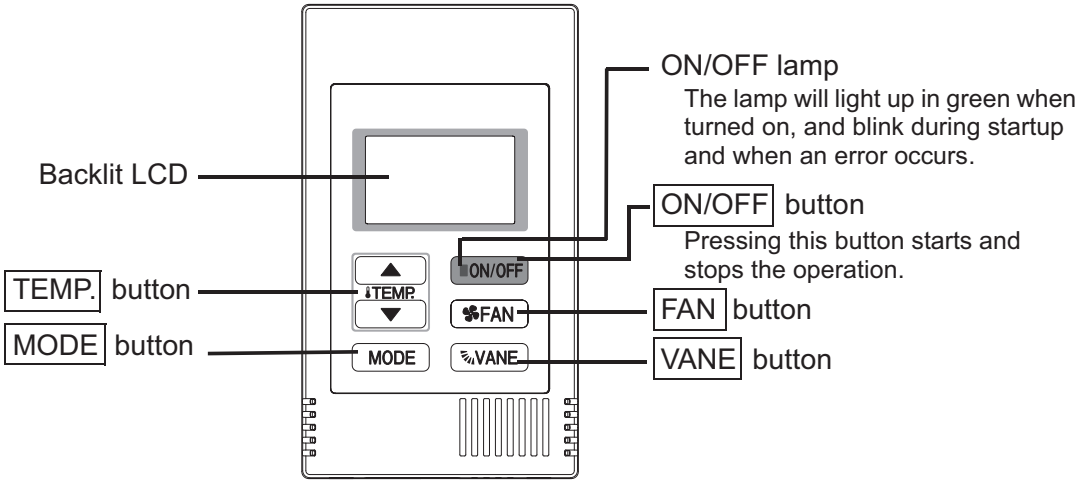

- Keep the remote controller out of direct sunlight to ensure accurate measurement of room temperature.
- The thermistor at the lower right-hand section of the remote controller must be free from obstructions to ensure accurate measurement of room temperature.
- To set the functions that are not available on this controller (PAC-YT53CRAU), use ME remote controller or the maintenance tool software.

Specifications are subject to change without notice.
© 2021 Mitsubishi Electric US, Inc.

(2) Remote Controller Display

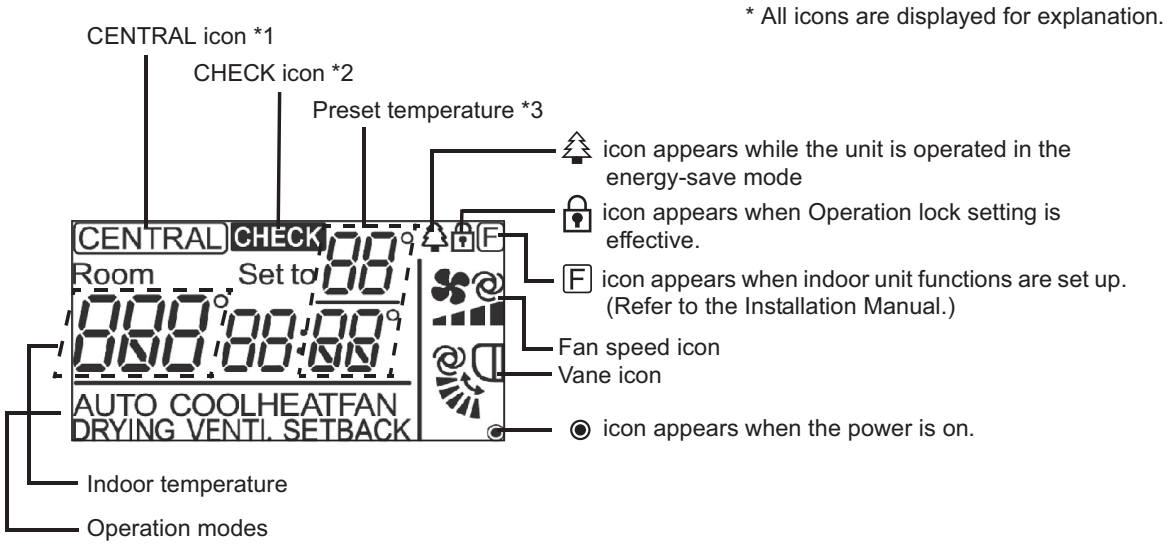

*1 CENTRAL icon

Appears when one of the following local operations is prohibited: ON/OFF; operation mode; preset temperature; fan speed; vane.

*2 CHECK icon

For M-Series and P-Series, when an error occurs, power indicator will blink, and refrigerant address (two digits), error code (two digits), and unit No. will blink.
For City Multi, when an error occurs, power indicator will blink, and unit address (three digits) and error code (four digits) will blink.
Check the error status, stop the operation, and consult your dealer.

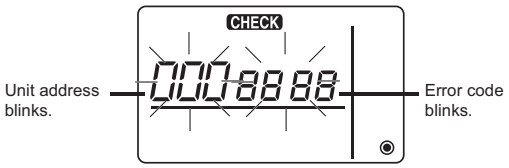

When only error code blinks, air conditioning units stay in operation, but an error may have occurred.
Check the error code, and consult your dealer.

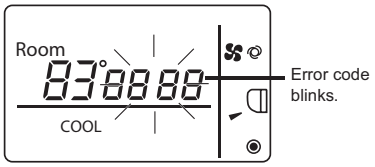

*3 Preset temperature

* Centigrade or Fahrenheit is selectable. Refer to the Installation Manual for details.

In COOL, DRYING, HEAT, or AUTO (single set point) modes

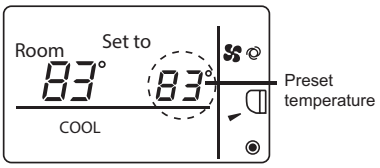

In AUTO (dual set point) or SETBACK modes

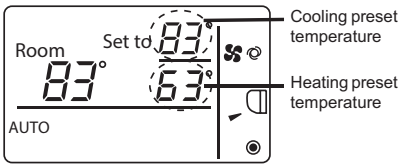

Specifications are subject to change without notice.
© 2021 Mitsubishi Electric US, Inc.

4 SPECIFICATION

1. Specifications

Model				TPVFY008AM141*	TPVFYP012AM141*	TPVFYP018AM141*	TPVFYP024AM141*
Power source				1-phase 208/230V 60Hz			
Cooling capacity (Nominal)		*1	Btu / h	8,000	12,000	18,000	24,000
		*1	kW	2.3	3.5	5.3	7.0
	Power input		kW	0.08		0.13	0.18
	Current input		A	0.80/0.70		1.20/1.10	1.60/1.40
Heating capacity (Nominal)		*2	Btu / h	9,000	13,500	20,000	27,000
		*2	kW	2.6	4.0	5.9	7.9
	Power input		kW	0.08		0.13	0.18
	Current input		A	0.80/0.70		1.20/1.10	1.60/1.40
External finish				Galvanized steel cabinet -Powder coated slate gray			
External dimension H x W x D			In.	50-1/4x17x21-5/8			
			mm	1275 x 432 x 548			
Net weight			Lbs. (kg)	113 (51)			
Heat exchanger				Cross fin (Aluminium fin and copper tube)			
FAN	Type x Quantity			Sirocco fan x 1			
	External static press.		In.WG	<0.30>-0.50-<0.80>			
			Pa	<75>-125-<200>			
	Motor type			DC motor			
	Motor output		kW	0.121			
	Driving mechanism			Direct-driven by motor			
	Airflow rate (Low-Mid-High)		CFM	280-340-400		410-497-585	515-625-735
			m³ / min	7.9-9.6-11.3		11.6-14.1-16.6	14.6-17.7-20.8
			L / s	132-160-188		193-235-277	243-295-347
Sound pressure level (Low-Mid-High) (measured in anechoic room)			dB <A>	27-31-35		28-32-36	30-34-38
Insulation material				EPS, Polyethylene foam, Urethane foam, Polyester			
Air filter				PP honeycomb fabric			
Protection device				Fuse			
Refrigerant control device				LEV			
Connectable outdoor unit				R410A CITY MULTI			
Diameter of refrigerant pipe (O.D.)	Liquid (R410A)		In. (mm)	1/4 (6.35) Brazed	1/4 (6.35) Brazed	1/4 (6.35) Brazed	3/8 (9.52) Brazed
	Gas (R410A)		In. (mm)	1/2 (12.7) Brazed	1/2 (12.7) Brazed	1/2 (12.7) Brazed	5/8 (15.88) Brazed
Diameter of drain pipe			In. (mm)	3/4 (19.05) FPT			
Drawing	External			PA94C593			
	Wiring			PA94C598			
	Refrigerant cycle			-			
Standard attachment	Document			Installation Manual, Instruction Book			
	Accessory			Tie band, Plastic tube, Drain pan seal			
Optional parts	External heater adapter			CN24RELAY-KIT-CM3			

Specifications are subject to change without notice.

© 2021 Mitsubishi Electric US, Inc.

Model			TPVFYP030AM141*	TVFYP036AM141*
Power source			1-phase 208/230V 60Hz	
Cooling capacity (Nominal)	*1	Btu / h	30,000	36,000
	*1	kW	8.8	10.6
	Power input	kW	0.21	0.34
	Current input	A	2.00/1.70	3.00/2.70
Heating capacity	*2	Btu / h	34,000	40,000
(Nominal)	*2	kW	10.0	11.7
	Power input	kW	0.21	0.34
	Current input	A	2.00/1.70	3.00/2.70
External finish			Galvanized steel cabinet -Powder coated slate gray	
External dimension H x W x D		In.	54-1/4x21x21-5/8	
		mm	1378 x 534 x 548	
Net weight		Lbs. (kg)	141 (64)	
Heat exchanger			Cross fin (Aluminium fin and copper tube)	
FAN	Type x Quantity		Sirocco fan x 1	
	External static press.	in.WG	<0.30>-0.50-<0.80>	
		Pa	<75>-125-<200>	
	Motor type		DC motor	
	Motor output	kW	0.244	
	Driving mechanism		Direct-driven by motor	
	Airflow rate (Low-Mid-High)	CFM	613-744-875	767-931-1095
		m³ / min	17.3-21.1-24.8	21.7-26.4-31.0
		L / s	290-352-413	362-440-517
Sound pressure level (Low-Mid-High) (measured in anechoic room)		dB <A>	32-36-40	35-39-43
Insulation material			EPS, Polyethylene foam, Urethane foam, Polyester	
Air filter			PP honeycomb fabric	
Protection device			Fuse	
Refrigerant control device			LEV	
Connectable outdoor unit			R410A CITY MULTI	
Diameter of refrigerant pipe (O.D.)	Liquid (R410A)	In. (mm)	3/8 (9.52) Brazed	
	Gas (R410A)	In. (mm)	5/8 (15.88) Brazed	
Diameter of drain pipe		In. (mm)	3/4 (19.05) FPT	
Drawing	External		PA94C593	
	Wiring		PA94C598	
	Refrigerant cycle		-	
Standard attachment	Document		Installation Manual, Instruction Book	
	Accessory		Tie band, Plastic tube, Drain pan seal	
Optional parts	External heater adapter		CN24RELAY-KIT-CM3	
Remark	Installation		Details on foundation work, duct work, insulation work, electrical wiring, power source switch, and other items shall be referred to the Installation Manual. Due to continuing improvement, above specifications may be subject to change without notice.	

© 2021 Mitsubishi Electric US, Inc.

Model			TPVFYP048AM141*	TPVFYP054AM141*
Power source			1-phase 208/230V 60Hz	
Cooling capacity (Nominal)	*1	Btu / h	48,000	54,000
	*1	kW	14.1	15.8
	Power input	kW	0.42	0.48
	Current input	A	3.50/3.30	3.90/3.70
Heating capacity	*2	Btu / h	54,000	60,000
(Nominal)	*2	kW	15.8	17.6
	Power input	kW	0.42	0.48
	Current input	A	3.50/3.30	3.90/3.70
External finish			Galvanized steel cabinet -Powder coated slate gray	
External dimension H x W x D		In.	59-1/2x25x21-5/8	
		mm	1511 x 635 x 548	
Net weight		Lbs. (kg)	172 (78)	
Heat exchanger			Cross fin (Aluminium fin and copper tube)	
FAN	Type x Quantity		Sirocco fan x 1	
	External static press.	In.WG	<0.30>-0.50-<0.80>	
		Pa	<75>-125-<200>	
	Motor type		DC motor	
	Motor output	kW	0.430	
	Driving mechanism		Direct-driven by motor	
	Airflow rate (Low-Mid-High)	CFM	980-1190-1400	1040-1262-1485
		m³ / min	27.7-33.7-39.6	29.4-35.7-42.0
		L / s	463-562-660	492-595-702
Sound pressure level (Low-Mid-High) (measured in anechoic room)		dB <A>	35-39-43	36-40-44
Insulation material			EPS, Polyethylene foam, Urethane foam, Polyester	
Air filter			PP honeycomb fabric	
Protection device			Fuse	
Refrigerant control device			LEV	
Connectable outdoor unit			R410A CITY MULTI	
Diameter of refrigerant pipe (O.D.)	Liquid (R410A)	In. (mm)	3/8 (9.52) Brazed	
	Gas (R410A)	In. (mm)	5/8 (15.88) Brazed	
Diameter of drain pipe		In. (mm)	3/4 (19.05) FPT	
Drawing	External		PA94C593	
	Wiring		PA94C598	
	Refrigerant cycle		-	
Standard attachment	Document		Installation Manual, Instruction Book	
	Accessory		Tie band, Plastic tube, Drain pan seal	
Optional parts	External heater adapter		CN24RELAY-KIT-CM3	
Remark	Installation		Details on foundation work, duct work, insulation work, electrical wiring, power source switch, and other items shall be referred to the Installation Manual. Due to continuing improvement, above specifications may be subject to change without notice.	

Specifications are subject to change without notice.

© 2021 Mitsubishi Electric US, Inc.

Notes

Note :	*1 Nominal cooling conditions	*2 Nominal heating conditions	Unit convertor
Indoor :	80° F D.B. / 67° F W.B.	70° F D.B.	kcal/h = kW x 860
	(26.7° C D.B. / 19.4° C W.B.)	(21.1° C D.B.)	Btu/h = kW x 3,412
Outdoor :	95° F D.B.	47° F D.B. / 43° gF W.B.	cfm = m3/min x 35.31
	(35° C D.B.)	(8.3° C D.B. / 6.1° C W.B.)	lbs = kg / 0.4536
Pipe length :	25 ft. (7.6 m)	25 ft. (7.6 m)	*Above specification data is subject to rounding variation.
Level difference :	0 ft. (0 m)	0 ft. (0 m)	
*The external static pressure is set to 0.50in. WG(125Pa) at factory shipment.			
*Due to continuing improvement, above specification may be subject to change without notice.			

2. Electrical component specifications

Component	Symbol	TPVFYP008AM141*	TPVFYP012AM141*	TPVFYP018AM141*	TPVFYP024AM141*
Room temperature thermistor	TH21	Resistance 0°C/15kΩ, 10°C/9.6kΩ, 20°C/6.3kΩ, 25°C/5.4kΩ, 30°C/4.3kΩ, 40°C/3.0kΩ			
Liquid pipe thermistor	TH22	Resistance 0°C/15kΩ, 10°C/9.6kΩ, 20°C/6.3kΩ, 25°C/5.4kΩ, 30°C/4.3kΩ, 40°C/3.0kΩ			
Gas pipe thermistor	TH23	Resistance 0°C/15kΩ, 10°C/9.6kΩ, 20°C/6.3kΩ, 25°C/5.4kΩ, 30°C/4.3kΩ, 40°C/3.0kΩ			
Fuse	FUSE	250V 6.3A			
Fan motor		8-pole, Output 121W SIC-71FW-D8121-3			
Linear expansion valve	LEV	12VDC Stepping motor drive port diameter ø3.2 (0~2000 pulse)			
Power supply terminal block	TB2	(L1, L2, G) 250V 20A			
Transmission terminal block	TB5 TB15	(1, 2) 250V 15A, (M1, M2, S) 250V 20A			

Component	Symbol	TPVFYP030AM141*	TPVFYP036AM141*
Room temperature thermistor	TH21	Resistance 0°C/15kΩ, 10°C/9.6kΩ, 20°C/6.3kΩ, 25°C/5.4kΩ, 30°C/4.3kΩ, 40°C/3.0kΩ	
Liquid pipe thermistor	TH22	Resistance 0°C/15kΩ, 10°C/9.6kΩ, 20°C/6.3kΩ, 25°C/5.4kΩ, 30°C/4.3kΩ, 40°C/3.0kΩ	
Gas pipe thermistor	TH23	Resistance 0°C/15kΩ, 10°C/9.6kΩ, 20°C/6.3kΩ, 25°C/5.4kΩ, 30°C/4.3kΩ, 40°C/3.0kΩ	
Fuse	FUSE	250V 6.3A	
Fan motor		8-pole, Output 244W SIC-81FW-D8244-1	
Linear expansion valve	LEV	12VDC Stepping motor drive port diameter ø3.2 (0~2000 pulse)	
Power supply terminal block	TB2	(L1, L2, G) 250V 20A	
Transmission terminal block	TB5 TB15	(1, 2) 250V 15A, (M1, M2, S) 250V 20A	

Component	Symbol	TPVFYP048AM141*	TPVFYP054AM141*
Room temperature thermistor	TH21	Resistance 0°C/15kΩ, 10°C/9.6kΩ, 20°C/6.3kΩ, 25°C/5.4kΩ, 30°C/4.3kΩ, 40°C/3.0kΩ	
Liquid pipe thermistor	TH22	Resistance 0°C/15kΩ, 10°C/9.6kΩ, 20°C/6.3kΩ, 25°C/5.4kΩ, 30°C/4.3kΩ, 40°C/3.0kΩ	
Gas pipe thermistor	TH23	Resistance 0°C/15kΩ, 10°C/9.6kΩ, 20°C/6.3kΩ, 25°C/5.4kΩ, 30°C/4.3kΩ, 40°C/3.0kΩ	
Fuse	FUSE	250V 6.3A	
Fan motor		8-pole, Output 430W M-MW-430-A-1	
Linear expansion valve	LEV	12VDC Stepping motor drive port diameter ø3.2 (0~2000 pulse)	
Power supply terminal block	TB2	(L1, L2, G) 250V 20A	
Transmission terminal block	TB5 TB15	(1, 2) 250V 15A, (M1, M2, S) 250V 20A	

© 2021 Mitsubishi Electric US, Inc.

5 OUTLINES & DIMENSIONS

INDOOR UNIT

TPVFYP008, 012,018, 024, 030, 036, 048, 054AM141*

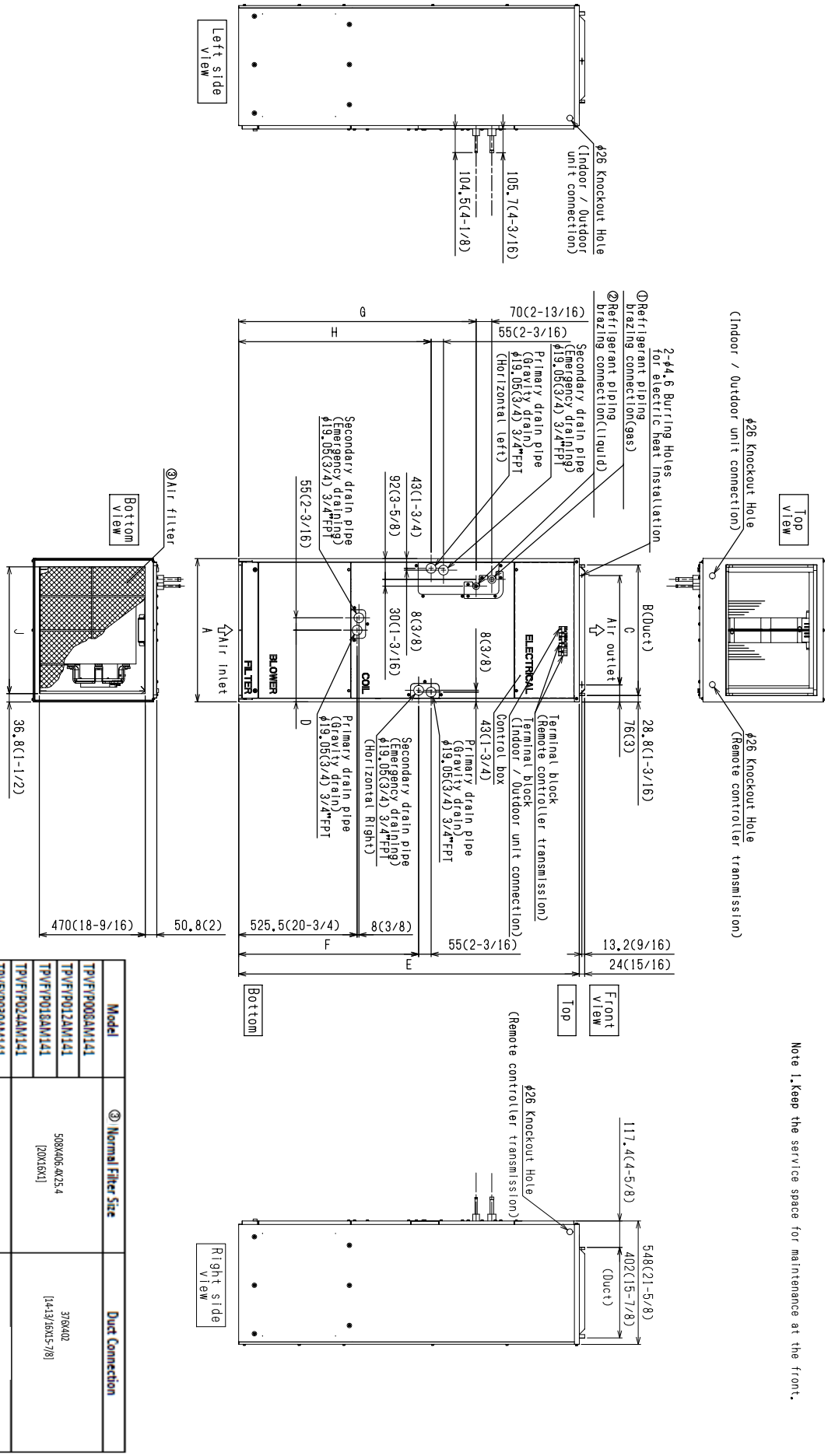

Model	A	B	C	D	E	F	G	H	J	① Gas Pipe	② Liquid Pipe
TPVFYP008AM141	432 (17)	376 (14-13/16)	281 (11-1/8)	224 (8-7/8)	1275 (50-1/4)	680 (26-13/16)	823 (32-7/16)	735.5 (29)	360 (14-3/16	φ12.7 (1/2)	φ6.35 (1/4)
TPVFYP012AM141											
TPVFYP018AM141											
TPVFYP024AM141											
TPVFYP030AM141	534 (21)	477 (18-13/16)	382.6 (15-1/8)	266.5 (10-1/2)	1378 (54-1/4)	737 (29-1/16)	953.5 (37-9/16)	792 (31-3/16)	(18-3/16)	φ15.88 (5/8)	φ9.52 (3/8)
TPVFYP036AM141											
TPVFYP048AM141	635 (25)	579 (22-13/16)	484.6 (19-1/8)	317.5 (12-1/2)	1511 (59-1/2)	798.5 (31-7/16)	1053 (41-1/2)	853.5 (33-5/8)	563 (22-3/16)		
TPVFYP054AM141											

Unit:mm(in.)

Model	③ Normal Filter Size	Duct Connection
TPVFYP008AM141	508X406.4X25.4 [20X16X1]	376X402 [14-13/16X15-7/8]
TPVFYP012AM141		
TPVFYP018AM141		
TPVFYP024AM141		
TPVFYP030AM141	508X508X25.4 [20X20X1]	508X609.6X25.4 [20X24X1]
TPVFYP036AM141		
TPVFYP048AM141	477X402 [18-13/16X15-7/8]	579X402 [22-13/16X15-7/8]
TPVFYP054AM141		

Specifications are subject to change without notice.

© 2021 Mitsubishi Electric US, Inc.

Unit : mm(in.)

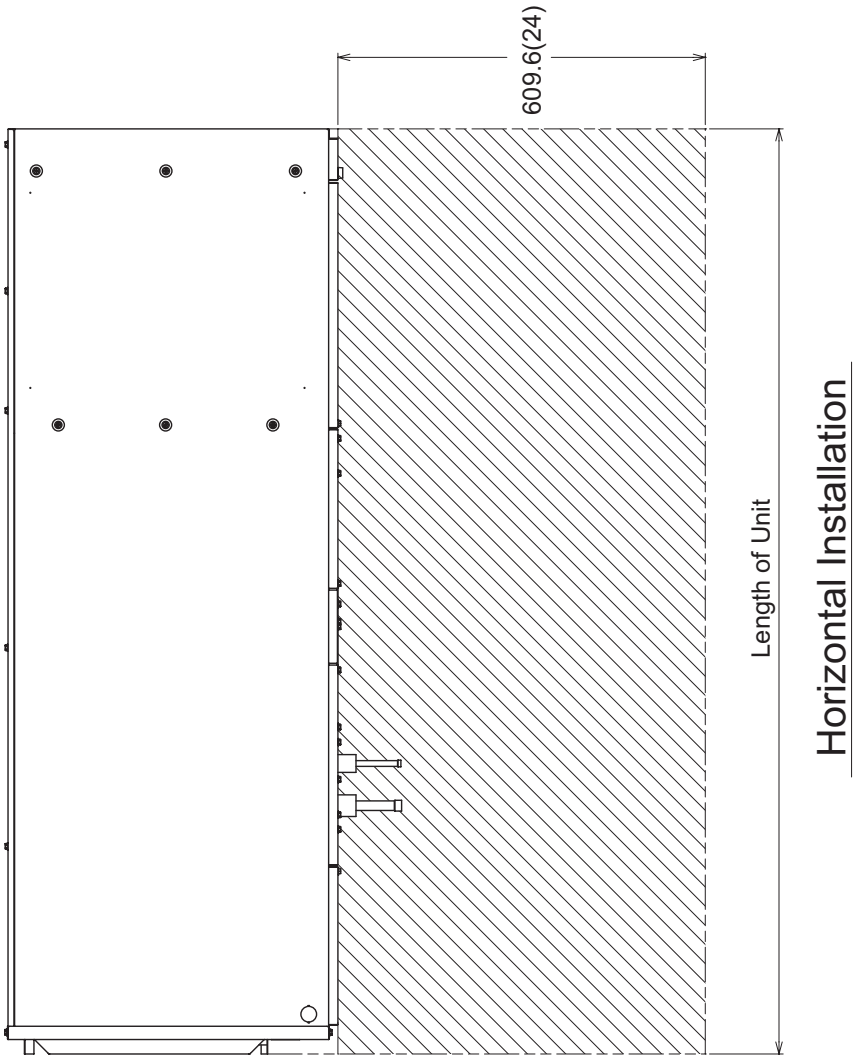

Horizontal Installation

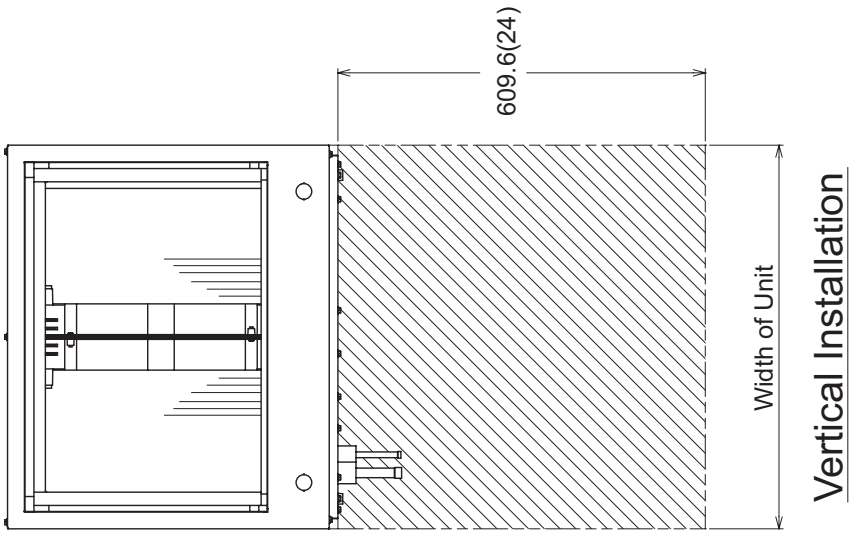

Vertical Installation

Clearance Area

Specifications are subject to change without notice.

© 2021 Mitsubishi Electric US, Inc.

6 WIRING DIAGRAM

TPVFYP008, 012, 018, 024, 030, 036, 048, 054AM141*

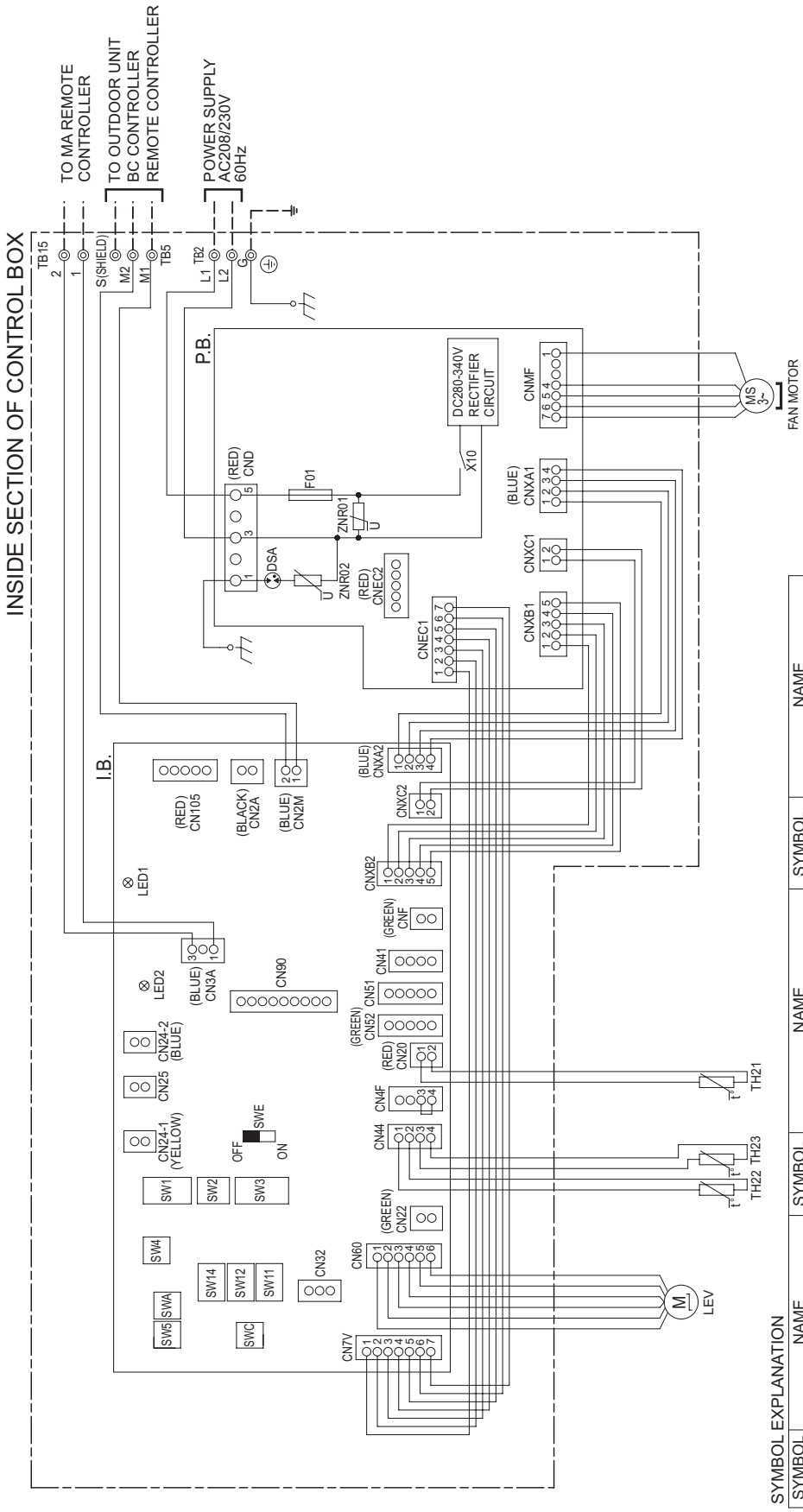

NOTE:1.Symbols used in wiring diagram above are,

○ ○ :Connector

◎ :Terminal

– – – (Heavy dotted line):Field wiring

2.Use copper supply wires.

SYMBOL EXPLANATION

SYMBOL	NAME	SYMBOL	NAME	SYMBOL	NAME
I.B.	Indoor controller board	CN32	Connector (Remote switch)	SW1(I.B.)	Switch (for mode selection)
P.B.	Power supply board	CN41	Connector (HA terminal-A)	SW2(I.B.)	Switch (for capacity code)
TB2	Power source terminal block	CN51	Connector (Centrally control)	SW3(I.B.)	Switch (for mode selection)
TB5	Transmission terminal block	CN52	Connector (Remote indication)	SW4(I.B.)	Switch (for model selection)
TB15	Transmission terminal block	CN90	Connector (Wireless)	SW5(I.B.)	Switch (for mode selection)
F01	Fuse AC250V 6.3A	CN105	Connector (IT terminal)	SW11(I.B.)	Switch (1st digit address set)
ZNR01,02	Varistor	CN2A	Connector (0-10V Analog input)	SW12(I.B.)	Switch (10ths digit address set)
DSA	Arrester	CNEC2	Connector (FAN indication)	SW14(I.B.)	Switch (connection No.set)
X10	Aux. relay	CNF	Connector (Humidity input)	SWA(I.B.)	Switch (for static pressure selection)
CN22	Connector (Fan control)	TH21	Thermistor (inlet air temp.detection)	SWC(I.B.)	Switch (for static pressure selection)
CN24-1	Connector (Heater control 1st)	TH22	Thermistor (piping temp.detection/liquid)	SWE(I.B.)	Connector (emergency operation)
CN24-2	Connector (Heater control 2nd)	TH23	Thermistor (piping temp.detection/gas)	LED1	LED (Power supply)
CN25	Connector (Humidity output)			LED2	LED (Remote controller supply)

Specifications are subject to change without notice.

© 2021 Mitsubishi Electric US, Inc.

7 REFRIGERANT SYSTEM DIAGRAM

TPVFYP008, 012, 018, 024, 030, 036, 048, 054AM141*

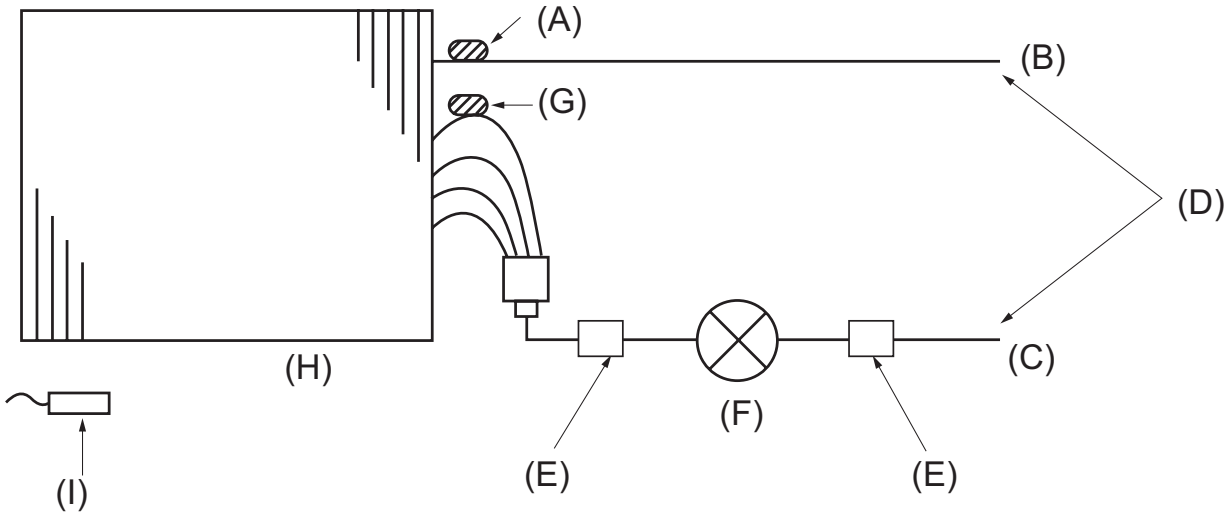

(A)	Gas pipe thermistor TH23
(B)	Gas pipe
(C)	Liquid pipe
(D)	Brazed connections
(E)	Strainer (#100 mesh)
(F)	Linear expansion valve
(G)	Liquid pipe thermistor TH22
(H)	Heat exchanger
(I)	Room temperature thermistor TH21

Capacity	TPVFYP008, 012, 018AM141*	TPVFYP024, 030, 036, 048, 054AM141*
Gas pipe	ø12.7 [1/2]	ø15.88 [5/8]
Liquid pipe	ø6.35 [1/4]	ø9.52 [3/8]

Specifications are subject to change without notice.
© 2021 Mitsubishi Electric US, Inc.

1. Cool operation

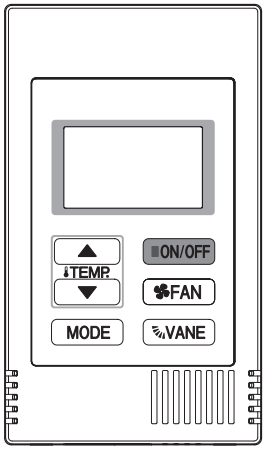

<How to operate>

1) Press POWER ON/OFF button.
2) Press the operation MODE button to display COOL.
3) Press the TEMP. button to set the desired temperature.

Note:
The set temperature changes 1° F (1.8° C) when the TEMP. button is pressed one time. Cooling 67 to 87° F.

1.) Thermo-regulating function
(1) Thermo-regulating function (Function to prevent restarting for 3 minutes)
When indoor units are connected to the PUHY/PURY/PQHY/PQRY series of outdoor units.

- Room temperature ≥ desired temperature + 0.9° F ···Thermo ON
- Room temperature < desired temperature - 0.9° F···Thermo OFF

When indoor units are connected to the PUMY series of outdoor units.

- Room temperature ≥ desired temperature + 0.9° F ···Thermo ON
- Room temperature < desired temperature - 0.9° F···Thermo OFF

(2) Anti-freezing control
- Detected condition :

When the liquid pipe temp. (TH22) is 32° F or less in 16 minutes from compressors start up, anti-freezing control starts and the thermo OFF.
- Released condition :

The timer which prevents reactivating is set for 3 minutes, and anti-freezing control is cancelled when any one of the following conditions is satisfied.
1) Liquid pipe temp. (TH22) turns 50° F or above.
2) The condition of the thermo OFF has become complete by thermo-regulating, etc.
3) The operation modes became mode other than COOL.
4) The operation stopped.

2) Fan
(1) By the remote controller setting (switch of 3 speeds+Auto).

Type	Fan speed notch
3 speeds + Auto type	[Low], [Med], [High], [Auto]

- When [Auto] is set, fan speed is changed depending on the value of:
  Room temperature - Desired temperature

Specifications are subject to change without notice.
© 2021 Mitsubishi Electric US, Inc.

2. Dry operation

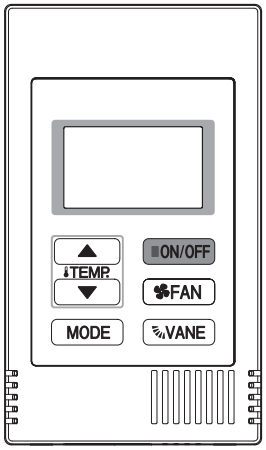

<How to operate>

1) Press POWER ON/OFF button.
2) Press the operation MODE button to display COOL.
3) Press the TEMP. button to set the desired temperature.

Note:
The set temperature changes 1° F when the TEMP. button is pressed one time. Cooling 67 to 87° F.

1.) Thermo regulating function
(1) Thermo regulating function (Function to prevent restarting for 3 minutes)
Setting the Dry thermo by the thermo regulating signal and the room temperature (TH21).

- Room temperature ≥ desired temperature + 2° F …Dry Thermo ON
- Room temperature < desired temperature …Dry Thermo OFF

Room temperature	3 min. passed since starting operation		Dry thermo ON time (min)	Dry thermo OFF time (min)
	Thermo regulating signal	Room temperature (T1)		
Over 64°F	ON	T1 ≥ 83°F	9	3
		83°F > T1 ≥ 79°F	7	3
		79°F > T1 ≥ 75°F	5	3
		75°F > T1	3	3
	OFF	Unconditional	3	10
Less than 64°F	Dry thermo OFF			

(2) Frozen prevention control
- No control function

2) Fan
(1) Indoor fan operation controlled depends on the compressor conditions.

Dry thermo	Fan speed notch	
ON	[Low]	
OFF	Room temp. ≥ 64°F	Stop
	Room temp. < 64°F	[Low]

Specifications are subject to change without notice.
© 2021 Mitsubishi Electric US, Inc.

3. Fan operation

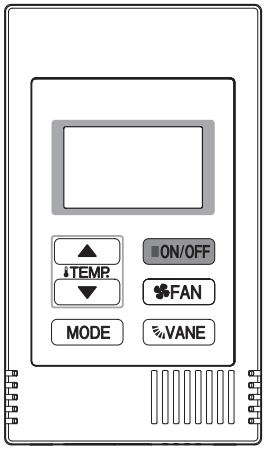

<How to operate>

1) Press POWER ON/OFF button.
2) Press the operation MODE button to display FAN.

1) Fan

(1) Set by remote controller.

Type	Fan speed notch
3 speeds + Auto type	[Low], [Med], [High], [Auto]

- When [Auto] is set, fan speed becomes [Low].

Specifications are subject to change without notice.
© 2021 Mitsubishi Electric US, Inc.

4. Heat operation

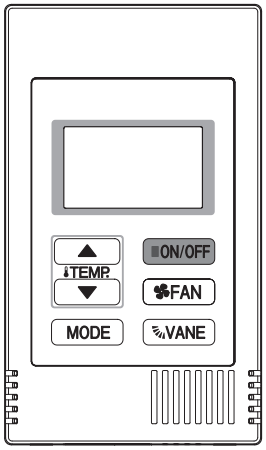

<How to operate>

1.) Press POWER ON/OFF button.
2.) Press the operation MODE button to display COOL.
3.) Press the TEMP. button to set the desired temperature.

Note:
The set temperature changes 1° F when the TEMP. button is pressed one time. Heating 63 to 83° F.

1.) Thermo-regulating function
(1) Thermo-regulating function (Function to prevent restarting for 3 minutes)
When indoor units are connected to the PUHY/PURY/PQHY/PQRY series of outdoor units.

- Room temperature < desired temperature - 0.9° F ⋯Thermo ON
- Room temperature ≥ desired temperature + 0.9° F⋯Thermo OFF

When indoor units are connected to the PUMY series of outdoor units.

- Room temperature < desired temperature - 0.9° F ⋯Thermo ON
- Room temperature ≥ desired temperature + 0.9° F⋯Thermo OFF

2) Fan
(1) By the remote controller setting (switch of 3 speeds+Auto).

Type	Fan speed notch
3 speeds + Auto type	[Low], [Med], [High], [Auto]

- When [Auto] is set, fan speed is changed depending on the value of:
  Desired temperature - Room temperature
  Give priority to under-mentioned controlled mode

1.) Hot adjust mode
2.) Preheating exclusion mode
3.) Thermo OFF mode (When the compressor off by the thermo-regulating)
4.) Cool air prevention mode (Defrosting mode)
5.) Capacity increasing mode

(2) Hot adjust mode
- The fan controller becomes the hot adjuster mode for the following conditions.

1.) 6.) When starting the HEAT operation
1.) 7.) When the thermo-regulating function changes from OFF to ON.
1.) 8.) When release the HEAT defrosting operation

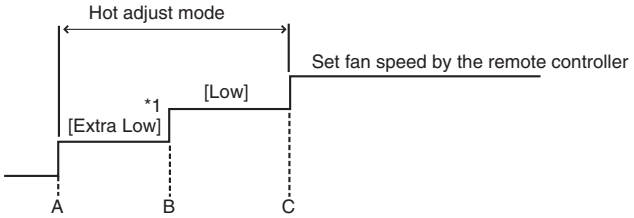

A: Hot adjust mode starts.
B: 5 minutes have passed since the condition A or the indoor liquid pipe temperature turned 95°F or more.
C: 2 minutes have passed since the condition A. (Terminating the hot adjust mode)
*1 The fan may stop, depending on the operation status of the indoor units or on the unit settings.

Specifications are subject to change without notice.
© 2021 Mitsubishi Electric US, Inc.

(3) Preheating exclusion mode
- When the condition changes the auxiliary heater ON to OFF (thermo-regulating or operation stop, etc.), the indoor fan operates in [Low] mode for 1 minute.

Note:
This control is same for the model without auxiliary heater.

(4) Thermo OFF mode
- When the thermo-regulating function changes to OFF, the indoor fan operates in [Extra low].

(5) Heat defrosting mode
- The indoor fan stops.

5. Auto operation [Automatic cool / heat change over operation]

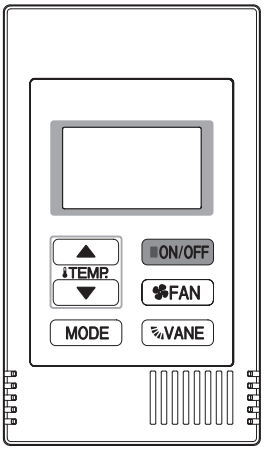

<How to operate>

1) Press POWER ON/OFF button.
2) Press the operation MODE button to display AUTO.
3.) Press the TEMP. button to set the desired temperature.

Note:
The set temperature changes 1° F when the TEMP. button is pressed one time. Heating 63 to 83° F.

1.) Initial value of operation mode
(1) HEAT mode for room temperature < Desired temperature
(2) COOL mode for room temperature ≥ Desired temperature

2) Mode change
(1) HEAT mode -> COOL mode
Room temperature Desired temperature + 3°F. or 3 min. has passed
(2) COOL mode -> HEAT mode
Room temperature Desired temperature - 3°F. or 3 min. has passed

3) COOL mode
(1) Same control as cool operation

4) HEAT mode
(1) Same control as heat operation
The value "3°F" is modifiable from 1.8°F to 9°F by maintenance tool.

Specifications are subject to change without notice.
© 2021 Mitsubishi Electric US, Inc.

6. Heater control

1. Control specifications and DIP S/W setting

- Table 1 shows the function settings the field-installed heater. Select the desired pattern in the table below, and set the DIP SW on the outdoor and indoor units as shown in Table 1.

Table 1.

Outdoor unit setting	Condition of outdoor unit		TPVFYAM141*				
			DIP S/W (Indoor unit)*1		Heater control		
			SW3-2	SW3-4	Pattern	Defrost	Error
DIP S/W OFF In the case of: TGMU: SW5-2 OFF THMU/YHMU/ TJMU/YJMU: SW5-10 OFF TKMU/YKMU: TLMU/YLMU & 3AN/4AN: SW4: 932 OFF PUMY-NHMU SW4-4 OFF: TUMY-1AK SW5-4 OFF	N / A		OFF	-	Heater not Available		
			ON	OFF	Heater Available	OFF	OFF
			ON	ON	Heater Available	ON	ON*2
DIP S/W ON In the case of: TGMU: SW5-2 ON THMU/YHMU/ TJMU/YJMU: SW5-10 ON TKMU/YKMU: TLMU/YLMU & 3AN/4AN SW4: 932 ON PUMY-NHMU SW4-4 ON TUMY-1AK SW5-4 ON	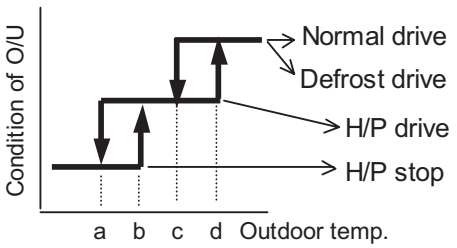 Parameters a/b/c/d are set by maintenance tool.	Normal drive	OFF	-	Heater not Available		
			ON	OFF	Heater Available	OFF	OFF
			ON	ON	Heater Available	ON	ON*2
		Defrost drive H/P drive H/P stop	OFF	-	Heater not Available		
			ON	OFF	Heater Available	OFF	OFF
			ON	ON	Heater Available	ON	ON*2

*1 Default settings: SW3-2 OFF, SW3-4 OFF
*2 Heater will not operate during all error modes. Heater will not work during error if the fan is set to stop in thermo off.

Specifications are subject to change without notice.
© 2021 Mitsubishi Electric US, Inc.

• Table 2 shows how the field-installed heater is controlled.

Table. 2 [Heater Control Table]

Mode Change	Condition								
	(To -T_{RA}) > 2.7 ° F [1.5 °C]	AND	T_{RA} has not increased by 0.9 °F [0.5° C] in X min	EH1 ON for > 5 min	AND	(To -T_{RA}) > 2.7 ° F [1.5 ° C]	AND	T_{RA} has not increased by 0.9 ° F [0.5° C] in 5 min	(To -T_{RA}) < 0.9 °F [0.5° C]
EH1 ON	○	AND	○						
EH2 ON				○	AND	○	AND	○	
EH1 OFF									○
EH2 OFF									○

KEY
- EH1: Electric Heater 1
- EH2: Electric Heater 2
- To: Set point temperature
- T_{RA}: Return Air temperature
- X: Time delay (Selectable. Default is 20 min. Selectable to 10, 15, or 25 min)

• Table 3 shows how the time delay is selected.

Table. 3 [Time Delay Selection Table]

Function Setting *1	Action *3
108-1	Set Time Delay to 10 minutes
108-2	Set Time Delay to 15 minutes
108-3	Set Time Delay to 20 minutes *2
108-4	Set Time Delay to 25 minutes

*1 Time delay can only be selected with MA controller. If use of a non-MA controller is desired, the time delay must first be selected with the MA controller. Then the non-MA controller can be attached and used.
*2 The default time delay setting is 20 minutes.
*3 Time delays are approximate.

© 2021 Mitsubishi Electric US, Inc.

• Chart 1 and Table 4 show an example of heater operation.

Chart 1 [Heater Operation Example]

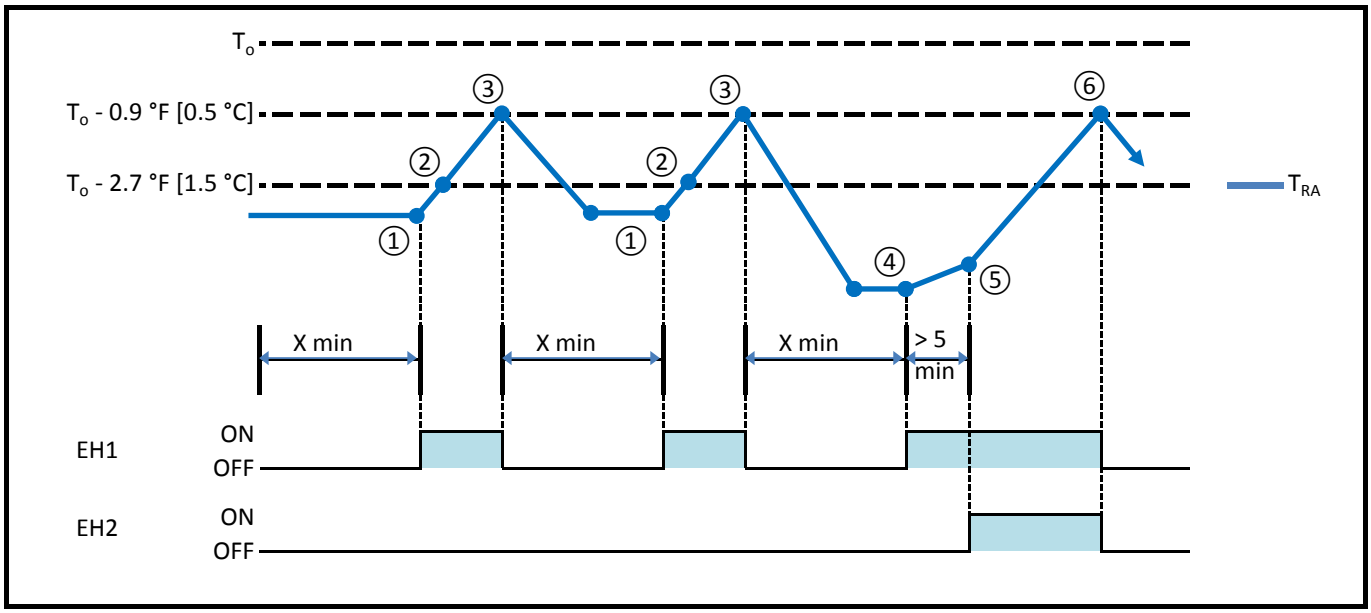

Table. 4 [Heater Operation Example]

Step	Condition			Result
①	(To -T_{RA}) > 2.7 °F [1.5 °C]	AND	T_{RA} has not increased by 0.9 °F [0.5°C] in X min	EH1 ON
②	(To -T_{RA}) < 2.7 °F [1.5 °C]	AND	T_{RA} increasing faster than 0.9 °F [0.5°C] in 5 min	EH2 not ON
③	(To -T_{RA}) < 0.9 °F [0.5°C]			EH1 OFF
④	(To -T_{RA}) > 2.7 °F [1.5 °C]	AND	T_{RA} has not increased by 0.9 °F [0.5°C] in X min	EH1 ON
⑤	(To -T_{RA}) > 2.7 °F [1.5 °C]	AND	T_{RA} not increasing faster than 0.9 °F [0.5°C] in 5 min	EH2 ON
⑥	(To -T_{RA}) < 0.9 °F [0.5°C]			EH1 OFF EH2 OFF

© 2021 Mitsubishi Electric US, Inc.

Note:
(1) Turning on the heater with the fan setting set to OFF requires that the DIP S/W and connectors on the indoor units are set on site.

Fan control

Pattern	TPVFYAM141*					
	CN22 for FAN control (CN24RELAY-KIT-CM3)	DIP S/W3-2 (Indoor unit)	DIP S/W3-4 (Indoor unit)	Fan in error *1	Fan in defrost	Fan (All modes other than defrost and error)
1	Disabled	ON	OFF	Stop (Heater OFF)		Set (Heater ON) High *2 (Heater ON)
2			ON	Stop (Heater OFF) High (Heater ON)		
3	Enabled		OFF	Low (Heater OFF)	Stop (Heater OFF)	Stop (Heater OFF) Stop (Heater ON)
4			ON	Low (Heater OFF) Low (Heater ON)	Stop (Heater OFF) Stop (Heater ON)	

*1 Heater will not operate during all error modes. Heater will not work during error if the fan is set to stop in thermo off.
*2 While the heater is on, the fan will operate at high speed regardless of the fan setting on the remote controller.

*** If a heater is installed in the duct, do not use CN22. By doing so, the fan will turn off when the heater is on, which may result in fire.**

(2) Back-up heating will not be performed when the heater turns on while demand control is performed (not a request item).
(3) This is applicable only to the R410 series. Make the settings for the following dip switches on the outdoor unit control board before switching on the power.

© 2021 Mitsubishi Electric US, Inc.

2. CN24RELAY-KIT-CM3 (Optional Parts) installation

The following section describes installation of the External Heater Adapter that connects to CITY MULTI air conditioner R410A series indoor unit. This product contains the special wiring componenets required to connect the electric heater to the unit.

(1) Parts list
- Check that the following parts are included in the package.

1) External output cable.....2 in total
Two types of cables with different connectors are included.
2) Panel heater connector.....3 in total
White: 3

(2) Connection to the indoor unit
- Use the cables that fit the connectors on the indoor unit control board.

1) External output cable
This cable is used to connect a relay circuit for an interlocked operation with either an electric or a panel heater.Select the heater output pattern (1st =CN24-1 or 2nd = CN24-2) to use, and connect the cable to the connector on the indoor unit control board that corresponds to the selection.
1) Panel heater connector
This connector is used to perform an interlocked operation with a panel heater. Depending on the indoor unit control board specification, connect the cable to CN22 as appropriate.

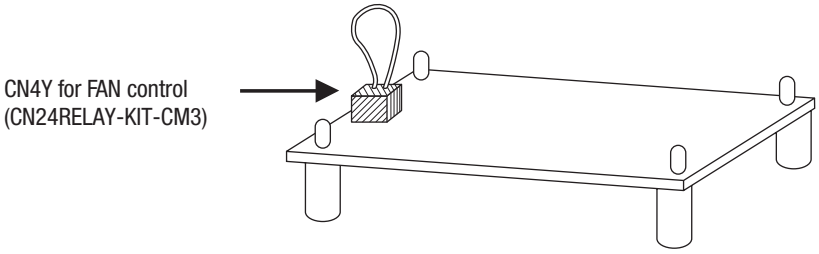

Note: This connector will stop the fan during auxillary heater operation and should not be used if the fan is required.

Specifications are subject to change without notice.
© 2021 Mitsubishi Electric US, Inc.

(3) Wiring

- A basic connection method is shown below.

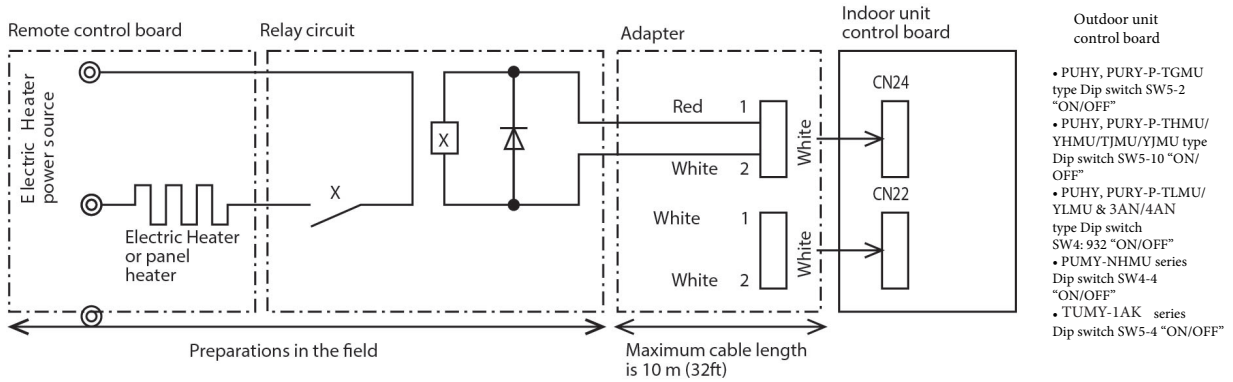

- The length of the electrical wiring for the CN24RELAY-KIT-CM3 is 2 meters (6-1/2 ft.)
- To extend this length, use sheathed 2-core cable.
  Control cable type: CVV, CVS, CPEV or equivalent.
  Cable size: 0.5 mm2 ~ 1.25 mm2 (16 to 22 AWG)
  Don't extend the cable more than 10 meters (32ft).

Recommended circuit

Wiring diagram

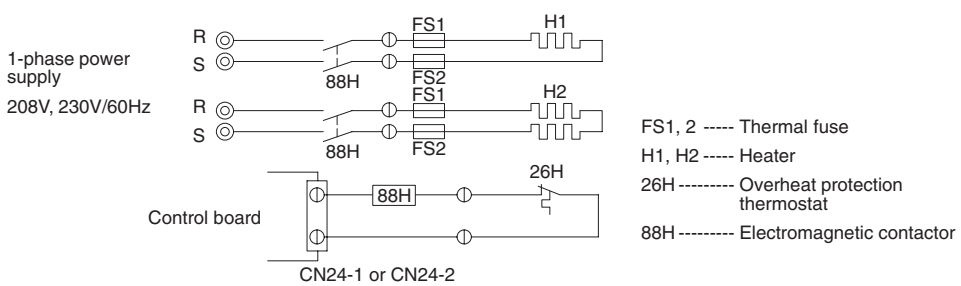

(4) Wiring restrictions

- Keep the length of the cable connecting to the circuit board of the indoor unit shorter than 10 meters (32ft).
- Longer than 10 meters (32ft) could cause improper operation.
- Use a transit relay when extending wiring such as remote wiring.

Specifications are subject to change without notice.

© 2021 Mitsubishi Electric US, Inc.

7. Humidifier control

1. Control specifications and DIP S/W setting

The below table shows how the field installed humidifier and fan speed is controlled.

DIP switch setting SW1-6	Humidistat output CNF input	Condition (no defrost/no error)	CN25 output	Fan speed
OFF	OFF	Heat operation & Thermo OFF	OFF	RC setting
		Heat operation & Thermo ON		
	ON	Heat operation & Thermo OFF	OFF	RC setting
		Heat operation & Thermo ON	ON	High
ON	OFF	Heat operation & Thermo OFF	OFF	RC setting
		Heat operation & Thermo ON		
	ON	Heat operation & Thermo OFF	ON	High
		Heat operation & Thermo ON		
-	-	Except for heat operation	OFF	RC setting

RC:Remote controller
The fan continues to run for 30 seconds after the humidifier stops.

2. Installation

A basic connection method is shown below.

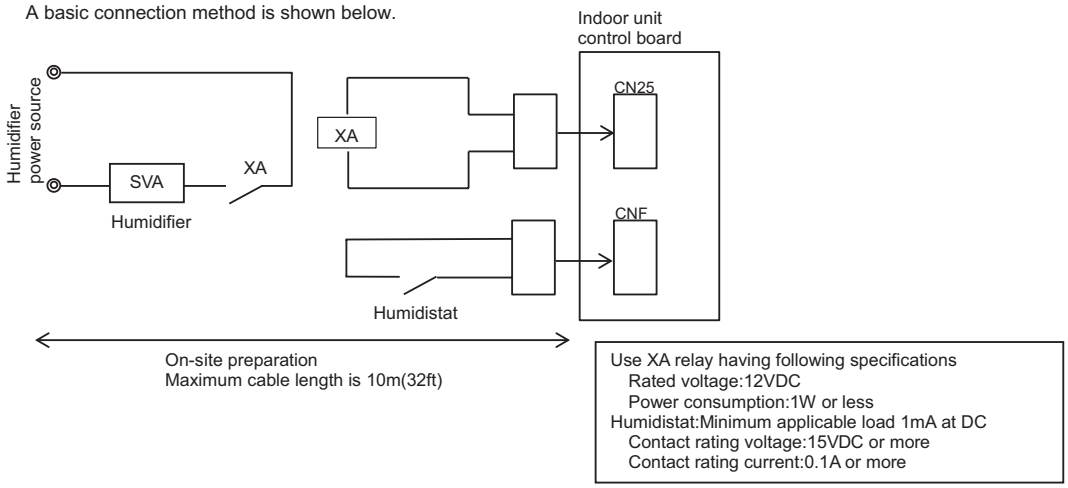

8. Fan indication

1. Indication specifications

The below table shows how the fan indication is controlled.

Condition Fan speed	CNEC2 output	
	Relay on the board	No. of CNEC2
Very low	X11	1
Low	X12	2
Middle	X13	3
High	X14	4

2. Installation

A basic connection method is shown below.

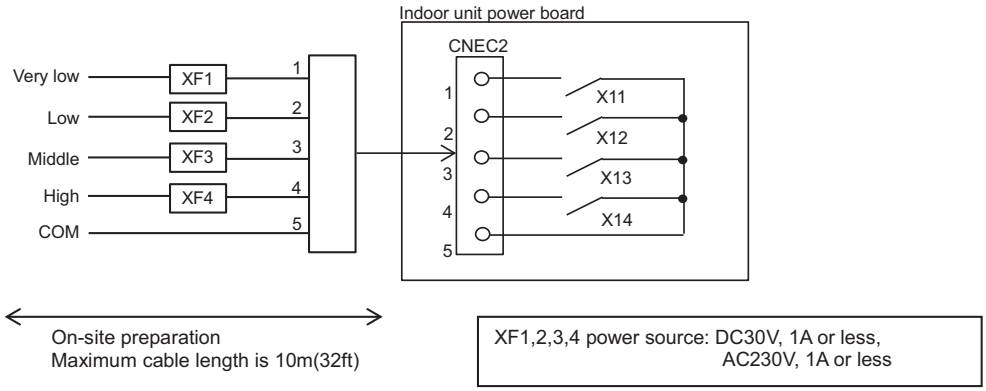

© 2021 Mitsubishi Electric US, Inc.

1. Check methods

1. Component and check points

(1) Thermistor

- Room temperature thermistor (TH21)
- Liquid pipe thermistor (TH22)
- Gas pipe thermistor (TH23)

$$Rt = 15 \exp \{ 3480(\frac{1}{273+t} - \frac{1}{273}) \}$$

Disconnect the connector and measure the resistance between terminals with a tester.
(Ambient temperature 10°C - 30°C[50°F-86°F])

Normal	Abnormal
4.3kΩ - 9.6kΩ	Open or short

(Refer to the thermistor characteristic graph below.)

1) Thermistor characteristic graph

Low-temperature thermistor

- Room temperature thermistor (TH21)
- Liquid pipe thermistor (TH22)
- Gas pipe thermistor (TH23)
- Drain sensor (DS)

- Thermistor R_0 = 15 kΩ±3%
- Multiplier of B = 3480 kΩ±2%

0°C	32°F	15kΩ
10°C	50°F	9.6kΩ
20°C	68°F	6.3kΩ
25°C	77°F	5.2kΩ
30°C	86°F	4.3kΩ
40°C	104°F	3.0kΩ

(A)Temperature (°C)[°F]
(B)Resistance (kΩ)

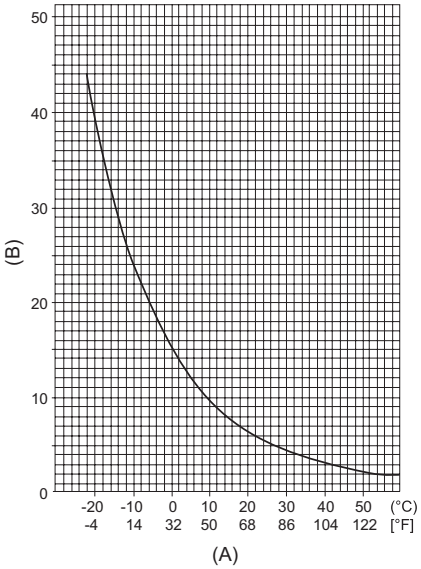

(2) Fan motor (CNMF)
Refer to the page on "DC fan motor (fan motor/indoor control board)."

(3) Linear expansion valve
Disconnect the connector, and measure the resistance between terminals with a tester.
Refer to the next page for details.

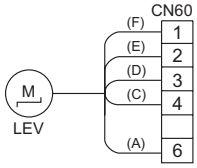

Normal			Abnormal	
1-6	2-6	3-6	4-6	Open or short
White-Red	Yellow-Red	Orange-Red	Blue-Red	
(150) 10%				

(A)Red
(C)Blue
(D)Orange
(E)Yellow
(F)White

Specifications are subject to change without notice.
© 2021 Mitsubishi Electric US, Inc.

1) Summary of linear expansion valve (LEV) operation

- The LEV is operated by a stepping motor, which operates by receiving a pulse signal from the indoor control board.
- The LEV position changes in response to the pulse signal.

Indoor control board and LEV connection

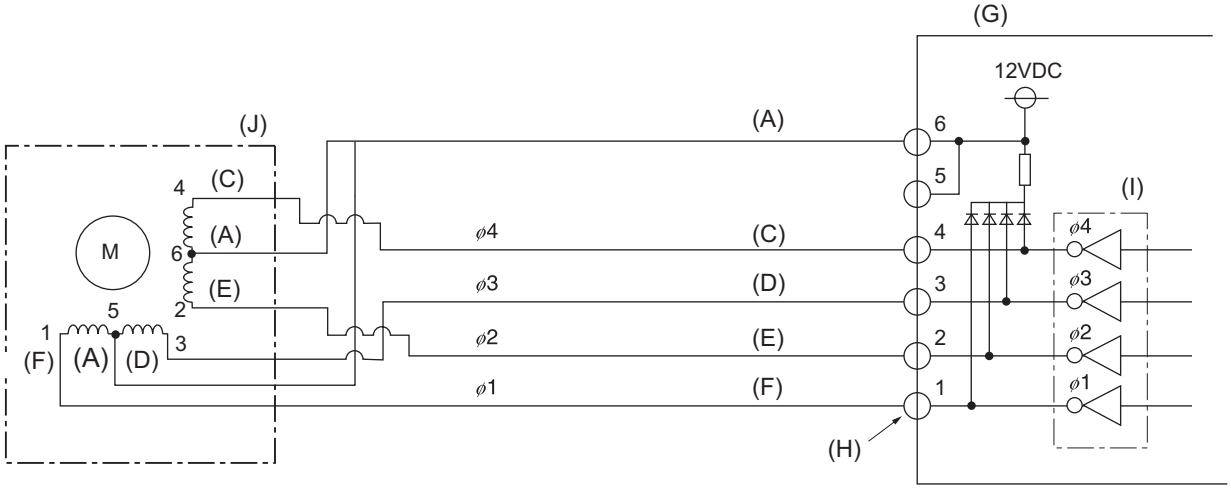

(A)Red
(C)Blue
(D)Orange
(E)Yellow
(F)White

(G) Control board
(H) Connection (CN60)
(I) Drive circuit
(J) Linear expansion valve

Pulse signal output and valve operation

Phase number	Output pulse			
	1	2	3	4
ø1	ON	OFF	OFF	ON
ø2	ON	ON	OFF	OFF
ø3	OFF	ON	ON	OFF
ø4	OFF	OFF	ON	ON

The output pulse changes in the following order:
When the valve closes 1 -> 2 -> 3 -> 4 -> 1
When the valve opens 4 -> 3 -> 2 -> 1 -> 4

- When the valve position remains the same, all output signals will be OFF.
- If any output signal is missing or if the signal remains ON, the motor vibrates and makes clicking noise.

Specifications are subject to change without notice.
© 2021 Mitsubishi Electric US, Inc.

2) LEV operation

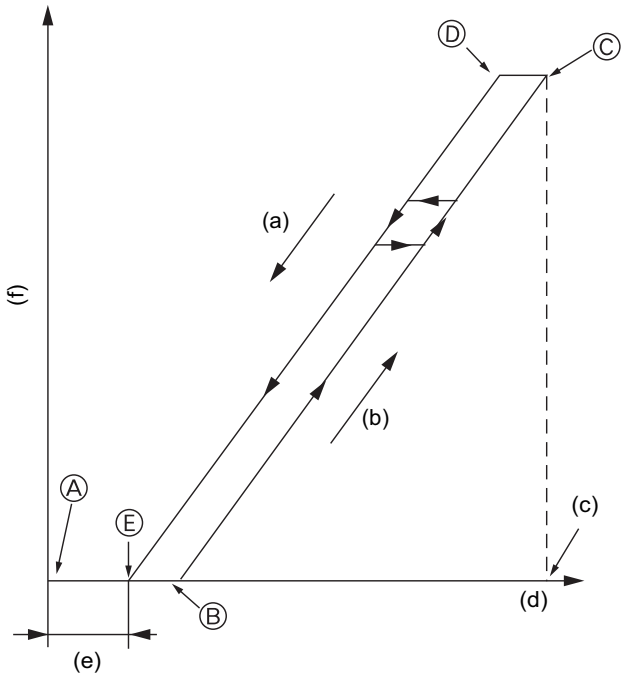

(a) Close
(b) Open
(c) Fully open valve (2000 pulses or 3000 pulses)
(d) No. of pulses
(e) Extra tightening (41 - 100 pulse)
(f) Valve opening degree

- When the power is turned on, a pulse signal of fully closed + 10% is output (valve closure signal), to bring the valve to position A.
- When the valve is operating normally, it is free of vibration noise. If the valve locks or when it goes from point E to A in the figure, it makes louder noise than would be heard when there is an open phase.
- Check for abnormal sound/vibration by placing the metal tip of a screwdriver against the valve and the handle side against your ear.

3) Troubleshooting

Symptom	Checking Criteria	Remedy
Circuit failure on the microcomputer	Disconnect the connectors on the control board, and connect LEDs to test the circuit as shown below. 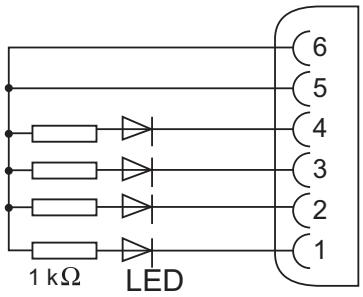 Pulse signals are output for 10 seconds when the main power is turned on. If there are LEDs that do not light up at all or remain lit after the pulses are turned off, there is a problem with the driving circuit.	Replace the indoor control board if driving circuit failure is detected.
Locked LEV	The motor will idle and make small clicking noise if it is run while the LEV is locked. If this clicking noise is heard both when the valve is fully closed and while it is being opened, it indicates a problem.	Replace the LEV.
Disconnected or shorted LEV motor coils	Measure the resistance between the coils with a tester (red-white, red-orange, Red-yellow, Red-blue). The normal range of resistance is 150kΩ±10%.	Replace the LEV.

Specifications are subject to change without notice.
© 2021 Mitsubishi Electric US, Inc.

Symptom	Checking Criteria	Remedy
Valve closure failure (leaky valve)	To check the LEV on the indoor unit, check the indoor unit liquid pipe temperature that appears on the operation monitor on the outdoor unit's multi control board while operating the indoor unit in question in the FAN mode and the other indoor units in the cooling mode. (A) Thermistor (TH22) 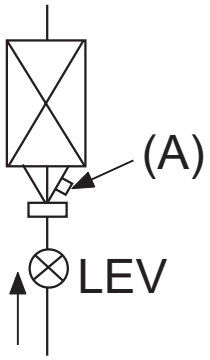 	Replace the LEV if the amount of leakage is great.
	Normally, the LEV is fully closed while the unit is in the FAN mode. If the valve is leaky, liquid pipe thermistor reading will be lower than normal. If it is significantly lower than the inlet temperature on the remote controller, valve closure failure is suspected. If the amount of leakage is insignificant, replacement of LEV is unnecessary unless it is causing a problem.	
Misconnections of connectors or contact failure	Perform a visual check for disconnected connectors. Perform a visual check of lead wire color.	Disconnect the connectors on the control board and perform a continuity test.

Specifications are subject to change without notice.
© 2021 Mitsubishi Electric US, Inc.

2. DC fan motor (fan motor/indoor control board

1. CAUTION

- A high voltage is applied to the connector for connection to the fan motor (CNMF).
- Do not unplug the connector CNMF with the unit energized to avoid damage to the indoor control board and fan motor.

2. Troubleshooting

Symptom : The indoor fan cannot turn around.

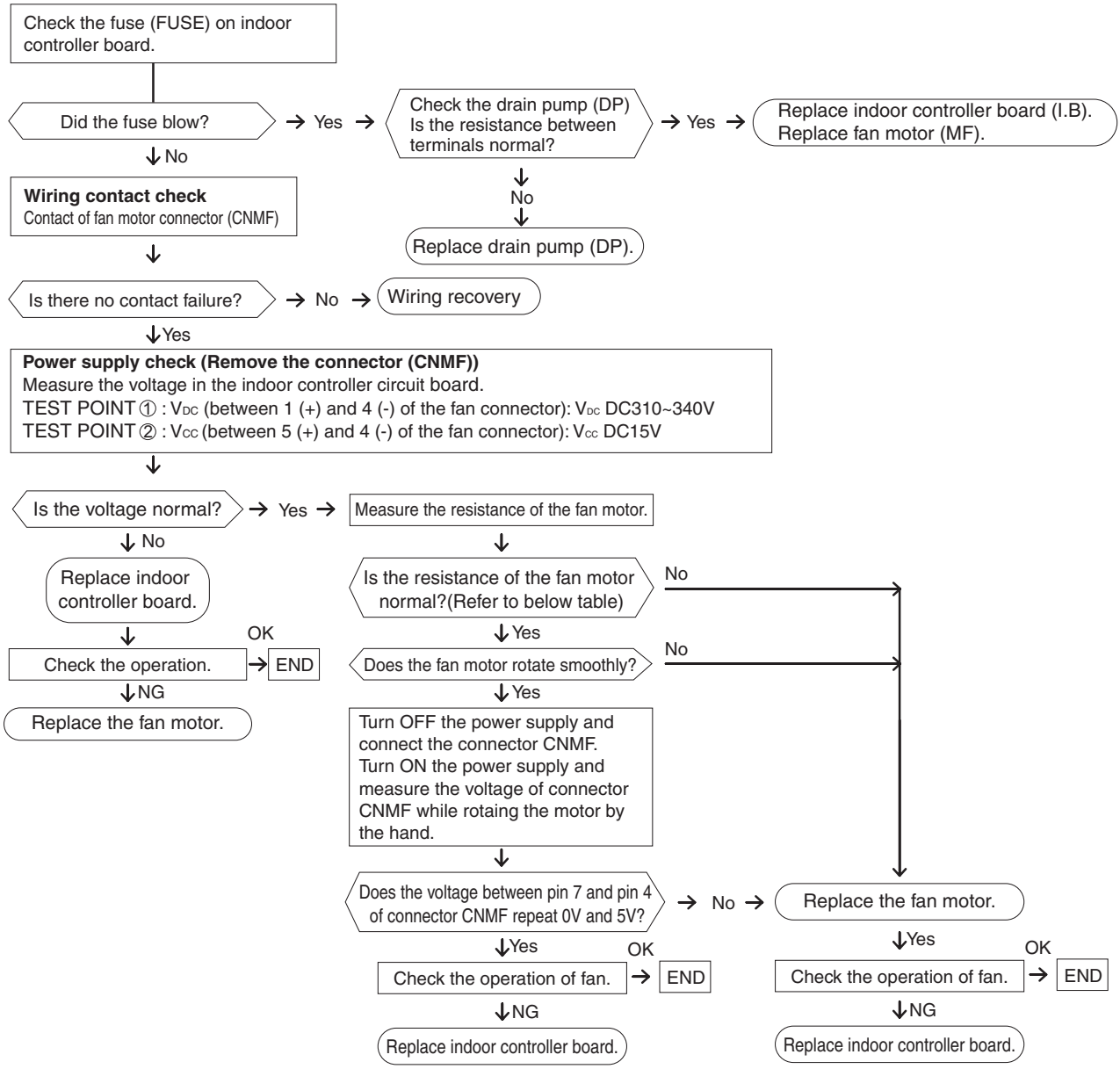

	TPVFYP008, 012, 018, 024, 030, 036AM141*	TPVFYP048, 054AM141*
Measuring points	Resistance	
pin 1 - pin 4	O.L.	1MΩ
pin 5 - pin 4	50kΩ	47kΩ
pin 6 - pin 4	150kΩ	143kΩ
pin 7 - pin 4	O.L.	O.L.

*To measure the resistance, connect the negative (-) end of the tester to pin 4.

© 2021 Mitsubishi Electric US, Inc.

3, Address switch setting

Make sure that power to the unit is turned off.

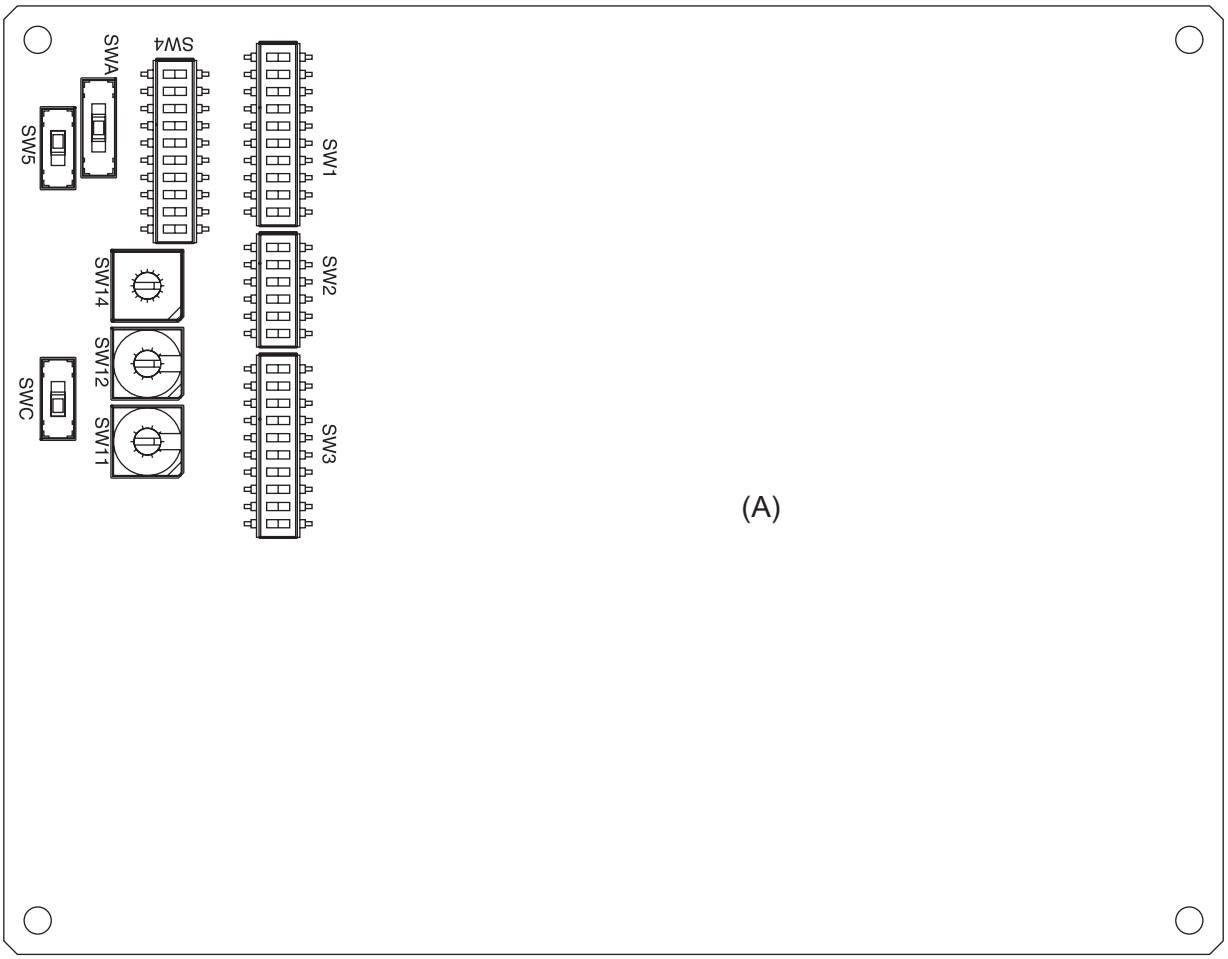

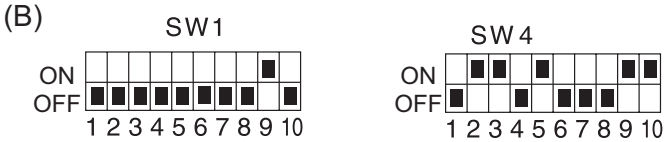

(A)Indoor unit control board
(B)Factory setting (all models)

1. Address settings vary in different systems.
   Refer to the section on address setting in the outdoor unit installation manual.

2. Address is set with a combination of SW12 (10's digit) and SW11 (1's digit).
   To set the address to "3," set SW12 to "0" and SW11 to "3."
   To set the address to "25," set SW 12 to "2" and SW 11 to "5."

Specifications are subject to change without notice.
© 2021 Mitsubishi Electric US, Inc.

4. Voltage test points on the control board

1. TPVFYP008, 012, 018, 024, 030, 036, 048, 054AM141*

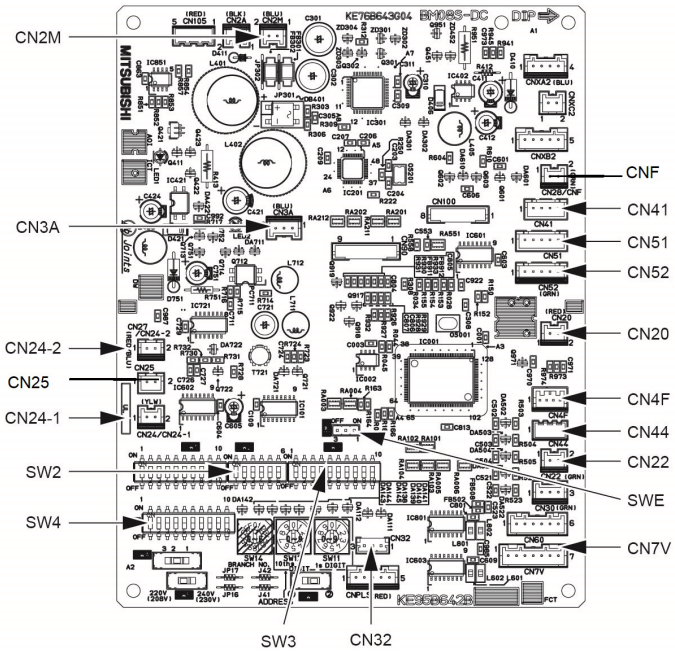

Indoor controller board

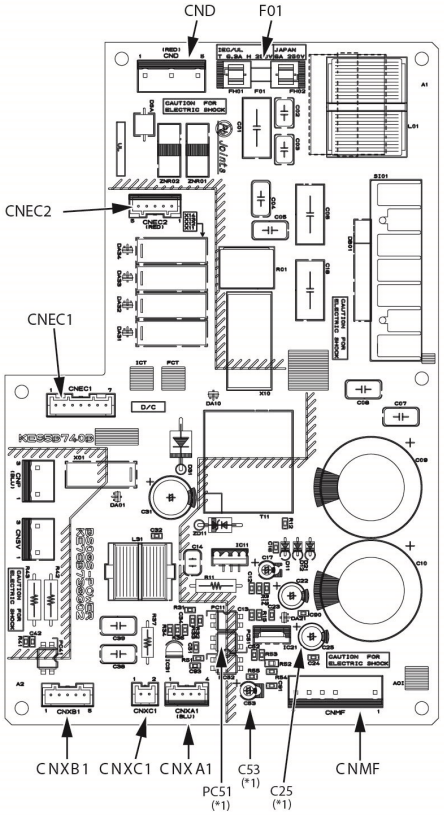

F01	Fuse (AC 250V 6.3A)
CND	Power supply voltage (220 - 240VAC)
CN2M	For M-NET transmission cable connection (24 - 30VDC)
SWE	Emergency operation
SW2	Capacity setting
SW4	Function setting
SW3	Function setting
CN32	Remote start/stop adapter
CN3A	For MA remote controller cable connection (10 - 13 VDC (Between 1 and 3.))
CN52	Remote display
CN51	Centralized control
CN41	JAMA standard HA terminal A
CN44	Thermistor (liquid/gas temperature)
CN25	Humidifier output
CNF	Humidistat input
CN4F	Float sensor
CN22	For fan control
CN24-1	For 1st heater control
CN24-2	For 2nd heater control
CN20	Thermistor (Inlet temperature)
CNMF	Fan motor output 1 - 4: 294 - 340 VDC 5 - 4: 15 VDC 6 - 4: 0 - 6.5 VDC 7 - 4: Stop 0 or 15 VDC Run 7.5 VDC (0 - 15 pulse)
CN7V	Connect to the indoor power board
CNEC1	Connect to the indoor controller board
CNEC2	FAN OUT
(*1)	
VFG	Voltage on the (-) side of PC51 and C25 (Same with the voltage between 7 (+) and 4 (-) of CNMF)
VCC	Voltage between the C25 pins 15 VDC (Same with the voltage between 5 (+) and 4 (-) of CNMF)
Vsp	Voltage between the C53 pins 0VDC (with the fan stopped) 1 - 6.5VDC (with the fan in operation) (Same with the voltage between 6 (+) and 4 (-) of CNMF)

Specifications are subject to change without notice.

© 2021 Mitsubishi Electric US, Inc.

5. Dipswitch setting (Factory setting)

1. Function setting

(1) SW1

Switch position	Function	Switch setting	
		ON	OFF
1	Active Thermistor (Intake air thermistor)	Built-in thermistor on the remote controller	Indoor unit
2	Filter clogging detection	Available	Unavailable
3	Filter life	2500 hr	100 hr
4	Outdoor air intake	Enabled	Disabled
5	Remote display	Thermo-ON signal	Fan output
6	Humidifier operation	During heating mode	During heating operation
7	Fan speed	Low	Very low
8	Fan speed at heating Thermo-OFF	Preset fan speed	Follows the setting of SW1-7
9	Auto restart after power failure	Enabled	Disabled
10	Power start/stop	Enabled	Disabled

1) Adress board

Factory setting

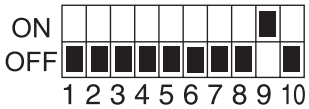

(2) SW3

Switch position	Function	Switch setting	
		ON	OFF
1	Unit type	Cooling only	Heat pump
2	Heater available	Heater available	Heater not available
3	-	-	-
4	Heater control	Heater ON during defrost and error	Heater OFF during defrost and error
5	-		
6	-	-	-
7	-	-	-
8	Heating 4-deg up	Disabled	Enabled
9	-	-	-
10	-	-	-

Indoor control board

Dipswitch settings must be made while the unit is stopped.

Factory setting

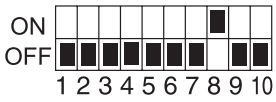

For P08 only

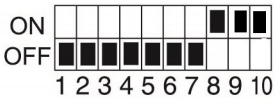

Specifications are subject to change without notice.

© 2021 Mitsubishi Electric US, Inc.

2. Capacity code setting
(1) SW2
1) Indoor control board
Dipswitch settings must be made while the unit is stopped.
Factory setting
The switches are set to correspond to the unit capacity.

TPVFYP008AM141*

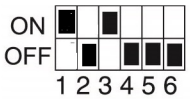

TPVFYP012AM141*

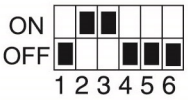

TPVFYP018AM141*

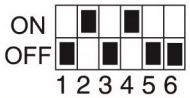

TPVFYP024AM141*

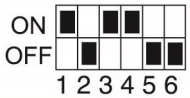

TPVFYP030AM141*

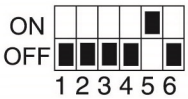

TPVFYP036AM141*

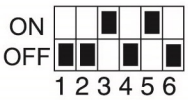

TPVFYP048AM141*

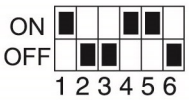

TPVFYP054AM141*

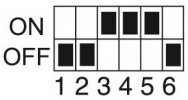

3. Model setting
(1) SW4
1) Indoor control board
Dipswitch settings must be made while the unit is stopped.

Factory setting

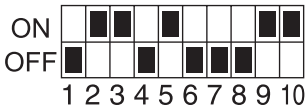

Note:
Changes made to the dipswitches SW1, SW2, and SW3 will become effective when the unit comes to a stop (remote controller off). There is no need to power cycle the unit.

4. Power voltage setting
(1) SW5
1) Indoor control board
Dipswitch settings must be operated with the main power turned OFF.

Factory setting

Set SW5 to 240V side when the power supply is 230 volts.
When the power supply is 208 volts, set SW5 to 220V side.

Specifications are subject to change without notice.
© 2021 Mitsubishi Electric US, Inc.

5. External static pressure
(1) SWA, SWC
1) Indoor control board

All models

① Vertical, Horizontal Right, Horizontal left

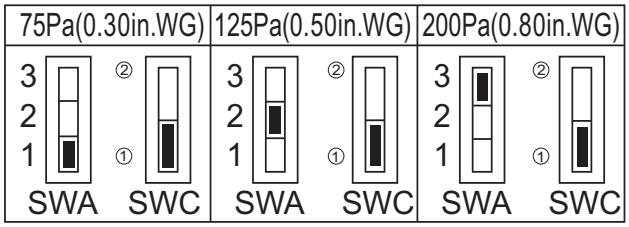

② Down flow

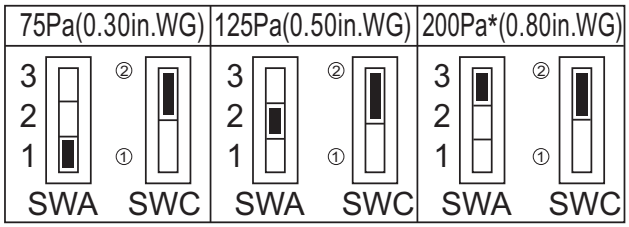

TPVFYP036 in Downflow External static pressure: 150Pa (0.60in.WG)
TPVFYP054 in Downflow External static pressure: 175Pa (0.70in.WG)

Factory setting

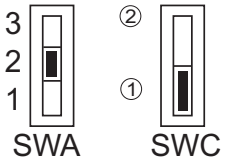

Note:
Changes that are made to the dipswitches SWA and SWC immediately become effective regardless of the unit's operation status (RUN/STOP) or the remote controller status (ON/OFF).

6. 1s and 10ths digits
(1) SW11, SW12 (Rotary switch)
The use of a ME remote controller requires address setting.
1) Indoor control board
Address settings must be made while the unit is stopped.

Factory setting

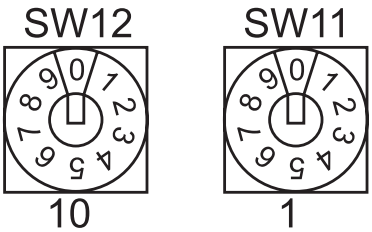

7. Connection No. setting
(1) SW14 (Rotary switch)
This switch is used when the unit connected to an R2 series of outdoor unit.
1) Indoor control board

Factory setting

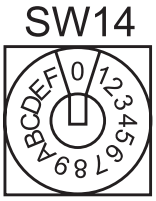

Note:
Changes to the dipswitches SW11, SW12, SW14, and SW15 must be made while the unit is stopped and the remote controller is OFF.

Specifications are subject to change without notice.
© 2021 Mitsubishi Electric US, Inc.

10 DISASSEMBLY PROCEDURE

1. Control box
Exercise caution when removing heavy parts.

1. Remove the Electric panel (2 screws).

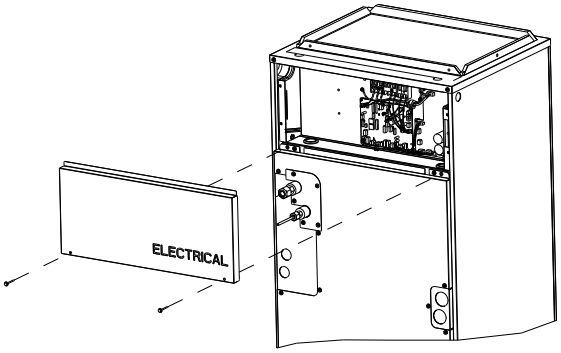

Fig.1

2. Thermistor (Return Air)
Exercise caution when removing heavy parts.

1. Remove the Filter panel (2 thumbscrews).
2. Remove the Blower panel (2 screws).

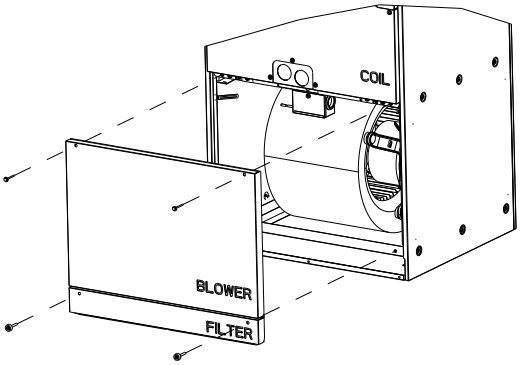

Fig. 3

3. Remove the cover over the Return Air thermistor box and unplug the thermistor.
4. Pull out the thermistor holder and thermistor inside the box.

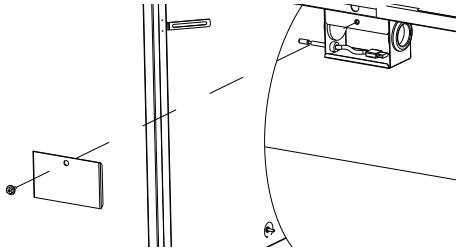

Fig. 4

Specifications are subject to change without notice.
© 2021 Mitsubishi Electric US, Inc.

3. Coil Assembly (thermistor, drainpan, heat exchanger)
Exercise caution when removing heavy parts.

1. Remove the Electrical, Blower and Filter panel indicated in sections 1 and 2.
2. Remove the Coil panel by removing all of the screws securing it to the (3) smaller panels for refrigerant and drain lines.

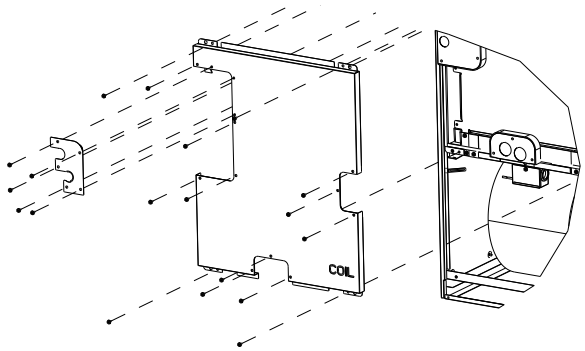

Fig. 5

3. Slide the smaller panels in the directions indicated and remove.

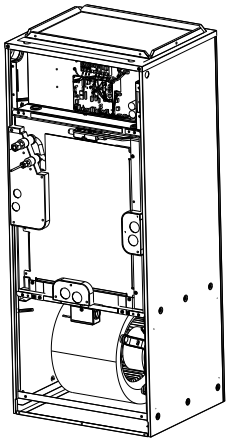

Fig. 6

4. Remove the (1 or 2) brackets that secure the coil, unplug the thermistors and LEV from the control board and route the wires out of the control box area and into the coil section. Next, slide the coil from the frame.

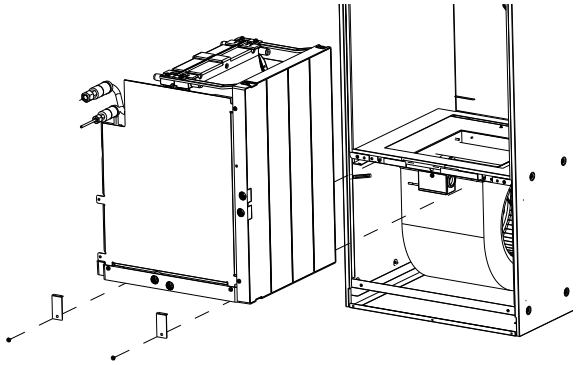

Fig. 7

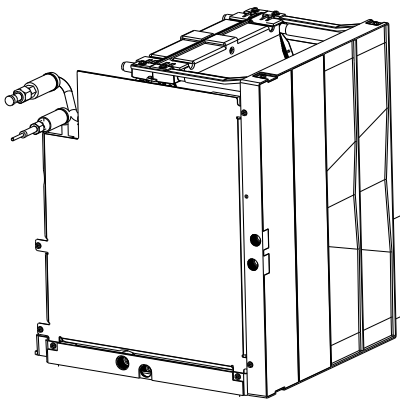

Fig. 8

Specifications are subject to change without notice.
© 2021 Mitsubishi Electric US, Inc.

5. Remove the plate covering the coil assembly to access the thermistors.

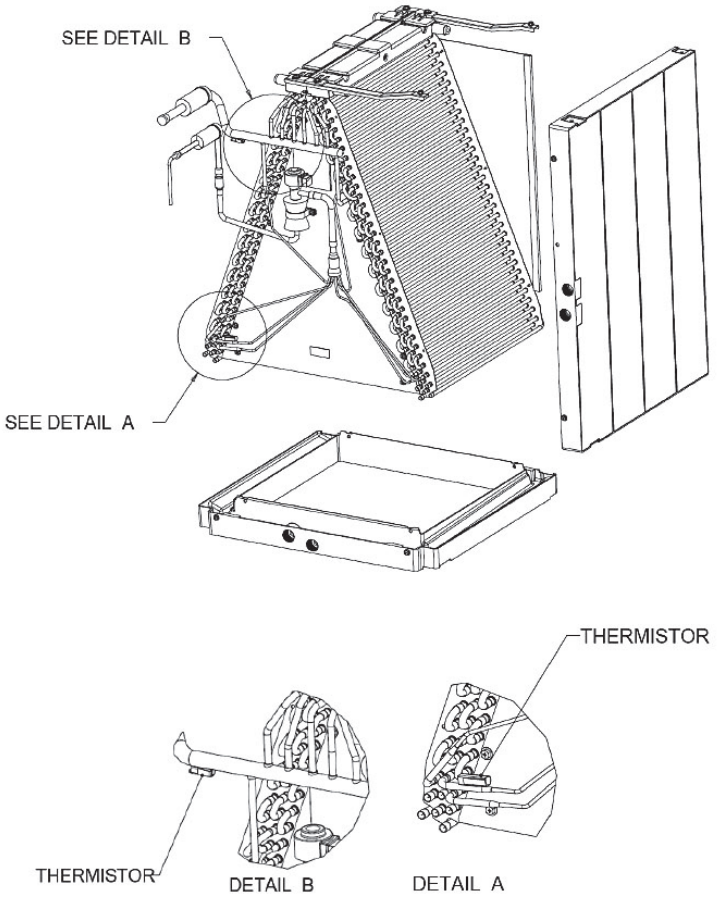

Fig. 9

6. Remove lower and side drain pan.

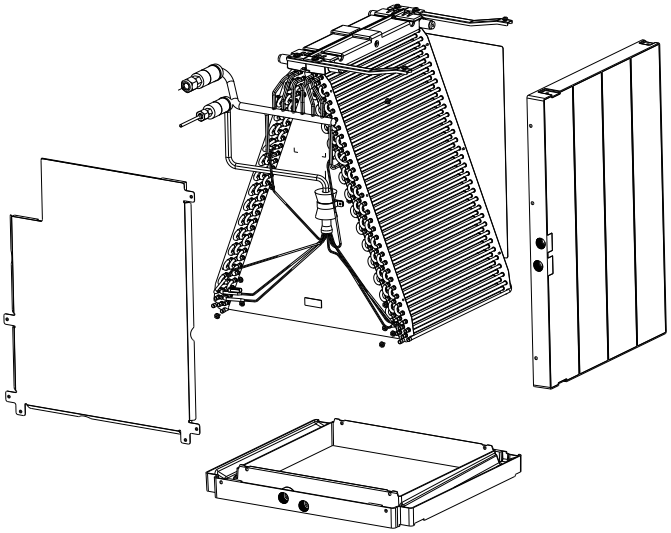

Fig. 10

Specifications are subject to change without notice.

© 2021 Mitsubishi Electric US, Inc.

4. Blower/Fan Assembly
Exercise caution when removing heavy parts.

1. Remove the Blower and Filter panel (along with filter if installed) indicated in section 2.
2. Remove the (1 or 2) brackets that secure the coil assembly. (Fig.11)

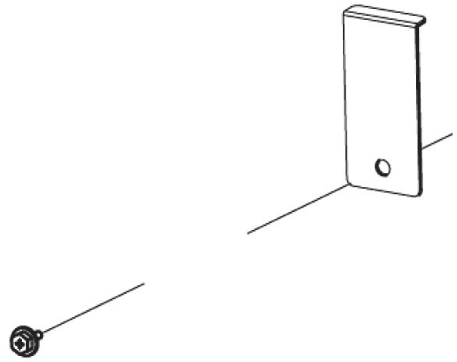

Fig. 11

3. Remove the door that covers the small enclosure attached to the fan assembly (Fig.12). Unplug the motor and route the wire harness out of the enclosure.
4. Remove the (2) screws that secure the fan assembly and slide out.

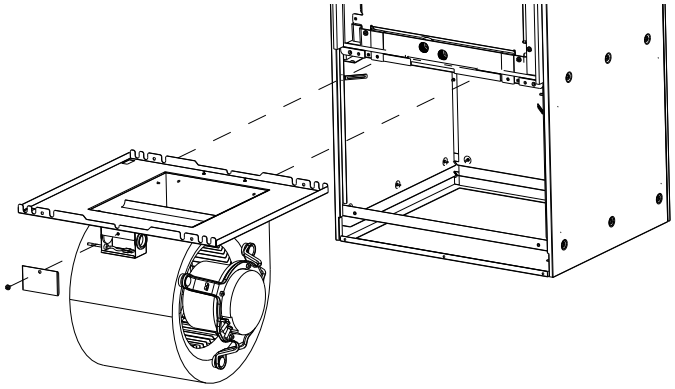

Fig. 12

Specifications are subject to change without notice.
© 2021 Mitsubishi Electric US, Inc.

This product is designed and intended for use in the residential, commercial and light-industrial environment.

Please be sure to put the contact address/telephone number on this manual before handing it to the customer.

MITSUBISHI ELECTRIC US, INC.
www.mitsubishielectric-usa.com
Toll Free: 800-433-4822

MEUS DOC# MD-1404-K044, Ver.1
December 2021

Specifications are subject to change without notice.

© 2021 Mitsubishi Electric US, Inc.