AIR CONDITIONERS

2021

R410A

TECHNICAL & SERVICE MANUAL

Model name

<Indoor unit>

TPEFYP072MH140A

TPEFYP096MH140A

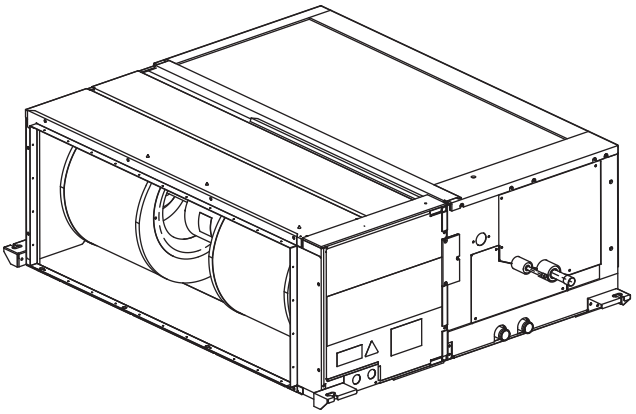

2nd edition

Safety Precautions

Read before installation and performing electrical work

- Thoroughly read the following safety precautions prior to installation.
- Observe these safety precautions for your safety.
- This equipment may have adverse effects on the equipment on the same power supply system.
- Contact the local power authority before connecting to the system.

Symbol explanations

WARNING
This symbol indicates that failure to follow the instructions exactly as stated poses the risk of serious injury or death.

CAUTION
This symbol indicates that failure to follow the instructions exactly as stated poses the risk of serious injury or damage to the unit.

Indicates an action that must be avoided.

Indicates important instructions.

Indicates a parts that requires grounding.

Indicates that caution must be taken with rotating parts. (This symbol is on the main unit label.) <Color: Yellow>

Indicates that the parts that are marked with this symbol pose a risk of electric shock. (This symbol is on the main unit label.) <Color: Yellow>

WARNING
Carefully read the labels affixed to the main unit.

WARNING

Ask your dealer or a qualified technician to install the unit.
Improper installation by the user may result in water leakage, electric shock, or fire.

Properly install the unit on a surface that can withstand its weight.
Unit installed on an unstable surface may fall and cause injury.

Only use specified cables. Securely connect each cable so that the terminals do not carry the weight of the cable.
Improperly connected cables may produce heat and start a fire.

Take appropriate safety measures against wind gusts and earthquakes to prevent the unit from toppling over.
Improper installation may cause the unit to topple over and cause injury or damage to the unit.

Only use accessories (i.e., air cleaners, humidifiers, electric heaters) recommended by Mitsubishi Electric Trane HVAC US LLC.

Do not make any modifications or alterations to the unit. Consult your dealer for repair.
Improper repair may result in water leakage, electric shock, or fire.

Do not touch the heat exchanger fins with bare hands.
The fins are sharp and pose a risk of cuts.

In the event of a refrigerant leak, thoroughly ventilate the room.
If gaseous refrigerant leaks out and comes in contact with an open flame, toxic gases will be generated.

Properly install the unit according to the instructions in the Installation Manual.
Improper installation may result in water leakage, electric shock, or fire.

Have all electrical work performed by an authorized electrician according to the local regulations and the instructions in this manual. Use a dedicated circuit.
Insufficient power supply capacity or improper installation of the unit may result in malfunctions of the unit, electric shock, or fire.

⚠ WARNING

Keep electrical parts away from water.
Wet electrical parts pose a risk of electric shock, smoke, or fire.

Securely attach the control box cover.
If the cover is not installed properly, dust or water may infiltrate and pose a risk of electric shock, smoke, or fire.

Only use the type of refrigerant that is indicated on the unit when installing or relocating the unit.
Infiltration of any other types of refrigerant or air into the unit may adversely affect the refrigerant cycle and may cause the pipes to burst or explode.

When installing the unit in a small space, take appropriate precautions to prevent leaked refrigerant from reaching the limiting concentration.
Leaked refrigerant gas will displace oxygen and may cause oxygen starvation. Consult your dealer before installing the unit.

Consult your dealer or a qualified technician when moving or reinstalling the unit.
Improper installation may result in water leakage, electric shock, or fire.

After completing the service work, check for a refrigerant leak.
If leaked refrigerant is exposed to a heat source, such as a fan heater, stove, or electric grill, toxic gases will be generated.

Do not try to defeat the safety features of the unit.
Forced operation of the pressure switch or the temperature switch by defeating the safety features for these devices, or the use of accessories other than the ones that are recommended by Mitsubishi Electric Trane HVAC US LLC may result in smoke, fire, or explosion.

Consult your dealer for proper disposal method.

Do not use a leak detection additive.

Precautions for handling units for use with R410A

⚠ CAUTION

Do not use the existing refrigerant piping.
A large amount of chlorine that may be contained in the residual refrigerant and refrigerator oil in the existing piping may cause the refrigerator oil in the new unit to deteriorate.

Use refrigerant piping materials made of phosphorus deoxidized copper. Keep the inner and outer surfaces of the pipes clean and free of such contaminants as sulfur, oxides, dust, dirt, shaving particles, oil, and moisture.
Contaminants in the refrigerant piping may cause the refrigerator oil to deteriorate.

Store the piping materials indoors, and keep both ends of the pipes sealed until immediately before brazing. (Keep elbows and other joints wrapped in plastic.)
Infiltration of dust, dirt, or water into the refrigerant system may cause the refrigerator oil to deteriorate or cause the compressor to malfunction.

Use a small amount of ester oil, ether oil, or alkyl benzene to coat flares and flanges.
Infiltration of a large amount of mineral oil may cause the refrigerator oil to deteriorate.

Charge the system with refrigerant in the liquid phase.
If gaseous refrigerant is drawn out of the cylinder first, the composition of the remaining refrigerant in the cylinder will change and become unsuitable for use.

Only use R410A.
The use of other types of refrigerant that contain chloride may cause the refrigerator oil to deteriorate.

Use a vacuum pump with a check valve.
If a vacuum pump that is not equipped with a check valve is used, the vacuum pump oil may flow into the refrigerant cycle and cause the refrigerator oil to deteriorate.

Prepare tools for exclusive use with R 410A. Do not use the following tools if they have been used with the conventional refrigerant: gauge manifold, charging hose, gas leak detector, check valve, refrigerant charge base, vacuum gauge, and refrigerant recovery equipment.
If the refrigerant or the refrigerator oil that may be left on these tools are mixed in with R410A, it may cause the refrigerator oil in the new system to deteriorate. Infiltration of water may cause the refrigerator oil to deteriorate. Leak detectors for conventional refrigerants will not detect an R410A leak because R410A is free of chlorine.

Do not use a charging cylinder.
If a charging cylinder is used, the composition of the refrigerant in the cylinder will change and become unsuitable for use.

Exercise special care when handling tools for use with R410A.
Infiltration of dust, dirt, or water into the refrigerant system may cause the refrigerator oil to deteriorate.

CONTENTS

[1] Components and Functions 1
[2] Specifications 4
[3] Sound pressure levels 6
[4] Fan performance and corrected air flow 9
[5] Outlines and Dimensions 11
[6] Wiring Diagram 12
[7] Refrigerant system diagram 13
[8] Troubleshooting 14
[9] Disassembly Procedure 61
[10] Optional parts 68

[1] Components and Functions

1. Indoor Unit

(1) In case of rear inlet

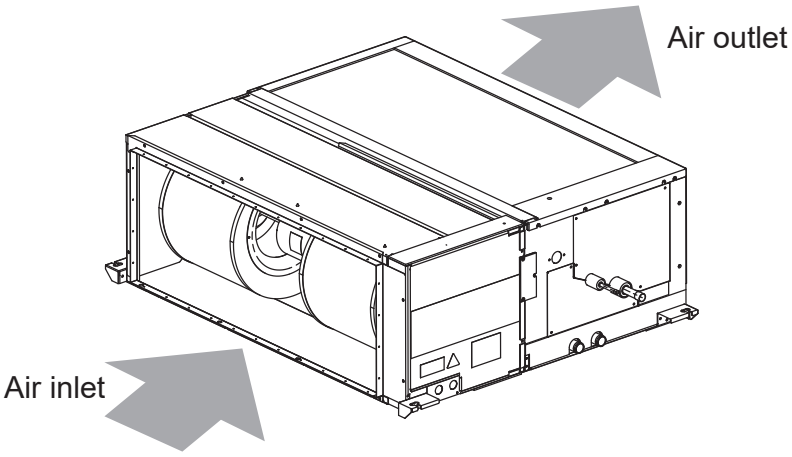

2. Remote Controller

[TAR-40MAAU]
Once the operation mode is selected, the unit will remain in the selected mode until changed.

(1) Remote Controller Interface

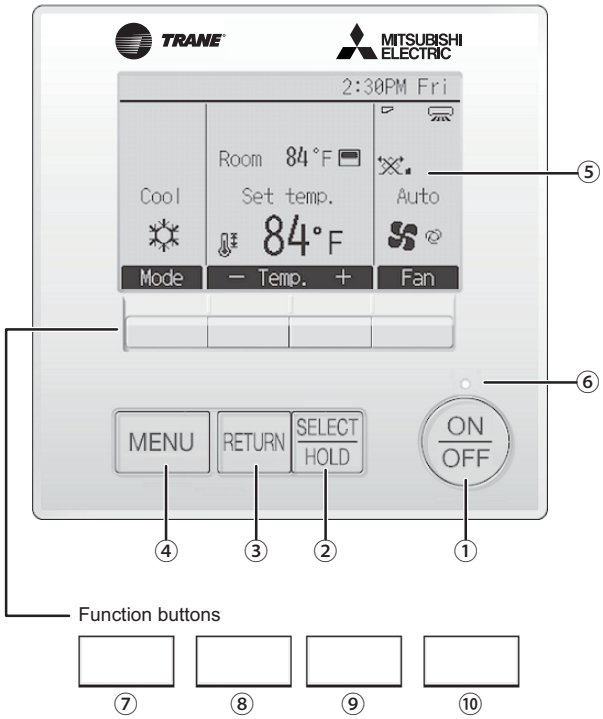

① [ON/OFF] button

Press to turn ON/OFF the indoor unit.

② [SELECT/HOLD] button

Press to save the setting.
When the Main menu is displayed, pressing this button will enable/disable the HOLD function.

③ [RETURN] button

Press to return to the previous screen.

④ [MENU] button

Press to bring up the Main menu.

⑤ Backlit LCD

Operation settings will appear.
When the backlight is off, pressing any button turns the backlight on and it will stay lit for a certain period of time depending on the screen.

> When the backlight is off, pressing any button turns the backlight on and does not perform its function. (except for the [ON/OFF] button)

⑥ ON/OFF lamp

This lamp lights up in green while the unit is in operation. It blinks while the remote controller is starting up or when there is an error.

The functions of the function buttons change depending on the screen. Refer to the button function guide that appears at the bottom of the LCD for the functions they serve on a given screen.
When the system is centrally controlled, the button function guide that corresponds to the locked button will not appear.

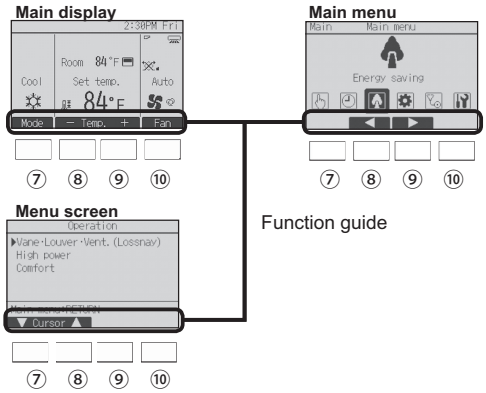

⑦ Function button [F1]

Main display: Press to change the operation mode.
Menu screen: The button function varies with the screen.

⑧ Function button [F2]

Main display: Press to decrease temperature.
Main menu: Press to move the cursor left.
Menu screen: The button function varies with the screen.

⑨ Function button [F3]

Main display: Press to increase temperature.
Main menu: Press to move the cursor right.
Menu screen: The button function varies with the screen.

⑩ Function button [F4]

Main display: Press to change the fan speed.
Menu screen: The button function varies with the screen.

(2) Remote Controller Display

The main display can be displayed in two different modes: “Full” and “Basic.” The factory setting is “Full.” To switch to the “Basic” mode, change the setting on the Main display setting.

Full mode

* All icons are displayed for explanation.

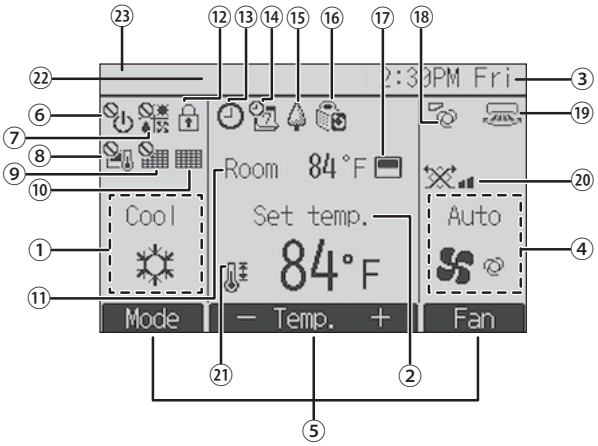

Basic mode

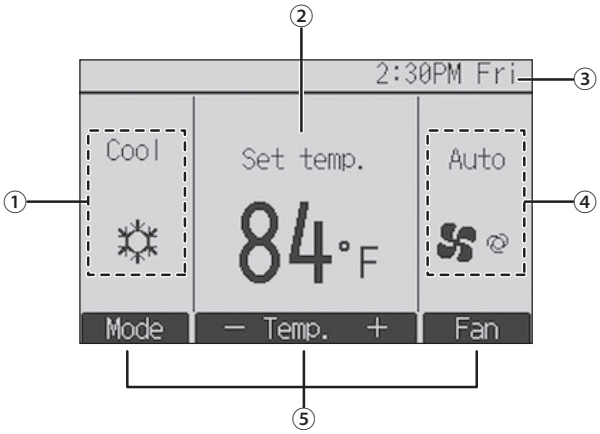

① Operation mode

Indoor unit operation mode appears here.

② Set temperature

Set temperature appears here.

③ Clock

Current time appears here.

④ Fan speed

Fan speed setting appears here.

⑤ Button function guide

Functions of the corresponding buttons appear here.

⑥

Appears when the ON/OFF operation is centrally controlled.

⑦

Appears when the operation mode is centrally controlled.

⑧

Appears when the set temperature is centrally controlled.

⑨

Appears when the filter reset function is centrally controlled.

⑩

Indicates when filter needs maintenance.

⑪ Room temperature

Current room temperature appears here.

⑫

Appears when the buttons are locked.

⑬

Appears when the On/Off timer or Auto-off timer function is enabled.

appears when the timer is disabled by the centralized control system.

appears when the HOLD function is enabled.

⑭

Appears when the Weekly timer is enabled.

⑮

Appears while the units are operated in the energy-save mode. (Will not appear on some models of indoor units)

⑯

Appears while the outdoor units are operated in the silent mode.

⑰

Appears when the built-in thermistor on the remote controller is activated to monitor the room temperature (⑪).

appears when the thermistor on the indoor unit is activated to monitor the room temperature.

⑱

Indicates the vane setting.

⑲

Indicates the louver setting.

⑳

Indicates the ventilation setting.

㉑

Appears when the set temperature range is restricted.

㉒ Centrally controlled

Appears for a certain period of time when a centrally-controlled item is operated.

㉓ Error display

An error code appears during the error.

* When an error code is displayed on the main display, an error is occurring but the indoor unit can keep its operation. If an error occurs, note the error code and consult your dealer.

Most settings (except ON/OFF, mode, fan speed, temperature) can be made from the Main menu.

[2] Specifications

1. Specifications

Model				TPEFYP072MH140A	TPEFYP096MH140A
Power supply		Voltage	V	1-phase 208-230	
		Frequency	Hz	50/60	
Capacity*1		Cooling	kW[BTU/h]	21.1 (72,000)	28.1 (96,000)
		Heating	kW[BTU/h]	23.4 (80,000)	31.7 (108,000)
Power consumption	50Pa [0.20in.WG]	Cooling	kW	0.43	0.59
		Heating	kW		
	100Pa [0.40in.WG]	Cooling	kW	0.52	0.70
		Heating	kW		
	150Pa [0.60in.WG]	Cooling	kW	0.63	0.82
		Heating	kW		
	200Pa [0.80in.WG]	Cooling	kW	0.75	0.95
		Heating	kW		
	250Pa [1.00in.WG]	Cooling	kW	0.89	0.97
		Heating	kW		
Current consumption *2	50Pa [0.20in.WG]	Cooling	A	2.31	3.08
		Heating	A		
	100Pa [0.40in.WG]	Cooling	A	2.79	3.75
		Heating	A		
	150Pa [0.60in.WG]	Cooling	A	3.32	4.43
		Heating	A		
	200Pa [0.80in.WG]	Cooling	A	3.95	5.10
		Heating	A		
	250Pa [1.00in.WG]	Cooling	A	4.81	5.29
		Heating	A		
External finish				Galvanized	
Dimensions		Height	mm[in.]	470 (18-9/16)	
		Width	mm[in.]	1250 (49-1/4)	
		Depth	mm[in.]	1120 (44-1/8)	
Net weight				97	100
Heat exchanger				Cross fin (Alminium fin and copper tube)	
Fan		Type		Sirocco fan x 2	
		Airflow rate (H-M-L)	m^3/min [cfm]	72-61-50 2542-2154-1766	84-71-58 2966-2507-2048
		External static pressure	Pa [in.WG]	(50)/(100)/150/(200)/(250) (0.20)/(0.40)/0.60/(0.80)/(1.00)	
Motor		Output	kW	0.87	
Air filter				Option	
Refriferant pipe dimensions		Gas (Brazed connection)	mm	ø19.05	ø22.2
			[in.]	ø3/4	ø7/8
		Liquid (Brazed connection)	mm	ø9.52	
			[in.]	ø3/8	
Drain pipe dimensions			mm	O.D.32	
			[in.]	1-1/4	
Operating noise (H-M-L)		50Pa [0.20in.WG]	dB(A)	39-35-32	42-38-35
		100Pa [0.40in.WG]		41-37-34	44-40-37
		150Pa [0.60in.WG]		43-39-36	46-42-39
		200Pa [0.80in.WG]		45-41-38	48-44-41
		250Pa [1.00in.WG]		47-43-40	50-46-43

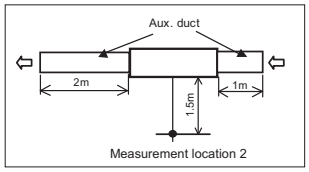

* Measured in anechoic room.

*1 <Cooling> Indoor temperature: 80°FD.B./67°FW.B. (26.7°CD.B./19.4°CW.B.) Outdoor temperature: 95°FD.B.(35°CD.B.)
<Heating> Indoor temperature: 70°FD.B.(21.1°CD.B.) Outdoor temperature: 47°FD.B./43°FW.B. (8.3°CD.B./6.1°CW.B.)

*2 Measured at a power supply voltage of 230 V

2. Electrical component specifications

Component	Symbol	
Room temperature thermistor	TH21	Resistance 32°F (0°C)/15kΩ, 50°F (10°C)/9.6kΩ, 68°F (20°C)/6.3kΩ, 77°F (25°C)/5.4kΩ, 86°F (30°C)/4.3kΩ, 104°F (40°C)/3.0kΩ
Liquid pipe thermistor	TH22	Resistance 32°F (0°C)/15kΩ, 50°F (10°C)/9.6kΩ, 68°F (20°C)/6.3kΩ, 77°F (25°C)/5.4kΩ, 86°F (30°C)/4.3kΩ, 104°F (40°C)/3.0kΩ
Gas pipe thermistor	TH23	Resistance 32°F (0°C)/15kΩ, 50°F (10°C)/9.6kΩ, 68°F (20°C)/6.3kΩ, 77°F (25°C)/5.4kΩ, 86°F (30°C)/4.3kΩ, 104°F (40°C)/3.0kΩ
Fuse (INV board)	F01	250V 15A
Fuse (NF board)	F001	250V 10A
Fuse (NF board)	F100	250V 3.15A
Fan motor	MF	8-pole, Output 870W ERC8801AB
Linear expansion valve	LEV1 LEV2	12VDC Stepping motor drive port diameter ø3.2 (0~2000 pulse)
Power supply terminal block	TB2	(L, N, ⏚) 450V 30A

[3] Sound pressure levels

1. Sound pressure level

Ceiling concealed

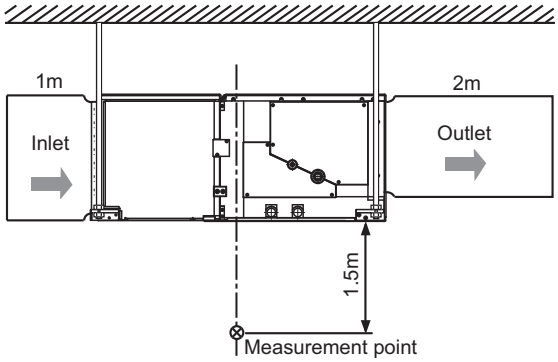

2. NC curves

TPEFYP072MH140A

External Static Pressure:50Pa, 0.20[in.WG]
Power Source: 208, 230V, 50Hz/60Hz

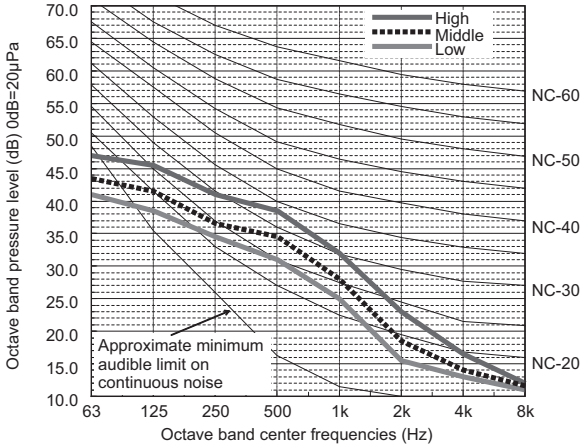

External Static Pressure:100Pa, 0.40[in.WG]
Power Source: 208, 230V, 50Hz/60Hz

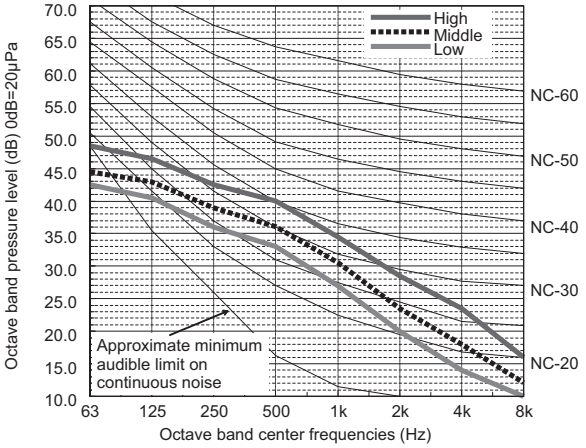

External Static Pressure:150Pa, 0.60[in.WG]
Power Source: 208, 230V, 50Hz/60Hz

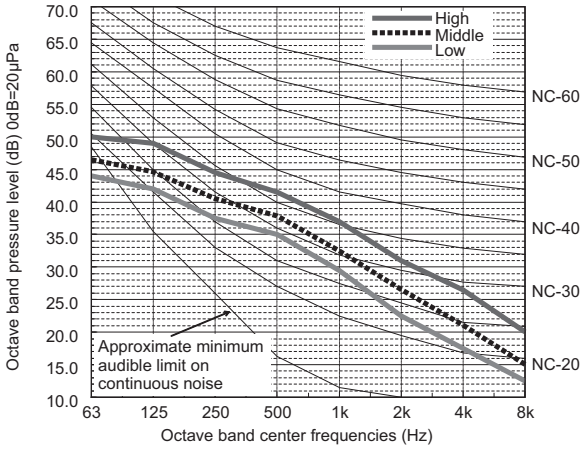

External Static Pressure:200Pa, 0.80[in.WG]
Power Source: 208, 230V, 50Hz/60Hz

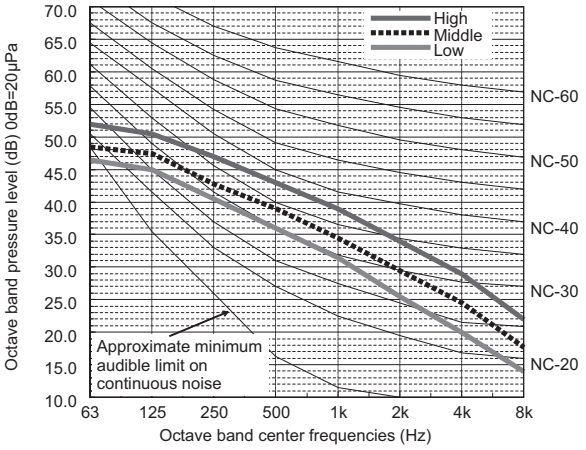

External Static Pressure:250Pa, 1.00[in.WG]
Power Source: 208, 230V, 50Hz/60Hz

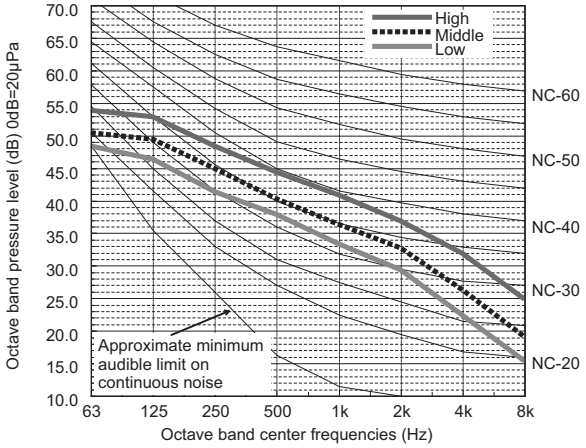

TPEFYP096MH140A

External Static Pressure:50Pa, 0.20[in.WG]
Power Source: 208, 230V, 50Hz/60Hz

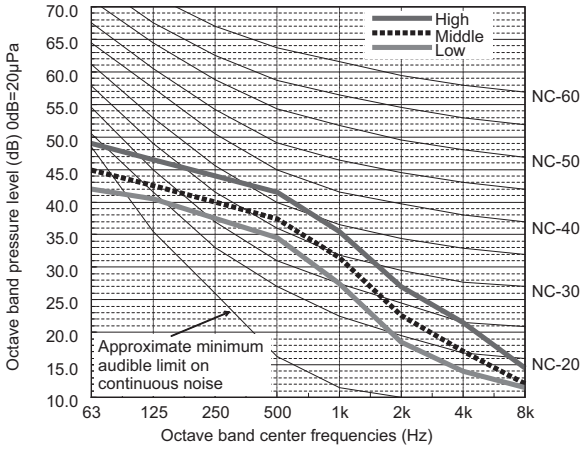

External Static Pressure:100Pa, 0.40[in.WG]
Power Source: 208, 230V, 50Hz/60Hz

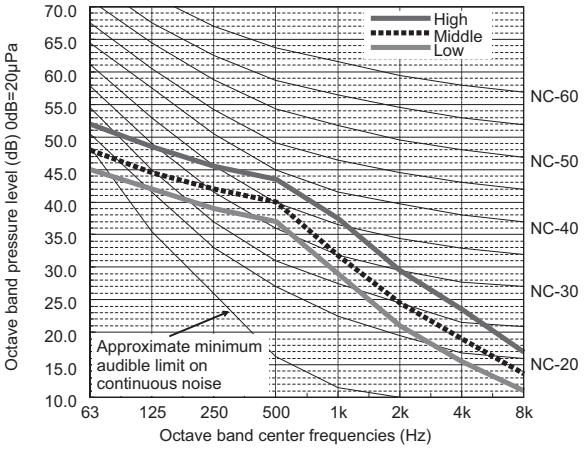

External Static Pressure:150Pa, 0.60[in.WG]
Power Source: 208, 230V, 50Hz/60Hz

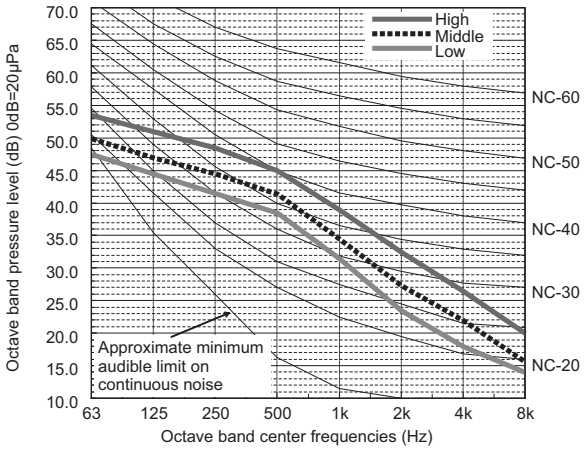

External Static Pressure:200Pa, 0.80[in.WG]
Power Source: 208, 230V, 50Hz/60Hz

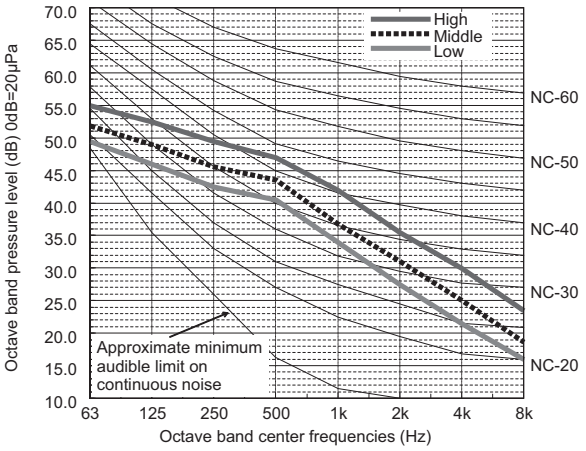

External Static Pressure:250Pa, 1.00[in.WG]
Power Source: 208, 230V, 50Hz/60Hz

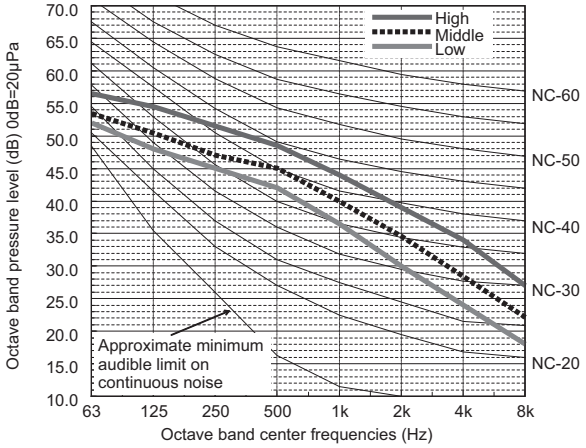

[4] Fan performance and corrected air flow

TPEFYP072MH140A

External static pressure :50Pa, 0.20[in.WG]
Power source:208, 230V, 50Hz/60Hz

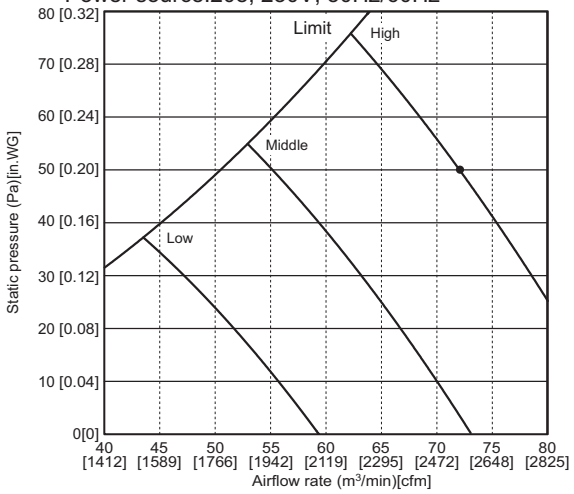

External static pressure :100Pa, 0.40[in.WG]
Power source:208, 230V, 50Hz/60Hz

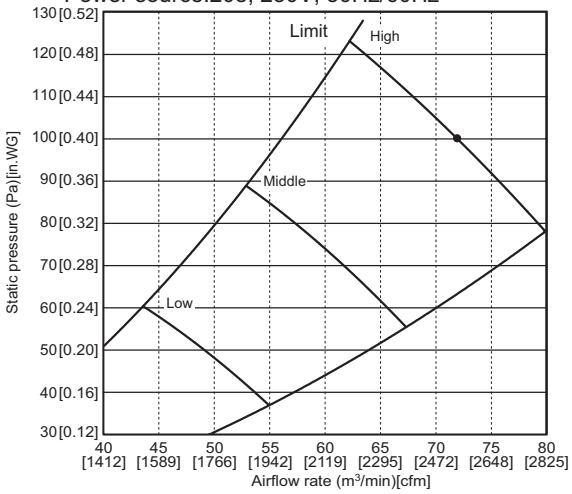

External static pressure :150Pa, 0.60[in.WG]
Power source:208, 230V, 50Hz/60Hz

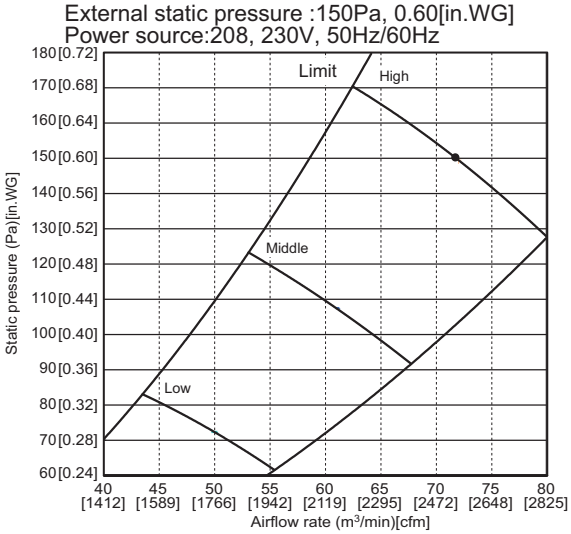

External static pressure :200Pa, 0.80[in.WG]
Power source:208, 230V, 50Hz/60Hz

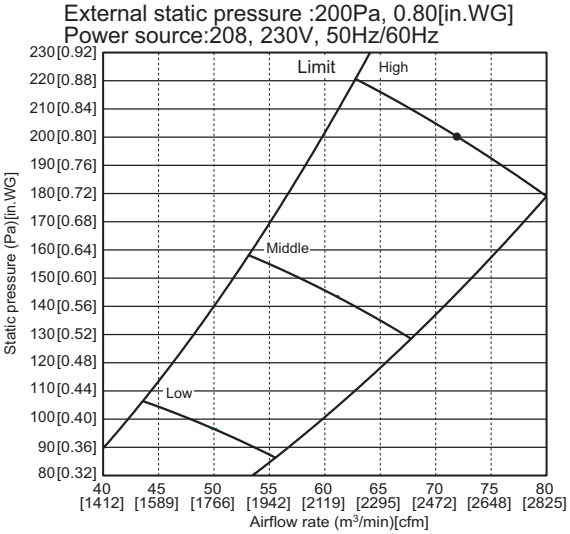

External static pressure :250Pa, 1.00[in.WG]
Power source:208, 230V, 50Hz/60Hz

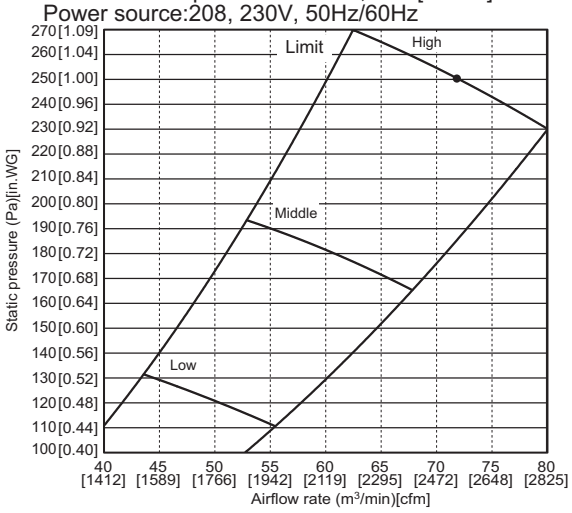

TPEFYP096MH140A

External static pressure :50Pa, 0.20[in.WG]
Power source:208, 230V, 50Hz/60Hz

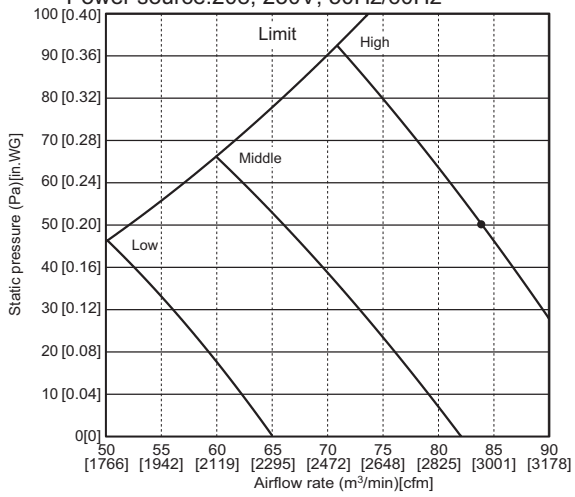

External static pressure :100Pa, 0.40[in.WG]
Power source:208, 230V, 50Hz/60Hz

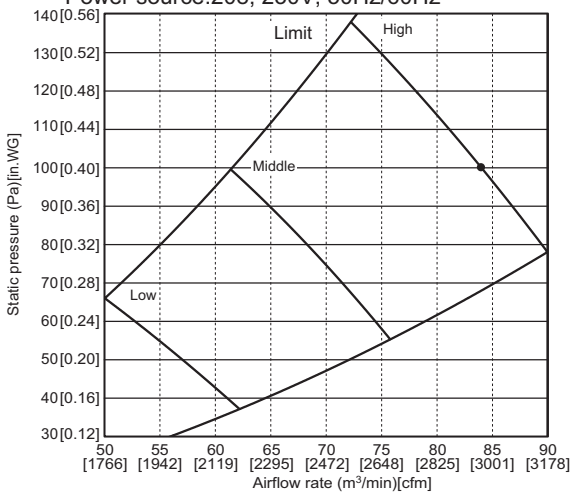

External static pressure :150Pa, 0.60[in.WG]
Power source:208, 230V, 50Hz/60Hz

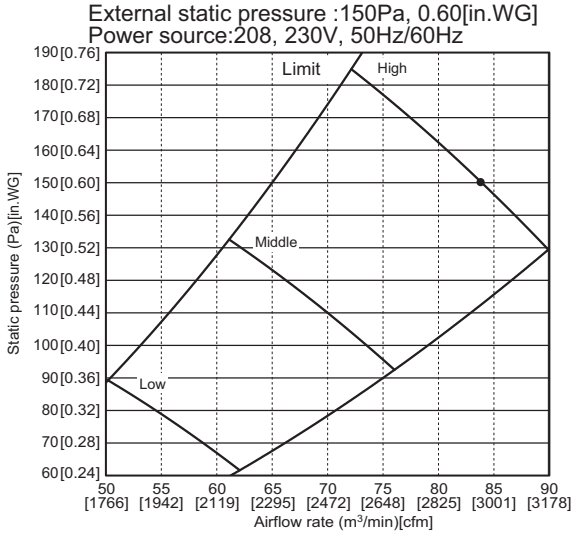

External static pressure :200Pa, 0.80[in.WG]
Power source:208, 230V, 50Hz/60Hz

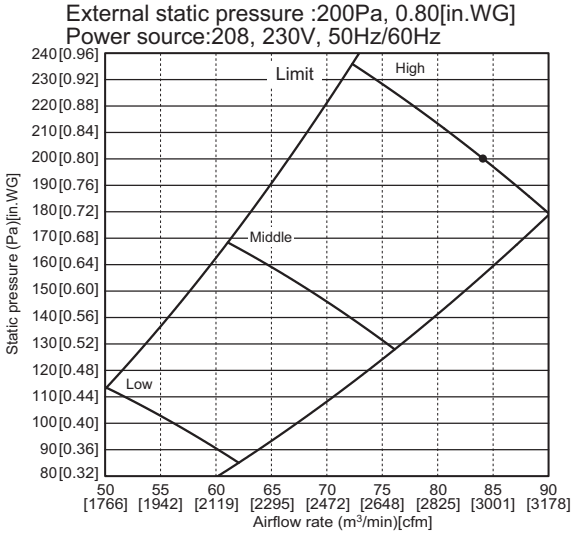

External static pressure :250Pa, 1.00[in.WG]
Power source:208, 230V, 50Hz/60Hz

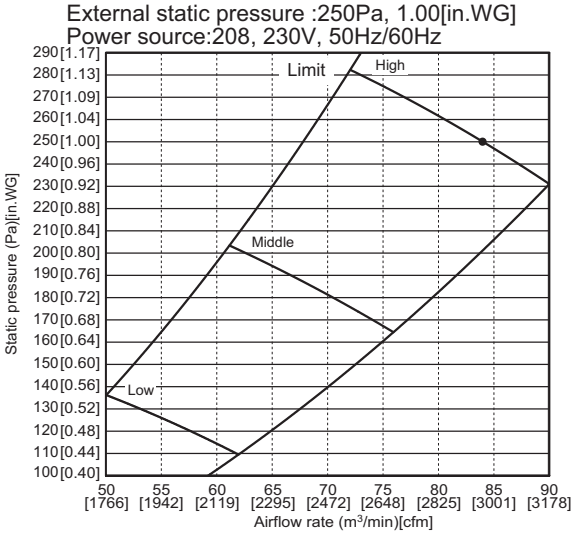

[5] Outlines and Dimensions

TPEFYP072, 096MH140A

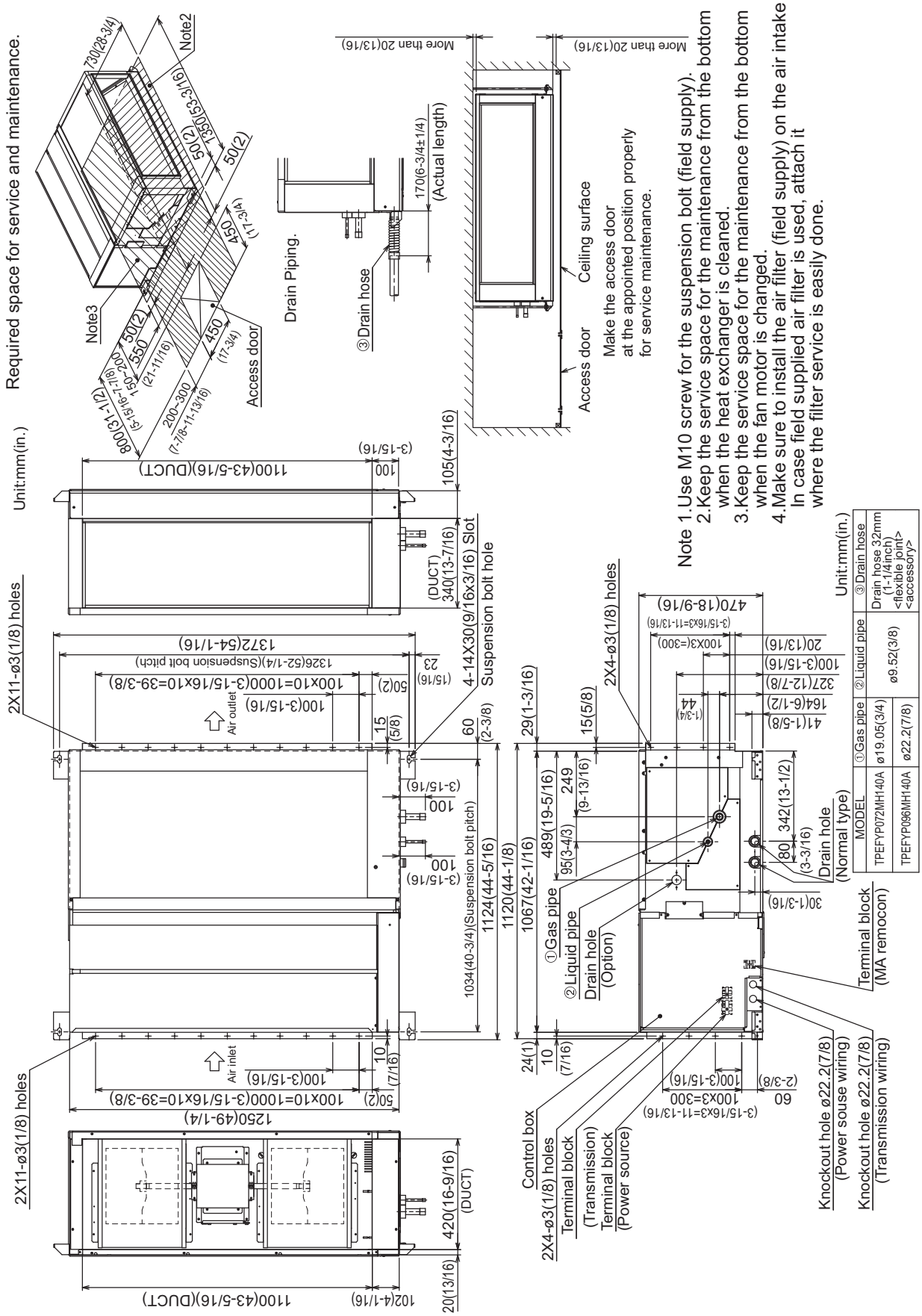

[6] Wiring Diagram

TPEFYP072, 096MH140A

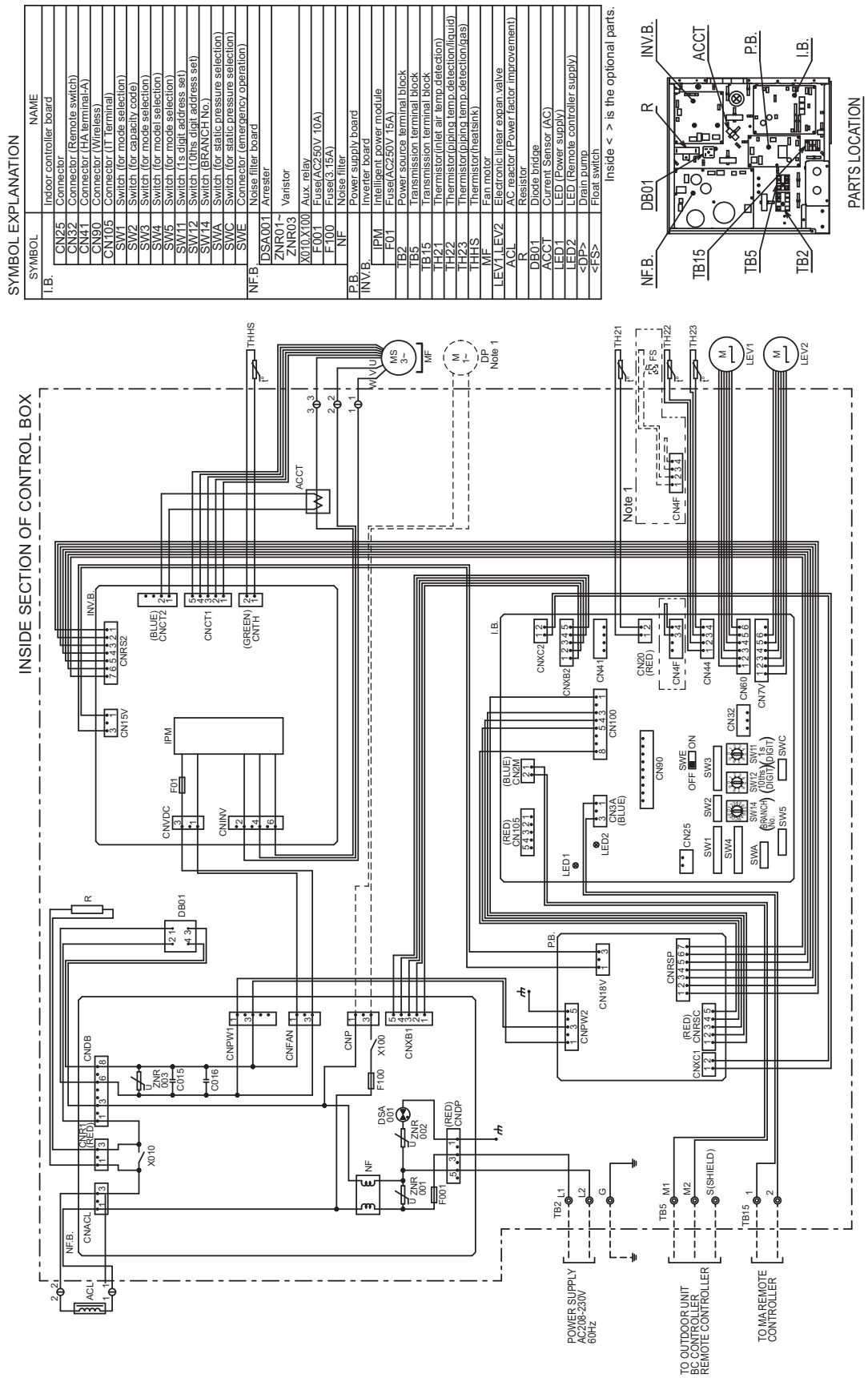

[7] Refrigerant system diagram

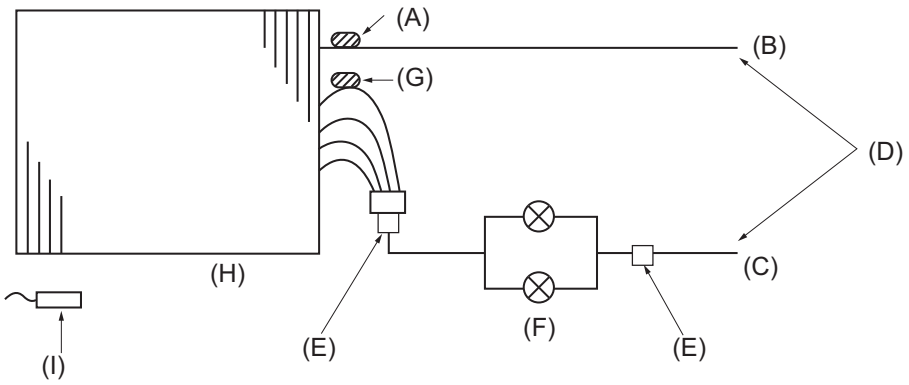

(A) Gas pipe thermistor TH23

(B) Gas pipe

(C) Liquid pipe

(D) Brazed connections

(E) Strainer (#100 mesh)

(F) Linear expansion valve

(G) Liquid pipe thermistor TH22

(H) Heat exchanger

(I) Room temperature thermistor TH21

[8] Troubleshooting

1. Check methods

1. Component and check points

(1) Thermistor

- Room temperature thermistor (TH21)
- Liquid pipe thermistor (TH22)
- Gas pipe thermistor (TH23)

Disconnect the connector and measure the resistance between terminals with a tester.
(Ambient temperature 50°F (10°C) - 86°F (30°C))

Normal	Abnormal
4.3kΩ - 9.6kΩ	Open or short

(Refer to the thermistor characteristic graph below.)

1) Thermistor characteristic graph

Low-temperature thermistor

- Room temperature thermistor (TH21)
- Liquid pipe thermistor (TH22)
- Gas pipe thermistor (TH23)

- Thermistor R_0 = 15 kΩ±3%
- Multiplier of B = 3480 kΩ±2%

$$Rt = 15 \exp \{ 3480(\frac{1}{273+t} - \frac{1}{273}) \}$$

32°F (0°C) 15kΩ
50°F (10°C) 9.6kΩ
68°F (20°C) 6.3kΩ
77°F (25°C) 5.2kΩ
86°F (30°C) 4.3kΩ
104°F (40°C) 3.0kΩ

(A) Temperature °F (°C)

(B) Resistance (kΩ)

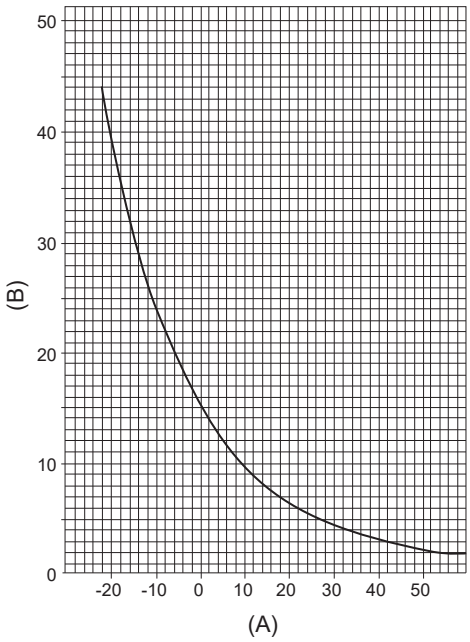

(2) Fan motor

Refer to the page on "DC fan motor (fan motor/INV board)."(page 48)

(3) Linear expansion valve

Refer to the page on "LEV". ([8] 4)(page 52)

2. Error Code Lists

Error Code	Preliminary error code	Error (preliminary) detail code	Error code definition		Searched unit: Outdoor unit	Indoor unit	LOSSNAY	Remote controller	Notes
0403	4300 4305	01 05 (Note)	Serial communication error		O	O			
0900	-	-	Test run				O		
1102	1202	-	Discharge temperature fault		O				
1301	-	-	Low pressure fault		O				
1302	1402	-	High pressure fault		O				
1500	1600	-	Refrigerant overcharge		O				
-	1605	-	Preliminary suction pressure fault		O				
2500	-	-	Drain sensor submergence			O			
2502	-	-	Drain pump fault			O			
2503	-	-	Drain sensor (Thd) fault			O	O		
2600	-	-	Water leakage				O		
2601	-	-	Water supply cutoff				O		
4102	4152	-	Open phase		O				
4106	-	-	Transmission power supply fault		O				
4109	-	-	Fan operation status detection error			O			
4115	-	-	Power supply signal sync error		O				
4116	-	-	RPM error/Motor error			O	O		
4220 4225 (Note)	4320 4325 (Note)	[108]	Abnormal bus voltage drop		O	O			
		[109]	Abnormal bus voltage rise		O	O			
		[111]	Logic error		O	O			
		[131]	Low bus voltage at startup		O				
4230 4235	4330 4335	-	Heatsink overheat protection		O	O			
4240	4340	-	Overload protection		O				
4250 4255 (Note)	4350 4355 (Note)	[101]	IPM error		O	O			
		[104]	Short-circuited IPM/Ground fault		O	O			
		[105]	Overcurrent error due to short-circuited motor		O	O			
		[106]	Instantaneous overcurrent (S/W detection)		O	O			
		[107]	Overcurrent (effective value) (S/W detection)		O	O			
		[121]	Position detection error at startup			O			
		[122]	Position detection error during operation			O			
4260	-	-	Heatsink overheat protection at startup		O				
5101	1202	-	Temperature sensor fault	Return air temperature (TH21)		O			
				OA processing unit inlet temperature (TH4)			O		

Error Code	Preliminary error code	Error (preliminary) detail code	Error code definition		Searched unit				Notes
					Outdoor unit	Indoor unit	LOSSNAY	Remote controller	
5102	1217	-	Temperature sensor fault	Indoor unit pipe temperature (TH22)		O			
				OA processing unit pipe temperature (TH2)			O		
				HIC bypass circuit outlet temperature (TH2)	O				
5103	1205	00	Temperature sensor fault	Indoor unit gas-side pipe temperature (TH23)		O			
				OA processing unit gas-side pipe temperature (TH3)			O		
				Pipe temperature at heat-exchanger outlet (TH3)	O				
5104	1202	-	Temperature sensor fault	OA processing unit intake air temperature (TH1)			O		
				Outside temperature (TH24)		O			Detectable only by the All-Fresh type indoor units
				Outdoor unit discharge temperature (TH4)	O				
5105	1204	-	Temperature sensor fault	Accumulator inlet temperature (TH5)	O				
5106	1216	-	Temperature sensor fault	HIC circuit outlet temperature (TH6)	O				
5107	1221	-	Temperature sensor fault	Outside temperature (TH7)	O				
5110	1214	01	Temperature sensor fault	Heatsink temperature (THHS)	O	O			
5201	-	-	High-pressure sensor fault (63HS1)		O				
5301 5305	4300 4305	[115]	ACCT sensor fault		O				
		[117]	ACCT sensor circuit fault		O	O			
		[119]	Open-circuited IPM/Loose ACCT connector		O	O			
		[120]	Faulty ACCT wiring		O				
5701	-	-	Loose float switch connector			O			
6201	-	-	Remote controller board fault (nonvolatile memory error)					O	
6202	-	-	Remote controller board fault (clock IC error)					O	
6600	-	-	Address overlap		O	O	O	O	
6601	-	-	Polarity setting error					O	
6602	-	-	Transmission processor hardware error		O	O	O	O	
6603	-	-	Transmission line bus busy error		O	O	O	O	
6606	-	-	Communication error between device and transmission processors		O	O	O	O	
6607	-	-	No ACK error		O	O	O	O	

Error Code	Preliminary error code	Error (preliminary) detail code	Error code definition	Searched unit				Notes
				Outdoor unit	Indoor unit	LOSSNAY	Remote controller	
6608	-	-	No response error	O	O	O	O	
6831	-	-	MA controller signal reception error (No signal reception)		O		O	
6832	-	-	MA remote controller signal transmission error (Synchronization error)		O		O	
6833	-	-	MA remote controller signal transmission error (Hardware error)		O		O	
6834	-	-	MA controller signal reception error (Start bit detection error)		O		O	
7100	-	-	Total capacity error	O				
7101	-	-	Capacity code setting error	O	O	O		
7102	-	-	Wrong number of connected units	O				
7105	-	-	Address setting error	O				
7106	-	-	Attribute setting error			O		
7110	-	-	Connection information signal transmission/reception error	O				
7111	-	-	Remote controller sensor fault		O	O		
7113	-	-	Function setting error	O				
7117	-	-	Model setting error	O				
7130	-	-	Incompatible unit combination	O				

Note

The last digit in the check error codes in the 4000's and 5000's and two-digit detail codes indicate if the codes apply to compressor inverter on fan inverter.

Example

Code 4225 (detail code 108): Bus voltage drop in the fan inverter system

Code 4230 : Heatsink overheat protection in the compressor inverter system

The last digit	Inverter system
0 or 1	Compressor inverter system
5	Fan inverter system

There are no preliminary error codes or detail codes for indoor units.

1. Error Code

0403

Serial communication error (Indoor unit)

2. Error definition and error detection method

Serial communication cannot be established between the Indoor controller board and the INV board.

3. Cause, check method and remedy

(1) Faulty wiring

Check the following wiring connections.

1) Between Indoor controller board and Power supply board

Indoor controller board	Power supply board
CN100	CNRSC

2) Between Power supply board and INV board

Power supply board	INV board
CNRSP	CNRS2

(2) INV board failure or Indoor controller board failure or Power supply board failure

If the error persists after a power reset, replace the INV board, the Indoor controller board, or the Power supply board.

Note

Refer to section [8] Troubleshooting, item 3. DC fan motor (fan motor/INV board) for error codes related to the inverter. (page 48)

---

1. Error Code

2500

Drain sensor submergence (Models with a drain sensor)

2. Error definition and error detection method

1) If an immersion of the drain sensor in the water is detected while the unit is in any mode other than the Cool/Dry mode and when the drain pump goes from OFF to ON, this condition is considered preliminary water leakage. While this error is being detected, humidifier output cannot be turned on.(Applicable to the units manufactured in or after October 2006)
2) If the immersion of the sensor in the water is detected four consecutive times at an hour interval, this is considered water leakage, and "2500" appears on the monitor.
3) Detection of water leakage is also performed while the unit is stopped.
4) Preliminary water leakage is cancelled when the following conditions are met:

- One hour after the preliminary water leakage was detected, it is not detected that the drain pump goes from OFF to ON.
- The operation mode is changed to Cool/Dry.
- The liquid pipe temperature minus the inlet temperature is -10°C [-18°F] or less.

3. Cause, check method and remedy

Cause	Check method and remedy
(1) Drain water drainage problem •Clogged drain pump •Clogged drain piping •Backflow of drain water from other units	Check for proper drainage.
(2) Adhesion of water drops to the drain sensor •Trickling of water along the lead wire •Rippling of drain water caused by filter clogging	1) Check for proper lead wire installation. 2) Check for clogged filter.
(3) Failure of the relay circuit for the solenoid valve	Replace the relay.
(4) Indoor controller board failure •Drain sensor circuit failure	If the above item checks out OK, replace the indoor controller board.

1. Error Code

2500

Drain sensor submergence (Models with a float switch)

2. Error definition and error detection method

1) If an immersion of the float switch in the water is detected while the unit is in any mode other than the Cool/Dry mode and when the drain pump goes from OFF to ON, this condition is considered preliminary water leakage. While this error is being detected, humidifier output cannot be turned on.
2) If the drain pump turns on within one hour after preliminary water leakage is detected and the above-mentioned condition is detected two consecutive times, water leakage error water leakage is detected, and "2500" appears on the monitor.
3) Detection of water leakage is also performed while the unit is stopped.
4) Preliminary water leakage is cancelled when the following conditions are met:

- One hour after the preliminary water leakage was detected, it is not detected that the drain pump goes from OFF to ON.
- The operation mode is changed to Cool/Dry.
- The liquid pipe temperature minus the inlet temperature is - 10°C [-18°F] or less.

3. Cause, check method and remedy

Cause	Check method and remedy
(1) Drain water drainage problem •Clogged drain pump •Clogged drain piping •Backflow of drain water from other units	Check for proper drainage.
(2) Stuck float switch Check for slime in the moving parts of the float switch.	Check for normal operation of the float switch.
(3) Float switch failure	Check the resistance with the float switch turned on and turned off.

<Reference>

Drain pump operation triggered by a submergence of the liquid level sensor
(except during the Cooing/Dry mode)

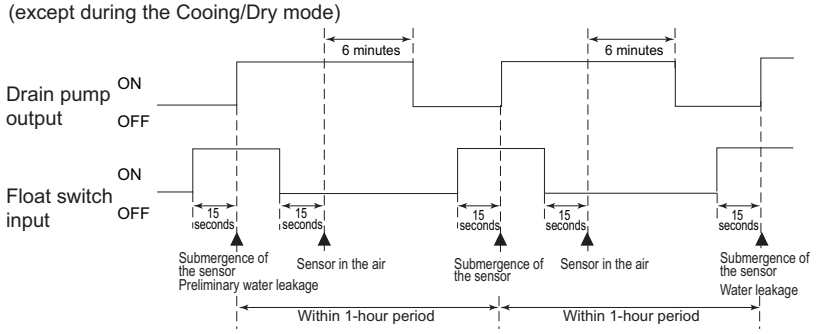

1. Error Code

2502

Drain pump fault (Models with a drain sensor)

2. Error definition and error detection method

1) Make the drain sensor thermistor self-heat. If the temperature rise is small, it is interpreted that the sensor is immersed in water. This condition is considered to be a preliminary error, and the unit goes into the 3-minute restart delay mode.
2) If another episode of the above condition is detected during the preliminary error, this is considered a drain pump error, and "2502" appears on the monitor.
3) This error is always detected while the drain pump is in operation.
4) The following criteria are met when the criteria for the forced stoppage of outdoor unit (system stoppage) are met.
   ∗"Liquid pipe temperature - inlet temperature ≤ -10°C [-18 °F] " has been detected for 30 minutes.
   ∗The immersion of drain sensor is detected 10 consecutive times.
   ∗The conditions that are listed under items 1) through 3) above are always met before the criteria for the forced stoppage of the outdoor unit.
5) The indoor unit that detected the conditions that are listed in item 4) above brings the outdoor unit in the same refrigerant circuit to an error stop (compressor operation prohibited), and the outdoor unit brings all the indoor units in the same refrigerant circuit that are in any mode other than Fan or Stop to an error stop. "2502" appears on the monitor of the units that came to an error stop.
6) Forced stoppage of the outdoor unit
   Detection timing: The error is detected whether the unit is in operation or stopped.
7) Ending criteria for the forced stoppage of outdoor unit
   Power reset the indoor unit that was identified as the error source and the outdoor unit that is connected to the same refrigerant circuit.
   Forced stoppage of the outdoor unit cannot be cancelled by stopping the unit via the remote controller.
   (Note) Items 1) - 3) and 4) - 7) are detected independently from each other.

Note

The address and attribute that appear on the remote controller are those of the indoor unit that caused the error.

3. Cause, check method and remedy

Cause	Check method and remedy
(1) Drain pump failure	Check for proper functioning of the drain pump.
(2) Drain water drainage problem ♦Clogged drain pump ♦Clogged drain piping	Check for proper drainage.
(3) Adhesion of water drops to the drain sensor ♦Trickling of water along the lead wire ♦Rippling of drain water caused by filter clogging	1) Check for proper lead wire installation. 2) Check for clogged filter.
(4) Indoor controller board failure ♦Drain pump drive circuit failure ♦Drain heater output circuit failure	If the above item checks out OK, replace the indoor controller board.
(5) Items (1) through (4) above and an indoor unit electronic valve closure failure (leaky valve) occurred simultaneously.	Check the solenoid valves on the indoor unit for leaks.

1. Error Code

2502

Drain pump fault (Models with a float switch)

2. Error definition and error detection method

1) The immersion of sensor tip in water is detected by the ON/OFF signal from the float switch.
   ∗Submergence of the sensor
   When it is detected that the float switch has been ON for 15 seconds, it is interpreted that the sensor tip is immersed in water.
   ∗Sensor in the air
   When it is detected that the float switch has been OFF for 15 seconds, it is interpreted that the sensor tip is not immersed in water.
2) If it is detected that the float switch has been ON for 3 minutes after the immersion of the sensor tip was detected, this is considered a drain pump failure, and "2502" appears on the monitor.
   ∗The total time it takes for this error to be detected is 3 minutes and 15 seconds, including the time it takes for the first immersion of the sensor tip to be detected.
3) Detection of drain pump failure is performed while the unit is stopped.
4) The following criteria are met when the criteria for the forced stoppage of outdoor unit (system stoppage) are met.
   ∗"Liquid pipe temperature - inlet temperature ≦ - 10°C [-18°F] " has been detected for 30 minutes.
   ∗It is detected by the float switch that the sensor tip has been immersed in water for 15 minutes or more.
   ∗The conditions that are listed under items 1) through 3) above are always met before the criteria for the forced stoppage of the outdoor unit.
5) The indoor unit that detected the conditions that are listed in item 4) above brings the outdoor unit in the same refrigerant circuit to an error stop (compressor operation prohibited), and the outdoor unit brings all the indoor units in the same refrigerant circuit that are in any mode other than Fan or Stop to an error stop.
6) Forced stoppage of the outdoor unit
   Detection timing: The error is detected whether the unit is in operation or stopped.
   This error is detected whether the unit is in operation or stopped.
7) Ending criteria for the forced stoppage of outdoor unit
   Power reset the indoor unit that was identified as the error source and the outdoor unit that is connected to the same refrigerant circuit.
   Forced stoppage of the outdoor unit cannot be cancelled by stopping the unit via the remote controller.
   (Note) Items 1) - 3) and 4) - 7) are detected independently from each other.

Note

The address and attribute that appear on the remote controller are those of the indoor unit that caused the error.

3. Cause, check method and remedy

Cause		Check method and remedy
(1)	Drain pump failure	Check for proper functioning of the drain pump mechanism
(2)	Drain water drainage problem •Clogged drain pump •Clogged drain piping	Check for proper drainage.
(3)	Stuck float switch Check for slime in the moving parts of the float switch.	Check for normal operation of the float switch.
(4)	Float switch failure	Check the resistance with the float switch turned on and turned off.
(5)	Indoor controller board failure •Drain pump drive circuit failure •Float switch input circuit failure	Replace indoor controller board.
(6)	Items (1) through (5) above and an indoor unit electronic valve closure failure (leaky valve) occurred simultaneously.	Check the solenoid valves on the indoor unit for leaks.

1. **Error Code**

2503

Drain sensor (Thd) fault

2. **Error definition and error detection method**

- If the open or short circuit of the thermistor has been detected for 30 seconds, this condition is considered to be a preliminary error, and the unit goes into the 3-minute restart delay mode.
- If another episode of the above condition is detected during the preliminary error, this is considered a drain sensor error.(If the short or open circuit of the thermistor is no longer detected, normal operation will be restored in 3 minutes.)
- This error is detected when one of the following conditions are met.
  - ∗During Cool/Dry operation
  - ∗Liquid pipe temperature minus inlet temperature is equal to or smaller than - 10°C [-18°F] (except during the defrost cycle)
  - ∗When the liquid temperature thermistor or suction temperature thermistor or short or open circuited.
  - ∗Drain pump is in operation.
  - ∗One hour has elapsed since the drain sensor went off.

    Short: 90°C [194 °F] or above
    Open: - 20°C [-4 °F] or below

3. **Cause, check method and remedy**

Cause	Check method and remedy
(1) Faulty connector (CN31) insertion.	1) Check for connector connection failure. Reinsert the connector, restart the operation, and check for proper operation.
(2) Broken or semi-broken thermistor wire	2) Check for a broken thermistor wire.
(3) Thermistor failure	3) Check the resistance of the thermistor. 0°C[32 °F]:6.0kΩ 10°C[50 °F]:3.9kΩ 20°C[68°F]:2.6kΩ 30°C[86°F]:1.8kΩ 40°C[104 °F]:1.3kΩ
(4) Indoor controller board (error detection circuit) failure	4) Replace the indoor controller board if the problem recurs when the unit is operated with the No.-1 and No.-2 pins on the drain sensor connector (CN31) being short-circuited. If the above item checks out OK, there are no problems with the drain sensor. Turn off the power and turn it back on.

1. **Error Code**

4109

Indoor unit fan operation error

2. **Error definition and error detection method**

1) Connector CN28 has remained open-circuited for 100 consecutive secondsduring operation.

3. **Cause, check method and remedy**

Cause	Check method and remedy
(1) Auxiliary relay (X13) fault	The coil or the wiring of the auxiliary relay connected to CN28 is faulty.
(2) Connector (CN28) is disconnected.	Check the connector for proper connection.
(3) Blown fuse	Check the fuse on the control circuit board.
(4) Motor error (thermistor error inside the motor)	Check the unit fan for proper operation in the test run mode. If no problems are found with items 1 through 3 above and the fan does not operate, replace the motor.

1. Error Code

4116

RPM error/Motor error

2. Error definition and error detection method

♦LOSSNAY

∗The motor keep running even if the power is OFF.
∗The thermal overload relay is ON. (Only for the three-phase model)

♦Indoor unit

If detected less than 180rpm or more than 2000rpm, the indoor unit will restart and keep running for 3 minutes.If detected again, the display will appear.

3. Cause, check method and remedy

Cause	Check method and remedy
(1) Board failure	Replace the board.
(2) Motor malfunction (3) Solenoid switch malfunction	Check for the motor and the solenoid switch.

1. Error Code

4225

Abnormal bus voltage drop (Indoor unit)

2. Error definition and error detection method

If Vdc 130V or less is detected during Inverter operation. (S/W detection)

3. Cause, check method and remedy

(1) Power supply environment

Check whether the unit makes an instantaneous stop when the detection result is abnormal or a power failure occurs.
Check whether the power voltage is 198V or above across all phases.

(2) Voltage drop detected

Check the voltage at CNVDC (between pins 1 and 3(+)) on the INV board while the inverter is stopped and if it is less than 220V, check the following items.

1) Check the wiring between TB2 and NF board, NF board and ACL, NF board and inrush current resistor, NF board and DB01, NF board and INV board, NF board and indoor controller board.
2) Check the inrush current resistance.
   Measure the interphase resistance of the resistor (R). 22 Ω ± 10%
3) Check ACL for broken wires.
   Check that the resistance between pins 1 and 3 (housing side) of the CNACL connector is not infinite (∞).
4) Check the diode bridge (DB01) for problem.
   Refer to section 5. "Troubleshooting the diode bridge".(page 51)
5) If no problems were found with items 1) through 4) above, replace the NF board.

(3) Indoor controller board failure

Confirm that DC12V is applied to the connector CNXB2 (between pins 4 and 5(+)) on the Indoor controller board while the inverter is operating. If not, replace the Indoor controller board.

(4) NF board failure

If the unit stops within 10 seconds after resuming operation and the same error is detected, replace the NF board.

(5) INV board failure

If no problems were found with items (1) through (4) above, replace the INV board.

Note

Refer to section [8] Troubleshooting, item 3. DC fan motor (fan motor/INV board) for error codes related to the inverter. (page 48)

1. **Error Code**

4225

Abnormal bus voltage rise (Indoor unit)

2. **Error definition and error detection method**

If Vdc ≥ 425V is detected during inverter operation.

3. **Cause, check method and remedy**

(1) Different voltage connection

Check the power supply voltage on the power supply terminal block (TB2).

(2) INV board failure

If the problem recurs, replace the INV board.

Note

Refer to section [8] Troubleshooting, item 3. DC fan motor (fan motor/INV board) for error codes related to the inverter. (page 48)

---

1. **Error Code**

4225

Logic error (Indoor unit)

2. **Error definition and error detection method**

H/W error
If only the H/W error logic circuit operates, and no identifiable error is detected.

3. **Cause, Check method and remedy**

Cause	Check method and remedy
(1) External noise	If the problem recurs when the unit is put into operation, replace the INV board.
(2) INV board failure	

Note

Refer to section [8] Troubleshooting, item 3. DC fan motor (fan motor/INV board) for error codes related to the inverter. (page 48)

---

1. **Error Code**

4235

Heatsink overheat protection (Indoor unit)

2. **Error definition and error detection method**

When the heat sink temperature (THHS) remains at or above 85°C [185°F] is detected.

3. **Cause, check method and remedy**

Cause	Check method and remedy
(1) Air passage blockage	Check that the heat sink cooling air passage is not blocked
(2) Fan motor error	Check the fan motor for proper operation (sound, vibration, and rotation). If any problems were found, refer to [8] 3.2[3][4].(page 50)
(3) THHS failure	If the problem persists after resuming operation, replace the THHS sensor.
(4) INV board fault	If no problems were found with items (1) through (3) and the same error is detected after resuming operation, replace the INV board.

Note

Refer to section [8] Troubleshooting, item 3. DC fan motor (fan motor/INV board) for error codes related to the inverter. (page 48)

1. **Error Code**

4255

IPM error (Indoor unit)

2. **Error definition and error detection method**

IPM error signal is detected.

3. **Cause, check method and remedy**

Cause	Check method and remedy
(1) Power supply environment	Check the power supply voltage. Check whether the power voltage is 176V or above across all phases.
(2) Static pressure setting error	Check that the static pressure setting and the design static pressure are correct.
(3) Inverter failure or fan motor error	1) Refer to [8] 3.2.[1].(page 49) 2) Refer to [8] 3.2.[2].(page 49) 3) Refer to [8] 3.2.[3].(page 50) 4) Refer to [8] 3.2.[4].(page 50)

Note

Refer to section [8] Troubleshooting, item 3. DC fan motor (fan motor/INV board) for error codes related to the inverter. (page 48)

1. **Error Code**

4255

Instantaneous overcurrent (Indoor unit)
Overcurrent (Indoor unit)

2. **Error definition and error detection method**

Overcurrent 18 Arms and above is detected by the current sensor.

3. **Cause, check method and remedy**

Cause	Check method and remedy
(1) Power supply environment	Check the power supply voltage. Check whether the power voltage is 176V or above across all phases.
(2) Static pressure setting error	Check that the static pressure setting and the design static pressure are correct.
(3) Inverter failure or fan motor error	1) Refer to [8] 3.2.[1].(page 49) 2) Refer to [8] 3.2.[2].(page 49) 3) Refer to [8] 3.2.[3].(page 50) 4) Refer to [8] 3.2.[4].(page 50)

Note

Refer to section [8] Troubleshooting, item 3. DC fan motor (fan motor/INV board) for error codes related to the inverter. (page 48)

1. **Error Code**

4255

Short-circuited IPM/Ground fault (Indoor unit)

2. **Error definition and error detection method**

When IPM/IGBT short damage or grounding on the load side is detected just before starting the inverter.

3. **Cause, check method and remedy**

Cause	Check method and remedy
(1) Ground fault of the fan motor	Refer to [8] 3.2.[4].(page 50)
(2) Inverter failure	1) Refer to [8] 3.2.[1].(page 49) 2) Refer to [8] 3.2.[2].(page 49)

Note

Refer to section [8] Troubleshooting, item 3. DC fan motor (fan motor/INV board) for error codes related to the inverter. (page 48)

1. **Error Code**

4255

Overcurrent error due to short-circuited motor (Indoor unit)

2. **Error definition and error detection method**

When a short is detected on the load side just before starting the inverter operation.

3. **Cause, Check method and remedy**

Cause	Check method and remedy
(1) Short-circuited fan motor coil or inverter failure	1) Refer to [8] 3.2.[1].(page 49) 2) Refer to [8] 3.2.[2].(page 49) 3) Refer to [8] 3.2.[3].(page 50)
(2) Output wiring	Check for a short circuit

Note

Refer to section [8] Troubleshooting, item 3. DC fan motor (fan motor/INV board) for error codes related to the inverter. (page 48)

1. **Error Code**

4255

Position detection error at startup (Indoor unit)

2. **Error definition and error detection method**

Position error is detected by the hall sensor at inverter startup.

3. **Cause, Check method and remedy**

Cause	Check method and remedy
(1) Loose connector	Check the CNCT1 and CNINV connectors on the INV board for proper connection.
(2) Inverter failure or fan motor error	1) Refer to [8] 3.2.[2].(page 49) 2) Refer to [8] 3.2.[3].(page 50)

Note

Refer to section [8] Troubleshooting, item 3. DC fan motor (fan motor/INV board) for error codes related to the inverter. (page 48)

1. **Error Code**

4255

Position detection error during operation (Indoor unit)

2. **Error definition and error detection method**

Position error is detected by the hall sensor during operation.

3. **Cause, Check method and remedy**

Cause	Check method and remedy
(1) Loose connector	Check the CNCT1 and CNINV connectors on the INV board for proper connection.
(2) Inverter failure or fan motor error	1) Refer to [8] 3.2.[2].(page 49) 2) Refer to [8] 3.2.[3].(page 50)

Note

Refer to section [8] Troubleshooting, item 3. DC fan motor (fan motor/INV board) for error codes related to the inverter. (page 48)

1. Error Code

5101

Return air temperature sensor (TH21) fault (Indoor unit)
Return air temperature sensor (TH4) fault (OA processing unit)

5102

Pipe temperature sensor (TH22) fault (Indoor unit)
Pipe temperature sensor (TH2) fault (OA processing unit)

5103

Gas-side pipe temperature sensor (TH23) fault (Indoor unit)
Gas-side pipe temperature sensor (TH3) fault (OA processing unit)

5104

Intake air temperature sensor (TH1) fault (OA processing unit)
Intake air temperature sensor (TH24) fault (All-fresh (100% outdoor air) type indoor unit)

2. Error definition and error detection method

- If a short or an open is detected during thermostat ON, the outdoor unit turns to anti-restart mode for 3 minutes. When the error is not restored after 3 minutes (if restored, the outdoor unit runs normally), the outdoor unit makes an error stop.
  Short: detectable at 90°C [194°F] or higher
  Open: detectable at -40°C [-40°F] or lower
- Sensor error at gas-side cannot be detected under the following conditions.
  - During heating operation
  - During cooling operation for 3 minutes after the compressor turns on.

3. Cause, check method and remedy

Cause	Check method and remedy
(1) Thermistor failure (2) Connector contact failure (3) Disconnected wire or partial disconnected thermistor wire (4) Unattached thermistor or contact failure	Check the thermistor resistor. 0°C [32°F]: 15 kohm 10°C [50°F]: 9.7 kohm 20°C [68°F] : 6.4 kohm 30°C [86°F] : 4.3 kohm 40°C [104°F] : 3.1 kohm
(5) Indoor board (detection circuit) failure	Check the connector contact. When no fault is found, the indoor board is a failure.

1. **Error Code**

5110

Heatsink temperature sensor (THHS) fault (Indoor unit)

2. **Error definition and error detection method**

When a short or an open of THHS is detected just before or during the inverter operation.

3. **Cause, check method and remedy**

Cause	Check method and remedy
(1) Loose connector	Check the CNTH on the INV board for proper connection.
(2) THHS sensor fault	If the problem persists after resuming operation, replace the THHS sensor.
(3) INV board failure	If no problems were found with items (1) and (2) above and the problem persists after resuming operation, replace the INV board.

Note

Refer to section [8] Troubleshooting, item 3. DC fan motor (fan motor/INV board) for error codes related to the inverter. (page 48)

1. **Error Code**

5305

ACCT sensor circuit fault (Indoor unit)

2. **Error definition and error detection method**

When abnormal value is detected by the ACCT detection circuit immediately before the inverter starts

3. **Cause, check method and remedy**

Cause	Check method and remedy
(1) INV board failure	Refer to [8] 3.2.[1].(page 49)
(2) Fan motor error	Refer to [8] 3.2.[4].(page 50)

Note

Refer to section [8] Troubleshooting, item 3. DC fan motor (fan motor/INV board) for error codes related to the inverter. (page 48)

1. **Error Code**

5305

Open-circuited IPM/Loose ACCT connector (Indoor unit)

2. **Error definition and error detection method**

ACCT sensor detected that not enough current is available.

3. **Cause, check method and remedy**

Cause	Check method and remedy
(1) Disconnected ACCT sensor	Check CNCT2 on the INV board for proper connection.
(2) ACCT sensor fault	Disconnect the CNCT2 connector, and check the resistance between the terminals. Refer to [8] 3.4.(page 51)
(3) Inverter failure or fan motor error	1) Refer to [8] 3.2.[2].(page 49) 2) Refer to [8] 3.2.[4].(page 50) 3) If no problems were found with items 1) and 2) above and the problem persists after resuming operation, replace the INV board and the ACCT sensor. 4) If the problem persists after taking step 3) above, replace the fan motor.

Note

Refer to section [8] Troubleshooting, item 3. DC fan motor (fan motor/INV board) for error codes related to the inverter. (page 48)

1. **Error Code**

5701

Loose float switch connector

2. **Error definition and error detection method**

Detection of the disconnected float switch (open-phase condition) during operation

3. **Cause, check method and remedy**

(1) CN4F disconnection or contact failure

Check for disconnection of the connector (CN4F) on the indoor controller board.

1. **Error Code**

6600

Address overlap

2. **Error definition and error detection method**

An error in which signals from more than one indoor units with the same address are received

Note

The address and attribute that appear on the remote controller indicate the controller that detected the error.

3. **Cause, check method and remedy**

Cause	Check method and remedy
(1) Two or more of the following have the same address: Outdoor units, indoor units, LOSSNAY units, controllers such as ME remote controllers. <Example> 6600 "01" appears on the remote controller Unit #01 detected the error. Two or more units in the system have 01 as their address. (2) Signals are distorted by the noise on the transmission line.	♦Find the unit that has the same address as that of the error source.**Once the unit is found, correct the address. Then, turn off the outdoor units, indoor units, and LOSSNAY units, keep them all turned off for at least five minutes, and turn them back on.** ♦When air conditioning units are operating normally despite the address overlap error Check the transmission wave shape and noise on the transmission line. Refer to the service handbook that came with the outdoor unit.

1. Error Code

6602

Transmission processor hardware error

2. Error definition and error detection method

Although "0" was surely transmitted by the transmission processor, "1" is displayed on the transmission line.

Note

The address/attribute appeared on the display on the remote controller indicates the controller where an error occurred.

3. Cause

1) When the wiring work of or the polarity of either the indoor or outdoor transmission line is performed or is changed while the power is on, the transmitted data will collide, the wave shape will be changed, and an error will be detected.
2) Grounding fault of the transmission line
3) When grouping the indoor units that are connected to different outdoor units, the male power supply connectors on the multiple outdoor units are connected to the female power supply switch connector (CN40).
4) When the power supply unit for transmission lines is used in the system connected with MELANS, the male power supply connector is connected to the female power supply switch connector (CN40) on the outdoor unit.
5) Controller failure of the source of the error
6) When the transmission data is changed due to the noise on the transmission line
7) Voltage is not applied on the transmission line for centralized control (in case of grouped indoor units connected to different outdoor units or in case of the system connected with MELANS)

4. Check method and remedy

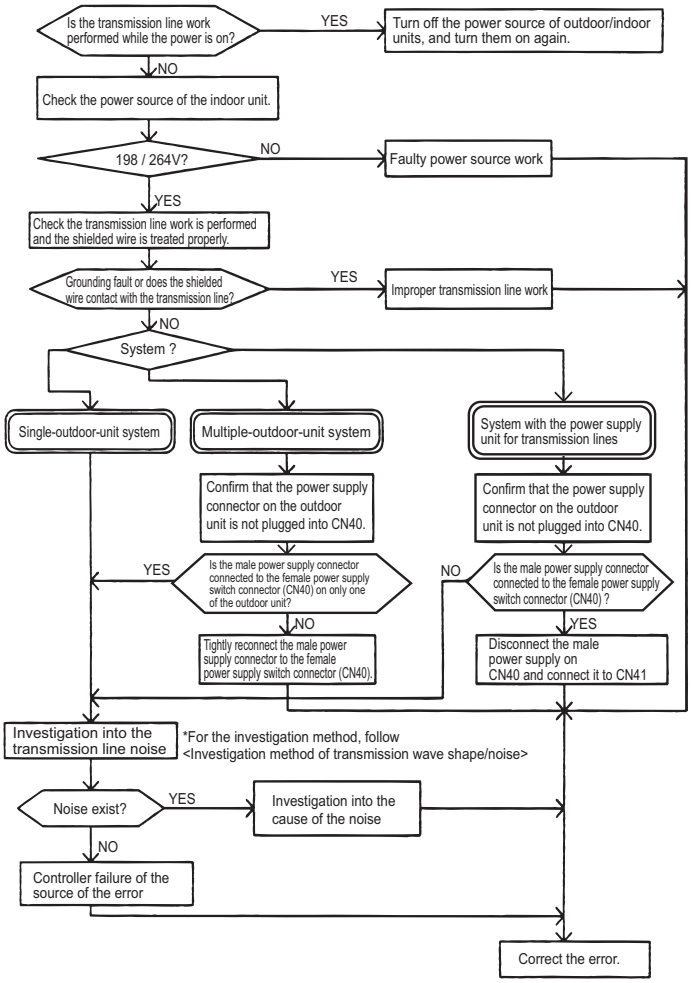

1. **Error Code**

6603

Transmission line bus busy error

2. **Error definition and error detection method**

- Generated error when the command cannot be transmitted for 4-10 minutes in a row due to bus-busy
- Generated error when the command cannot be transmitted to the transmission line for 4-10 minutes in a row due to noise

Note

The address/attribute appeared on the display on the remote controller indicates the controller where an error occurred.

3. **Cause, check method and remedy**

Cause	Check method and remedy
(1) The transmission processor cannot be transmitted as the short-wavelength voltage like noise exists consecutively on the transmission line.	Check the transmission wave shape and noise on the transmission line. Refer to the service handbook that came with the outdoor unit. -> No noise indicates that the error source controller is a failure. -> If noise exists, investigate the noise.
(2) Error source controller failure	

1. **Error Code**

6606

Communication error between device and transmission processors

2. **Error definition and error detection method**

Communication error between the main microcomputer on the indoor unit board and the microcomputer for transmission

Note

The address/attribute appeared on the display on the remote controller indicates the controller where an error occurred.

3. **Cause, check method and remedy**

Cause	Check method and remedy
(1) Data is not properly transmitted due to accidental erroneous operation of the controller of the error source.	Turn off the power source of the outdoor and the indoor units.(When the power source is turned off separately, the microcomputer will not be reset, and the error will not be corrected.) -> If the same error occurs, the error source controller is a failure.
(2) Error source controller failure	

1. Error Code

6607

No ACK error

2. Error definition and error detection method

The error is detected when no acknowledgement (ACK signal) is received after the transmission. (eg. When the data is transmitted six times in a row with 30 seconds interval, the error is detected on the transmission side.)

Note

The address/attribute appeared on the display on the remote controller indicates the controller which did not provide the response (ACK).

3. System configuration

(1) System with one outdoor unit

Error source address	Error display	Detection method	Cause	Check method and remedy
Outdoor unit (OC)	ME remote controller (RC) MA remote controller (MA)	No acknowledgement (ACK) at IC transmission to OC	(1) Contact failure of transmission line of OC or IC (2) Decrease of transmission line voltage/signal by exceeding acceptable range of transmission wiring. Farthest:200 m [656ft] or less Remote controller wiring: 10m [32ft] or less (3) Erroneous sizing of transmission line (Not within the range below). Wire diameter: 1.25mm^2 [AWG16] or more (4) Indoor unit control board failure	Turn off the power source of the outdoor unit, and turn it on again. If the error is accidental, it will run normally. If not, check the causes (1) - (4).
Indoor unit (IC)	ME remote controller (RC) MA remote controller (MA)	No acknowledgement (ACK) at RC transmission to IC	(1) When IC unit address is changed or modified during operation. (2) Faulty or disconnected IC transmission wiring (3) Disconnected IC connector (CN2M) (4) Indoor unit controller failure (5) ME remote controller failure	Turn off the outdoor/indoor units for 5 or more minutes, and turn them on again. If the error is accidental, they will run normally. If not, check the causes (1) - (5).
LOSSNAY (LC)	ME remote controller (RC) MA remote controller (MA)	No acknowledgement (ACK) at IC transmission to LC	(1) The power source of LOSSNAY has been shut off. (2) When the address of LOSSNAY is changed in the middle of the operation (3) Faulty or disconnected transmission wiring of LOSSNAY (4) Disconnected connector (CN1) on LOSSNAY (5) Controller failure of LOSSNAY	Turn off the power source of LOSSNAY and turn it on again. If the error is accidental, it will run normally. If not, check the causes (1) - (5).
ME remote controller (RC)	ME remote controller (RC) MA remote controller (MA)	No acknowledgement (ACK) at IC transmission to RC	(1) Faulty transmission wiring at IC unit side. (2) Faulty wiring of the transmission line for ME remote controller (3) When the address of ME remote controller is changed in the middle of the operation (4) ME remote controller failure	Turn off the power source of the outdoor unit for 5 minutes or more, and turn it on again. If the error is accidental, it will run normally. If not, check the causes (1) - (4).

1. Error Code

6607

No ACK error

2. Error definition and error detection method

The error is detected when no acknowledgement (ACK signal) is received after the transmission. (eg. When the data is transmitted six times in a row with 30 seconds interval, the error is detected on the transmission side.)

Note

The address/attribute appeared on the display on the remote controller indicates the controller which did not provide the response (ACK).

3. System configuration

(2) Grouping of units in a system with multiple outdoor units

Error source address	Error display	Detection method	Cause	Check method and remedy
Outdoor unit (OC)	ME remote controller (RC) MA remote controller (MA)	No acknowledgement (ACK) at IC transmission to OC	Same cause as that for system with one outdoor unit	Same remedy as that for system with one outdoor unit
Indoor unit (IC)	ME remote controller (RC) MA remote controller (MA)	No acknowledgement (ACK) at RC transmission to IC	(1) Same causes as (1) - (5) for system with one outdoor unit (2) Disconnection or short circuit of the transmission line for the outdoor unit on the terminal block for centralized control line connection (TB7) (3) When multiple outdoor units are connected and the power source of one of the outdoor units has been shut off. (4) The male power supply connector of the outdoor unit is not connected to the female power supply switch connector (CN40). (5) The male power supply connectors on 2 or more outdoor units are connected to the female power supply switch connector (CN40) for centralized control. If an error occurs, after the unit runs normally once, the following causes may be considered. •Total capacity error (7100) •Capacity code error (7101) •Error in the number of connected units (7102) •Address setting error (7105)	1) Turn off the power sources of the outdoor and indoor units for 5 or more minutes, and turn them on again. If the error is accidental, the will run normally.If not, check the cause 2). 2) Check the causes of (1) - (5). If the cause is found, correct it. If no cause is found, check 3). 3) Check the LED displays for troubleshooting on other remote controllers whether an error occurs. If an error is found, -> If an error is found, check the check code definition, and correct the error. If no error is found, -> Indoor unit board failure

1. Error Code

6607

No ACK error

2. Error definition and error detection method

The error is detected when no acknowledgement (ACK signal) is received after the transmission. (eg. When the data is transmitted six times in a row with 30 seconds interval, the error is detected on the transmission side.)

Note

The address/attribute appeared on the display on the remote controller indicates the controller which did not provide the response (ACK).

3. System configuration

(2) Grouping of units in a system with multiple outdoor units

Error source address	Error display	Detection method	Cause	Check method and remedy
LOSS-NAY (LC)	ME remote controller (RC) MA remote controller (MA)	No acknowledgement (ACK) at IC transmission to LC	(1) Factors (1) through (5) in the "Factors in system with one outdoor unit" (When performing an interlocked operation of the LOSSNAY unit and the indoor units that are connected to different outdoor units.) (2) Disconnection or short circuit of the transmission line for the outdoor unit on the terminal block for centralized control line connection (TB7) (3) When multiple outdoor units are connected and the power source of one of the outdoor units has been shut off. (4) The male power supply connector of the outdoor unit is not connected to the female power supply switch connector (CN40). (5) The male power supply connectors on 2 or more outdoor units are connected to the female power supply switch connector (CN40) for centralized control. If an error occurs, after the unit runs normally once, the following causes may be considered. •Total capacity error (7100) •Capacity code error (7101) •Error in the number of connected units (7102) •Address setting error (7105)	1) Turn off the power source of LOSSNAY for 5 or more minutes, and turn it on again. If the error is accidental, it will run normally.If not, check the cause 2). 2) Check the causes of (1) - (5). If the cause is found, correct it. If no cause is found, check 3). 3) Same cause as that for indoor unit described in 3)

1. **Error Code**

6607

No ACK error

2. **Error definition and error detection method**

The error is detected when no acknowledgement (ACK signal) is received after the transmission. (eg. When the data is transmitted six times in a row with 30 seconds interval, the error is detected on the transmission side.)

Note

The address/attribute appeared on the display on the remote controller indicates the controller which did not provide the response (ACK).

3. **System configuration**

(2) Grouping of units in a system with multiple outdoor units

Error source address	Error display	Detection method	Cause	Check method and remedy
ME remote controller (RC)	ME remote controller (RC) MA remote controller (MA)	No acknowledgement (ACK) at IC transmission to RC	(1) Same causes as (1) - (4) for system with one outdoor unit (2) Disconnection or short circuit of the transmission line for the outdoor unit on the terminal block for centralized control line connection (TB7) (3) When multiple outdoor units are connected and the power source of one of the outdoor units has been shut off. (4) The male power supply connector of the outdoor unit is not connected to the female power supply switch connector (CN40). (5) The male power supply connectors on 2 or more outdoor units are connected to the female power supply switch connector (CN40) for centralized control. If the problem recurs after normal operation is restored, the problem is caused by one of the following factors: •Total capacity error (7100) •Capacity code setting error (7101) •Error in the number of connected units (7102) •Address setting error (7105)	1) Turn off the power source of LOSSNAY for 5 or more minutes, and turn it on again. If the error is accidental, it will run normally.If not, check the cause 2). 2) Check the causes of (1) - (5). If the cause is found, correct it. If no cause is found, check 3). 3) Same cause as that for indoor unit described in 3)

1. Error Code

6607

No ACK error

2. Error definition and error detection method

The error is detected when no acknowledgement (ACK signal) is received after the transmission. (eg. When the data is transmitted six times in a row with 30 seconds interval, the error is detected on the transmission side.)

Note

The address/attribute appeared on the display on the remote controller indicates the controller which did not provide the response (ACK).

3. System configuration

(3) System connected to the system controllers (MELANS)

Error source address	Error display	Detection method	Cause	Check method and remedy
Outdoor unit (OC)	ME remote controller (RC) System controller (SC) MA remote controller (MA)	No acknowledgement (ACK) at IC transmission to OC	Same cause as that for system with one outdoor unit	Same remedy as that for system with one outdoor unit
Indoor unit (IC)	ME remote controller (RC) MA remote controller (MA)	No acknowledgement (ACK) at RC transmission to IC	Same as grouping of units in a system with multiple outdoor units	Same remedy as that for grouping of units in a system with multiple outdoor units
	System controller (SC)	No acknowledgement (ACK) at SC transmission to IC	1. Error occurrence on some IC (1) Same cause as that for system with one outdoor unit	Same remedy as that for system with one outdoor unit
			2. Error occurrence on all IC in the system with one outdoor unit (1) Total capacity error (7100) (2) Capacity code error (7101) (3) Error in the number of connected units (7102) (4) Address setting error (7105) (5) Disconnection or short circuit of the transmission line for the outdoor unit on the terminal block for centralized control line connection (TB7) (6) Turn off the power source of the outdoor unit (7) Malfunction of electrical system for the outdoor unit	1) Check the LED display for troubleshooting on the outdoor unit. •If an error is found, check the check code definition, and correct the error. •If no error is found, check 2). 2) Check (5) - (7) on the left.
			3. Error occurrence on all IC (1) Same causes as (1) - (7) described in 2. (2) The male power supply connectors on 2 or more outdoor units are connected to the female power supply switch connector (CN40) for the transmission line for centralized control. (3) Disconnection or shutdown of the power source of the power supply unit for transmission line (4) System controller (MELANS) malfunction	Check voltage of the transmission line for centralized control. •20V or more: Check (1) and (2) on the left. •Less than 20V: Check (3) on the left.

1. **Error Code**

6607

No ACK error

2. **Error definition and error detection method**

The error is detected when no acknowledgement (ACK signal) is received after the transmission. (eg. When the data is transmitted six times in a row with 30 seconds interval, the error is detected on the transmission side.)

Note

The address/attribute appeared on the display on the remote controller indicates the controller which did not provide the response (ACK).

3. **System configuration**

(3) System connected to the system controllers (MELANS)

Error source address	Error display	Detection method	Cause	Check method and remedy
ME remote controller (RC)	ME remote controller (RC) System controller (SC) MA remote controller (MA)	No acknowledgement (ACK) at IC transmission to RC	Same as grouping of units in a system with multiple outdoor units	Same remedy as that for grouping of units in a system with multiple outdoor units
	System controller (SC)	No acknowledgement (ACK) at MELANS transmission to RC	1. Error occurrence on some IC (1) Same cause as that for system with one outdoor unit	Same remedy as that for system with one outdoor unit
			2. Error occurrence on all IC in the system with one outdoor unit (1) An error is found by the outdoor unit. Total capacity error (7100) Capacity code error (7101) Error in the number of connected units (7102) Address setting error (7105) (2) Disconnection or short circuit of the transmission line for the outdoor unit on the terminal block for centralized control line connection (TB7) (3) Turn off the power source of the outdoor unit (4) Malfunction of electrical system for the outdoor unit	1) Check the LED display for troubleshooting on the outdoor unit. • If an error is found, check the check code definition, and correct the error. • If no error is found, check the cause 2). 2) Check (2) - (4) on the left.
			3. Error occurrence on all IC (1) Same causes as (1) - (4) described in 2. (2) When the power supply unit for transmission lines is used and the male power supply connector is connected to the female power supply switch connector (CN40) for the transmission line for centralized control (3) Disconnection or shutdown of the power source of the power supply unit for transmission line (4) System controller (MELANS) malfunction	Check (1) - (4) on the left.

1. Error Code

6607

No ACK error

2. Error definition and error detection method

The error is detected when no acknowledgement (ACK signal) is received after the transmission. (eg. When the data is transmitted six times in a row with 30 seconds interval, the error is detected on the transmission side.)

Note

The address/attribute appeared on the display on the remote controller indicates the controller which did not provide the response (ACK).

3. System configuration

(3) System connected to the system controllers (MELANS)

Error source address	Error display	Detection method	Cause	Check method and remedy
System controller (SC)	ME remote controller (RC) MA remote controller (MA)	No acknowledgement (ACK) at IC transmission to SC	1. Error display on some displays on ME remote controllers (1) Faulty wiring of the transmission line for ME remote controller (2) Disconnection or contact failure of the transmission connector for ME remote controller (3) ME remote controller failure	Check (1) - (3) on the left.
			2. Error occurrence on all IC in the system with one outdoor unit (1) An error is found by the outdoor unit. Total capacity error (7100) Capacity code error (7101) Error in the number of connected units (7102) Address setting error (7105) (2) Disconnection or short circuit of the transmission line for the outdoor unit on the terminal block for centralized control line connection (TB7) (3) Turn off the power source of the outdoor unit (4) Malfunction of electrical system for the outdoor unit	1) Check the LED display for troubleshooting on the outdoor unit. • If an error is found, check the check code definition, and correct the error. • If no error is found, check the cause 2) 2) Check (2) - (4) on the left.
			3. Error display on all displays on ME remote controllers (1) Same causes as (1) - (4) described in 2. (2) When the power supply unit for transmission lines is used and the male power supply connector is connected to the female power supply switch connector (CN40) for the transmission line for centralized control (3) Disconnection or shutdown of the power source of the power supply unit for transmission line (4) System controller (MELANS) malfunction	Check (1) - (4) on the left

1. **Error Code**

6607

No ACK error

2. **Error definition and error detection method**

The error is detected when no acknowledgement (ACK signal) is received after the transmission. (eg. When the data is transmitted six times in a row with 30 seconds interval, the error is detected on the transmission side.)

Note

The address/attribute appeared on the display on the remote controller indicates the controller which did not provide the response (ACK).

3. **System configuration**

(4) Errors that are not limited to a particular system

Error source address	Error display	Detection method	Cause	Check method and remedy
Address which should not be existed	-	-	(1) Although the address of ME remote controller has been changed after the group is set using ME remote controller, the indoor unit is keeping the memory of the previous address. The same symptom will appear for the registration with SC. (2) Although the address of LOSSNAY has been changed after the interlock registration of LOSSNAY is made using ME remote controller, the indoor unit is keeping the memory of the previous address.	Delete unnecessary information of non-existing address which some indoor units have. Use either of the following two methods for deletion. 1) Address deletion by ME remote controller Delete unnecessary address information using the manual setting function of ME remote controller. Refer to Outdoor service handbook. 2) Deletion of connection information of the outdoor unit by the deleting switch **Note that the above method will delete all the group settings set via the ME remote controller and all the interlock settings between LOSSNAY units and indoor units.** • Turn off the power source of the outdoor unit, and wait for 5 minutes. • Turn on the dip switch (SW2-2) on the outdoor unit control board. • Turn on the power source of the outdoor unit, and wait for 5 minutes. • Turn off the power source of the outdoor unit, and wait for 5 minutes. • Turn off the dip switch (SW2-2) on the outdoor unit control board. • Turn on the power source of the outdoor unit.

1. Error Code

6608

No response error

2. Error definition and error detection method

- When no response command is returned although acknowledgement (ACK) is received after transmission, an error is detected.
- When the data is transmitted 10 times in a row with 3 seconds interval, an error is detected on the transmission side.

Note

The address/attribute appeared on the display on the remote controller indicates the controller where an error occurred.

3. Cause

1) The transmission line work is performed while the power is on, the transmitted data will collide, and the wave shape will be changed.
2) The transmission is sent and received repeatedly due to noise.
3) Decrease of transmission line voltage/signal by exceeding acceptable range of transmission wiring.
   Farthest:200m [656ft] or less
   Remote controller wiring:12m [39ft] or less
4) The transmission line voltage/signal is decreased due to erroneous sizing of transmission line.
   Wire diameter: 1.25mm^2[AWG16] or more

4. Check method and remedy

1) When an error occurs during commissioning, turn off the power sources for the outdoor unit, indoor unit, and LOSSNAY for 5 or more minutes, and then turn them on again.
   - When they return to normal operation, the cause of the error is the transmission line work performed with the power on.
   - If an error occurs again, check the cause 2).
2) Check 3) and 4) above.
   - If the cause is found, correct it.
   - If no cause is found, check 3).
3) Check transmission wave shape/ noise on trans-mission line by following the instructions detailed in the Outdoor service handbook.
   Noise is the most possible cause of the error "6608".

1. Error Code

6831

MA controller signal reception error (No signal reception)

2. Error definition and error detection method

- Communication between the MA remote controller and the indoor unit is not done properly.
- No proper data has been received for 3 minutes.

3. Cause

1) Contact failure of the remote controller lines of MA remote controller or the indoor unit.
2) All the remote controllers are set to SUB.
3) Failure to meet wiring regulations
   - Wire length
   - Wire size
   - Number of remote controllers
   - Number of indoor units
4) The remote controller is removed after the installation without turning the power source off.
5) Noise interference on the remote controller transmission lines
6) Faulty circuit that is on the indoor board and performs transmission/ reception of the signal from the remote controller
7) Problems with the circuit on the remote controller that sends or receives the signals from the remote controller

4. Check method and remedy

1) Check for disconnected or loose transmission lines for the indoor units or MA remote controllers.
2) Confirm that the power is supplied to the main power source and the remote controller line.
3) Confirm that MA remote controller's capacity limit is not exceeded.
4) Check the sub/main setting of the MA remote controllers.One of them must be set to MAIN.
5) Diagnose the remote controller (described in the remote controller installation manual).
   [OK]: no problems with the remote controller (check the wiring regulations)
   [NG]: Replace the MA remote controller.
   [6832, 6833, ERC]: Due to noise interference <Go to 6)>
6) Check wave shape/noise on MA remote controller line by following the instructions detailed in the Outdoor service handbook.
7) When no problems are found with items 1) through 6), replace the indoor unit board or the MA remote controller.
   The following status can be confirmed on LED1 and 2 on the indoor unit board.
   - If LED1 is lit, the main power source of the indoor unit is turned on.
   - If LED2 is lit, the MA remote controller line is being powered.

1. Error Code

6832

MA remote controller signal transmission error (Synchronization error)

2. Error definition and error detection method

- MA remote controller and the indoor unit is not done properly.
- Failure to detect opening in the transmission path and unable to send signals
  - ∗Indoor unit : 3 minutes
  - ∗Remote controller : 6 seconds

3. Cause

1) Contact failure of the remote controller lines of MA remote controller or the indoor unit
2) 2 or more remote controllers are set to MAIN
3) Overlapped indoor unit address
4) Noise interference on the remote controller lines
5) Failure to meet wiring regulations
   - Wire length
   - Wire size
   - Number of remote controllers
   - Number of indoor units
6) Problems with the circuit on the remote controller that sends or receives the signals from the remote controller

4. Check method and remedy

1) Check for disconnected or loose transmission lines for the indoor units or MA remote controllers.
2) Confirm that the power is supplied to the main power source and the remote controller line.
3) Confirm that MA remote controller's capacity limit is not exceeded.
4) Check the sub/main setting of the MA remote controllers.One of them must be set to MAIN.
5) Diagnose the remote controller (described in the remote controller installation manual).
   [OK]: no problems with the remote controller (check the wiring regulations)
   [NG]: Replace the MA remote controller.
   [6832, 6833, ERC]: Due to noise interference <Go to 6)>
6) Check wave shape/noise on MA remote controller line by following the instructions detailed in the Outdoor service handbook.
7) When no problems are found with items 1) through 6), replace the indoor unit board or the MA remote controller.
   The following status can be confirmed on LED1 and 2 on the indoor unit board.
   - If LED1 is lit, the main power source of the indoor unit is turned on.
   - If LED2 is lit, the MA remote controller line is being powered.

1. Error Code

6833

MA remote controller signal transmission error (Hardware error)

2. Error definition and error detection method

- Communication between the MA remote controller and the indoor unit is not done properly.
- An error occurs when the transmitted data and the received data differ for 30 times in a row.

3. Cause

1) Contact failure of the remote controller lines of MA remote controller or the indoor unit
2) 2 or more remote controllers are set to MAIN
3) Overlapped indoor unit address
4) Noise interference on the remote controller lines
5) Failure to meet wiring regulations
   - Wire length
   - Wire size
   - Number of remote controllers
   - Number of indoor units
6) Problems with the circuit on the remote controller that sends or receives the signals from the remote controller

4. Check method and remedy

1) Check for disconnected or loose transmission lines for the indoor units or MA remote controllers.
2) Confirm that the power is supplied to the main power source and the remote controller line.
3) Confirm that MA remote controller's capacity limit is not exceeded.
4) Check the sub/main setting of the MA remote controllers.One of them must be set to MAIN.
5) Diagnose the remote controller (described in the remote controller installation manual).
   [OK]: no problems with the remote controller (check the wiring regulations)
   [NG]: Replace the MA remote controller.
   [6832, 6833, ERC]: Due to noise interference <Go to 6)>
6) Check wave shape/noise on MA remote controller line by following the instructions detailed in the Outdoor service handbook.
7) When no problems are found with items 1) through 6), replace the indoor unit board or the MA remote controller.
   The following status can be confirmed on LED1 and 2 on the indoor unit board.
   - If LED1 is lit, the main power source of the indoor unit is turned on.
   - If LED2 is lit, the MA remote controller line is being powered.

1. Error Code

6834

MA controller signal reception error (Start bit detection error)

2. Error definition and error detection method

- Communication between the MA remote controller and the indoor unit is not done properly.
- No proper data has been received for 2 minutes.

3. Cause

1) Contact failure of the remote controller lines of MA remote controller or the indoor unit.
2) All the remote controllers are set to SUB.
3) Failure to meet wiring regulations
   - Wire length
   - Wire size
   - Number of remote controllers
   - Number of indoor units
4) The remote controller is removed after the installation without turning the power source off.
5) Noise interference on the remote controller transmission lines
6) Faulty circuit that is on the indoor board and performs transmission/ reception of the signal from the remote controller
7) Problems with the circuit on the remote controller that sends or receives the signals from the remote controller

4. Check method and remedy

1) Check for disconnected or loose transmission lines for the indoor units or MA remote controllers.
2) Confirm that the power is supplied to the main power source and the remote controller line.
3) Confirm that MA remote controller's capacity limit is not exceeded.
4) Check the sub/main setting of the MA remote controllers.One of them must be set to MAIN.
5) Diagnose the remote controller (described in the remote controller installation manual).
   [OK]: no problems with the remote controller (check the wiring regulations)
   [NG]: Replace the MA remote controller.
   [6832, 6833, ERC]: Due to noise interference <Go to 6)>
6) Check wave shape/noise on MA remote controller line by following the instructions detailed in the Outdoor service handbook.
7) When no problems are found with items 1) through 6), replace the indoor unit board or the MA remote controller.
   The following status can be confirmed on LED1 and 2 on the indoor unit board.
   - If LED1 is lit, the main power source of the indoor unit is turned on
   - If LED2 is lit, the MA remote controller line is being powered.

1. **Error Code**

7101

Capacity code setting error

2. **Error definition and error detection method**

Connection of incompatible (wrong capacity code) indoor unit or outdoor unit

3. **Error source, cause, check method and remedy**

Error source	Cause	Check method and remedy
Outdoor unit Indoor unit	(1) The model name (capacity code) set by the switch (SW2) is wrong. *The capacity of the indoor unit can be confirmed by the self-diagnosis function (SW1 operation) of the outdoor unit.	1) Check the model name (capacity code) of the indoor unit which has the error source address set by the switch (SW2 on indoor unit board). When the model name set by the switch is different from that of the unit connected, turn off the power source of the outdoor and the indoor units, and change the setting of the capacity code.
Outdoor unit	(2) The model selection switches (SW5-1 - 5-4) on the outdoor unit are set incorrectly.	Check the setting for the model selection switch on the outdoor unit (Dipswitches SW5-1 - 5-4 on the outdoor unit control board).

Model	SW5			
	1	2	3	4
72 model	OFF	ON	OFF	OFF
96 model	ON	ON	OFF	OFF
120 model	OFF	OFF	ON	OFF
144 model	OFF	ON	ON	OFF

1. **Error Code**

7111

Remote controller sensor fault

2. **Error definition and error detection method**

This error occurs when the temperature data is not sent although the remote controller sensor is specified.

3. **Error source, cause, check method and remedy**

Error source	Cause	Check method and remedy
Indoor unit OA processing unit	The remote controller without the temperature sensor (the wireless remote controller or the ME compact remote controller (mounted type)) is used and the remote controller sensor for the indoor unit is specified. (SW1-1 is ON.)	Replace the remote controller with the one with built-in temperature sensor.

3. DC fan motor (fan motor/INV board)

- If there are problems only with the fan motor, replace the fan motor only.
  (Fan motor failure will cause an overcurrent to pass through the inverter, but the inverter is protected from damage with the protection function that will stop the inverter when an overcurrent is detected.)
- If the inverter fails, replace the failed components on the inverter.
- If both the fan motor and inverter fail, replace the fan motor and all applicable parts on the inverter.

1. Troubleshooting the inverter-related problems

	Error codes and symptoms	Check items
[1]	Inverter-related errors 4255, 4225, 4235, 5110, 5305	Check the error history on the outdoor unit circuit board LED.
[2]	Main power breaker is tripped.	1) Check the breaker capacity.
		2) Check the electric circuits other than the inverter circuits for short-circuit and ground fault.
		3) If no problems are found with items 1) and 2), see 3.-[1].
[3]	The main earth leakage breaker is tripped.	1) Check the capacity and the sensitivity current of the earth leakage breaker.
		2) Insulation resistance failure of the electrical components other than the inverter
		3) If no problems are found with items 1) and 2), see 3.-[1].
[4]	Only the fan motor is inoperative.	Check the display on the remote controller. If the fan is in operation, proceed to section 2.-[2] and 2.-[3].
[5]	The fan motor vibrates excessively or makes abnormal sounds.	See 2.-[2] and 2.-[3].
[6]	Peripheral devices pick up electrical noise.	1) Check that the power wire to the peripheral devices are not routed adjacent to the power wire to the indoor unit.
		2) Check that the inverter output wiring is not routed adjacent to the power wire or transmission line.
		3) Check that a shielded cable is used if required. Check that the shield is properly grounded.
		4) Insulation resistance failure of the electrical components other than the inverter
		5) Connect the unit to a different power supply circuit.
		6) If the problem appeared suddenly, there is a possibility that the inverter output line had a ground fault. See section 2.-[2] and 2.-[3].
		♦For problems other than the ones listed above, consult your dealer.
[7]	Accidental malfunction (due to external noise)	1) Check that the unit is properly grounded.
		2) Check that a shielded cable is used if required. Check that the shield is properly grounded.
		3) Check that the transmission line or wiring to external devices are not routed adjacent to the power wires or are placed in the same conduit with them.
		♦For problems other than the ones listed above, consult your dealer.

1) Inside the inverter is a large capacity electrolytic capacitor, and the residual voltage that remains after the main power is turned off presents a risk of electric shock. Before checking the inverter-related parts, turn off the main power, keep it turned off for at least 10 minutes, and check that the voltage at both ends of the main capacitor (C015, C016) has dropped to a safe level.
   - Measure the voltage at both ends of the electrolytic capacitor at the check point where "CHECK VOLTAGE" is written in the left top area of the NF board.
2) The IPM on the inverter becomes damaged if there are loose screws or connectors. When a problem occurs after replacing components, faulty wiring is often the cause of the problem. Check the wiring, screws, connectors, and Fasten terminals for proper connection.
3) Do not plug or unplug the inverter connectors while the main power is turned on, as this will result in damage to the circuit board.
4) Electric current sensor will break if a current is passed through the sensor without it being connected to the circuit board. Connect the current sensor to the appropriate connectors on the circuit board before operating the inverter.

2. Troubleshooting the inverter output-related problems

	Check items	Symptoms	Actions to take
[1] Check the INV board error detection circuit. (unloaded)	(1) Turn off the breaker. •Be sure to turn off the breaker. (2) Disconnect the connector CNINV from the INV board. (3) Turn on the breaker. (4) Operate the indoor units.	1) Overcurrent errors Error code:4255	Replace the INV board.
		2) Logic error Error code:4225	Replace the INV board.
		3) ACCT sensor circuit failure Error code:5305	Replace the INV board.
		4) Position detection error Error code:4255	If the problem described at left happens when the power is turned on for the first time, replace the INV board. •Removing the connector CNINV while the power is turned on can cause the problem described at left. Be sure to turn off the power before disconnecting the connector CNINV.
		5) Open-circuited IPM or disconnected ACCT sensor Error code:5305	Normal
[2] Check the inverter for damage. (unloaded)	(1) Turn off the breaker. •Be sure to turn off the breaker. (2) Disconnect the connector CNINV from the INV board. (3) Turn SW2-1 on the INV board to ON. (4) Turn on the breaker. (5) Operate the indoor units. The units will operate for approximately 30 seconds unloaded and then stop. Error code:4255 During the unloaded operation, a constant line voltage of approximately 20V will be output.	1) An error is detected in less than 30 seconds of startup. (LED2 on the INV board lights up.)	Replace the INV board.
		2) The line voltage imbalance is 5V or greater.	Replace the INV board.
		3) There is no line voltage imbalance. An error is detected after 30 seconds of startup (LED2 on the INV board lights up.), and the units will stop.	Normal •Reconnect the CNINV connector, and set the SW2 back to its original setting after checking.

	Check items	Symptoms	Actions to take
[3] Check for inverter damage. (loaded)	(1) Turn off the breaker.	1) The units stop within 10 seconds of startup, and a position detection error or an overcurrent error is detected. Error code:4255	Check to see if the fan motor is locked. Replace the fan motor if it is locked. If the problem persists after replacing the fan motor, replace the INV board. If the fan motor is not locked, go to item [4]. If no problems were found with item [4], replace the INV board. If the problem persists after replacing the INV board, replace the fan motor.
	(2) Turn on the breaker.	2) An overcurrent error is detected after approximately 10 seconds of operation. Error code:4255	a)Replace the INV board. b)If the problem persists after replacing the INV board, replace the fan motor.
	(3) Operate the indoor units.	3) Overcurrent error due to short-circuited motor Error code:4255	a)If no problems were found with items [1] and [2], check for short-circuited motor wiring. b)If no problems were found with item a), replace the fan motor. c)If the problem persists after replacing the fan motor, replace the INV board.
		4) A line voltage imbalance exceeds the greater of the following after the rotation speed has been stabilized: 5% or 5V.	a)If a voltage imbalance is detected, go to item [4]. b)If no problems were found with item [4], replace the INV board. c)If the problem persists after replacing the INV board, replace the fan motor.
[4] Check the fan motor for a ground fault and check the coil for problems.	Disconnect the indoor unit fan motor wiring, and check the resistance and the wire-wound resistance of the fan motor.	1) Insulation resistance failure of the fan motor Insulation resistance of below 1 MΩ is considered abnormal.	Replace the fan motor.
		2) Broken fan motor wire Reference value: Normal wirewound resistance is several ohms. (Varies with the temperature)	Replace the fan motor.

3. Troubleshooting when the main power breaker trips

	Check items	Symptoms	Actions to take
[1]	Check the resistance between the terminals of power supply terminal block TB2 with an ohmmeter.	1) 0 to several ohms, or insulation resistance failure	Check the components in the main inverter circuit. *Refer to "4. Simple check on the main inverter circuit components".(page 51) a) Diode bridge b) Inrush current limiting resistor c) AC reactor (ACL) d) Current sensor (ACCT)
[2]	Turn the power back on and check again.	1) Main power breaker is tripped.	
		2) Nothing appears on the remote controller.	
[3]	Check the indoor unit for normal operation.	1) The indoor unit operates normally without tripping the main breaker.	a) Look for a possible short-circuit, and if found, repair. b) If no problems are found with item "a)" there may be problems with the fan motor.
		2) Main power breaker is tripped.	The fan motor may have had a ground fault. See section 2.-[1].

4. Simple check on the main inverter circuit components

Note

Turn off the power supply, take the following components out of the control box, and then check the components.

Parts name	Evaluation criteria
Diode bridge	Refer to "5. Troubleshooting the diode bridge".
Inrush current limiting resistor R	Measure the resistance between terminals : 22 Ω ± 10%
AC reactor (ACL)	Measure the resistance between terminals. : 1 Ω or less Measure the resistance between terminals and the chassis: ∞
Current sensor ACCT	Disconnect the CNCT2 connector, and check the resistance between the terminals. 580 Ω ± 30 Ω
THHS sensor	Disconnect the connector CNTH, and measure the resistance between connector terminals. Check that the terminals are not short-circuited (0 Ω) or open-circuited (∞ Ω).

5. Troubleshooting the diode bridge

Measure the resistance between terminals of the diode bridge with a tester, and use the measured value for troubleshooting.

1) Read before taking measurements.

- Check the polarity before taking measurements. Black is positive on a regular multimeter when it is used to measure resistance.
- Check that the circuit is not completely open (∞ Ω) or short-circuited (- 0 Ω).
- These resistance measurement values are provided only as a guide, and small deviations from these values are allowed.
- If the resistance between a given terminal and other terminals all fall within a range of minus 50% and plus 100%, the resistance is normal.

2) **Tester restrictions**

- **Use a tester that has an internal voltage supply of 1.5 V or greater.**
- **Use a dry-battery-powered tester.**

(An accurate diode resistance measurement cannot be obtained with a button-battery-operated card tester because of its low applied voltage.)

- **Use a tester that can measure in small increments.**

It will allow for more accurate measurement.

3) External view

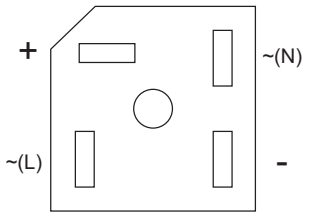

<Reference values for resistance check>

		Black (+)			
		+	-	~(L)	~(N)
Red (-)	+	-	-	5 - 200 Ω	5 - 200 Ω
	-	-	-	∞	∞
	~(L)	∞	5 - 200 Ω	-	-
	~(N)	∞	5 - 200 Ω	-	-

4) Internal circuit diagram

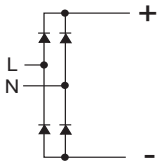

6. Precautions for inverter parts replacement

1) Check for faulty or loose wiring.
To avoid damage to the IPM, thoroughly check the wiring to the main circuit components in the diode bridge.

2) Securely attach the diode bridge with mounting screws.

4. LEV

LEV operation

An LEV (Indoor unit: Linear expansion valve), is a stepping-motor-driven valve that operates by receiving the pulse signals from the indoor and outdoor unit control boards.

1. Indoor LEV

The valve opening changes according to the number of pulses.

(1) Indoor controller board and LEV connection.

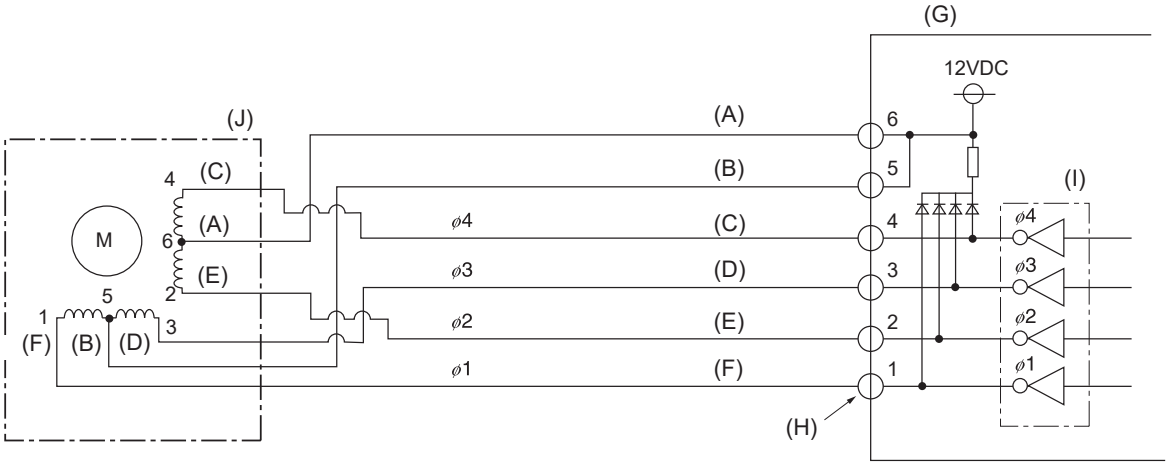

(A)	Brown	(F)	White
(B)	Red	(G)	Control board
(C)	Blue	(H)	Connection (CN60,CN7V)
(D)	Orange	(I)	Drive circuit
(E)	Yellow	(J)	Linear expansion valve

(2) Pulse signal output and valve operation

Output (phase) number	Output state			
	1	2	3	4
ϕ1	ON	OFF	OFF	ON
ϕ2	ON	ON	OFF	OFF
ϕ3	OFF	ON	ON	OFF
ϕ4	OFF	OFF	ON	ON

Output pulses change in the following orders when the
Valve is closed; 1 →2 →3 → 4 → 1
Valve is open; 4 →3 →2 → 1 → 4

*1. When the LEV opening angle does not change, all the output phases will be off.
*2. When the output is open phase or remains ON, the motor cannot run smoothly, and rattles and vibrates.

(3) LEV valve closing and opening operation

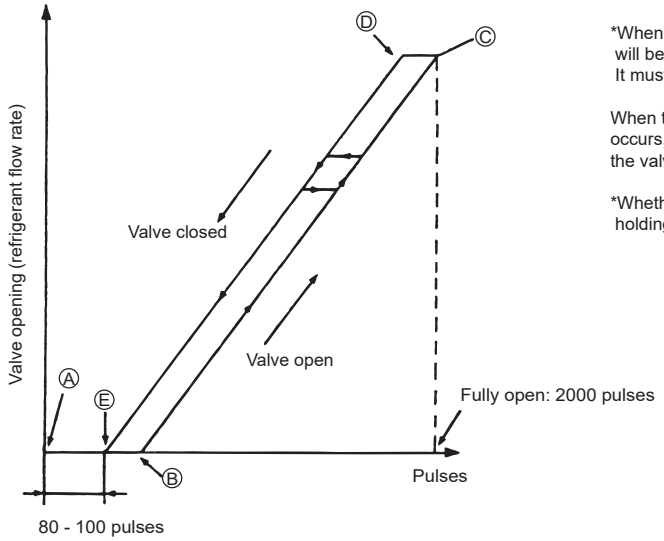

*When the power is turned on, the valve closing signal of 2200 pulses will be output from the indoor board to LEV to fix the valve position. It must be fixed at point Ⓐ.

When the valve operates smoothly, no sound from LEV or no vibration occurs, however, when the pulses change from Ⓔ to Ⓐ in the chart or the valve is locked, a big sound occurs.

*Whether a sound is generated or not can be determined by holding a screwdriver against it, then placing your ear against the handle.

2. Judgment methods and possible failure mode

Malfunction mode	Judgment method	Remedy
Microcomputer driver circuit failure	Disconnect the control board connector and connect the check LED as shown in the figure below. 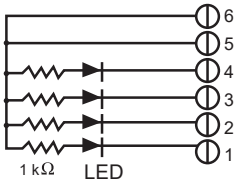 resistance : 0.25W 1kΩ LED : DC15V 20mA or more When the main power is turned on, the indoor controller board outputs pulse signals to the indoor unit LEV for 10 seconds, and the outdoor unit circuit board outputs pulse signals to the outdoor unit LEV for 17 seconds. If any of the LED remains lit or unlit, the drive circuit is faulty.	When the drive circuit has a problem, replace the control board.
LEV mechanism is locked	If the LEV is locked, the drive motor runs idle, and makes a small clicking sound. When the valve makes a closing and opening sound, the valve has a problem.	Replace the LEV.
Disconnected or short-circuited LEV motor coil	Measure resistance between the coils (red - white, red -orange, brown - yellow, brown - blue) using a tester. They are normal if resistance is 150ohm ± 10%.	Replace the LEV coils.
Incomple sealing (leak from the valve)	When checking the refrigerant leak from the indoor LEV, run the target indoor unit in the fan mode, and the other indoor units in the cooling mode. Then, check the liquid temperature (TH22) with the self-diagnosis LED. When the unit is running in the fan mode, the LEV is fully closed, and the temperature detected by the thermistor is not low. If there is a leak, however, the temperature will be low. If the temperature is extremely low compared with the inlet temperature displayed on the remote controller, the LEV is not properly sealed, however, if there is a little leak, it is not necessary to replace the LEV when there are no effects to other parts. 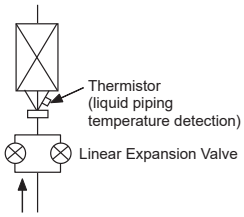 	If there is a large amount of leakage, replace the LEV.
Faulty wire connections in the connector or faulty contact	1. Check for loose pins on the connector and check the colors of the lead wires visually 2. Disconnect the control board's connector and conduct a continuity check using a tester.	Check the continuity at the points where an error occurs.

5. Address switch setting

Make sure that power to the unit is turned off.

Indoor controller board

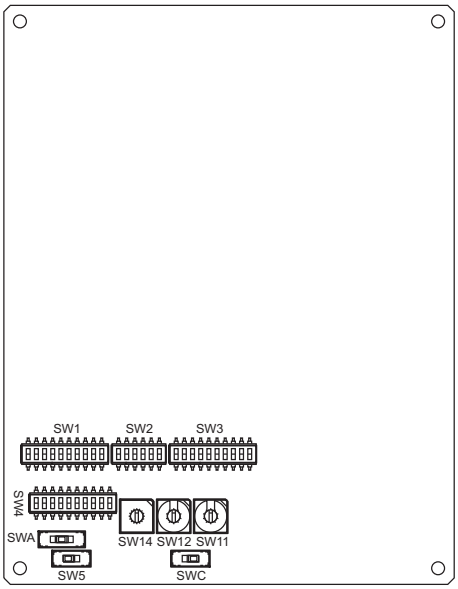

1. Address is set with a combination of SW12 (10's digit) and SW11 (1's digit).
   To set the address to "3," set SW12 to "0" and SW11 to "3."
   To set the address to "25," set SW 12 to "2" and SW 11 to "5."

6. Test point diagram

1. Indoor controller board

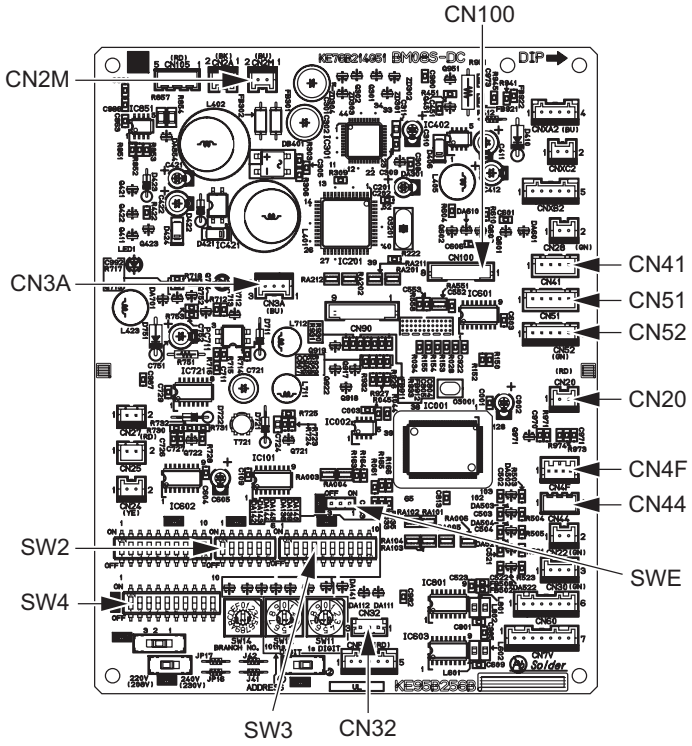

CN2M	For M-NET transmission cable connection (24 - 30VDC)
SWE	Emergency operation
SW2	Capacity setting
SW4	Function setting
SW3	Function setting
CN32	Remote start/stop adapter
CN3A	For MA remote controller cable connection (10 - 13 VDC (Between 1 and 3.))
CN52	Remote display
CN51	Centralized control
CN41	JAMA standard HA terminal A
CN44	Thermistor (liquid/gas temperature)
CN4F	Connector for float switch
CN20	Thermistor (Inlet temperature)
CN100	Connect to the Power supply board

2. Noise filter board (NF board)

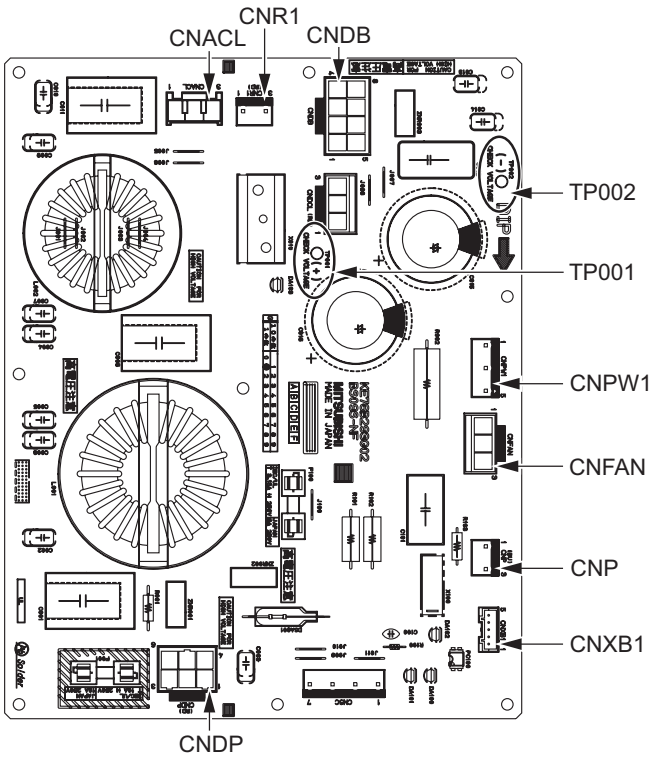

CNDP	Power supply voltage (220-240VAC)
CNACL	Connect to the AC reactor
CNR1	Connect to the Resistor
CNDB	Connect to the Diode bridge
CNPW1	Connect to the Power supply board
CNFAN	Connect to the INV board
CNXB1	Connect to the indoor controller board
TP001, TP002	Measure the charged voltage of the inverter electrolytic capacitor here. TP001…Anode TP002…Cathode
CNP	Connect to the drain pump (Optional parts)

3. Power supply board

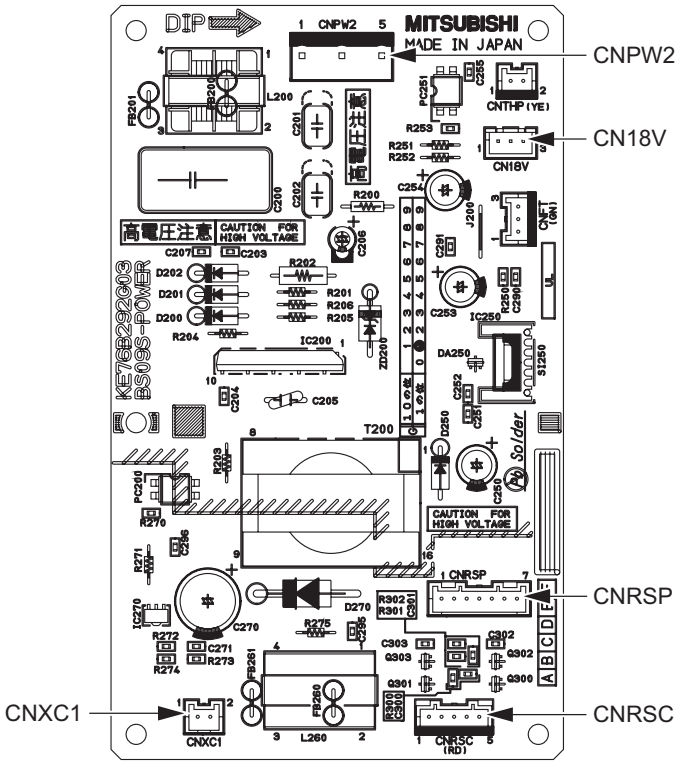

CNPW2	Connect to the NF board
CNCX1	Connect to the indoor controller board
CNRSC	Connect to the indoor controller board
CNRSP	Connect to the INV board
CN18V	Connect to the INV board

4. INV board

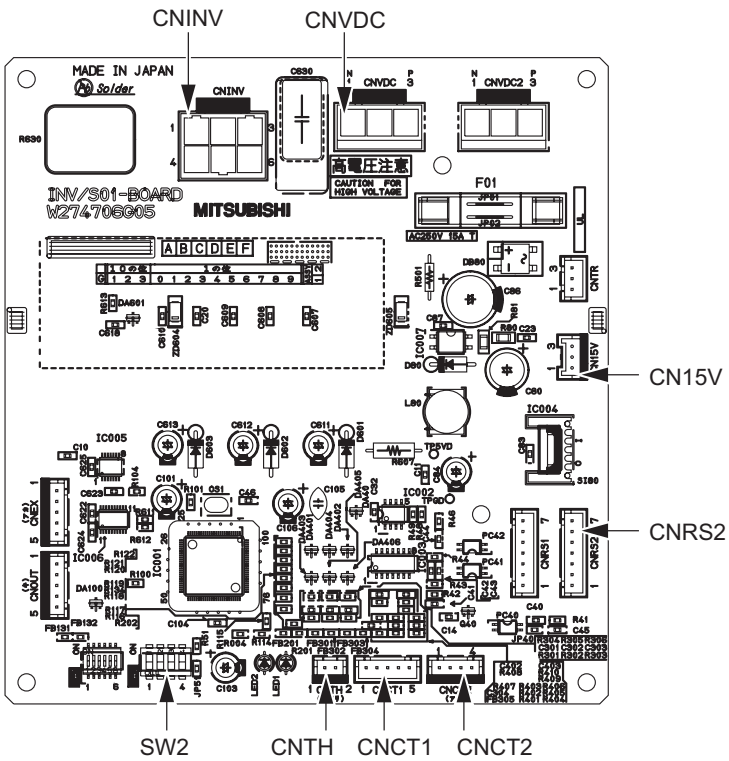

SW2	Inverter function setting
CNVDC	Connect to the NF board
CNINV	Connect to the FAN motor (Power line)
CN15V	Connect to the Power supply board
CNRS2	Connect to the Power supply board
CNCT1	Connect to the FAN motor (Rotor position sensor input)
CNCT2	Connect to the Current sensor
CNTH	Connect to the Thermistor (heat sink)

7. Dipswitch setting (Factory setting)

1. Function setting

(1) SW1

Switch position	Function	Switch setting	
		ON	OFF
1	Active Thermistor (Intake air thermistor)	Built-in thermistor on the remote controller	Indoor unit
2	Filter clogging detection	Available	Unavailable
3	Filter life	2500 hr	100 hr
4	Outdoor air intake	Enabled	Disabled
5	Remote display	Thermo-ON signal	Fan output
6	Humidifier operation	During heating mode	During heating operation
7	Fan speed	Low	Very low
8	Fan speed at heating Thermo-OFF	Preset fan speed	Follows the setting of SW1-7
9	Auto restart after power failure	Enabled	Disabled
10	Power start/stop	Enabled	Disabled

Factory setting

(2) SW3

Switch position	Function	Switch setting	
		ON	OFF
1	Unit type	Cooling only	Heat pump
2	-	-	-
3	-	-	-
4	-	-	-
5	-	-	-
6	-	-	-
7	-	-	-
8	Heating 4-deg up	Disabled	Enabled
9	-	-	-
10	-	-	-

Dipswitch settings must be made while the unit is stopped.

Factory setting

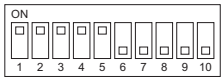

The figure at left shows that the switches 1 through 5 are set to ON and 6 through 10 are set to OFF.

2. Capacity code setting

(1) SW2

Dipswitch settings must be made while the unit is stopped.
Factory setting
The switches are set to correspond to the unit capacity.

TPEFYP072MH140A

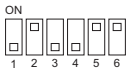

TPEFYP096MH140A

3. Model setting

(1) SW4

1) Indoor controller board

Dipswitch settings must be made while the unit is stopped.

Factory setting

Note:
Changes made to the dipswitches SW1, SW2, and SW3 will become effective when the unit comes to a stop (remote controller off). There is no need to power cycle the unit.

4. Power voltage setting

(1) SW5

1) Indoor controller board

Dipswitch settings must be operated with the main power turned OFF.

Factory setting

Set SW5 to 240V side when the power supply is 230 volts.
When the power supply is 208 volts, set SW5 to 220V side.

5. External static pressure

(1) SWA, SWC

1) Indoor controller board

All models

External static pressure	SWA	SWC
50Pa	3 2 1	② ①
100Pa	3 2 1	
150Pa	3 2 1	
200Pa	3 2 1	② ①
250Pa	3 2 1	

Factory setting

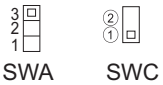

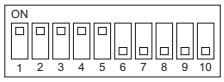

The figure at left shows that the switches 1 through 5 are set to ON and 6 through 10 are set to OFF.

Note:
Changes that are made to the dipswitches SWA and SWC immediately become effective regardless of the unit's operation status (RUN/STOP) or the remote controller status (ON/OFF).

⚠ CAUTION

If the static pressure setting for the duct is lower than that for the unit, the fan of the unit may repeat start/stop, and the static pressure setting may automatically be lowered. Check the static pressure setting, and then match the static pressure setting for the unit to that for the duct. When the static pressure setting is lowered, reset the power supply of the system or change the static pressure setting, and then the static pressure setting that has been automatically lowered will be reset.

When using TAR-40MAAU remote controller, the static pressure settings can be made from the remote controller.

♦To set the external static pressure from the function selection screen on the remote controller (Only TAR-40MAAU)

Follow the instructions below and the instructions detailed in the remote controller manual for how to set the switches.

1. Set the function setting No. 32 (Switch setting/Function selection) to “2”.
2. Set the function setting No. 8 and No. 10 to appropriate values, according to the external static pressure.

Selection	Function setting No.	Initial setting	Current setting
	No. 32		
Switch setting	1	O	
Function selection	2		

External static pressure setting	Function setting No.		Initial setting	Current setting
	No. 8	No. 10		
50Pa	1	1		
100Pa	2	1		
150Pa	3	1	O	
200Pa	2	2		
250Pa	3	2		

[Important]

♦Be sure to write down the settings for all functions in the “Current setting” row if any of the initial settings has been changed.

2) Selecting a function

*The steps below explain how to set the settings on the MA Smart Remote Controller.

♦To change the settings

1. Select Function setting from the Service menu to bring up the Function setting screen. (Refer to the remote controller manual for how to set the items in the service menu.)

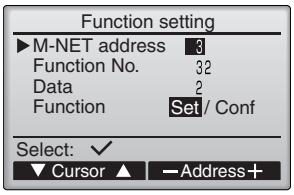

2. Using the F1 through F4 buttons, set the settings for the M-NET address, Function No., and Data, select “Set”, and press the Enter button. The settings signals will be sent from the remote controller to the indoor units.

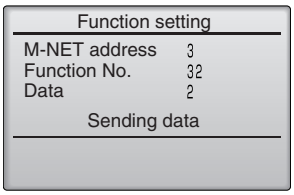

3. “Sending data” will appear on the screen, and when signal transmission is successfully completed, “Setting completed” will appear. Press the BACK button to return to the Function setting screen.

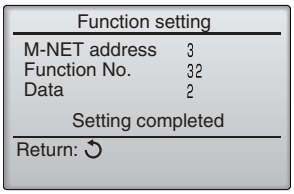

♦To confirm the setting

1. Select Function setting from the Service menu to bring up the Function setting screen. (Refer to the remote controller manual for how to set the items in the service menu.)
2. Using the F1 through F4 buttons, set the settings for the M-NET address, Function No., and Data, select “Conf”, and press the Enter button.
3. “Checking” will appear on the screen, and when signal transmission is successfully completed, the current settings values will be displayed.

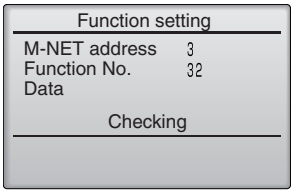

Notes:
- The actual static pressure setting and the Dip switch setting may not match if the setting was set from the remote controller.
- To check the static pressure setting, check it on the remote controller, not on the dip switch.

6. 1s and 10ths digits

(1) SW11, SW12 (Rotary switch)

The use of a network remote controller (PAR-F27MEA) requires address setting.

1) Indoor control board

Address settings must be made while the unit is stopped.

Factory setting

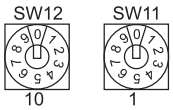

7. Connection No. setting

(1) SW14 (Rotary switch)

This switch is used when the unit connected to an R2 series of outdoor unit.

1) Indoor control board

Factory setting

Note

Changes to the dipswitches SW11, SW12, SW14, and SW15 must be made while the unit is stopped and the remote controller is OFF.

[9] Disassembly Procedure

1. Control box

Exercise caution when removing heavy parts.

1. Removing the control box cover

(1) Remove the two fixing screws on the cover (A) to remove it.

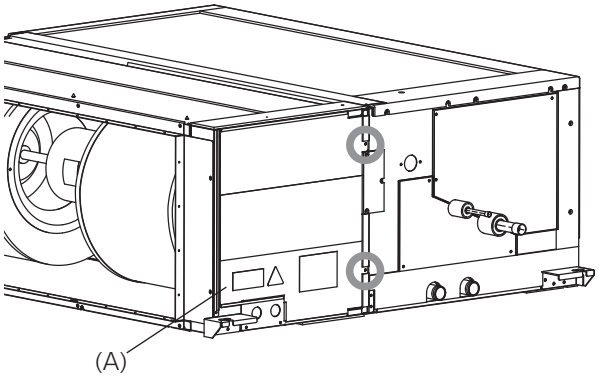

Fig.1

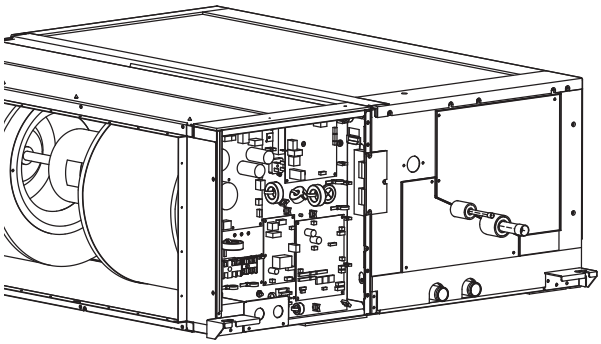

Fig.2

2. Thermistor (Intake air)

Exercise caution when removing heavy parts.

1. Remove the control box cover according to the procedure in section **1. Control box**.

2. Disconnect the connector (CN20) from the Indoor controller board.

3. Pull out the thermistor holder (B) and thermistor (C) on the control box.

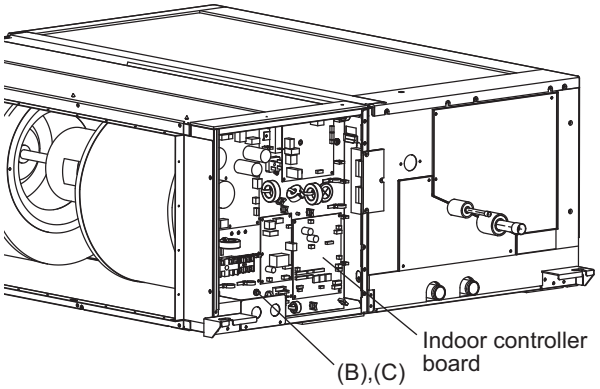

Fig.3

3. Thermistor (Gas pipe) (Liquid pipe) · LEV

Exercise caution when removing heavy parts.

1. Remove the control box cover according to the procedure in section **1. Control box**.

2. Removing the maintenance cover

(1) Remove the ten fixing screws on the cover (D) , cover (E) , and cover (F) to remove the maintenance cover.

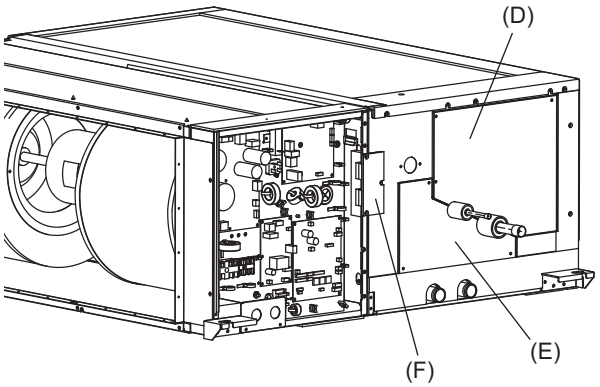

Fig.4

3. Removing the thermistor

(1) Disconnect the connector (CN44) from the Indoor controller board.

(2) Remove the thermistor (G) from the thermistor holder (H)on the copper tube.

Thermistor size
Liquid pipe: ø8mm
Gas pipe: ø6mm

4. Removing the LEV

(1) Disconnect the connectors (CN60 and CN7V) from the Indoor controller board.

(2) Remove the drive motor (J) using two spanners.

(3) When replacing the valve body (K), protect the surrounding parts (e.g., insulation and wires) from brazing torch flame.

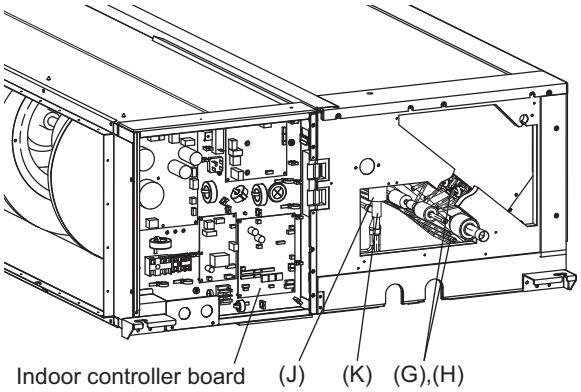

Fig.5

4. Drainpan

Exercise caution when removing heavy parts.

1. Removing the bottom plate

(1) Remove the twelve fixing screws on the bottom plate (L) to remove it.

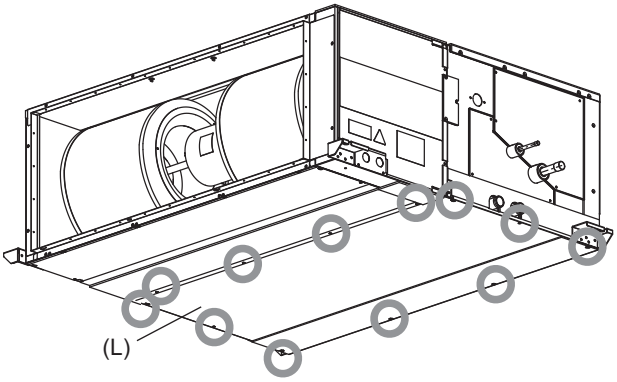

Fig.6

2. Removing the drainpan

(1) Pull out the drain pan (M) in the direction of the arrow.

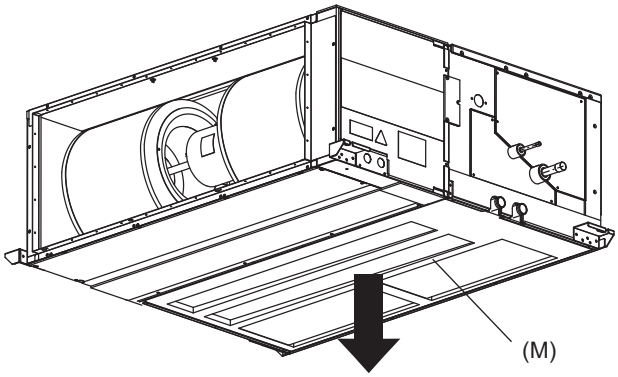

Fig.7

Note

♦Drain the water out of the drain pan before removing it.

5. Heat exchanger

Exercise caution when removing heavy parts.

1. Remove the control box cover according to the procedure in section **1. Control box**.

2. Remove the maintenance cover according to the procedure in section **3. Thermistor (Gas pipe) (Liquid pipe) · LEV**.

3. Remove the thermistor and disconnect LEV connector according to the procedure in section **3. Thermistor (Gas pipe) (Liquid pipe) · LEV**.

4. Remove the drainpan according to the procedure in section **4. Drainpan**.

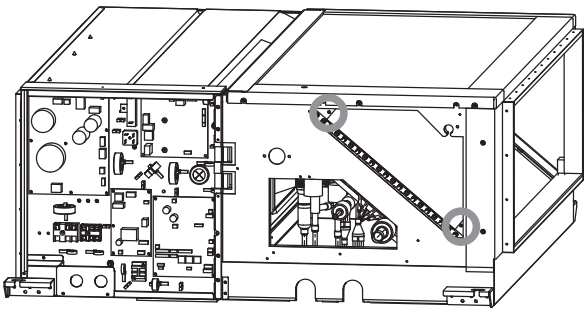

Fig.8

5. Removing the Heat exchanger

(1) Remove the four fixing screws on the heat exchanger (N) to remove it.

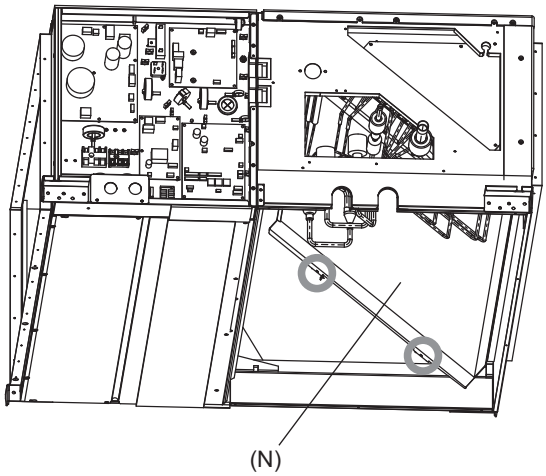

Fig.9

6. Reactor, fan, and fan motor

Exercise caution when removing heavy parts.

1. Remove the control box cover according to the procedure in section **1. Control box**.

2. Removing the fan motor and ACL cable
(1) Disconnect the connector (CNCT1) from the INV board and connector (CNACL) from the noise filter board. Then, disconnect the relay connector.
(2) Remove the ground wire on the motor from the white connector.
(3) Remove the cable through the rubber bush.

3. Removing the bottom plate
(1) Remove the ten fixing screws on the bottom plate (T) to remove it.

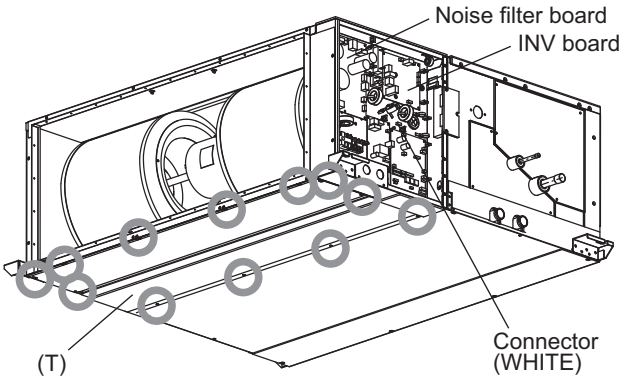

Fig.10

4. Removing the wiring
(1) Remove a screw that is used to connect the wiring.

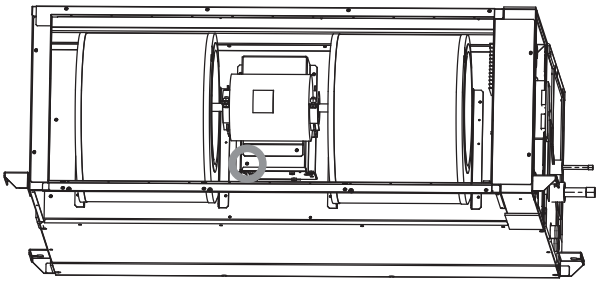
Fig.11

5. Removing the reactor
(1) Remove the two fixing screws on the reactor base (U) to remove it.

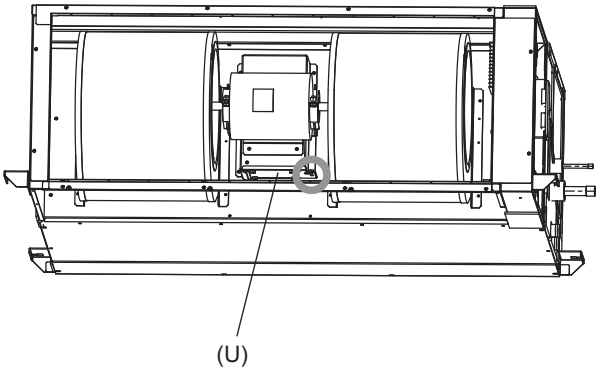

Fig.12

6. Removing the fan case
(1) Remove the eight fixing screws on the fan case (V) to remove it.

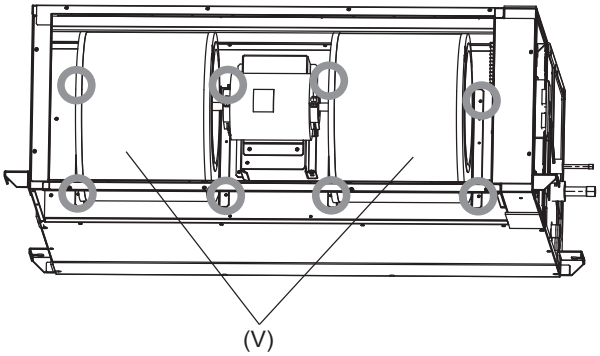

Fig.13

Exercise caution when removing heavy parts.

7. Removing the fan and fan motor
(1) Remove the two fixing screws and attachment on the fan motor (W).
(2) Pull out the fan motor in the direction of the arrow.

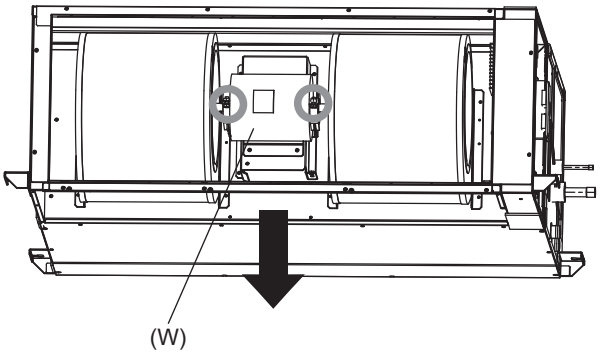

Fig.14

[10] Optional parts

Drain pump	PAC-KE05DM-F
Long-life filter	PAC-KE85LAF
Filter box	PAC-KE250TB-F
External heater adaptor	PAC-YU25HT

MITSUBISHI ELECTRIC TRANE HVAC US LLC

HEAD OFFICE: 1340 SATELLITE BLVD, SUWANEE GA 30024 USA

HWE1852A

New publication effective Nov. 2021
Specifications subject to change without notice