2109876H65903

English

Lossnay Energy Recovery Ventilator

MODELS:

TLGHF0300RVX02A / LGH-F300RVX2-E (F300R)
TLGHF0380RVX02A / LGH-F380RVX2-E (F380R)
TLGHF0470RVX02A / LGH-F470RVX2-E (F470R)
TLGHF0600RVX02A / LGH-F600RVX2-E (F600R)
TLGHF0940RVX02A / LGH-F940RVX2-E (F940R)
TLGHF1200RVX02A / LGH-F1200RVX2-E (F1200R)

Installation Instructions (For use by dealer/contractor)

Models F300R to F600R

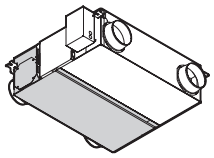

Models F940R and F1200R

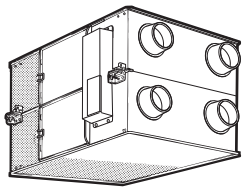

Contents

1. Safety precautions.....1
2. Outline drawings.....3
3. Standard installation examples.....4
4. Installation method 4
5. Function settings 14
6. Check points after installation work.....28
7. Trial operation.....29

This product needs to be installed properly in order to ensure maximum functionality as well as safety.
Please make sure to read this installation manual before starting the installation.

- Installation must be performed by a dealer or installation contractor. Please note that improper installation may cause malfunction or accident.

"Operating Instructions" and this manual must be handed over to the customer after completing the installation.

1. Safety precautions

The following signs indicate that death or serious injury may be caused by failure to heed the precautions described below.

⚠ WARNING

Do not disassemble	**Do not modify or disassemble.** (It could cause fire, electric shock or injury.)	The instructions given must be followed.	**Wiring work must be performed by qualified professionals, and be implemented safely and securely in accordance with the engineering standards and the extension wiring rules for electrical equipment.** (Poor connection or improper wiring work could cause electric shock or fire.) **Install a power supply isolator at the power supply side as per local electrical regulations. All supply circuits must be disconnected before obtaining access to the terminal devices. Use the specified cable size and connect the cables securely to prevent disconnection when they are pulled.** (If there is a defect in the connection, there is a possibility of fire.) **Select an adequate place for the opening to introduce outdoor air, where it will not intake the exhaust fumes like combustion gas, or others, and there is no risk of blockage.** (Shortage of fresh air could put the room in a state of oxygen deficiency.) **A duct made of steel must be installed with care not to be connected electrically with metal, wire, stainless steel plate, or others.** (It could cause fire when power leakage occurs.) **Not suitable for use with solid-state speed controls.**
Prohibition of use in bath or shower room	**The Lossnay unit and remote controller should not be installed where it is highly humid, like a bathroom, or other wet place.** (It could cause electric shock or power leakage.)		
Connect the grounding wire.	**Connect the product properly to ground.** (Malfunctioning or power leaks can cause electrical shock.)		
The instructions given must be followed.	**Use the specified power supply and voltage.** (Use of incorrect power supply or voltage could cause fire or electric shock.) **Select a place with sufficient strength and install the main unit securely.** (It could cause injury if it falls.)		

⚠ CAUTION

Prohibited	**Do not place a burning appliance in a place where it is exposed directly to the air from the Lossnay unit.** (It could cause an accident as a result of incomplete combustion.) **Do not use at a place where it is exposed to high temperatures (104 ˚F (40 ˚C) or higher), naked flames, or in environment with combustible fumes.** (It could cause fire.) **Do not use in an environment such as a chemical factory, where hazardous gases such as acidic gases, alkaline gases, organic solvent fumes, paint fumes, or gases containing corrosive components are generated.** (It could malfunction.) **Do not install this product in a place where it is exposed to ultraviolet light.** (UV may damage covering insulation.) **Do not install in a cooking area or connect directly to any appliance.**	The instructions given must be followed.	**Always use the specified suspension bolts, nuts and washers or correctly rated wire / chain hangers.** (Use of hardware with insufficient strength could result in the product dropping.) **The outside ducts must be tilted at a gradient (1/30 or more) down toward the outdoor louvres from Lossnay, and properly insulated.** (The entry of rain water may cause power leakage, fire, or damage to household property.) **The control box cover must be closed after the installation.** (Dust or humidity may cause power leakage or fire.) **When connecting external devices (electric heater, damper, lamp, monitoring unit, etc.) using output signals of the Lossnay unit, make sure to install safety equipment for the external devices.** (It could cause fire, damage, etc. without safety equipment.) **Select a duct heater in compliance with local and national laws, ordinances, and standards.** **Select a duct heater that meets adequate standard in each country.** **Install the duct heater separated from the product by a distance of 2.2 yd (2 m) or more.** (Failure to do so may result in fire or equipment damage due to the transmission of residual heat from the heater.)
The instructions given must be followed.	**Put on gloves during installation.** (It could cause injury.) **Make sure the power supply isolator is turned off on the power distribution panel when Lossnay is not used for a long period of time after the installation.** (It could cause electric shock, power leakage, or fire as a result of deteriorated insulation.)		

CAUTION

- **When using the product where it is exposed to high temperatures and humidity (104 ˚F (40 ˚C) or higher, RH 80% or higher), or where fog occurs frequently, moisture is likely to condense in the core, and may result in condensation build up in the unit. The product should not be used under such conditions.**
- **Outdoor air may enter the Lossnay owing to the pressure difference between indoor and outdoor or external winds even when the product is not operated. It is recommended to install an Electrically operated damper to block the outdoor air.**
- **In a cold weather area where outdoor temperature becomes lower than 23 ˚F (-5 ˚C), an area with strong external winds or where fog occurs frequently, cold outdoor air, external winds or fog may be introduced into the product when its operation is stopped. It is recommended to install an Electrically operated damper.**
- **When using the product in an environment where there is a window, or opening near the outdoor louvre , where insects are likely to gather around the interior or exterior light , take note that small insects may intrude into the product.**
- **In a cold weather area, or others, dewing or freezing could occur on the main unit, where the duct is connected, or other sections, depending on the conditions of outdoor air and indoor temperature and moisture, even if they are within the range of operating conditions. Make sure to confirm the operating conditions and other precautions, and do not use the product if dewing or freezing is anticipated.**
  *Example of dewing condition - Outdoor air: 23 ˚F (-5 ˚C) or lower, dew-point temperature at installation place: 50 ˚F (10 ˚C) or higher (When the indoor temperature is 71.6 ˚F (22 ˚C) or higher with the relative humidity higher than 50%, or other)
- **Do not transfer and keep the product at vertical position.**

2. Outline drawings

F300R to F600R

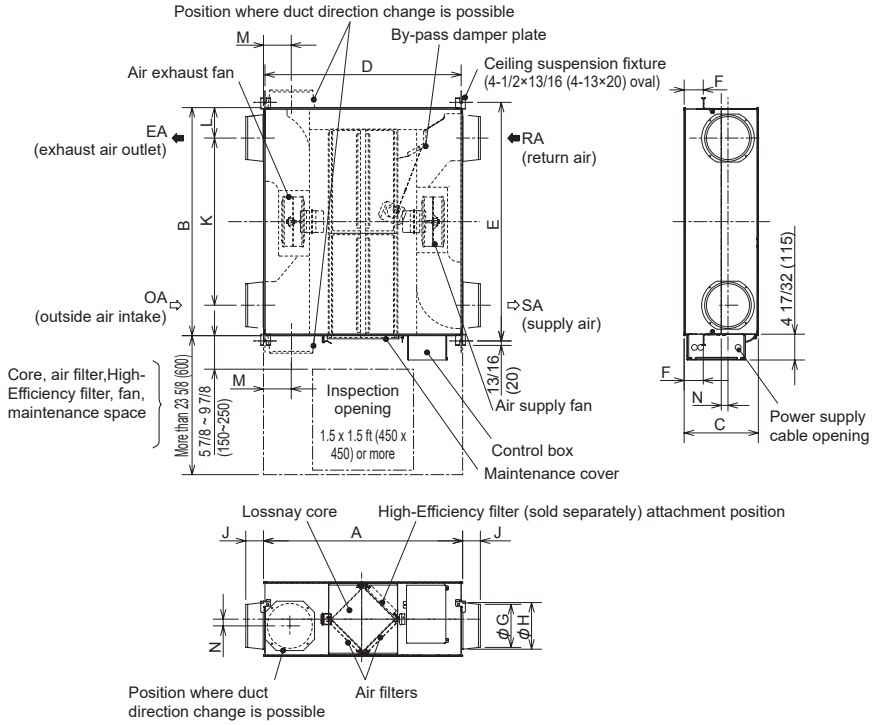

Accessory parts

- Mounting small screws for duct flanges x16

- Mounting large screws for ceiling suspension fixture.....x4

- Duct connecting flanges x4

- Screw cap.....x6

- Slim-Lossnay connection cable (gray: two wires) x1

Unit: Inch (mm)

Model	Dimensions			Ceiling suspension fixture pitch			Nominal diameter	Duct connecting flange			Duct pitch				Weight lbs (kg)
	A	B	C	D	E	F		G	H	J	K	L	M	N	
TLGHF0300RVX02A / LGH-F300RVX2-E (F300R)	34 15/16 (888)	40 (1016)	13 1/32 (331)	34 1/2 (875)	41 7/8 (1063)	3 11/32 (85)	7 7/8 (200)	7 9/16 (192)	8 3/16 (208)	3 1/8 (79)	29 3/8 (745)	5 5/16 (135.5)	4 7/8 (124)	1 3/16 (30)	75 (34)
TLGHF0380RVX02A / LGH-F380RVX2-E (F380R)	35 3/4 (908)	37 9/16 (954)	15 29/32 (404)	35 15/64 (895)	39 13/32 (1001)	2 3/4 (70)	7 7/8 (200)	7 9/16 (192)	8 3/16 (208)	3 1/8 (79)	27 1/4 (692)	5 5/32 (131)	4 7/8 (124)	0	90 (41)
TLGHF0470RVX02A / LGH-F470RVX2-E (F470R)	45 1/16 (1144)	39 1/2 (1004)	15 29/32 (404)	44 17/32 (1131)	41 3/8 (1051)	3 1/32 (77)	9 7/8 (250)	9 1/2 (242)	10 3/16 (258)	3 1/8 (79)	27 3/16 (690)	6 3/16 (157)	6 1/2 (165)	1 37/64 (40)	110 (50)
TLGHF0600RVX02A / LGH-F600RVX2-E (F600R)	45 1/16 (1144)	48 1/2 (1231)	15 29/32 (404)	44 17/32 (1131)	50 5/16 (1278)	3 1/32 (77)	9 7/8 (250)	9 1/2 (242)	10 3/16 (258)	3 1/8 (79)	36 1/8 (917)	6 3/16 (157)	6 1/2 (165)	1 37/64 (40)	123 (56)

F940R and F1200R

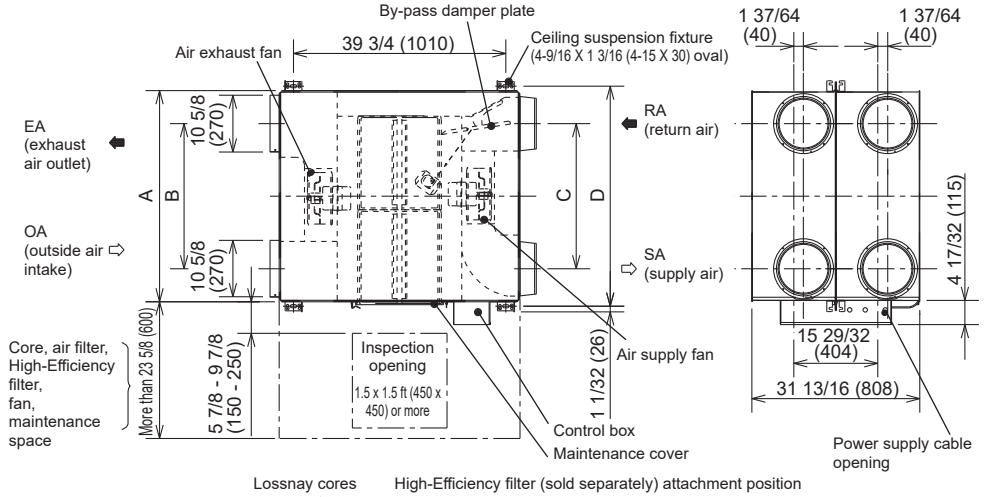

Accessory parts

- Mounting small screws for duct flanges x16

- Duct connecting flanges x4

- Screw cap.....x6

- Slim-Lossnay connection cable (gray: two wires) x1

Unit: Inch (mm)

Model	A	B	C	D	Weight lbs (kg)
TLGHF0940RVX02A / LGH-F940RVX2-E (F940R)	39 1/2 (1004)	27 3/16 (690)	27 3/16 (690)	41 9/64 (1045)	225 (102)
TLGHF1200RVX02A / LGH-F1200RVX2-E (F1200R)	48 1/2 (1231)	36 1/8 (917)	36 1/8 (917)	50 1/8 (1272)	251 (114)

3. Standard installation examples

- Duct length

Model	Distance
F300R and F380R	3.3 ft (1 m) or more
F470R and F600R	8.2 ft (2.5 m) or more
F940R and F1200R	9.8 ft (3 m) or more

- The parts can also be installed upside down. Remove the maintenance cover, rotate the parts by 180°, and re-install.

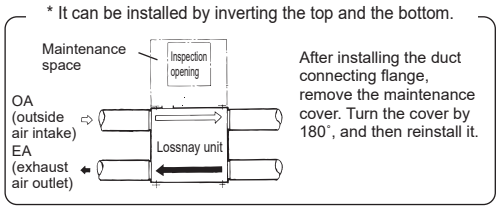

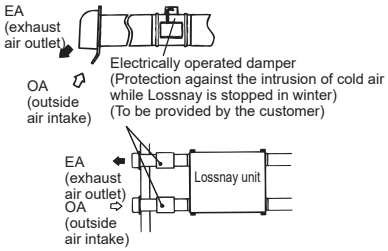

- In a region where there is risk of freezing in winter, it is recommended to install an electrically operated damper, or the like, in order to prevent the intrusion of (cold) outdoor air while Lossnay is stopped.

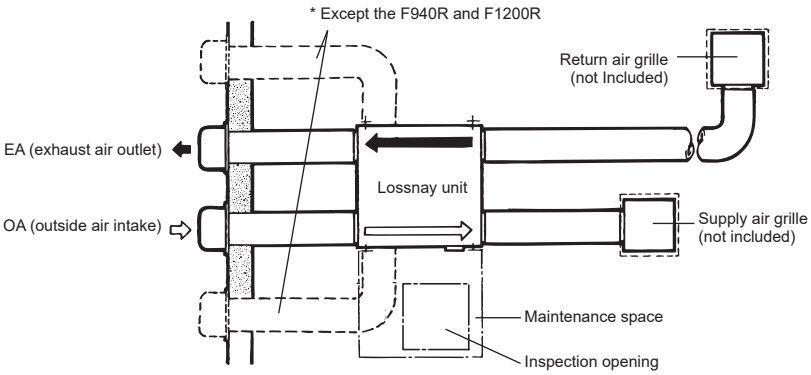

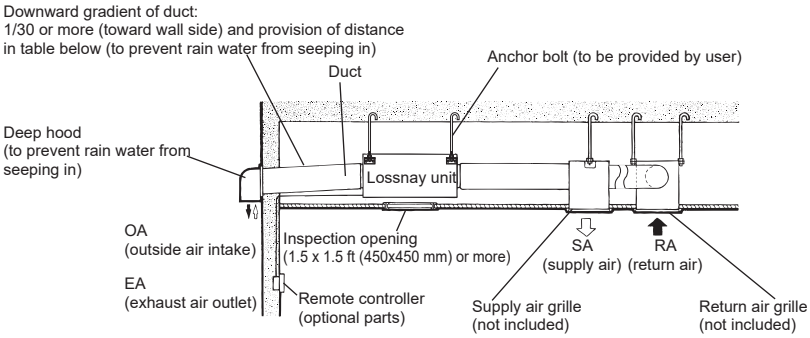

⚠ CAUTION

- Do not install Lossnay unit vertically or on an incline.

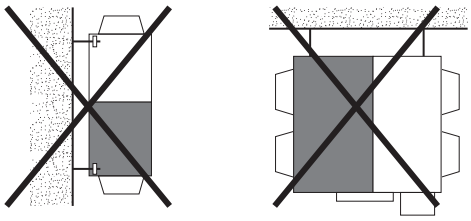

4. Installation method

4.1 Hanging the Lossnay unit

4.1.1 Attaching the duct connecting flanges

Use the supplied small screws to secure the duct connecting flanges to the Lossnay unit.

Models F300R to F600R

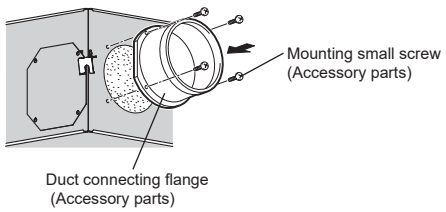

Models F940R and F1200R

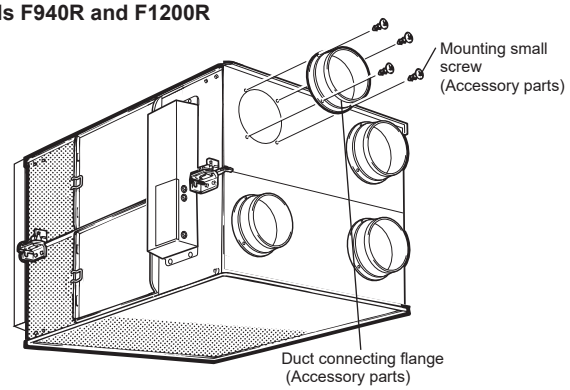

⚠ CAUTION

- **Before attaching the duct connecting flanges, check that no foreign matter (scraps of paper, vinyl, etc.) has found its way inside to Lossnay unit.**
- **Attach the duct connecting flanges with the packing at the SA and RA sides.**
- **Alway use accessory screws. Otherwise the screw may interfere internal parts and result abnormal operation.**

4.1.2 Securing the ceiling suspension fixtures

Models F300R to F600R

(1) Loosen the screws for the ceiling suspension fixtures.
(2) Rotate the ceiling suspension fixtures 90° centered around the loosened screws to make them horizontal.
(3) Firmly tighten and secure the ceiling suspension fixtures to the product with the loosened screws and the included mounting large screws.

* The ceiling suspension fixtures are folded and secured to the unit when shipped from the factory.

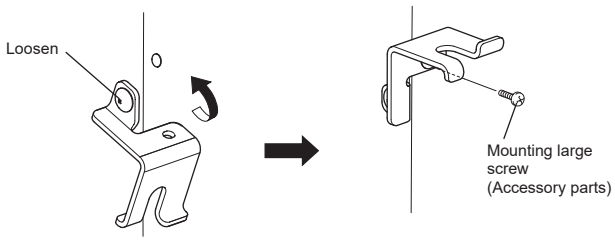

4. Installation method (continued)

4.1.3 Preparing the anchor bolts

Mount the washers (outer diameter of >13/16 inch for 3/8-16 UNC (21 mm for M10) >15/16 inch for 7/16-14 UNC (24 mm for M12) and nuts onto the pre-recessed anchor bolts (3/8-16 or 7/16-14 UNC (M10 or M12)), as shown in the figure below .

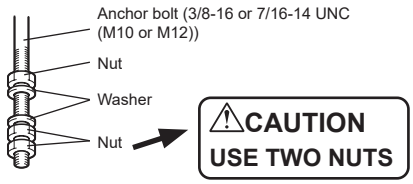

[When using (customer-prepared) vibration isolation rubber]
When using (customer-prepared) vibration isolation rubber, there is a possibility of this causing a decrease in strength, so we recommend the following type of construction.

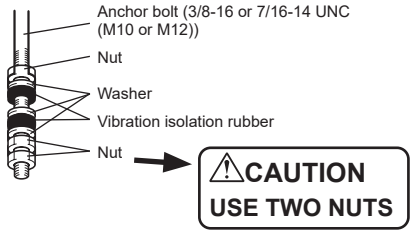

4.1.4 Mounting Lossnay unit

(1) Hang the ceiling suspension fixtures on the anchor bolts and adjust in such a way that Lossnay unit is level.
(2) Tighten up securely using double nuts.

Models F300R to F600R

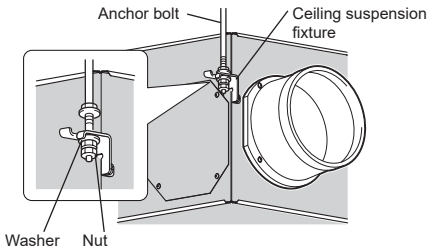

Models F940R and F1200R

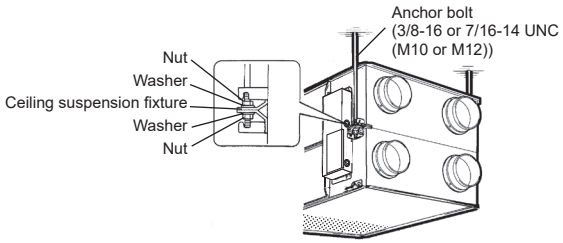

⚠ CAUTION

- **When suspending Lossnay unit from the ceiling, do not handle it in such a way that force will be applied to the control box.**
- **Install the anchor bolts to ensure the product's weight or earthquake load. (Correctly rated wire/chain may also be used)**

4.2 Duct works

4.2.1 Connecting the ducts

(1) Fasten the duct securely to the duct connecting flange, and wrap aluminium tape (field supply) around the joints so that there is no air leakage.
(2) Suspend the ducts from the ceiling so that their weight will not be applied to the Lossnay unit.
(3) The two outdoor ducts must be covered with heat-insulating material in order to prevent condensation from forming.

Models F300R to F600R

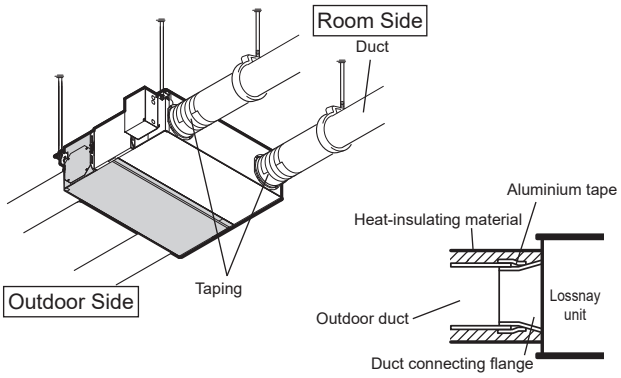

Models F940R and F1200R

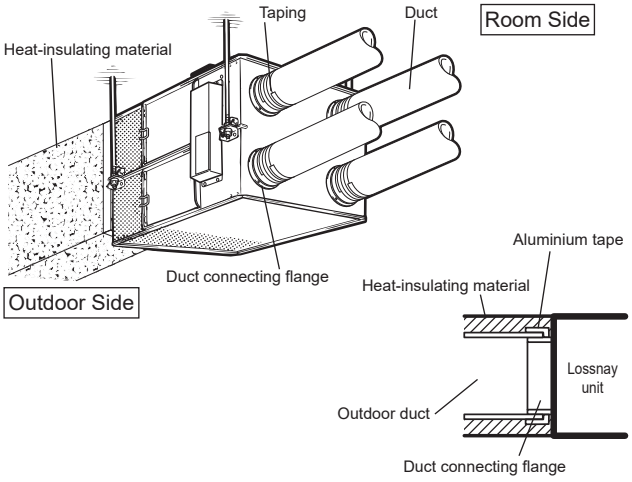

⚠ CAUTION

- **When the supply air is set twice as much as the exhaust air or more by airflow function, the Lossnay body indoor side must be put additional insulation. Without additional insulation, it could cause condensation and water drop from the unit.**
- **When on-site commissioning is planned, a straight duct length more than 10xD (D=duct diameter) from the source of turbulence like bends, contractions and dampers etc, to the measurement point is recommended for correct measurement. In the United Kingdam, on-site measurment should therefore be measured in accordance with BSRIA guideline (Commissioning Air System. Application procedures for buildings AG3/89.3(2001))**
- **Before attaching the ducts, check that no (debris or any other) foreign matter (scraps of paper, vinyl, etc.) has found its way inside the ducts.**
- **Do not touch the damper plate inside Lossnay unit when connecting the ducts.**
- **If it is expected that the ambient temperature around the place where the Lossnay unit is installed will be high during the summer air conditioning season, it is recommended that the indoor duct work be covered with insulation material.**

- **For F940R and F1200R, thermistors are built only in the lower unit. Lossnay unit controls its operation according to the lower unit detecting temperature. Even when actual return air temperature between the upper and the lower unit is different, Lossnay operates according to the lower unit temperature.**

Do not carry out the following types of duct construction. (Doing so could cause a drop in the air volume and generate abnormal noises.)

- Extremely sharp bends
- Multiple bends
- Bends right next to the outlet
- Extreme reduction in the diameter of the connected ducts

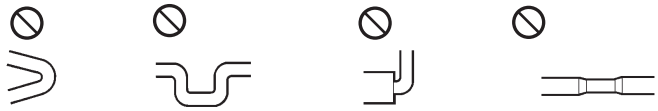

4.2.2 When changing the direction of the out door side duct (EA/OA) …Except for F940R and F1200R

(1) Removal of flange cover

Unscrewing the flange cover mounting screws (4 pcs), remove the flange cover.

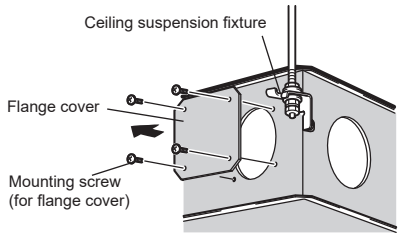

(2) Installation of duct connecting flange

1. Install the duct connecting flange using attached mounting screws.
2. Fix the removed flange cover with the removed mounting screws (4 pcs).

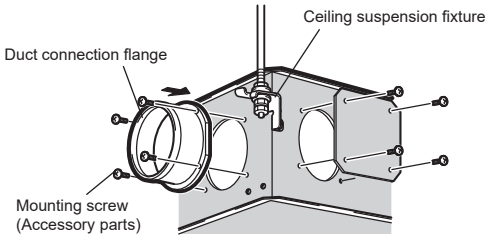

4.3 Electrical installation

With this product, the wiring installation method will vary according to the design of the system.
Perform electrical installation to meet local electrical regulations.
* Always use double insulated PVC cable for the transmission cables.
* Wiring work must be performed by qualified professionals.
* All supply circuits must be disconnected before obtaining access to the terminal devices.

Names of components in control box

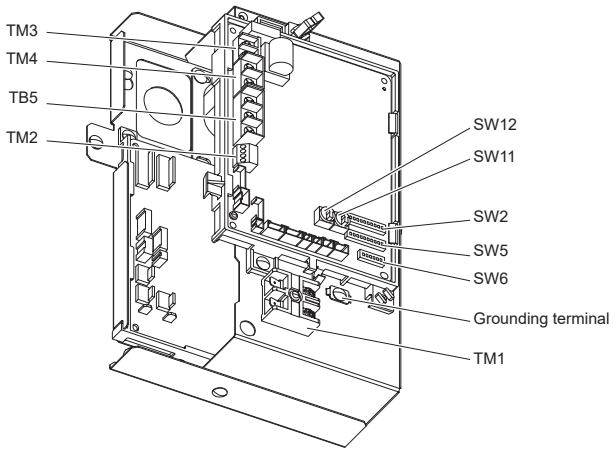

⚠ CAUTION

- **Do not pull out preconnected connectors unnecessarily during installation.**

4. Installation method (continued)

Wire connection diagram

* TM1, TM2, TM3, TM4, TB5 shown in dotted lines are field work.
* Be sure to connect the ground wire.
* A power supply isolator must be installed.
* Always use an isolator for the main switch power connection.
* Select proper circuit breaker according to the electrical current information in the chart below.
* Do not disconnect connectors.

Model		TLGHF0300RVX02A LGH-F300RVX2-E (F300R)	TLGHF0380RVX02A LGH-F380RVX2-E (F380R)	TLGHF0470RVX02A LGH-F470RVX2-E (F470R)	TLGHF0600RVX02A LGH-F600RVX2-E (F600R)	TLGHF0940RVX02A LGH-F940RVX2-E (F940R)	TLGHF1200RVX02A LGH-F1200RVX2-E (F1200R)
Maximum current when operating [A]		3.40	3.10	4.05	4.15	8.10	8.30
Inrush current after power supply ON [A]	10 ms	6.1				12.2	
	100 ms	3.6				7.2	

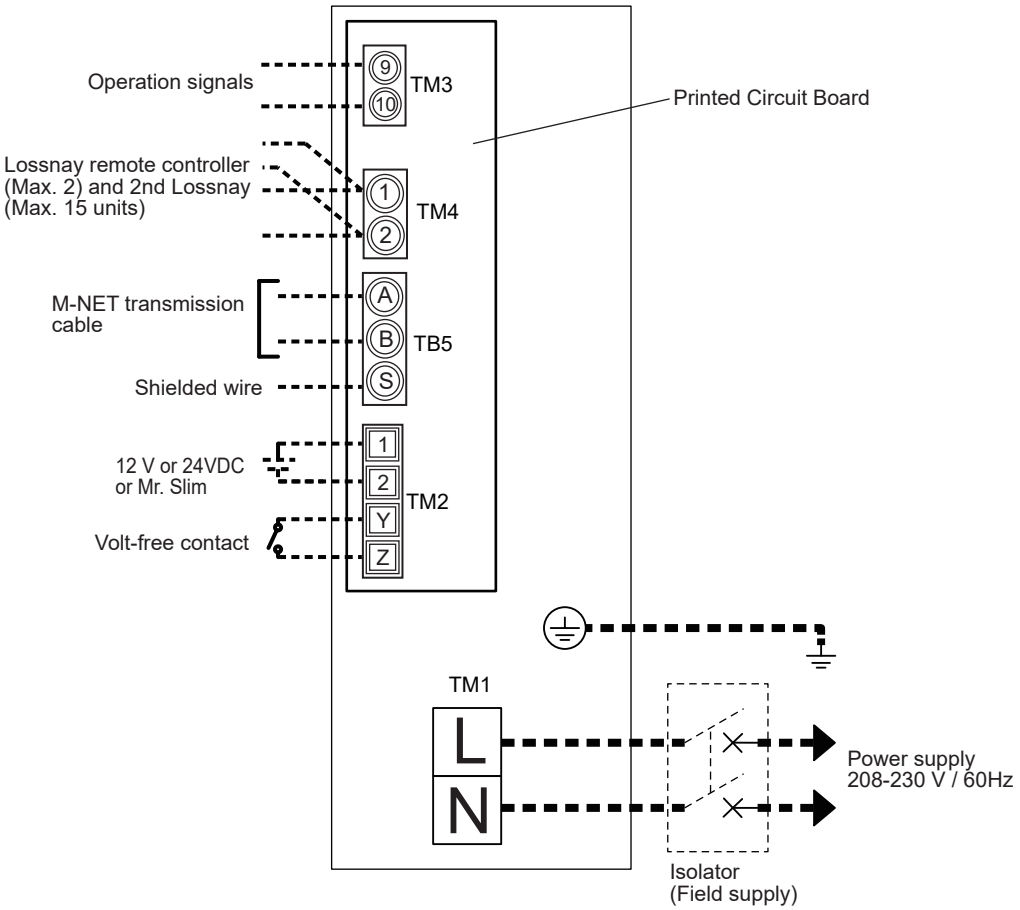

TM1: Terminal block (Power supply)
TM2: Terminal block (External control input)
TM3: Terminal block (Monitor output)
TM4: Terminal block (Transmission cable)
TB5: Terminal block (M-NET transmission cable)

4.2.3 Connecting the power supply cable

(1) Remove the black screws and the control box cover

Models F300R to F600R

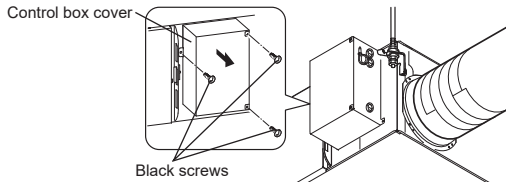

Models F940R and F1200R

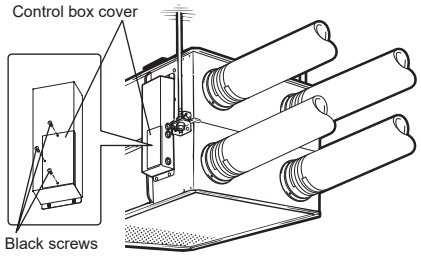

⚠ CAUTION

- **For F940R and F1200R, PZ-70CSB-E can be installed only in the lower unit. Lossnay unit controls its fan speed according to the lower unit detecting CO_2 concentration. Even when actual CO_2 concentration of the upper unit is high, Lossnay does not change its fan speed.**
- **When connecting PZ-70CSB-E with F940R and F1200R, remove whole PCB cover according to the picture below.**

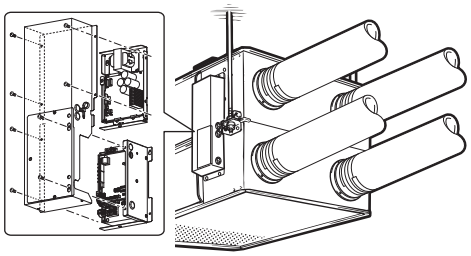

(2) Attach the screw cap.

Models F300R to F600R

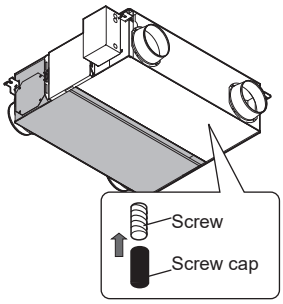

Models F940R and F1200R

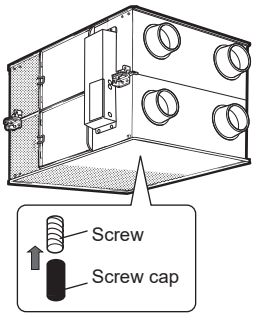

⚠ CAUTION

- **After installing the Lossnay unit, attach the supplied screw caps to the screws at the bottom of the unit.**

(3) Connecting the power supply cable and transmission cable

Pass the Power supply cable through the bush* and connect to the TM1 terminal block using the round terminals. Connect the ground wire to the ground terminal and secure tightening the bush. (* Use an item that can firmly secure the cable such as a cable gland.)

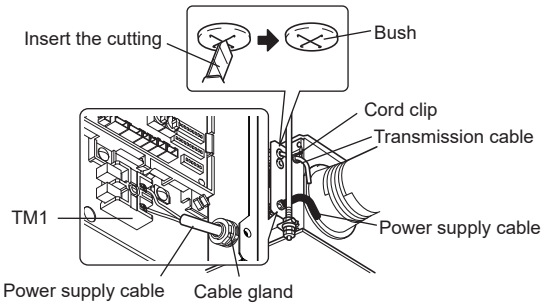

Be sure to tighten the ground wire to the grounding screw using the round terminals with anti spread washer.

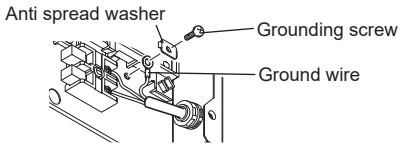

⚠ CAUTION

- **Always separate the power supply cable and transmission cable by 2” (5 cm) or more to prevent malfunctioning of the unit.**
- **If the length of the stripped Power supply cable is too long, the conductors may touch and short out.**
- **Power supply cable size : AWG 14 (2.1 mm^2) or more.**

(1) Tighten the ground wire and transmission cables to the terminal block.
(2) Secure the transmission cables using the cord clips.

Upon completion of the wiring connections, replace the control box cover.

The following system configuration can be created. Connect the necessary parts.

1 When connecting with remote controller (TZ-62DR-EA)
2 When interlocked with indoor unit of air conditioner or other external device including other manufactures
3 When operating multiple Lossnay units
4 Signal output from Lossnay unit
5 When switching fan speed externally (when a sensor or other device is connected)
6 When switching By-pass externally
7 To change fan speed by 0 - 10 VDC input
8 When using the remote/local switching and the ON/OFF input (level signal)
9 When connecting to the City Multi or Mitsubishi Electric Air-Conditioner Network System (MELANS)
10 To start/stop Lossnay stand-alone operation without using the remote control
11 Control via Wi-Fi interface or MELCOBEMS MINI
12 When connecting CO_2 sensor PZ-70CSB-E or PZ-70CSW-E

⚠ CAUTION

- **When connecting external devices (electric heater, damper, lamp, monitoring unit, etc.) using output signals of the Lossnay unit, be sure to install safety equipment for the external devices.**

  (It could cause fire, damage, etc. without safety equipment.)

1 When connecting with remote controller (TZ-62DR-EA)

* When controlling Lossnay units with MELANS, connect wires according to 9 .

Securely connect the transmission cable from the remote controller to ① and ② of the input terminal block (TM4). (No polarity)

Wire type: two-core sheathed cable
Wire diameter: AWG 22 (0.3 mm²)

- If there are two remote controllers, connect them in the same way.
- Keep the overall length of the transmission cable between Lossnay and the remote controller within 219 yd (200 m).

Note

- **Do not tighten screws of terminal block with a torque larger than 1.2 N·m. It could damage the circuit board.**
- **Take care not to connect the power supply cable or M-NET transmission cable.**
- **When connecting multiple cables to the terminal, use round terminal.**
- **Solid wire (single-stranded wire) cannot be connected.**
- **PZ-61DR-E is not available.**

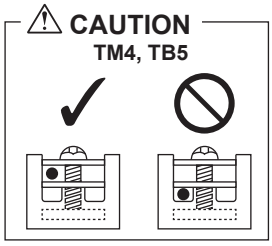

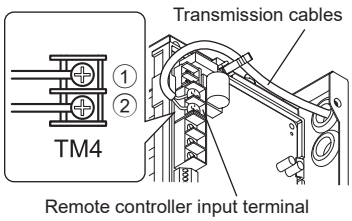

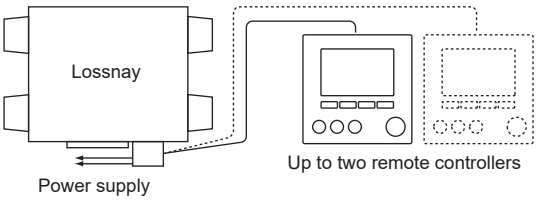

2 When interlocked with indoor unit of air conditioner or other external device including other manufactures

⚠ CAUTION

- **The connection may vary according to the output signal type of the external unit.**
- **Do not press the terminal with a force of more than 19.6 N when connecting the cable to TM2.**

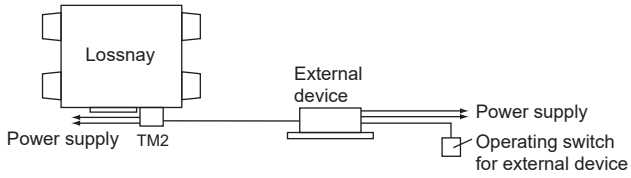

When using Mitsubishi Mr. Slim air conditioner with MA Remote controller

Confirm that the pulse input switch (SW2-2) is set to "OFF". (Factory setting is "OFF".) (Refer to function settings No. 28)
Connect the Slim-Lossnay connection cable connector side to CN2L on the circuit board for the Mr. Slim indoor unit, then connect the lead wire side to the ① and ② of the input terminal block (TM2) for the Lossnay external controller input. (No polarity)

- Always separate the power supply cable and the Slim-Lossnay connection cable by 2" (5 cm) or more to prevent the unit from malfunctioning.
- The Slim-Lossnay connection cable is 4" (10 cm) long. When wiring, extend it as far as necessary.

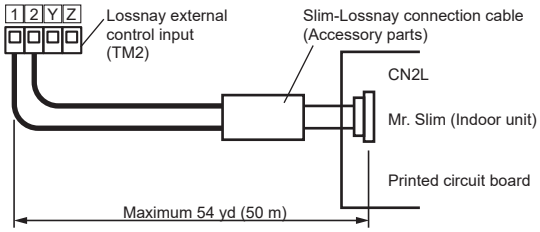

Note

- **Use MA remote controller of Mr. Slim for switching Lossnay ON/OFF or the fan speed.**
- **The ventilation mode is fixed to "automatic ventilation" from MA remote controller.**
- **Ensure that all connections are secure and that the appropriate insulation is provided.**
  Use extension cable sheathed PVC cable or cable AWG 20 (0.5 mm²) to AWG 15 (1.5 mm²).
- **Only one Lossnay and one Mr. Slim unit can be interlocked. Multiple units interlock is not possible.**
- **Lossnay can not be connected M-NET in this case.**

[SW2-2] setting vary depending on the types of output signal of external device.

When the external device has a charged operating signal of 12 VDC or 24 VDC

- If the input is pulse signal, move the pulse input switch [SW2-2] to the ON position. (Refer to function settings No. 28)
- When level signal is selected, the signal width has to be more than 10 seconds for ON and OFF .
- When pulse signal is selected, a pulse width has to be at least 200 m sec. to turn Lossnay ON, and 10 sec. interval is necessary to next output.
- The wiring should be as shown by the following picture.

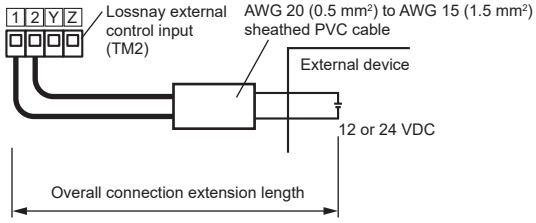

(Follow the operation manual for the external equipment.)

4. Installation method (continued)

When the external device has an Volt-free contact signal

- If the input is pulse signal, move the pulse input switch [SW2-2] to the ON position. (Refer to function settings No. 28)
- When level signal is selected, the signal width has to be more than 10 seconds for ON and OFF .
- When pulse signal is selected, a pulse width has to be at least 200 m sec. to turn Lossnay ON, and 10 sec. interval is necessary to next output.
- The wiring should be as shown by the following picture.

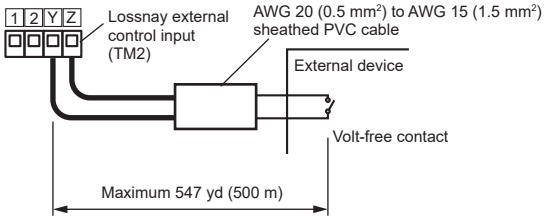

⚠ CAUTION

- **If an optocoupler or any other type of polar coupler is used at the Volt-free contact, connect the positive side to Y and the negative side to Z.**

3 When operating multiple Lossnay units

In the case that all Lossnay units are the same TLGHF**RVX02A/ LGH-FRVX2-E series, up to 15 multiple units can be operated at the same time.

1) Connect the Lossnay unit from Unit 1 to Unit 2, and from Unit 2 to Unit 3 and so on up to a maximum of 15 units using a transmission cable.
   Wire type: two-core sheathed cable
   Wire diameter: AWG 22 (0.3 mm2)
2) When it is interlocked with an external device, set the Lossnay unit which has external signal input to “Main”.

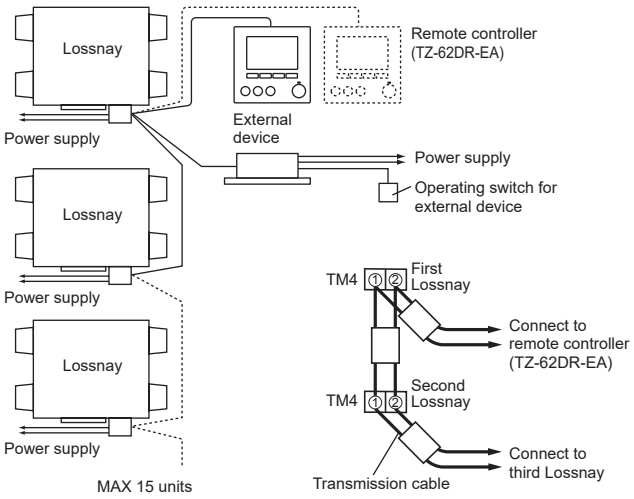

⚠ CAUTION

TM4, TB5

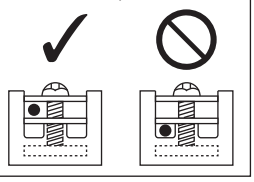

Note

- **Do not tighten screws of terminal block with a torque larger than 1.2 N·m. It could damage the circuit board.**
- **When connecting multiple cables to the terminal, use round terminal.**
- **Solid wire (single-stranded wire) cannot be connected.**
- **Only one unit can be set as main Lossnay. The operating signal and pulse signal of the external device can be connected to Main Lossnay only.**
- **Connect the power supply cable to each Lossnay unit.**
- **When setting the Lossnay address for use with a Mitsubishi Electric Air-Conditioner Network System (MELANS) etc., the Lossnay with the smallest address in the group will be the Main Lossnay. When not setting the address, set the address to “1” for only one unit in the group. The Lossnay with an address of “1” is the Main Lossnay. (Refer to “Setting the address” on the section 5 for more detail.)**

4 Signal output from Lossnay unit

Set DIP-SW or Function setting on TZ-62DR-EA as following table depending on the necessary output signal from Lossnay unit. For more information of signal output, see function settings No. 12 to No. 16.

DIP-SW setting		Function setting on TZ-62DR-EA		Signal output
SW5-1	SW5-2			
-	-	12	0	Dip-SW priority
OFF	OFF		1	Operation monitor
ON	OFF		2	Malfunction monitor
OFF	ON		3	By-pass monitor
ON	ON		4	Supply fan operation monitor
N/A	N/A		5	Exhaust fan operation monitor
N/A	N/A		6	Pre-heater signal output
N/A	N/A		7	After-heater signal output

- Do not tighten screws of terminal block with a torque larger than 0.5 N·m. It could damage the circuit board.
- When connecting multiple cables to the terminal, use round terminal.
- If multiple output signals are necessary, use optional signal output terminal (PZ-N4GS-E).

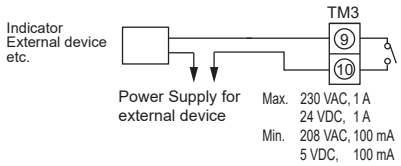

When using Pre-heater output signal, the wiring should be as shown by the following picture.

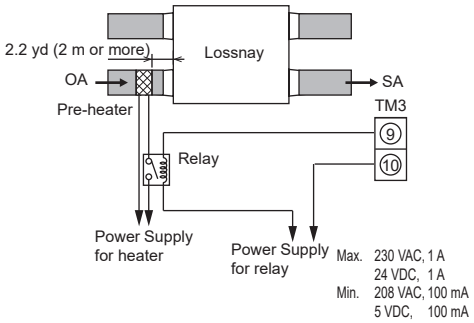

⚠ CAUTION

- **Failure to follow below instructions, it could cause a fire.**
- **Choose a OA pre-heater which can control the heater outlet air temperature even both the air flow is maximum and minimum. Otherwise it could fall the supply fan into intermittent operation.**
- **Select a duct heater in compliance with local and national laws, ordinances, and standards.**
- **Select a duct heater that is tested by a certification body.**
- **Always select a heater that is equipped with a non-self-resetting safety device.**
- **Do not directly supply power from the Lossnay unit to the duct heater. Doing so could cause fire.**
- **Install a circuit breaker for the duct heater in compliance with all applicable laws, ordinances, and standards.**

4. Installation method (continued)

- **Install the duct heater separated from the product by a distance of 2.2 yd (2 m) or more.**
  Failure to do so may result in equipment damage due to the transmission of residual heat from the heater.
- **Ensure that the duct heater and Lossnay are wired and that the Lossnay function settings have been configured, and then always check operation by trial operation.**
- **For the duct heater output, see function setting** No. 60 **and** No. 61 **.**

When using After-heater output signal, the wiring should be as shown by the following picture.

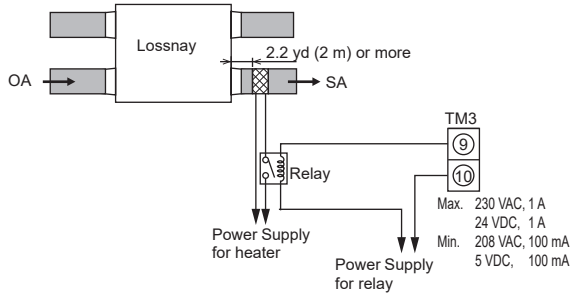

For the heater, observe the cautions listed in Pre-heater.

5 When switching fan speed externally (when a sensor or other equipment is connected)

Using a field supply sensor, etc., make connection by inserting the optional remote controller adapter (PAC-SA88HA-E or PAC-725AD) in the connector CN17 (Red) as shown by the figure.
Lossnay will operate at the fan speed following the table below, regardless of the remote controller setting.

CN17 (Red)	Fan speed
1-2 (Brown-Red)	4
1-3 (Brown-Orange)	3
1-4 (Brown-Yellow)	2
1-5 (Brown-Green)	1

■ **Example "Fan speed 4"**

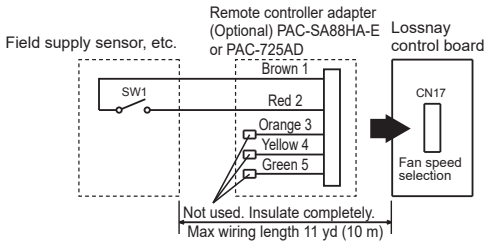

Use this in such a way that it ventilates at low fan speed normally, and when the external sensor detects contamination of indoor air, or SW1 is on, it changes to high fan speed operation.
When multiple Lossnay units are controlled by one input, TZ-62DR-EA is necessary.
The signal has to be inputted into main unit referring to 3.
Cannot be used in conjunction with the following functions:
- To change fan speed by 0 - 10 VDC input.
- Connecting CO_2 sensor PZ-70CSB-E or PZ-70CSW-E.

6 When switching By-pass externally.

Establish the wire connection by inserting the optional remote controller adapter (PAC-SA88HA-E or PAC-725AD) in the connector CN26 (White).

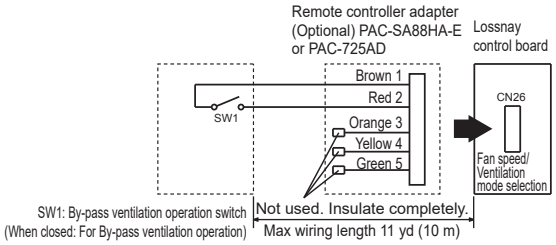

With SW1 is "ON", the ventilation mode of Lossnay is changed to the By-pass ventilation regardless of the setting on the remote controller.
When multiple Lossnay units are controlled by one input, TZ-62DR-EA is necessary.
The signal has to be inputted into main unit referring to 3.

* When the outdoor air temperature drops lower than 46˚F (8˚C), it changes to the heat recovery ventilation. (In this case, ventilation mode icon on the display of the remote controller does not change from the previous mode, it might be different from the actual unit operation.)

7 To change fan speed by 0 - 10 VDC input

Establish the wire connection by inserting the optional remote controller adapter (PAC-SA88HA-E or PAC-725AD) in the connector CN26 (White).

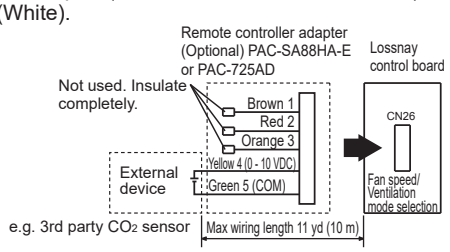

To change fan speed by 0 - 10 VDC input, the wiring should be as shown by the above picture. Refer to function settings No. 66 for more details.
When multiple Lossnay units are controlled by one input, TZ-62DR-EA is necessary.
The signal has to be inputed into main unit referring to 3.
Cannot be used in conjunction with the following functions:
- Switching fan speed externally (CN17).
- Connecting CO_2 sensor PZ-70CSB-E or PZ-70CSW-E.

⚠ CAUTION

- **Make sure of correct polarity.**
- **Do not apply voltages higher than 10 VDC.**

4. Installation method (continued)

8 When using the remote/local switching and the ON/OFF input (level signal)

Insert the optional remote ON/OFF adapter (PAC-SE55RA-E or PAC-715AD) in CN32 on the Lossnay control circuit board.
When multiple Lossnay units are controlled by one input, the signal has to be inputed into main unit referring to 3.

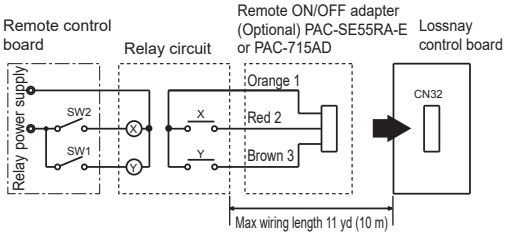

SW1: When this is ON, Lossnay cannot be turned ON/OFF by the Remote Controller (TZ-62DR-EA).
SW2: When SW1 is ON, Lossnay can be turned ON by setting SW2 at ON or turned OFF by setting SW2 at OFF.

SW1: Remote/local selector switch
SW2: ON/OFF switch
X, Y : Relay (Contact rated load: 0.1 A at 15 VDC or more, Minimum applicable load: 1 mA or less)

9 When connecting to the City Multi, Mitsubishi Electric Air-Conditioner Network System (MELANS)

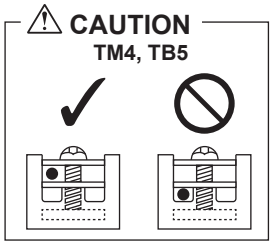

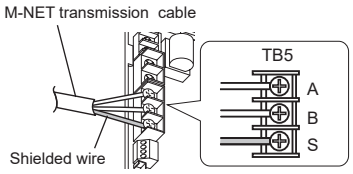

- Connect a shielded wire to terminal TB5 Ⓢ on the circuit board. Address setting is required. (Refer to function setting section.)
  M-NET transmission cable: Connect any of the City Multi indoor unit, or Mitsubishi Electric Air-Conditioner Network System (MELANS) - to the Lossnay.
- Remote Controller
  TZ-62DR-EA:
  Connect to TM4 ①, ② on the circuit board. (See Section 1 "When connecting with remote controller (TZ-62DR-EA)".)
- Securely connect the M-NET transmission cables to TB5 ⒶⒷ. (No-Polar)
  Type: Two-core shielded wire (CVVS/MVVS)
  Wire diameter: AWG 16 (1.25 mm^2)

⚠ CAUTION

- **Do not tighten screws of terminal block with a torque larger than 1.2 N·m. It could damage the circuit board.**
- **Always use shielded wires only for the M-NET transmission cables, and finish the shield properly.**
- **Be sure to cut M-NET power supply during Lossnay wiring, otherwise it causes malfunction.**

When interlocking with Mitsubishi M-NET air conditioner

- Incase of TZ-62DR-EA

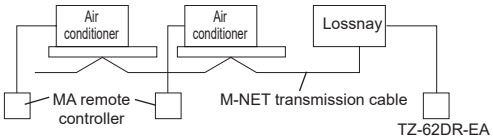

When connecting to TZ-62DR-EA and MELANS

- Connect the power feeding unit.

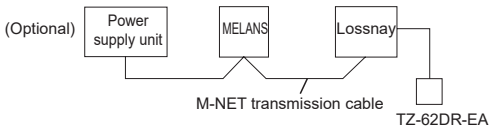

* Limit the total length of transmission cables no longer than 547 yd (500 m). Limit the wiring length between Lossnay and the power supply unit (Optional) or the outdoor unit no longer than 219 yd (200 m).

Note

- **TLGHF**RVX02A/LGH-FRVX2-E series Lossnay can NOT be set as the same group with other series Lossnay such as TLGHF**RVX01A/LGH-FRVX-E series.**

10 To start/stop Lossnay stand-alone operation without using the remote control

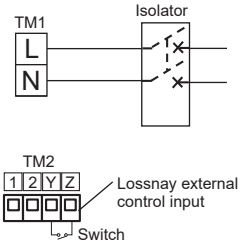

Start/stop the unit by a switch connected to TM2 Y Z.
When turned the unit ON, it operates at fan speed 4 and automatic ventilation mode.

⚠ CAUTION

- **Do not start/stop the unit by turning the power supply to the unit ON/OFF.**

4. Installation method (continued)

11 Control via Wi-Fi interface or MELCOBEMS MINI

Connect the lead wire of a Wi-Fi interface or MELCOBEMS MINI to CN105 (Red) on circuit board of Lossnay unit.

Regarding the model name of the connectable Wi-Fi interface or MELCOBEMS MINI, please contact the sales company in your market.

⚠ CAUTION

1. For the installation of the Wi-Fi interface, there are some precautions. Refer to the Installation manual of the Wi-Fi interface for more details.
2. After the installation, be sure to do a test run prior to the start of actual operations.
3. Follow the system configuration examples listed below.

Basic system

Lossnay remote controller (TZ-62DR-EA) or M-NET remote controller is necessary.

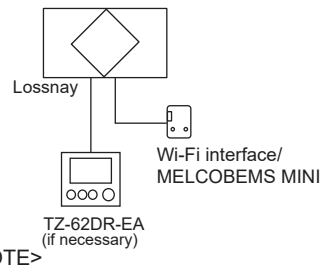

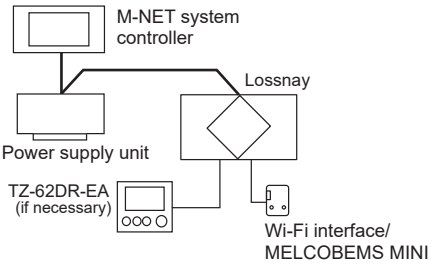

PZ-43SMF-E cannot be used with CN105 connection.

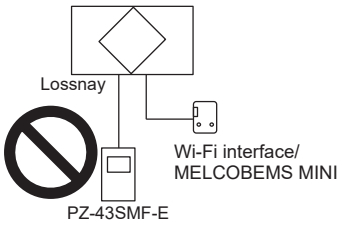

<NOTE>
The operation by pushing the controller button lastly has a priority.
Do NOT use “remote controller ON/OFF prohibition” function on system controller.

Multiple unit operation

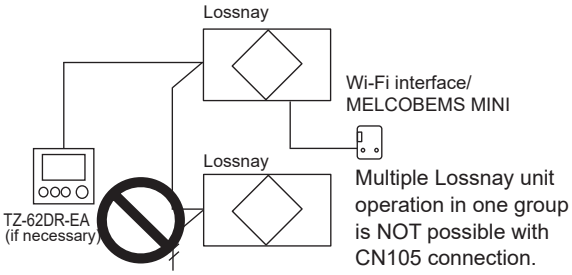

Set one Lossnay unit which is connected Wi-Fi interface or MELCOBEMS MINI as one group.

M-NET system

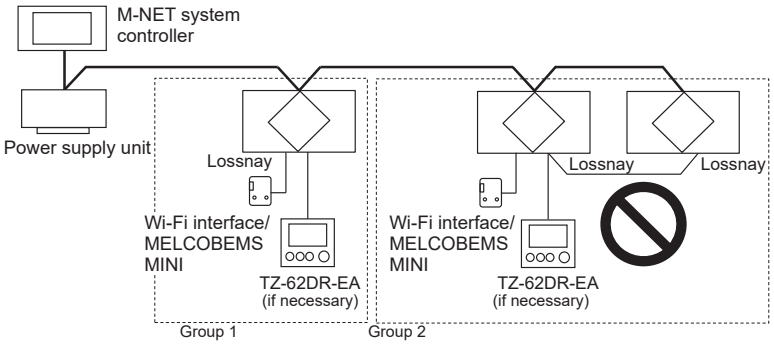

Set one Lossnay unit which is connected Wi-Fi interface or MELCOBEMS MINI as one group. Do NOT make a group of multiple Lossnay units when using CN105 connection.

System controller	Prohibit remote controller	Do NOT use “remote controller ON/OFF prohibition” function on system controller.
External control	ON/OFF switching by CN32	NOT available with CN105 connection control.
	External fan speed control (CN17, CN26)	The unit follows external input signal. Therefore, the fan speed selection through CN105 connection control become invalid.
	External Bypass control (CN26)	The unit follows external input signal. Therefore, the ventilation mode selection though CN105 connection control become invalid.
Interlocking	Interlock with Mr. Slim	Interlocking with Mr. Slim unit by Slim-Lossnay connection cable (CN2L-TM2①② connection) is NOT possible.
	Interlock mode setting	Only “ON/OFF interlock mode” is available. Please set function No. 19 as 0 on TZ-62DR-EA (factory setting).

12 When connecting CO_2 sensor PZ-70CSB-E or PZ-70CSW-E

Connect and install correctly by following the installation manual of PZ-70CSB-E or PZ-70CSW-E.

5. Function settings

Address setting is required when connecting to City Multi and MELANS.

Setting the address

Use the following procedure when setting the address for dedicated Lossnay.
(The method in determining the addresses will depend on the existing system. Refer to the appropriate technical documents for details.)
(1) Remove the control box cover.
(2) Turn the address setting switch on the circuit board.
- SW12 indicates the tens digit and SW11 indicates the ones digit.
- The factory setting is “00”.

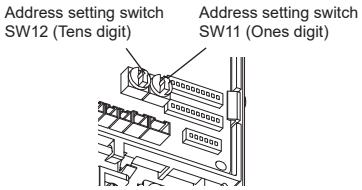

* When the address number has been changed, the data in the memory is automatically reset.

Changing the function selection switches (SW-2, 5 and 6)

Set the selection switches (SW-2 and 5) to perform the appropriate function.
* All function except “Trial operation” and “Auto fan speed setting without Lossnay or M-NET remote controller” can be set also from the remote controller (TZ-62DR-EA). If the function is switched later using the remote controller, it operates according to the setting on the remote controller.

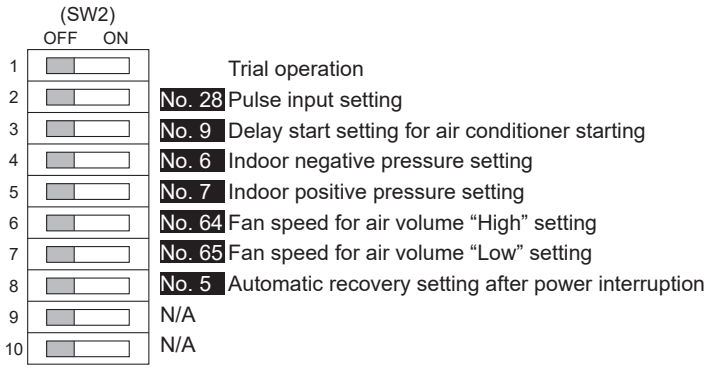

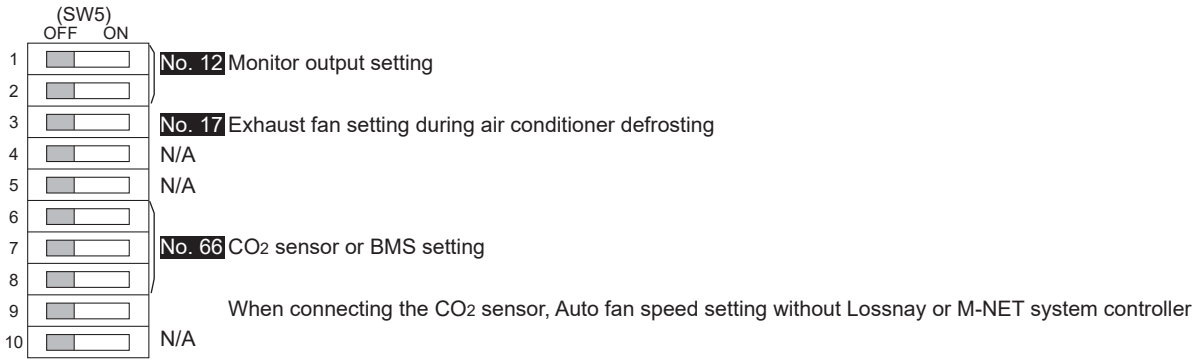

DIP-SW6 is to identify the model for circuit board. When replacing to new circuit board, set the same setting as old one.

(SW6)

	SW6-1	SW6-2	SW6-3	SW6-4	SW6-5	SW6-6
TLGHF0300RVX02A / LGH-F300RVX2-E (F300R)	OFF	OFF	ON	OFF	ON	OFF
TLGHF0380RVX02A / LGH-F380RVX2-E (F380R)	ON	OFF	ON	OFF	ON	OFF
TLGHF0470RVX02A / LGH-F470RVX2-E (F470R)	OFF	ON	ON	ON	ON	OFF
TLGHF0600RVX02A / LGH-F600RVX2-E (F600R)	ON	ON	ON	ON	ON	OFF
TLGHF0940RVX02A / LGH-F940RVX2-E (F940R)	OFF	OFF	OFF	ON	ON	OFF
TLGHF1200RVX02A / LGH-F1200RVX2-E (F1200R)	ON	OFF	OFF	ON	ON	OFF

* Do not change from factory setting. If changed, please set as factory setting.

Change the function settings from the remote controller TZ-62DR-EA.

Please refer to the Instruction book of TZ-62DR-EA for how to set the function settings.

5. Function settings (continued)

No	Function	Setting Data																Factory setting	DIP-SW No.
		0	1	2	3	4	5	6	7	8	9	10	11	12	13	14	15		
1	Filter maintenance and fan power up setting against filter choking	Indicator N/A Fan power up N/A	Indicator available Fan power up N/A	Indicator available Fan power up available	Indicator N/A Fan power up available	—	—	—	—	—	—	—	—	—	—	—	—	0	—
2	Lossnay core maintenance indicator setting	N/A	Available	—	—	—	—	—	—	—	—	—	—	—	—	—	—	0	—
5	Automatic recovery setting after power interruption	Dip-SW priority	Stop when the power is On	Start when the power is On	Return to the state before interrup-tion	—	—	—	—	—	—	—	—	—	—	—	—	0	2-8
6	Indoor negative pressure setting	Dip-SW priority	N/A	Supply 1 down	Supply 2 down	—	—	—	—	—	—	—	—	—	—	—	—	0	2-4
7	Indoor positive pressure setting	Dip-SW priority	N/A	Exhaust 1 down	Exhaust 2 down	—	—	—	—	—	—	—	—	—	—	—	—	0	2-5
8	Max. fan speed setting during the first 30 minutes	N/A	Available	—	—	—	—	—	—	—	—	—	—	—	—	—	—	0	—
9	Delay start setting for air conditioner starting	Dip-SW priority	N/A	15 min	30 min	—	—	—	—	—	—	—	—	—	—	—	—	0	2-3
12	Monitor output setting TM3 ⑨⑩	Dip-SW priority	Operation monitor	Malfunction monitor	By-pass monitor	Supply fan monitor	Exhaust fan monitor	Pre-heater output	SA fan monitor output with delay operation (for After heater)	—	—	—	—	—	—	—	—	0	5-1 5-2
13	Monitor output setting PZ-4GS-E COM-OUT1	Operation monitor	Malfunction monitor	By-pass monitor	Supply fan monitor	Exhaust fan monitor	Pre-heater output	SA fan monitor output with delay operation (for After heater)	—	—	—	—	—	—	—	—	—	1	—
14	Monitor output setting PZ-4GS-E COM-OUT2	Operation monitor	Malfunction monitor	By-pass monitor	Supply fan monitor	Exhaust fan monitor	Pre-heater output	SA fan monitor output with delay operation (for After heater)	—	—	—	—	—	—	—	—	—	2	—
15	Monitor output setting PZ-4GS-E COM-OUT3	Operation monitor	Malfunction monitor	By-pass monitor	Supply fan monitor	Exhaust fan monitor	Pre-heater output	SA fan monitor output with delay operation (for After heater)	—	—	—	—	—	—	—	—	—	3	—
16	Monitor output setting PZ-4GS-E COM-OUT4	Operation monitor	Malfunction monitor	By-pass monitor	Supply fan monitor	Exhaust fan monitor	Pre-heater output	SA fan monitor output with delay operation (for After heater)	—	—	—	—	—	—	—	—	—	4	—
17	Exhaust fan setting during air conditioner defrosting	No change	Stop	Dip-SW priority	—	—	—	—	—	—	—	—	—	—	—	—	—	2	5-3
18	Exhaust fan setting at OA temperature lower than 5˚F (-15 ˚C)	No change	Forced to fan speed 2 or less	—	—	—	—	—	—	—	—	—	—	—	—	—	—	0	—
19	Interlock mode setting	ON/OFF interlock	ON interlock	OFF interlock	External input giv-en priority	—	—	—	—	—	—	—	—	—	—	—	—	0	—
28	Pulse input setting	Dip-SW priority	Non-pulse input	Pulse input	—	—	—	—	—	—	—	—	—	—	—	—	—	0	2-2
30	Night-purge setting 1) Air volume	N/A	Fan speed 1	Fan speed 2	Fan speed 3	Fan speed 4	—	—	—	—	—	—	—	—	—	—	—	0	—
31	Night-purge setting 2) Outdoor and indoor temperature gap	0 K (0˚F)	1 K (1.8˚F)	2 K (3.6˚F)	3 K (5.4˚F)	4 K (7.2˚F)	5 K (9˚F)	6 K (10.8˚F)	7 K (12.6˚F)	—	—	—	—	—	—	—	—	5	—
32	Night-purge setting 3) The lowest outdoor temperature	Setting Data 0 to 15 --> The lowest outdoor temperature for Night-purge 59˚F (15˚C) to 86˚F (30˚C)																2	—
33	Night-purge setting 4) Outdoor temperature detection period	24 hrs	48 hrs	72 hrs	—	—	—	—	—	—	—	—	—	—	—	—	—	2	—
34	Input priority setting	Bunch control priority	Individual control priority	—	—	—	—	—	—	—	—	—	—	—	—	—	—	0	—
36	Outdoor temperature display setting	N/A	Available	—	—	—	—	—	—	—	—	—	—	—	—	—	—	1	—
37	Indoor temperature display setting	N/A	Available	—	—	—	—	—	—	—	—	—	—	—	—	—	—	1	—
38	CO_2 concentration display setting	N/A	Available	—	—	—	—	—	—	—	—	—	—	—	—	—	—	1	—
39	Calculated supply air temperature display setting	N/A	Available	—	—	—	—	—	—	—	—	—	—	—	—	—	—	0	—
40	Temperature exchange efficiency setting (10 digit)	Setting Data 0 to 9 --> 10 digit of temperature exchange efficiency 0 to 9										—	—	—	—	—	—	7	—
41	Temperature exchange efficiency setting (1 digit)	Setting Data 0 to 9 --> 1 digit of temperature exchange efficiency 0 to 9										—	—	—	—	—	—	0	—
42	Outdoor temperature correction	Setting Data 0 to 14 --> Outdoor temperature correction -7 K (-12.6˚F) to 7 K (12.6˚F)															—	7	—
43	Indoor temperature correction	Setting Data 0 to 14 --> Room temperature correction -7 K (-12.6˚F) to 7 K (12.6˚F)															—	7	—
44	CO_2 concentration correction	Setting Data 0 to 10 --> CO_2 concentration correction -500ppm ～ 500ppm (100ppm in increments)											—	—	—	—	—	5	—
45	Supply fan monitor threshold	Fan speed 1 or higher	Fan speed 2 or higher	Fan speed 3 or higher	Fan speed 4	—	—	—	—	—	—	—	—	—	—	—	—	0	—
46	Exhaust fan monitor threshold	Fan speed 1 or higher	Fan speed 2 or higher	Fan speed 3 or higher	Fan speed 4	—	—	—	—	—	—	—	—	—	—	—	—	0	—

5. Function settings (continued)

No	Function	Setting Data																Factory setting	DIP-SW No.
		0	1	2	3	4	5	6	7	8	9	10	11	12	13	14	15		
52	Automatic ventilation mode setting 1) Outdoor and indoor temperature gap	Setting Data 0 to 7 --> Temperature gap 0 K (0˚F) to 7 K (12.6˚F)								—	—	—	—	—	—	—	—	0	—
53	Automatic ventilation mode setting 2) The lowest outdoor temperature setting	Setting Data 0 to 15 --> Lowest outdoor temperature 50˚F (10˚C) to 77˚F (25˚C)																6	—
54	Automatic ventilation mode setting 3) The lowest indoor temperature setting	Setting Data 0 to 15 --> Lowest indoor temperature 59˚F (15˚C) to 86˚F (30˚C)																1	—
55	Supply fan power up for Fan speed 4	N/A	1 level up	2 level up	3 level up	4 level up	—	—	—	—	—	—	—	—	—	—	—	0	—
56	Exhaust fan power up for Fan speed 4	N/A	1 level up	2 level up	3 level up	4 level up	—	—	—	—	—	—	—	—	—	—	—	0	—
60	Pre-heater output setting 1) ON temperature	32 ˚F (0 ˚C)	30 ˚F (-1 ˚C)	28 ˚F (-2 ˚C)	27 ˚F (-3 ˚C)	25 ˚F (-4 ˚C)	23 ˚F (-5 ˚C)	21 ˚F (-6 ˚C)	19 ˚F (-7 ˚C)	—	—	—	—	—	—	—	—	0	—
61	Pre-heater output setting 2) OFF interval	1 hr	2 hrs	3 hrs	4 hrs	5 hrs	—	—	—	—	—	—	—	—	—	—	—	0	—
62	LED usage setting for PZ-70CSW-E during non operation	Unlit	Lit	—	—	—	—	—	—	—	—	—	—	—	—	—	—	0	—
64	Fan speed for air volume “High” input	Dip-SW priority	Fan speed 4	Fan speed 3	—	—	—	—	—	—	—	—	—	—	—	—	—	0	2-6
65	Fan speed for air volume “Low” input	Dip-SW priority	Fan speed 2	Fan speed 1	—	—	—	—	—	—	—	—	—	—	—	—	—	0	2-7
66	CO_2 sensor or BMS setting	Dip-SW priority	N/A	3rd party's CO_2 seonsor	—	BMS Pattern Z	CO_2 sensor PZ-70CSW-E	—	CO_2 sensor PZ-70CSB-E	—	—	—	—	—	—	—	—	0	5-6 5-7 5-8
67	Threshold minutes for PZ-70CSW-E LED	10 min	15 min	20 min	25 min	30 min	—	—	—	—	—	—	—	—	—	—	—	2	—
68	Threshold concentration for PZ-70CSW-E LED	1000 ppm	1100 ppm	1200 ppm	1300 ppm	1400 ppm	1500 ppm	1600 ppm	1700 ppm	1800 ppm	1900 ppm	2000 ppm	—	—	—	—	—	5	—
69	Emergency stop setting	Emergency stop	Normal stop	—	—	—	—	—	—	—	—	—	—	—	—	—	—	0	—
73	Airflow setting for supply fan speed 3	100 %	95 %	90 %	85 %	80 %	75 %	70 %	65 %	60 %	55 %	50 %	45 %	40 %	35 %	30 %	25 %	5	—
74	Airflow setting for supply fan speed 2	100 %	95 %	90 %	85 %	80 %	75 %	70 %	65 %	60 %	55 %	50 %	45 %	40 %	35 %	30 %	25 %	10	—
75	Airflow setting for supply fan speed 1	100 %	95 %	90 %	85 %	80 %	75 %	70 %	65 %	60 %	55 %	50 %	45 %	40 %	35 %	30 %	25 %	15	—
76	Airflow setting for exhaust fan speed 3	100 %	95 %	90 %	85 %	80 %	75 %	70 %	65 %	60 %	55 %	50 %	45 %	40 %	35 %	30 %	25 %	5	—
77	Airflow setting for exhaust fan speed 2	100 %	95 %	90 %	85 %	80 %	75 %	70 %	65 %	60 %	55 %	50 %	45 %	40 %	35 %	30 %	25 %	10	—
78	Airflow setting for exhaust fan speed 1	100 %	95 %	90 %	85 %	80 %	75 %	70 %	65 %	60 %	55 %	50 %	45 %	40 %	35 %	30 %	25 %	15	—
83	Filter maintenance interval setting - Thousands digit	0	1	2	3	4	5	6	7	8	9	—	—	—	—	—	—	3	—
84	Filter maintenance interval setting - Hundreds digit	0	1	2	3	4	5	6	7	8	9	—	—	—	—	—	—	0	—
85	Lossnay core maintenance interval setting - Thousands digit	0	1	2	3	4	5	6	7	8	9	—	—	—	—	—	—	6	—
86	Lossnay core maintenance interval setting - Hundreds digit	0	1	2	3	4	5	6	7	8	9	—	—	—	—	—	—	0	—
87	Airflow setting for supply fan speed 4	100 %	95 %	90 %	85 %	80 %	75 %	70 %	65 %	60 %	55 %	50 %	45 %	40 %	35 %	30 %	25 %	0	—
88	Airflow setting for exhaust fan speed 4	100 %	95 %	90 %	85 %	80 %	75 %	70 %	65 %	60 %	55 %	50 %	45 %	40 %	35 %	30 %	25 %	0	—
89	CO_2 sensor setting - maximum side - Hundreds digits	600 ppm	700 ppm	800 ppm	900 ppm	1000 ppm	1100 ppm	1200 ppm	1300 ppm	1400 ppm	1500 ppm	1600 ppm	1700 ppm	1800 ppm	1900 ppm	2000 ppm	—	4	—
90	CO_2 sensor setting - maximum side - tens digits	0 ppm	50 ppm	—	—	—	—	—	—	—	—	—	—	—	—	—	—	0	—
91	CO_2 sensor setting - minimum side - Hundreds digits	300 ppm	400 ppm	500 ppm	600 ppm	700 ppm	800 ppm	900 ppm	1000 ppm	1100 ppm	1200 ppm	1300 ppm	1400 ppm	1500 ppm	1600 ppm	1700 ppm	—	1	—
92	CO_2 sensor setting - minimum side - tens digits	0 ppm	50 ppm	—	—	—	—	—	—	—	—	—	—	—	—	—	—	1	—
93	CO_2 sensor correction	-250 ppm	-200 ppm	-150 ppm	-100 ppm	-50 ppm	0 ppm	50 ppm	100 ppm	150 ppm	200 ppm	250 ppm	—	—	—	—	—	5	—
100	Initialization (No.1 ～ 99)	N/A	Initialize	—	—	—	—	—	—	—	—	—	—	—	—	—	—	0	—

This table shows the summary of function settings. Please refer to the following pages for more details.

The functions indicated with “N/A” in the “DIP-SW No.” column are available only when using with remote controller TZ-62DR-EA.

TZ-62DR-EA can set Night purge setting (No.30), By-pass setting (No.52, 53, 54), CO_2 sensor setting (No.89, 90, 91, 92), Filter maintenance interval setting (No.83, 84), Lossnay core maintenance interval setting (No. 85, 86) and Airflow setting (No. 73-78, 87, 88) by different way more easily.

Refer to the remote controller TZ-62DR-EA operation manual for more detail.

5. Function settings (continued)

— Auto fan speed setting without Lossnay or M-NET system controller

When CO_2 sensor is connected but any remote controller is not connected, SW 5-9 has to be ON in order to operate according to CO_2 concentration.
When SW 5-9 is ON, any Lossnay remote controller or M-NET system controller can not be connected and not possible to interlock with City Multi or Mr. Slim unit.

DIP-SW		Setting check	Auto fan speed setting without Lossnay or M-NET system controller
SW No.	Setting		
SW5-9	OFF (Factory setting)		N/A
	ON		Fan speed changes according to CO_2 concentration

No. 1 Filter maintenance and fan power up setting against filter choking

Set the schedule for filter cleaning based on the estimated concentration of dust in the air.
When fan power up is available, exhaust and supply fans power up at 1,000 hrs, 2,000 hrs and 3,000 hrs gradually.
If function No. 55 or No. 56 is already worked, fan power up function may not be available.
Estimated hour differs by actual operated fan speed.
This function is N/A from Lossnay unit DIP-SW.
The target interval can be selected at No. 83, No. 84.

DIP-SW		Setting check	TZ-62DR-EA		Setting check	Filter maintenance indicator	Fan power UP
SW No.	Setting		Function No.	Setting Data			
N/A	-	-	1	0 (Factory setting)		N/A	N/A
	-	-		1		Appears at the interval of estimated 3,000 hrs	N/A
	-	-		2		Appears at the interval of estimated 3,000 hrs	Available
	-	-		3		N/A	Available

⚠ CAUTION

- **When the cumulative operation time of the Lossnay exceeded the estimated hours, the maintenance icon will appear on the air conditioner remote controller or the Lossnay remote controller. After cleaning the filter, the maintenance icon can be reset. Refer to the Instruction book for the remote controller.**

No.2 Lossnay core maintenance indicator setting

When using TZ-62DR-EA, set to enable Lossnay core maintenance display. Estimated hour differs by actual operated fan speed.
This function is N/A from Lossnay unit DIP-SW.
The target interval can be selected at No. 85, No. 86.

DIP-SW		Setting check	TZ-62DR-EA		Setting check	Lossnay core maintenance indicator
SW No.	Setting		Function No.	Setting Data		
N/A	-	-	2	0 (Factory setting)		N/A
	-	-		1		Indicate at estimated 6,000 hrs

⚠ CAUTION

- **When the cumulative operation time of the Lossnay exceeded the estimated hours, the maintenance icon will appear on the Lossnay remote controller. After cleaning the Lossnay core, the maintenance icon can be reset. Refer to the Instruction book for the remote controller.**

No.5 Automatic recovery setting after power interruption

Sets for automatic recovery following power interruption.

DIP-SW		Setting check	TZ-62DR-EA		Setting check	Lossnay operation when the power is recovered
SW No.	Setting		Function No.	Setting Data		
SW2-8	-	-	5	0 (Factory setting)		DIP-SW priority
	OFF (Factory setting)			1		Lossnay remains stopped.
	-	-		2		Lossnay starts operation.
	ON			3		Lossnay returns to the state before interruption*

* If a power failure happens when Lossnay is operating by external signal via TM2 ①② or YZ, Lossnay returns the condition before power failure regardless of the external input condition after power recovery.

No. 6 Indoor negative pressure setting

Exhaust fan speed becomes bigger than supply fan speed.
Remote controller indicates fan speed of exhaust fan.

Fan speed Display	Exhaust fan	Supply fan	
		1 down	2 down
4	4	3	2
3	3	2	1
2	2	1	1
1	1	1	1

DIP-SW		Setting check	TZ-62DR-EA		Setting check	Down level of supply fan speed
SW No.	Setting		Function No.	Setting Data		
SW2-4	-	-	6	0 (Factory setting)		DIP-SW priority
	OFF (Factory setting)			1		N/A
	ON			2		Supply fan speed is 1 down to exhaust fan speed
	-	-		3		Supply fan speed is 2 down to exhaust fan speed

No.7 Indoor positive pressure setting

Supply fan speed becomes bigger than exhaust fan speed.
Remote controller indicates fan speed of supply fan.

Fan speed Display	Supply fan	Exhaust fan	
		1 down	2 down
4	4	3	2
3	3	2	1
2	2	1	1
1	1	1	1

DIP-SW		Setting check	TZ-62DR-EA		Setting check	Down level of exhaust fan speed
SW No.	Setting		Function No.	Setting Data		
SW2-5	-	-	7	0 (Factory setting)		DIP-SW priority
	OFF (Factory setting)			1		N/A
	ON			2		Exhaust fan speed is 1 down to supply fan speed
	-	-		3		Exhaust fan speed is 2 down to supply fan speed

No.8 Max. fan speed setting during the first 30 minutes

This sets the fan to run forcibly for 30 minutes when operation starts to ventilate the indoor area. After 30 minutes, fan speed can be changed. Use this setting if the indoor air is contaminated at night when the system is shut down and you desire to ventilate the indoor area quickly when operation is started in the morning.
This function is N/A from Lossnay unit DIP-SW.
While this function is working, and selected fan speed are displayed on the screen of TZ-62DR-EA.

DIP-SW		Setting check	TZ-62DR-EA		Setting check	Max. fan speed setting during the first 30 minutes
SW No.	Setting		Function No.	Setting Data		
N/A	-	-	8	0 (Factory setting)		N/A
	-	-		1		Available

5. Function settings (continued)

No.9 Delay start setting for air conditioner starting

Delays Lossnay operation for 30 minutes when City Multi or Mr. Slim starts operating or when a external device starts operating.
This function is available only when Lossnay is interlocked with air conditioners.

DIP-SW		Setting check	TZ-62DR-EA		Setting check	Lossnay delay start
SW No.	Setting		Function No.	Setting Data		
SW2-3	-	-	9	0 (Factory setting)		DIP-SW priority
	OFF (Factory setting)			1		N/A
	-	-		2		15 min
	ON			3		30 min

No.12-16 Monitor output setting

Set operation monitor output from TM3 ⑨⑩ synchronized with fan operation, ventilation mode or occurrence of malfunction.
Monitor output setting for PZ-4GS-E COM-OUT1 to 4 can be set from the remote controller as well.
See page 15 for which function No. is applied for the each terminal.

DIP-SW			Setting check	TZ-62DR-EA		Setting check	Monitor output setting
SW No.	Setting			Setting			
	Function No.12	Function No.13-16		Function No.12	Function No.13-16		
SW5-1 SW5-2	-	-	-	0	-		DIP-SW priority
	5-1 OFF 5-2 OFF (Factory setting)	-		1	0		Operation monitor output The output turns ON while Lossnay is operating.
	5-1 ON 5-2 OFF	-		2	1		Malfunction monitor output The output turns ON when a malfunction occurs on the Lossnay unit.
	5-1 OFF 5-2 ON	-		3	2		By-pass ventilation operation monitor output Corresponds to operation mode output of the By-pass damper.
	5-1 ON 5-2 ON	-		4	3		SA fan monitor output * When supply fan stops due to cold outdoor temp. or defrosting, output stops.
				5	4		EA fan monitor output
				6	5		Pre-heater output Output starts 10 seconds after supply fan starts operation. Fan continues to operate for 3 min. after stopping the output. Lossnay starts output when outdoor temp. is 32˚F (0˚C) or less, and stops output when detecting temp. becomes 59˚F (15˚C) Lossnay stops the output every 1 hour. Error code is shown on the remote controller and the output stops in the case of following. 1) Outdoor temperature higher than 59˚F (15˚C) within 15 minutes after the output starts. 2) Outdoor temperature -4˚F (-20˚C) or lower, 5 minutes after the output starts.
				7	6		SA fan monitor output with delay operation (for After heater) Output starts 10 seconds after supply fan starts operation. Fan continues to operate for 3 min. after stopping the output.

- To use as the after-heater output, observe the cautions listed in 4 in the page 10.
- For heater selection, observe the cautions listed in 4 in the page 10.

No.17 Exhaust fan setting during air conditioner defrosting

This function can be used under the condition Lossnay supply duct is connected to Mr. Slim or City Multi indoor unit.
Sets the operation of the exhaust fan during defrosting of the air conditioner (when supply fan stop).
To enable this function, it is necessary to set the indoor unit also. Please refer to its manual.

DIP-SW		Setting check	TZ-62DR-EA		Setting check	Exhaust fan operation during air conditioner defrosting
SW No.	Setting		Function No.	Setting Data		
SW5-3	OFF (Factory setting)		17	0		No change
	ON			1		Stop
	-	-		2 (Factory setting)		DIP-SW priority

No.18 Exhaust fan setting at OA temperature lower than 5˚F (-15 ˚C)

Sets the operation of the exhaust fan when the outdoor air is lower than 5˚F (-15 ˚C) (when supply fan stop).
This function is N/A from Lossnay unit DIP-SW.

DIP-SW		Setting check	TZ-62DR-EA		Setting check	Exhaust fan operation at outdoor temp. 5˚F (-15 ˚C) or less
SW No.	Setting		Function No.	Setting Data		
N/A	-	-	18	0 (Factory setting)		No change
	-	-		1		Forced to fan speed 2 or less

- If EA and SA is set unbalanced, the Lossnay core defrosting may not work correctly. For continuous unbalanced operation, a pre-heater is recommended to install.

No.19 Interlock mode setting

These settings indicate how Lossnay should operate when City Multi or external devices are started or stopped.
This function is N/A from Lossnay unit DIP-SW.

DIP-SW		Setting check	TZ-62DR-EA		Setting check	Interlock setting
SW No.	Setting		Function No.	Setting Data		
N/A	-	-	19	0 (Factory setting)		The Lossnay will start and stop according to the operation of the external devices. Subsequent operation will be possible using the remote controller for the Lossnay or MELANS.
	-	-		1		The Lossnay will start whenever external devices are operated. Stopping Lossnay operation will be possible using its remote controller or MELANS.
	-	-		2		The Lossnay will stop whenever external devices are stopped. Starting Lossnay operation will be possible using its remote controller or MELANS.
	-	-		3		The Lossnay will start and stop according to the operation of the external devices. Control via the Lossnay remote controller or MELANS will only be possible when external devices are stopped.

5. Function settings (continued)

No.28 Pulse input setting

Set external input signal type from external device for TM2.

DIP-SW		Setting check	TZ-62DR-EA		Setting check	Pulse input setting
SW No.	Setting		Function No.	Setting Data		
SW2-2	-	-	28	0 (Factory setting)		DIP-SW priority
	OFF (Factory setting)			1		NOT pulse input
	ON			2		Pulse input

When pulse signal is selected, No. 9 and No. 19 are not available.
Keep factory settings for No. 9 and No. 19.
Either interlocking with City multi or Mr. Slim is not possible.

No.30 Night-purge setting 1) Air volume

Set fan speed during Night-purge. To use Night-purge function, it is necessary to set No. 30, No. 31, No. 32 correctly.
This function is N/A from Lossnay unit DIP-SW.
It can also be set on the TZ-62DR-EA's Ventilation settings screen.
When using TZ-62DR-EA and AE-200A together, set all conditions from AE-200A.

DIP-SW		Setting check	TZ-62DR-EA		Setting check	Air volume
SW No.	Setting		Function No.	Setting Data		
N/A	-	-	30	0 (Factory setting)		N/A (Night-purge function is not available)
	-	-		1		Fan speed 1
	-	-		2		Fan speed 2
	-	-		3		Fan speed 3
	-	-		4		Fan speed 4

No.31 Night-purge setting 2) Outdoor and indoor temperature gap

Set one of conditions for Night-purge start, temperature gap between indoor and outdoor.
When the actual gap between indoor and outdoor becomes bigger than the setting, Night-purge starts.
This function is N/A from Lossnay unit DIP-SW.
When using TZ-62DR-EA and AE-200A together, set all conditions from AE-200A.

DIP-SW		Setting check	TZ-62DR-EA		Setting check	Outdoor and indoor temperature gap
SW No.	Setting		Function No.	Setting Data		
N/A	-	-	31	0		0 K (0 °F/0 °C) or more
	-	-		1		1 K (1.8 °F/1˚C) or more
	-	-		2		2 K (3.6 °F/2˚C) or more
	-	-		3		3 K (5.4 °F/3˚C) or more
	-	-		4		4 K (7.2 °F/4˚C) or more
	-	-		5 (Factory setting)		5 K (9 °F/5˚C) or more
	-	-		6		6 K (10.8 °F/6˚C) or more
	-	-		7		7 K (12.6 °F/7˚C) or more

No.32 Night-purge setting 3) The lowest outdoor temperature

Set one of conditions for Night-purge start, maximum outdoor temperature within 72 hours.
When this setting temperature is low, it is likely to start Night-purge.
This function is N/A from Lossnay unit DIP-SW.
When using TZ-62DR-EA and AE-200A together, set all conditions from AE-200A.

DIP-SW		Setting check	TZ-62DR-EA		Setting check	The lowest outdoor temperature
SW No.	Setting		Function No.	Setting Data		
N/A	-	-	32	0		59 ˚F (15 ˚C) or more
	-	-		1		61 ˚F (16 ˚C) or more
	-	-		2 (Factory setting)		63 ˚F (17 ˚C) or more
	-	-		3		64 ˚F (18 ˚C) or more
	-	-		4		66 ˚F (19 ˚C) or more
	-	-		5		68 ˚F (20 ˚C) or more
	-	-		6		70 ˚F (21 ˚C) or more
	-	-		7		72 ˚F (22 ˚C) or more
	-	-		8		73 ˚F (23 ˚C) or more
	-	-		9		75 ˚F (24 ˚C) or more
	-	-		10		77 ˚F (25 ˚C) or more
	-	-		11		79 ˚F (26 ˚C) or more
	-	-		12		81 ˚F (27 ˚C) or more
	-	-		13		82 ˚F (28 ˚C) or more
	-	-		14		84 ˚F (29 ˚C) or more
	-	-		15		86 ˚F (30 ˚C) or more

No.33 Night purge setting 4) Outdoor temperature detection period

Night-purge is decided to start or not by the OA temperature within X hour.
X hour can be selected from 24, 48 or 72 hrs.
It is possible to operate Night-purge on Sunday midnight or Monday early morning by select longer setting even Lossnay stops.
This function is N/A from Lossnay unit DIP-SW.

DIP-SW		Setting check	TZ-62DR-EA		Setting check	OA temperature detection period
SW No.	Setting		Function No.	Setting Data		
N/A	-	-	33	0		24 hrs
	-	-		1		48 hrs
	-	-		2 (Factory setting)		72 hrs

No.34 Input priority setting

Set to follow input to the main unit from air conditioner, fan speed controller, etc.
When multiple Lossnay units fan speed is externally controlled via CN17 or CN26, select individual control or bunch control.
When bunch control is selected, connect TZ-62DR-EA and input external signal to the main unit.
This function is N/A from Lossnay unit DIP-SW.

DIP-SW		Setting check	TZ-62DR-EA		Setting check	Input priority setting
SW No.	Setting		Function No.	Setting Data		
N/A	-	-	34	0 (Factory setting)		Bunch control priority
	-	-		1		Individual control priority

5. Function settings (continued)

No.36 Outdoor temperature display setting

Set to display outdoor temperature detected by Lossnay unit thermistor.
This function is N/A from Lossnay unit DIP-SW.
This function is available only when “Sensor value” is set to “Yes” (Display) by the remote controller TZ-62DR-EA.

DIP-SW		Setting check	TZ-62DR-EA		Setting check	Outdoor temperature display
SW No.	Setting		Function No.	Setting Data		
N/A	-	-	36	0		N/A
	-	-		1 (Factory setting)		Available on the screen of TZ-62DR-EA

No.37 Indoor temperature display setting

Set to display indoor temperature detected by Lossnay unit thermistor.
This function is N/A from Lossnay unit DIP-SW.
This function is available only when “Sensor value” is set to “Yes” (Display) by the remote controller TZ-62DR-EA.

DIP-SW		Setting check	TZ-62DR-EA		Setting check	Indoor temperature display
SW No.	Setting		Function No.	Setting Data		
N/A	-	-	37	0		N/A
	-	-		1 (Factory setting)		Available on the screen of TZ-62DR-EA

No.38 CO_2 concentration display setting

Set to display CO_2 concentration when the CO_2 sensor (PZ-70CSB-E, PZ-70CSW-E) is used.
This function is N/A from Lossnay unit DIP-SW.

DIP-SW		Setting check	TZ-62DR-EA		Setting check	CO_2 concentration display
SW No.	Setting		Function No.	Setting Data		
N/A	-	-	38	0		N/A
	-	-		1 (Factory setting)		Available on the screen of TZ-62DR-EA

- This function is available only when “Sensor value” is set to “Yes” (Display) by the remote controller TZ-62DR-EA.
- When displaying CO_2 concentration, supply air temperature cannot be displayed simultaneously.
- CO_2 concentration display shows the value detected by a CO_2 sensor connected to Lossnay unit. The value may differ from the actual indoor CO_2 concentration. This function cannot be used as a measuring instrument.
- The value may significantly differ from the actual indoor CO_2 concentration for approx. 15 minutes after starting operation.
- When 3rd party’s CO_2 sensor is connected, CO_2 concentration is not displayed on TZ-62DR-EA screen.

No.39 Calculated supply air temperature display setting

Set to display calculated supply air temperature or not.
This function is N/A from Lossnay unit DIP-SW.
In addition, this function is available only when “Sensor value” is set to “Yes”(Display) by the remote controller TZ-62DR-EA.
CO_2 concentration and supply air temperature can not be displayed at the same time.

DIP-SW		Setting check	TZ-62DR-EA		Setting check	Calculated supply air temperature display
SW No.	Setting		Function No.	Setting Data		
N/A	-	-	39	0 (Factory setting)		N/A
	-	-		1		Available on the screen of TZ-62DR-EA

- CO_2 concentration and supply air temperature can not be displayed at the same time.

No.40, 41 Temperature exchange efficiency setting

Set the 10 digit of temperature exchange efficiency which is used to calculate supply air temperature.
This function is N/A from Lossnay unit DIP-SW.

DIP-SW		Setting check	TZ-62DR-EA		Setting check	10 digit of temperature exchange efficiency
SW No.	Setting		Function No.	Setting Data		
N/A	-	-	40	0		0
	-	-		1		1
	-	-		2		2
	-	-		3		3
	-	-		4		4
	-	-		5		5
	-	-		6		6
	-	-		7 (Factory setting)		7
	-	-		8		8
	-	-		9		9

DIP-SW		Setting check	TZ-62DR-EA		Setting check	1 digit of temperature exchange efficiency
SW No.	Setting		Function No.	Setting Data		
N/A	-	-	41	0 (Factory setting)		0
	-	-		1		1
	-	-		2		2
	-	-		3		3
	-	-		4		4
	-	-		5		5
	-	-		6		6
	-	-		7		7
	-	-		8		8
	-	-		9		9

No.42 Outdoor temperature correction

Set the correction for the outdoor temperature displayed on the TZ-62DR-EA screen by function No. 36 .
This function is N/A from Lossnay unit DIP-SW.

DIP-SW		Setting check	TZ-62DR-EA		Setting check	The correction to thermistor detection
SW No.	Setting		Function No.	Setting Data		
N/A	-	-	42	0		-7 K (-12.6 °F/-7 °C)
	-	-		1		-6 K (-10.8 °F/-6 °C)
	-	-		2		-5 K (-9 °F/-5 °C)
	-	-		3		-4 K (-7.2 °F/-4 °C)
	-	-		4		-3 K (-5.4 °F/-3 °C)
	-	-		5		-2 K (-3.6 °F/-2 °C)
	-	-		6		-1 K (-1.8 °F/-1 °C)
	-	-		7 (Factory setting)		0 K (0 °F/0 °C)
	-	-		8		+1 K (+1.8 °F/+1 °C)
	-	-		9		+2 K (+3.6 °F/+2 °C)
	-	-		10		+3 K (+5.4 °F/+3 °C)
	-	-		11		+4 K (+7.2 °F/+4 °C)
	-	-		12		+5 K (+9 °F/+5 °C)
	-	-		13		+6 K (+10.8 °F/+6 °C)
	-	-		14		+7 K (+12.6 °F/+7 °C)

5. Function settings (continued)

No.43 Indoor temperature correction

Set the correction for the indoor temperature displayed on the TZ-62DR-EA screen by function No. 37.
This function is N/A from Lossnay unit DIP-SW.

DIP-SW		Setting check	TZ-62DR-EA		Setting check	The correction to thermistor detection
SW No.	Setting		Function No.	Setting Data		
N/A	-	-	43	0		-7 K (-12.6 °F/-7 °C)
	-	-		1		-6 K (-10.8 °F/-6 °C)
	-	-		2		-5 K (-9 °F/-5 °C)
	-	-		3		-4 K (-7.2 °F/-4 °C)
	-	-		4		-3 K (-5.4 °F/-3 °C)
	-	-		5		-2 K (-3.6 °F/-2 °C)
	-	-		6		-1 K (-1.8 °F/-1 °C)
	-	-		7 (Factory setting)		0 K (0 °F/0 °C)
	-	-		8		+1 K (+1.8 °F/+1 °C)
	-	-		9		+2 K (+3.6 °F/+2 °C)
	-	-		10		+3 K (+5.4 °F/+3 °C)
	-	-		11		+4 K (+7.2 °F/+4 °C)
	-	-		12		+5 K (+9 °F/+5 °C)
	-	-		13		+6 K (+10.8 °F/+6 °C)
	-	-		14		+7 K (+12.6 °F/+7 °C)

No.44 CO_2 concentration correction

CO_2 concentration displayed on the TZ-62DR-EA can be corrected.
This function is available when there is CO_2 concentration gap due to the location of CO_2 sensor.
This function is N/A from Lossnay unit DIP-SW.

DIP-SW		Setting check	TZ-62DR-EA		Setting check	CO_2 concentration correction
SW No.	Setting		Function No.	Setting Data		
N/A	-	-	44	0		-500 ppm
	-	-		1		-400 ppm
	-	-		2		-300 ppm
	-	-		3		-200 ppm
	-	-		4		-100 ppm
	-	-		5 (Factory setting)		±0 ppm
	-	-		6		100 ppm
	-	-		7		200 ppm
	-	-		8		300 ppm
	-	-		9		400 ppm
	-	-		10		500 ppm

No.45 Supply fan monitor threshold

The threshold fan speed of supply fan monitor output can be selected.
This function is N/A from Lossnay unit DIP-SW.

DIP-SW		Setting check	TZ-62DR-EA		Setting check	Supply fan monitor threshold
SW No.	Setting		Function No.	Setting Data		
N/A	-	-	45	0 (Factory setting)		Fan speed 1 or higher
	-	-		1		Fan speed 2 or higher
	-	-		2		Fan speed 3 or higher
	-	-		3		Fan speed 4

No.46 Exhaust fan monitor threshold

The threshold fan speed of exhaust fan monitor output can be selected.
This function is N/A from Lossnay unit DIP-SW.

DIP-SW		Setting check	TZ-62DR-EA		Setting check	Exhaust fan monitor threshold
SW No.	Setting		Function No.	Setting Data		
N/A	-	-	46	0 (Factory setting)		Fan speed 1 or higher
	-	-		1		Fan speed 2 or higher
	-	-		2		Fan speed 3 or higher
	-	-		3		Fan speed 4

No.52 Automatic ventilation mode setting 1) Outdoor and indoor temperature gap

Set one of conditions for By-pass mode in auto ventilation operation, temperature gap between indoor and outdoor.
This function is N/A from Lossnay unit DIP-SW.
This function can also be set on the **Auto By-pass** settings screen of the TZ-62DR-EA.

DIP-SW		Setting check	TZ-62DR-EA		Setting check	Gap between Indoor temp. and Outdoor temp.
SW No.	Setting		Function No.	Setting Data		
N/A	-	-	52	0 (Factory setting)		0 K (0 °F/0 °C) or more
	-	-		1		1 K (1.8 °F/1 °C) or more
	-	-		2		2 K (3.6 °F/2 °C) or more
	-	-		3		3 K (5.4 °F/3 °C) or more
	-	-		4		4 K (7.2 °F/4 °C) or more
	-	-		5		5 K (9 °F/5 °C) or more
	-	-		6		6 K (10.8 °F/6 °C) or more
	-	-		7		7 K (12.6 °F/7 °C) or more

No.53 Automatic ventilation mode setting 2) The lowest outdoor temperature

Set one of conditions for By-pass mode in auto ventilation operation, minimum outdoor temperature which comes in indoor directly.
This function is N/A from Lossnay unit DIP-SW.
This function can also be set on the **Auto By-pass** settings screen of the TZ-62DR-EA.

DIP-SW		Setting check	TZ-62DR-EA		Setting check	Outdoor temperature
SW No.	Setting		Function No.	Setting Data		
N/A	-	-	53	0		50 ˚F (10 ˚C) or more
	-	-		1		52 ˚F (11 ˚C) or more
	-	-		2		54 ˚F (12 ˚C) or more
	-	-		3		55 ˚F (13 ˚C) or more
	-	-		4		57 ˚F (14 ˚C) or more
	-	-		5		59 ˚F (15 ˚C) or more
	-	-		6 (Factory setting)		61 ˚F (16 ˚C) or more
	-	-		7		63 ˚F (17 ˚C) or more
	-	-		8		64 ˚F (18 ˚C) or more
	-	-		9		66 ˚F (19 ˚C) or more
	-	-		10		68 ˚F (20 ˚C) or more
	-	-		11		70 ˚F (21 ˚C) or more
	-	-		12		72 ˚F (22 ˚C) or more
	-	-		13		73 ˚F (23 ˚C) or more
	-	-		14		75 ˚F (24 ˚C) or more
	-	-		15		77 ˚F (25 ˚C) or more

5. Function settings (continued)

No.54 Automatic ventilation mode setting 3) The lowest indoor temperature setting

Set one of conditions for By-pass mode in auto ventilation operation, minimum indoor temperature.
This function is N/A from Lossnay unit DIP-SW.
When Lossnay is interlocked to Mr. Slim or City Multi indoor unit, the target temperature of the indoor unit is the lowest indoor temperature for By-pass mode.
This function can also be set on the **Auto By-pass** settings screen of the TZ-62DR-EA.

DIP-SW		Setting check	TZ-62DR-EA		Setting check	Indoor temperature
SW No.	Setting		Function No.	Setting Data		
N/A	-	-	54	0		59 ˚F (15 ˚C) or more
	-	-		1 (Factory setting)		61 ˚F (16 ˚C) or more
	-	-		2		63 ˚F (17 ˚C) or more
	-	-		3		64 ˚F (18 ˚C) or more
	-	-		4		66 ˚F (19 ˚C) or more
	-	-		5		68 ˚F (20 ˚C) or more
	-	-		6		70 ˚F (21 ˚C) or more
	-	-		7		72 ˚F (22 ˚C) or more
	-	-		8		73 ˚F (23 ˚C) or more
	-	-		9		75 ˚F (24 ˚C) or more
	-	-		10		77 ˚F (25 ˚C) or more
	-	-		11		79 ˚F (26 ˚C) or more
	-	-		12		81 ˚F (27 ˚C) or more
	-	-		13		82 ˚F (28 ˚C) or more
	-	-		14		84 ˚F (29 ˚C) or more
	-	-		15		86 ˚F (30 ˚C) or more

User can set conditions to go into By-pass mode in automatic ventilation mode by function No. 52, No. 53, and No. 54 .
Setting examples are shown below.
Function No. 52, No. 53, and No. 54 can also be set on the Auto bypass setting screen of TZ-62DR-EA.

Example 1
By-pass/Heat recovery ventilation map in automatic ventilation mode

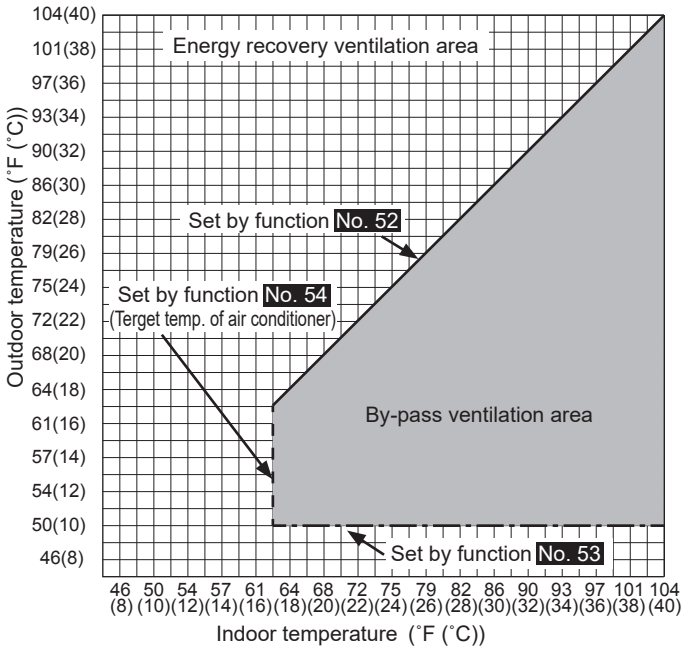

Function No.	Setting Data
52	0 (0 K (0 °F/0 °C))
53	0 (50 ˚F (10 ˚C))
54	2 (63 ˚F (17 ˚C))

Example 2
By-pass/Heat recovery ventilation map in automatic ventilation mode

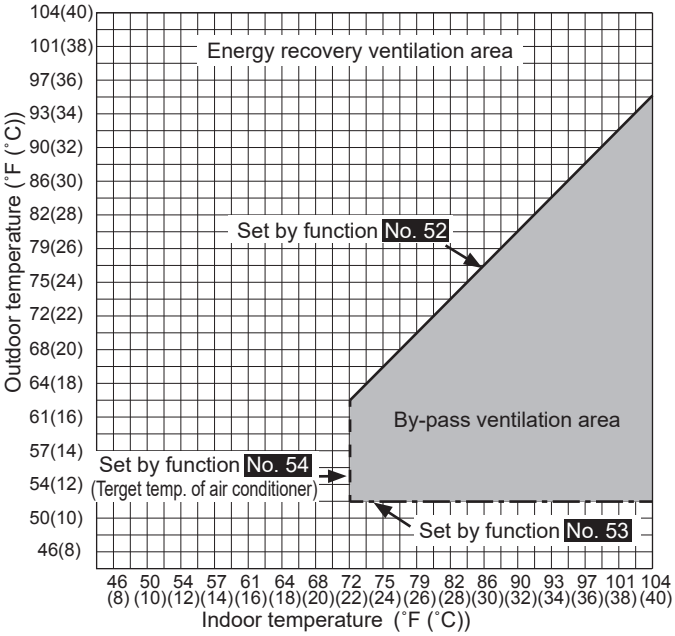

Function No.	Setting Data
52	5 (5 K (9 °F/5 °C))
53	1 (52 ˚F (11 ˚C))
54	7 (72 ˚F (22 ˚C))

When the setting of function No. 53 is low, with using the pre-heater function, the outdoor temperature may be detected as higher and the mode may change to By-pass mode even in winter. Set the setting to 61˚F (16˚C) or more, or use Heat recovery ventilation mode.

No.55, 56 Supply fan power up for Fan speed 4 Exhaust fan power up for Fan speed 4

Use these functions when the fan speed is needed to be up after installation.
Function No. 55 is for supply fan power up and function No. 56 is for exhaust fan power up.
When function No. 1 is on and fan speed already reached the maximum power, this function is N/A.
These functions are N/A from Lossnay unit DIP-SW.
This function is only available for fan speed 4 and when it is set 100%.

DIP-SW		Setting check	TZ-62DR-EA		Setting check	Supply fan power up
SW No.	Setting		Function No.	Setting Data		
N/A	-	-	55	0 (Factory setting)		N/A
	-	-		1		1 level up
	-	-		2		2 level up
	-	-		3		3 level up
	-	-		4		4 level up

DIP-SW		Setting check	TZ-62DR-EA		Setting check	Exhaust fan power up
SW No.	Setting		Function No.	Setting Data		
N/A	-	-	56	0 (Factory setting)		N/A
	-	-		1		1 level up
	-	-		2		2 level up
	-	-		3		3 level up
	-	-		4		4 level up

⚠ CAUTION

- **This function is available when the unit is used at smaller air volume than the rating.**

5. Function settings (continued)

No.60 Pre-heater output setting 1) ON temperature

Set the outdoor temperature for Pre-heater output ON.
When detecting temp. becomes the setting or less, Pre-heater output starts.
This function is N/A from Lossnay unit DIP-SW.

DIP-SW		Setting check	TZ-62DR-EA		Setting check	Outdoor temp. for Pre-heater output ON
SW No.	Setting		Function No.	Setting Data		
N/A	-	-	60	0 (Factory setting)		32 ˚F (0 ˚C) or less
	-	-		1		30 ˚F (-1 ˚C) or less
	-	-		2		28 ˚F (-2 ˚C) or less
	-	-		3		27 ˚F (-3 ˚C) or less
	-	-		4		25 ˚F (-4 ˚C) or less
	-	-		5		23 ˚F (-5 ˚C) or less
	-	-		6		21 ˚F (-6 ˚C) or less
	-	-		7		19 ˚F (-7 ˚C) or less

No.61 Pre-heater output setting 2) OFF interval

Set the Pre-heater output interval. Output stops according to the set hours.
This function is N/A from Lossnay unit DIP-SW.

DIP-SW		Setting check	TZ-62DR-EA		Setting check	Pre-heater output OFF interval
SW No.	Setting		Function No.	Setting Data		
N/A	-	-	61	0 (Factory setting)		1 hr
	-	-		1		2 hrs
	-	-		2		3 hrs
	-	-		3		4 hrs
	-	-		4		5 hrs

No.62 LED usage setting for PZ-70CSW-E during non operation

Wall mount type CO_2 sensor PZ-70CSW-E has LED which indicate the concentration level.
It is possible to select lit or unlit during Lossnay unit is not operating.
Refer to the Installation manual of PZ-70CSW-E for more detail.
This function is N/A from Lossnay unit DIP-SW.

DIP-SW		Setting check	TZ-62DR-EA		Setting check	LED usage setting for PZ-70CSW-E
SW No.	Setting		Function No.	Setting Data		
N/A	-	-	62	0 (Factory setting)		Unlit
	-	-		1		Lit

No.64 Fan speed for air volume “High” input

Set the fan speed setting when receiving “High” signal from remote controllers (e.g. remote controller of City Multi and Mr. Slim, Lossnay simple remote controller) which have High/Low air volume.

DIP-SW		Setting check	TZ-62DR-EA		Setting check	Operating fan speed
SW No.	Setting		Function No.	Setting Data		
SW2-6	-	-	64	0 (Factory setting)		DIP-SW priority
	OFF (Factory setting)			1		Fan speed 4
	ON			2		Fan speed 3

No.65 Fan speed for air volume “Low” input

Set the fan speed setting when receiving “Low” signal from remote controllers (e.g. remote controller of City Multi and Mr. Slim, Lossnay simple remote controller) which have High/Low.

DIP-SW		Setting check	TZ-62DR-EA		Setting check	Operating fan speed
SW No.	Setting		Function No.	Setting Data		
SW2-7	-	-	65	0 (Factory setting)		DIP-SW priority
	OFF (Factory setting)			1		Fan speed 2
	ON			2		Fan speed 1

No.66 CO_2 sensor or BMS setting

According to the type of external input, set this item.
Lossnay changes fan speed according to input voltage to CN26 when 3rd party’s CO_2 sensor or BMS is setting.
When connecting with PZ-70CSW-E or PZ-70CSB-E, refer to their manuals for detail.
Do not set other than below settings.
* The function of [CO_2 control: No/Yes] on TZ-62DR-EA is not applicable for this product. Do not change that setting.

Note

For F940R and F1200R, PZ-70CSB-E can be installed only in the lower unit. Lossnay unit controls its fan speed according to the lower unit detecting CO_2 concentration. Even when actual CO_2 concentration of the upper unit is high, Lossnay does not change its fan speed.

DIP-SW		Setting check	TZ-62DR-EA		Setting check	CO_2 sensor or BMS setting
SW No.	Setting		Function No.	Setting Data		
SW5-6 SW5-7 SW5-8	-	-	66	0 (Factory setting)		DIP-SW priority
	5-6 OFF 5-7 OFF 5-8 OFF (Factory setting)			1		No external fan speed control input
	5-6 OFF 5-7 OFF 5-8 ON			2		3rd party's CO_2 sensor (0-10 VDC equals to 0-2000 ppm)
	5-6 OFF 5-7 ON 5-8 ON			4		BMS Refer to pattern Z below
	5-6 ON 5-7 OFF 5-8 OFF			5		PZ-70CSW-E
	5-6 ON 5-7 ON 5-8 OFF			7		PZ-70CSB-E

[Pattern Z]
Lossnay changes fan speed as the table below. (Connection example: BMS (Building Management System))

Input voltage[VDC]	Fan speed	Fan speed changing from Remote controller
0 - 1.0	-	Available
1.5 - 2.5	1	N/A
3.5 - 4.5	2	N/A
5.5 - 7	3	N/A
8.5 - 10	4	N/A

When the input voltage is in-between, it will cause unstable operation.

5. Function settings (continued)

No.67 Threshold minutes for PZ-70CSW-E LED

LED turns from orange (MID) to red (HIGH) when the CO_2 level is kept over the limit concentration for decided minutes.
The threshold minutes can be changed.
Refer to the Installation manual of PZ-70CSW-E for more detail.
This function is N/A from Lossnay unit DIP-SW.

DIP-SW		Setting check	TZ-62DR-EA		Setting check	Threshold minutes for PZ-70CSW-E LED
SW No.	Setting		Function No.	Setting Data		
N/A	-	-	67	0		10 min
	-	-		1		15 min
	-	-		2 (Factory setting)		20 min
	-	-		3		25 min
	-	-		4		30 min

No.68 Threshold concentration for PZ-70CSW-E LED

The threshold concentration for wall mounted CO_2 sensor LED from green (LOW) to orange (MID) can be changed.
Refer to the Installation manual of PZ-70CSW-E for more detail.
This function is N/A from Lossnay unit DIP-SW.

DIP-SW		Setting check	TZ-62DR-EA		Setting check	Threshold concentration for PZ-70CSW-E LED
SW No.	Setting		Function No.	Setting Data		
N/A	-	-	68	0		1000 ppm
	-	-		1		1100 ppm
	-	-		2		1200 ppm
	-	-		3		1300 ppm
	-	-		4		1400 ppm
	-	-		5 (Factory setting)		1500 ppm
	-	-		6		1600 ppm
	-	-		7		1700 ppm
	-	-		8		1800 ppm
	-	-		9		1900 ppm
	-	-		10		2000 ppm

No.69 Emergency stop setting

This function can select the priority of Remote OFF signal to CN32.
When the emergency stop is selected and Lossnay receives remote off signal, Lossnay does not operate Night purge, after cooling or some other operations until remote off signal stops.
This function is N/A from Lossnay unit DIP-SW.

DIP-SW		Setting check	TZ-62DR-EA		Setting check	Mode	Lossnay operation
SW No.	Setting		Function No.	Setting Data			
N/A	-	-	69	0 (Factory setting)		Emergency stop	When stopped by Remote OFF input, Night purge, after cooling and some other operation does **NOT** work.
	-	-		1		Normal stop	When stopped by Remote OFF input, Night purge, after cooling and some other operation does work.

- When installing the centralized management devices (including the system controller) in Mitsubishi Electric Air-Conditioner Network System (MELANS), perform emergency stop by the centralized management devices. In this case, do not use the function No. 69.

5. Function settings (continued)

No.73 -78, 87, 88 Airflow

Adjust the output of the fan speed. This function can also be set on the Airflow settings screen of the TZ-62DR-EA.
This function is N/A from Lossnay unit DIP-SW.

TZ-62DR-EA		Setting check	Fan output	Fan speed	Fan
Function No.	Setting Data				
87	0 (Factory setting)		100%	4	SA
	1		95%		
	2		90%		
	3		85%		
	4		80%		
	5		75%		
	6		70%		
	7		65%		
	8		60%		
	9		55%		
	10		50%		
	11		45%		
	12		40%		
	13		35%		
	14		30%		
	15		25%		
73	0		100%	3	SA
	1		95%		
	2		90%		
	3		85%		
	4		80%		
	5 (Factory setting)		75%		
	6		70%		
	7		65%		
	8		60%		
	9		55%		
	10		50%		
	11		45%		
	12		40%		
	13		35%		
	14		30%		
	15		25%		
74	0		100%	2	SA
	1		95%		
	2		90%		
	3		85%		
	4		80%		
	5		75%		
	6		70%		
	7		65%		
	8		60%		
	9		55%		
	10 (Factory setting)		50%		
	11		45%		
	12		40%		
	13		35%		
	14		30%		
	15		25%		

TZ-62DR-EA		Setting check	Fan output	Fan speed	Fan
Function No.	Setting Data				
75	0		100%	1	SA
	1		95%		
	2		90%		
	3		85%		
	4		80%		
	5		75%		
	6		70%		
	7		65%		
	8		60%		
	9		55%		
	10		50%		
	11		45%		
	12		40%		
	13		35%		
	14		30%		
	15 (Factory setting)		25%		
88	0 (Factory setting)		100%	4	EA
	1		95%		
	2		90%		
	3		85%		
	4		80%		
	5		75%		
	6		70%		
	7		65%		
	8		60%		
	9		55%		
	10		50%		
	11		45%		
	12		40%		
	13		35%		
	14		30%		
	15		25%		
76	0		100%	3	EA
	1		95%		
	2		90%		
	3		85%		
	4		80%		
	5 (Factory setting)		75%		
	6		70%		
	7		65%		
	8		60%		
	9		55%		
	10		50%		
	11		45%		
	12		40%		
	13		35%		
	14		30%		
	15		25%		

TZ-62DR-EA		Setting check	Fan output	Fan speed	Fan
Function No.	Setting Data				
77	0		100%	2	EA
	1		95%		
	2		90%		
	3		85%		
	4		80%		
	5		75%		
	6		70%		
	7		65%		
	8		60%		
	9		55%		
	10 (Factory setting)		50%		
	11		45%		
	12		40%		
	13		35%		
	14		30%		
	15		25%		
78	0		100%	1	EA
	1		95%		
	2		90%		
	3		85%		
	4		80%		
	5		75%		
	6		70%		
	7		65%		
	8		60%		
	9		55%		
	10		50%		
	11		45%		
	12		40%		
	13		35%		
	14		30%		
	15 (Factory setting)		25%		

- Fan output percentage of Fan speed 4 cannot be set to lower values than that of Fan speed 3.
  Example: When function No. 73 is set to “5” (75%), the setting data for function No. 87 can be selected from “0” (100%) to “5” (75%).
- Fan output percentage of Fan speed 3 cannot be set to higher values than that of Fan speed 4, or lower values than that of Fan speed 2.
  Likewise, fan output percentage of Fan speed 2 cannot be set to higher values than that of Fan speed 3, or lower values than that of Fan speed 1.
  Example: When function No. 87 is set to “2” (90%) and function No. 74 is set to “7” (65%), the setting data for function No. 73 can be selected from “2” (90%) to “7” (65%).
- Fan output percentage of Fan speed 1 cannot be set to higher values than that of Fan speed 2.
  Example: When function No. 74 is set to “5” (75%), the setting data for function No. 75 can be selected from “5” (75%) to “15” (25%).
- Function No. 55 and No. 56 are available only when Fan output percentage of Fan speed 4 is set to “0” (100%).

5. Function settings (continued)

No.83, 84 Filter maintenance interval setting

Filter cleaning sign is displayed on the remote controller according to the set interval in this function.
The interval can be set from 100 hrs to 9900 hrs depending on the site situation.
This function can also be set on the Maintenance interval settings screen of the TZ-62DR-EA.
This function is N/A from Lossnay unit DIP-SW.

DIP-SW		Setting check	TZ-62DR-EA		Setting check	Filter maintenance interval setting - Thousands digit
SW No.	Setting		Function No.	Setting Data		
N/A	-	-	83	0		0
	-	-		1		1
	-	-		2		2
	-	-		3 (Factory setting)		3
	-	-		4		4
	-	-		5		5
	-	-		6		6
	-	-		7		7
	-	-		8		8
	-	-		9		9

DIP-SW		Setting check	TZ-62DR-EA		Setting check	Filter maintenance interval setting - Hundreds digit
SW No.	Setting		Function No.	Setting Data		
N/A	-	-	84	0 (Factory setting)		0
	-	-		1		1
	-	-		2		2
	-	-		3		3
	-	-		4		4
	-	-		5		5
	-	-		6		6
	-	-		7		7
	-	-		8		8
	-	-		9		9

No.85, 86 Lossnay core maintenance interval setting

Lossnay core maintenance sign is displayed on the remote controller according to the set interval in this function.
The interval can be set from 100 hrs to 9900 hrs depending on the site situation.
This function can also be set on the Maintenance interval settings screen of the TZ-62DR-EA.
This function is N/A from Lossnay unit DIP-SW.

DIP-SW		Setting check	TZ-62DR-EA		Setting check	Lossnay core maintenance interval setting - Thousands digit
SW No.	Setting		Function No.	Setting Data		
N/A	-	-	85	0		0
	-	-		1		1
	-	-		2		2
	-	-		3		3
	-	-		4		4
	-	-		5		5
	-	-		6 (Factory setting)		6
	-	-		7		7
	-	-		8		8
	-	-		9		9

DIP-SW		Setting check	TZ-62DR-EA		Setting check	Lossnay core maintenance interval setting - Hundreds digit
SW No.	Setting		Function No.	Setting Data		
N/A	-	-	86	0 (Factory setting)		0
	-	-		1		1
	-	-		2		2
	-	-		3		3
	-	-		4		4
	-	-		5		5
	-	-		6		6
	-	-		7		7
	-	-		8		8
	-	-		9		9

No.89, 90 CO_2 sensor setting - maximum side

It is possible to set the CO_2 concentration which fan speed turn into 4.
When it is necessary to set 50 ppm, set Function No. 90 as 1.
This function can also be set on the CO_2 control setting screen of the TZ-62DR-EA.
(For example, the target is 950 ppm, Function No. 89 is 3 and No. 90 is 1.)
This function is N/A from Lossnay unit DIP-SW.

DIP-SW		Setting check	TZ-62DR-EA		Setting check	CO_2 sensor setting - maximum side - Hundreds digit
SW No.	Setting		Function No.	Setting Data		
N/A	-	-	89	0		600 ppm
	-	-		1		700 ppm
	-	-		2		800 ppm
	-	-		3		900 ppm
	-	-		4 (Factory setting)		1000 ppm
	-	-		5		1100 ppm
	-	-		6		1200 ppm
	-	-		7		1300 ppm
	-	-		8		1400 ppm
	-	-		9		1500 ppm
	-	-		10		1600 ppm
	-	-		11		1700 ppm
	-	-		12		1800 ppm
	-	-		13		1900 ppm
	-	-		14		2000 ppm

DIP-SW		Setting check	TZ-62DR-EA		Setting check	CO_2 sensor setting - maximum side - Tens digits
SW No.	Setting		Function No.	Setting Data		
N/A	-	-	90	0 (Factory setting)		0 ppm
	-	-		1		50 ppm

No.91, 92 CO_2 sensor setting - minimum side

It is possible to set the CO_2 concentration which fan speed turn into 1.
When it is necessary to set 50 ppm, set Function No. 92 as 1.
This function can also be set on the CO_2 control setting screen of the TZ-62DR-EA.
(For example, the target is 950 ppm, Function No. 91 is 6 and No. 92 is 1.)
This function is N/A from Lossnay unit DIP-SW.

DIP-SW		Setting check	TZ-62DR-EA		Setting check	CO_2 sensor setting - minimum side - Hundreds digits
SW No.	Setting		Function No.	Setting Data		
N/A	-	-	91	0		300 ppm
	-	-		1 (Factory setting)		400 ppm
	-	-		2		500 ppm
	-	-		3		600 ppm
	-	-		4		700 ppm
	-	-		5		800 ppm
	-	-		6		900 ppm
	-	-		7		1000 ppm
	-	-		8		1100 ppm
	-	-		9		1200 ppm
	-	-		10		1300 ppm
	-	-		11		1400 ppm
	-	-		12		1500 ppm
	-	-		13		1600 ppm
	-	-		14		1700 ppm

DIP-SW		Setting check	TZ-62DR-EA		Setting check	CO_2 sensor setting - minimum side - Tens digits
SW No.	Setting		Function No.	Setting Data		
N/A	-	-	92	0		0 ppm
	-	-		1 (Factory setting)		50 ppm

5. Function settings (continued)

No.93 CO_2 sensor correction

CO_2 concentration can be corrected when PZ-70CSW-E or PZ-70CSB-E is connected.
In this function, the control value of CO_2 level is corrected.
On the other hand, No. 44 is change the displayed CO_2 level only.
This function is N/A from Lossnay unit DIP-SW.

DIP-SW		Setting check	TZ-62DR-EA		Setting check	CO_2 sensor analogue correction
SW No.	Setting		Function No.	Setting Data		
N/A	-	-	93	0		-250 ppm
	-	-		1		-200 ppm
	-	-		2		-150 ppm
	-	-		3		-100 ppm
	-	-		4		-50 ppm
	-	-		5 (Factory setting)		±0 ppm
	-	-		6		50 ppm
	-	-		7		100 ppm
	-	-		8		150 ppm
	-	-		9		200 ppm
	-	-		10		250 ppm

No.100 Initialization (No.1～99)

Set to initialize the remote TZ-62DR-EA setting.
All settings which are changed by users are cancelled.

DIP-SW		Setting check	TZ-62DR-EA		Setting check	Initialization
SW No.	Setting		Function No.	Setting Data		
N/A	-	-	100	0 (Factory setting)		N/A
	-	-		1		Available

6. Check points after installation work

After installation work has been completed, check the following points once again.
If any failure is detected, be sure to fix it.
Check the following points before trial operation, and place a check mark ☑ in the corresponding check box.

	Reference page	Check box
(1) Check points - Main unit installation work		
The duct connecting flanges are securely attached by using the supplied screws.	*4.1 Hanging the Lossnay unit*	
The length of 3.3 ft. (1.0 m) or more (for F300R, F380R)/8.2 ft (2.5 m) or more (for F470R, F600R)/9.8 ft (3 m) or more (for F940R, F1200R) is provided for the outdoor side ducts (OA, EA) from a building wall surface.	*3. Standard installation examples* *4.2 Duct works*	
A downward gradient of 1/30 or more toward a building wall is provided for the outdoor side ducts (OA, EA).	*3. Standard installation examples* *4.2 Duct works*	
The two outdoor side ducts (OA, EA) are covered with a heat-insulating material.	*4. Installation method*	
(2) Check points - Wiring work		
A combination of power supply voltage, model name, and remote controller is correct.	*4.3 Electrical installation*	
The wires are correctly connected according to the wire connection diagram.	*4.3 Electrical installation*	
The wires are securely connected to the terminal blocks.	*4.3 Electrical installation*	
The wires are securely fixed.	*4.3 Electrical installation*	
The connectors on the circuit board are securely connected.	*4.3 Electrical installation*	
The grounding cable is installed.	*4.3 Electrical installation*	
The cables are correctly fixed by using the cord clips and cable glands.	*4.3 Electrical installation*	
In terms of size and specification, the proper power supply cable and transmission cables are used.	*4.3 Electrical installation*	
(3) Check points - Function setting		
The “Main” Lossnay is correctly set.	*5. Function settings*	
The address setting switches (SW11, SW12) are correctly set.	*5. Function settings*	
The function selection switches (SW2, SW5) are correctly set.	*5. Function settings*	
The function settings by the remote controller are correct. (For details, refer to the Installation Manual of the remote controller TZ-62DR-EA.)	*5. Function settings*	

To prevent early failures, be sure to check the check points after installation work.

7. Trial operation

After the system has been installed and before the ceiling panel is installed, make sure that wires are properly connected, then test the system's operation, referring to the operation manual for the remote controller.

1. Trial operation using the remote controller (TZ-62DR-EA)

Follow the procedure shown in the operation manual for the remote controller the functions below.

(1) Start operation
(2) Fan speed selection
(3) Ventilation mode selection
(4) Stop operation

2. Lossnay trial operation

This function can be used in the following situations.

- When there is no remote controller installed for operating the Lossnay
- When heater output, malfunction monitor output, operation monitor output, and other output are connected
- When the outdoor temperature is 46.4 ºF (8 ºC) or lower (To check By-pass damper operation)

(1) Supply power to the Lossnay unit.
(2) Turn the trial operation switch (DIP-SW SW2-1) "On."

Operation of Fan Speed and Ventilation mode

					Minutes	0						1						2						3						4					
					Seconds	0	10	20	30	40	50	0	10	20	30	40	50	0	10	20	30	40	50	0	10	20	30	40	50	0	10	20	30	40	50
TM3			PZ-4GS-E & TZ-62DR-EA		Fan speed	STOP	4					STOP						4																	
DIP-SW	Function No.	Setting data	Function No.	Setting data	Ventilation mode	Bypass												Lossnay																	
5-1 OFF 5-2 OFF	12	1	13-16	0	Lossnay operation monitor	ON																													
5-1 ON 5-2 OFF		2		1	Malfunction monitor output	ON																													
5-1 OFF 5-2 ON		3		2	Bypass monitor output	OFF	ON					OFF																							
5-1 ON 5-2 ON		4		3	SA fan monitor output	OFF	ON					OFF						ON																	
-		5		4	EA fan monitor output	OFF	ON					OFF						ON																	
-		6		5	Pre-heater output	OFF																								ON					
-		7		6	SA fan monitor output with delay operation (for After heater)	OFF																		ON											

Error code "0900" appears on the remote controller.
The timing in the chart is a general guideline.

(3) Check each function is operating normally.
(4) Check the Lossnay unit operates without abnormal vibration and noise.
(5) Turn the trial operation switch (DIP-SW SW2-1) "Off."

3. Lossnay trial operation in a whole system

3.1 For Interlock system with air conditioners or external devices

- Use the remote controller for the air conditioner or the operating switches for the external device to check that the air conditioner and Lossnay are interlocked.
- When delay start time is set (when City Multi or Mr. Slim that is connected using a Slim-Lossnay interlocking cable starts operating), check Lossnay operation after the delay start time has passed.

3.2 For MELANS system

- Check Lossnay operation by using the Mitsubishi Electric Air-Conditioner Network System (MELANS).

7. Trial operation (continued)

4. If trouble occurs during trial operation

<table>
<tr><th>Symptom</th><th>Remedy</th></tr>
<tr><td>Lossnay does not operate even when the operation switch of the remote controller (TZ-62DR-EA) is pressed.</td><td>• Check the power supply. (The specified power supply is single-phase 208-230 V 60 Hz)
• Check for a short circuit or disconnection in the transmission cable. (Check that the voltage between terminals in the transmission cables is 10 to 13 VDC for the TZ-62DR-EA.)
• Check that a clearance of 2” (5 cm) is provided between the transmission cable and the power supply cable and other transmission cables.
• Operate Lossnay independently using the trial operation switch (SW2-1) to see if it operates properly or not.
Lossnay operates ⇒ Check the signal lines
Lossnay doesn’t operate ⇒ Check the power supply
• Check if there are three or more remote controller connected. (The maximum is two.)</td></tr>
<tr><td>When M-NET is used, the Lossnay does not operate by M-NET system controller.</td><td>• Check the power supply. (Specified power supply: single-phase 208-230 V 60 Hz, cable diameter, switch capacity
• Check if the power supply unit is connected or not, and if the power is supplied or not (For a system with Lossnay only, it is necessary to install the power supply unit.)
• Check the transmission cable for short-circuit or broken wire (Check if 20 - 30 VDC is detected between the terminals of transmission cable).
• Check that a clearance of 2” (5 cm) is provided between the transmission cable and the power supply cable and other transmission cables.
• Operate Lossnay independently to see if it operates properly or not.
Lossnay operates ⇒ Inspect the transmission cable
Lossnay doesn’t operate ⇒ Check the power supply
• Check Lossnay registration condition in the system remote controller.</td></tr>
<tr><td>Air conditioner indoor unit or external device does not interlock.</td><td>• Check if the pulse input switch (SW2-2) is off. (Can be set from TZ-62DR-EA)
• Check the overall cable length between the indoor unit or external device and Lossnay. (Refer to technical manuals or other such documents.)
• Check the connections at the external control input terminal block (TM2).
In the case of voltage charged 12 or 24 VDC output device: Connect to external control input terminals ① and ②.
In the case of Volt-free contact output device: Connect to external control input terminals Y and Z.
In the case of Mr. Slim with Slim-Lossnay connection cable: Connect to external control input terminals ① and ②.
• Perform the registration using the remote controller for the air conditioner or MELANS. (Refer to the installation instructions for the remote controller for the air conditioner or MELANS.)
• Check if the delay start time has been set.
• Check the following items after removing the transmission cable from external device.
<table>
<tr><th></th><th>Operation signal</th><th>Stop signal</th></tr>
<tr><td>Charged 12 or 24 VDC output device</td><td>12 or 24 VDC</td><td>0 VDC</td></tr>
<tr><td>Volt-free contact output device</td><td>Resistance: 0 Ω</td><td>Unlimited resistance Ω</td></tr>
<tr><td>Mr. Slim with Slim-Lossnay connection cable.</td><td>2 to 6 VDC (pulse signal)</td><td>2 to 6 VDC (pulse signal)</td></tr>
</table>
• When multiple Lossnay units are connected, check the external signal is inputted into the main unit.</td></tr>
<tr><td>Lossnay does not stop.</td><td>• Check that the trial operation switch (SW2-1) is set to off.</td></tr>
<tr><td>The inspection indicator lamp (LED 1 Green) in the control box flashes.</td><td>
<table>
<tr><td>1 flash</td><td>Fault on supply fan motor</td><td rowspan="12">Turn the power off and consult your dealer.</td></tr>
<tr><td>2 flashes</td><td>Fault on exhaust fan motor</td></tr>
<tr><td>4 flashes</td><td>Fault on OA thermistor</td></tr>
<tr><td>5 flashes</td><td>Fault on RA thermistor</td></tr>
<tr><td>6 flashes</td><td>Fault on supply fan motor</td></tr>
<tr><td>7 flashes</td><td>Fault on exhaust fan motor</td></tr>
<tr><td>8 flashes</td><td>Fault on Pre-heater capacity or relay</td></tr>
<tr><td>9 flashes</td><td>Fault on remote controller communication</td></tr>
<tr><td>10 flashes</td><td>Fault on function setting</td></tr>
<tr><td>11 flashes</td><td>Fault on power supply to remote controller</td></tr>
<tr><td>12 flashes</td><td>Fault on CO_2 sensor, PZ-70CSB-E or PZ-70CSW-E</td></tr>
</table>
• 15 or 30 minutes in the delay start setting, LED lits ON.
• LED blinks just after power supply ON.</td></tr>
<tr><td>The inspection indicator lamp (LED 2 Red) in the control box flashes.</td><td>
<table>
<tr><td>1 to 8 flashes</td><td>Error in M-NET communication</td><td>Turn off the power and immediately contact your dealer.</td></tr>
</table></td></tr>
</table>

■ When an error code blinks on the remote controller, follow the procedures shown in the installation and operating manuals provided with the remote controller.

■ In case of operating Lossnay unit by external input, operate after approximately 2 minutes of turning on the power for the Lossnay.