TPKA0A0181LA00A & TRUZA0181KA70BA
18,000 BTU/H WALL MOUNT
18,000 BTU/H HEAT PUMP UNIVERSAL OUTDOOR

Job Name:	
System Reference:	Date:

Indoor Unit.....TPKA0A0181LA00A

Outdoor Unit.....TRUZA0181KA70BA

INDOOR UNIT FEATURES
- Selectable high sensible vs high latent capacity mode
- UL 60335-2-40 compliant
- Sleek, compact design
- Simple installation
- Airflow direction control
- Auto fan mode
- Suitable for: server rooms, daycare centers, classrooms, churches, small offices, and more
- Multiple control options available:
  - kumo cloud® smart device app for remote access
  - Third-party interface options
  - Wired or wireless controllers

OUTDOOR UNIT FEATURES
- Variable speed INVERTER-driven compressor
- Power receiver pre-charged with refrigerant volume for piping length up to 70 ft
- Low ambient cooling down to 0°F providing 100% capacity
- 24-hour continuous operation (cooling mode)
- High pressure protection
- Fast restart
- Superior energy and operational efficiency
- Seacoast protection on heat exchanger and base panel (rated for 2,000 hours in accordance with ASTM B117 testing)

Specifications are subject to change without notice.

© 2022 Mitsubishi Electric Trane HVAC US LLC. All rights reserved.

SPECIFICATIONS: TPKA0A0181LA00A & TRUZA0181KA70BA

Cooling at 95°F[1]	Maximum Capacity	BTU/H	18,000
	Rated Capacity	BTU/H	18,000
	Minimum Capacity	BTU/H	5,600
	Maximum Power Input	W	1,680
	Rated Power Input	W	1,680
	Moisture Removal	Pints/h	5.8
	Sensible Heat Factor		0.73
	Power Factor [208V / 230V]	%	96.7 / 96.7
Heating at 47°F[2]	Maximum Capacity	BTU/H	22,000
	Rated Capacity	BTU/H	19,000
	Minimum Capacity	BTU/H	5,400
	Maximum Power Input	W	2,150
	Rated Power Input	W	1,640
	Power Factor [208V / 230V]	%	96.7 / 96.7
Heating at 17°F[3]	Maximum Capacity	BTU/H	13,600
	Rated Capacity	BTU/H	13,600
	Maximum Power Input	W	1,560
	Rated Power Input	W	1,560
Heating at 5°F[4]	Maximum Power Input	W	1,110
Efficiency	SEER		19.8
	EER[1]		10.7
	HSPF [IV]		11.2
	COP at 47°F[2]		3.4
	COP at 17°F at Maximum Capacity[3]		2.5
	ENERGY STAR® Certified		No
Electrical	Voltage, Phase, Frequency		208/230, 1, 60
	Guaranteed Voltage Range	V AC	198 - 253
	Voltage: Indoor - Outdoor, S1-S2	V AC	208/230
	Voltage: Indoor - Outdoor, S2-S3	V DC	24
	Short-circuit Current Rating [SCCR]	kA	5
	Recommended Fuse/Breaker Size (Oudoor)	A	15
	Recommended Wire Size [Indoor - Outdoor]	AWG	14
	Power Supply		Indoor unit is powered by the outdoor unit
Indoor Unit	MCA	A	1.0
	Fan Motor Full Load Amperage	A	0.19
	Fan Motor Type		DC Motor
	Airflow Rate at Cooling, Dry	CFM	265–310–385–455
	Airflow Rate at Cooling, Wet	CFM	215–255–320–375
	Airflow Rate at Heating, Dry	CFM	265–310–385–455
	Sound Pressure Level [Cooling]	dB[A]	34–39–44–48
	Sound Pressure Level [Heating]	dB[A]	34–37–40–43
	Drain Pipe Size	In. [mm]	5/8 [16]
	Condensate Lift Mechanism, Maximum Distance	In. [mm]	19-11/16 [850]
	Coating on Heat Exchanger		—
	External Finish Color		White Munsell 0.7PB 9.2/0.4
	Unit Dimensions	W x D x H: In. [mm]	35-23/64 x 9-11/32 x 11-25/32 [898 x 237 x 299]
	Package Dimensions	W x D x H: In. [mm]	38-3/16 x 13-25/64 x 14-11/64 [970 x 340 x 360]
	Unit Weight	Lbs. [kg]	28 [12.7]
	Package Weight	Lbs. [kg]	32 [14.5]
Indoor Unit Operating Temperature Range	Cooling Intake Air Temp [Maximum / Minimum]*	°F	90 DB, 73 WB / 66 DB, 59 WB
	Heating Intake Air Temp [Maximum / Minimum]	°F	82 DB / 50 DB

NOTES:

AHRI Rated Conditions	[1]Cooling (Indoor // Outdoor)	°F	80 DB, 67 WB // 95 DB, 75 WB
(Rated data is determined at a fixed compressor speed)	[2]Heating at 47°F (Indoor // Outdoor)	°F	70 DB, 60 WB // 47 DB, 43 WB
	[3]Heating at 17°F (Indoor // Outdoor)	°F	70 DB, 60 WB // 17 DB, 15 WB

Select high sensible versus high latent capacity mode via function setting mode 08, “Fan speed” (accessible through Touch MA, Deluxe MA, kumo touch and kumo cloud app control options):

- ”High ceiling” mode = high sensible capacity
  - » Mode 08, setting 3 (factory default)
- ”Standard” mode = high latent capacity
  - » Mode 08, setting 2

*Outdoor Unit Operating Temperature Range (Cooling Air Temp (Maximum / Minimum)):

- Wind baffles required to operate below 23˚F DB in cooling mode.
- Heat pump system with wind baffle: 0°F - 115°F.
- Refer to wind baffle documentation for further information.

**Outdoor Unit Operating Temperature Range (Cooling Thermal Lock-out / Re-start Temperatures; Heating Thermal Lock-out / Re-start Temperatures):

- System cuts out in heating mode to avoid thermistor error and automatically restarts at these temperatures.

Specifications are subject to change without notice.

© 2022 Mitsubishi Electric Trane HVAC US LLC. All rights reserved.

SPECIFICATIONS: TPKA0A0181LA00A & TRUZA0181KA70BA

Outdoor Unit	MCA	A	11.0
	MOCP	A	28
	Fan Motor Full Load Amperage	A	0.5
	Fan Motor Output	W	46
	Airflow Rate [Cooling / Heating]	CFM	1590 / 1590
	Refrigerant Control		LEV
	Defrost Method		Reverse Cycle
	Coating on Heat Exchanger		Blue Fin Coating (BS Model only)
	Sound Pressure Level, Cooling[1]	dB(A)	44
	Sound Pressure Level, Heating[2]	dB(A)	46
	Compressor Type		INVERTER-driven twin rotary
	Compressor Model		SNB130FQCMC-L1
	Compressor Rated Load Amps	A	7
	Compressor Locked Rotor Amps	A	12.0
	Compressor Oil [Type // Charge]	oz.	FV50S // 16
	External Finish Color		Ivory Munsell 3Y 7.8/1.1
	Base Pan Heater		N/A
	Unit Dimensions	W x D x H: In. [mm]	31-13/16 (2+7/16) x 11-13/16 x 24-13/16 [809 (+62) x 300 x 630]
	Package Dimensions	W x D x H: In. [mm]	37-1/16 x 16-3/16 x 27-7/16 [941 x 411 x 697]
	Unit Weight	Lbs. [kg]	100 [45]
	Package Weight	Lbs. [kg]	112 [51]
Outdoor Unit Operating Temperature Range	Cooling Air Temp [Maximum / Minimum]*	°F	115 DB / 0 DB
	Heating Air Temp [Maximum / Minimum]	°F	70 DB, 59 WB / 12 DB, 14 WB
	Heating Thermal Lock-out / Re-start Temperatures**	°F	8 / 12
Refrigerant	Maximum Charge Quantity	Lbs, oz	4.0, 14.0
	Initial Charge Quantity	Ft. [m]	70.0 [21.0]
	Additional Refrigerant Charge Per Additional Piping Length	oz./Ft. [g/m]	0.2 [19]
Piping	Gas Pipe Size O.D. [Flared]	In.[mm]	1/2 [12.7]
	Liquid Pipe Size O.D. [Flared]	In.[mm]	1/4 [6.35]
	Maximum Piping Length	Ft. [m]	100 [30]
	Maximum Height Difference	Ft. [m]	100 [30]
	Maximum Number of Bends		15

NOTES:

AHRI Rated Conditions	[1]Cooling (Indoor // Outdoor)	°F	80 DB, 67 WB // 95 DB, 75 WB
(Rated data is determined at a fixed compressor speed)	[2]Heating at 47°F (Indoor // Outdoor)	°F	70 DB, 60 WB // 47 DB, 43 WB
	[3]Heating at 17°F (Indoor // Outdoor)	°F	70 DB, 60 WB // 17 DB, 15 WB

Select high sensible versus high latent capacity mode via function setting mode 08, “Fan speed” (accessible through Touch MA, Deluxe MA, kumo touch and kumo cloud app control options):

- ”High ceiling” mode = high sensible capacity
  - » Mode 08, setting 3 (factory default)
- ”Standard” mode = high latent capacity
  - » Mode 08, setting 2

*Outdoor Unit Operating Temperature Range (Cooling Air Temp (Maximum / Minimum)):

- Wind baffles required to operate below 23°F DB in cooling mode.
- Heat pump system with wind baffle: 0°F - 115°F.
- Refer to wind baffle documentation for further information.

**Outdoor Unit Operating Temperature Range (Cooling Thermal Lock-out / Re-start Temperatures; Heating Thermal Lock-out / Re-start Temperatures):

- System cuts out in heating mode to avoid thermistor error and automatically restarts at these temperatures.

© 2022 Mitsubishi Electric Trane HVAC US LLC. All rights reserved.

INDOOR UNIT ACCESSORIES: TPKA0A0181LA00A

Control Interface	3-Pin Connector	☐ PAC-715AD
	BACnet® and Modbus® Interface	☐ PAC-UKPRC001-CN-1
	IT Extender	☐ PAC-WHS01IE-E
	kumo station® for kumo cloud®	☐ TAC-WHS01HC-E
	Lockdown bracket for remote controller	☐ RCMKP1CB
	Thermostat Interface	☐ PAC-US444CN-1
	Thermostat Interface	☐ PAC-US445CN-1
	USNAP Adapter	☐ PAC-WHS01UP-E
	Wireless Interface for kumo cloud®	☐ PAC-USWHS002-WF-2
Remote Sensor	Flush Mount Remote Temperature Sensor	☐ PAC-USSEN002-FM-1
	Flush Mount Temperature Sensor	☐ PAC-USSEN001-FM-1
	Remote Temperature Sensor	☐ PAC-SE41TS-E
	Wireless temperature and humitity sensor for kumo cloud®	☐ PAC-USWHS003-TH-1
Wired Remote Controller	Deluxe Wired MA Remote Controller†	☐ TAR-40MAAU
	Simple MA Remote Controller†	☐ TAC-YT53CRAU-J
	Touch MA Controller†	☐ TAR-CT01MAU-SB
Wireless Remote Controller	kumo touch™ RedLINK™ Wireless Controller	☐ MHK2
	Wireless MA Remote Controller	☐ TAR-FL32MA-E
Condensate	Blue Diamond (Advanced) Mini Condensate Pump w/ Reservoir & Sensor (208/230V) [recommended]	☐ X87-721
	Blue Diamond (MicroBlue) Mini Condensate Pump (110/208/230V) up to 18,000 BTU/H	☐ X86-003
	Blue Diamond Sensor Extension Cable — 15 Ft.	☐ C13-103
	Drain Pan Level Sensor/Control	☐ SS610E
	Fascia Kit for MicroBlue Pump, mounts the MicroBlue and sensor directly beneath indoor unit	☐ T18-016
	Refco Condensate Pump (100-240 VAC)	☐ GOBI-II
	Refco Condensate Pump (100-240 VAC) up to 120,000 BTU/H	☐ COMBI
	Sauermann Condensate Pump	☐ SI30-230
Disconnect Switch	(30A/600V/UL) [fits 2” X 4” utility box] - Black	☐ TAZ-MS303
	(30A/600V/UL) [fits 2” X 4” utility box] - White	☐ TAZ-MS303W
Drain Hose	Flexible Mini-Split Drain Hose	☐ DRX-16
Lineset	100’ x 1/4” x 100’ / 1/2” Lineset (Twin-Tube Insulation)	☐ MLS141212T-100
	15’ x 1/4” x 15’ / 1/2” Lineset (Twin-Tube Insulation)	☐ MLS141212T-15
	30’ x 1/4” x 30’ / 1/2” Lineset (Twin-Tube Insulation)	☐ MLS141212T-30
	50’ x 1/4” x 50’ / 1/2” Lineset (Twin-Tube Insulation)	☐ MLS141212T-50
	65’ x 1/4” x 65’ / 1/2” Lineset (Twin-Tube Insulation)	☐ MLS141212T-65

© 2022 Mitsubishi Electric Trane HVAC US LLC. All rights reserved.

OUTDOOR UNIT ACCESSORIES: TRUZA0181KA70BA

Air Outlet Guide	Air Outlet Guide	☐ PAC-SJ07SG-E
Centralized Drain Pan	Centralized Drain Pan	☐ PAC-SG63DP-E
	Drain Pan	☐ PAC-SG64DP-E
Control/Service Tool	Control/Service Tool	☐ PAC-SK52ST
	M- & P-Series Maintenance Tool Cable Set	☐ M21EC0397
	USB/UART Conversion Cable (Required for all laptop connection)	☐ M21EC1397
Drain Socket	Drain Socket	☐ MAC-871DS
Hail Guards	Hail Guard	☐ HG-A5
M-NET Converter	M-NET Converter	☐ PAC-SJ96MA-E
Mounting Pad	Condensing Unit Mounting Pad: 16” x 36” x 3”	☐ ULTRILITE1
Stand	18” Single Fan Stand	☐ QSMS1801M
	24” Single Fan Stand	☐ QSMS2401M
	Condenser Wall Bracket	☐ QSWB2000M-1
	Condenser Wall Bracket - Stainless Steel Finish	☐ QSWBSS
	Outdoor Unit Stand — 12” High	☐ QSMS1201M
Wind Baffle	Front Wind Baffle	☐ WB-PA4
	Rear Wind Baffle	☐ WB-RE4
	Side Advanced Wind Baffle	☐ WB-SD4

© 2022 Mitsubishi Electric Trane HVAC US LLC. All rights reserved.

INDOOR UNIT DIMENSIONS: TPKA0A0181LA00A

Unit: inch (mm)

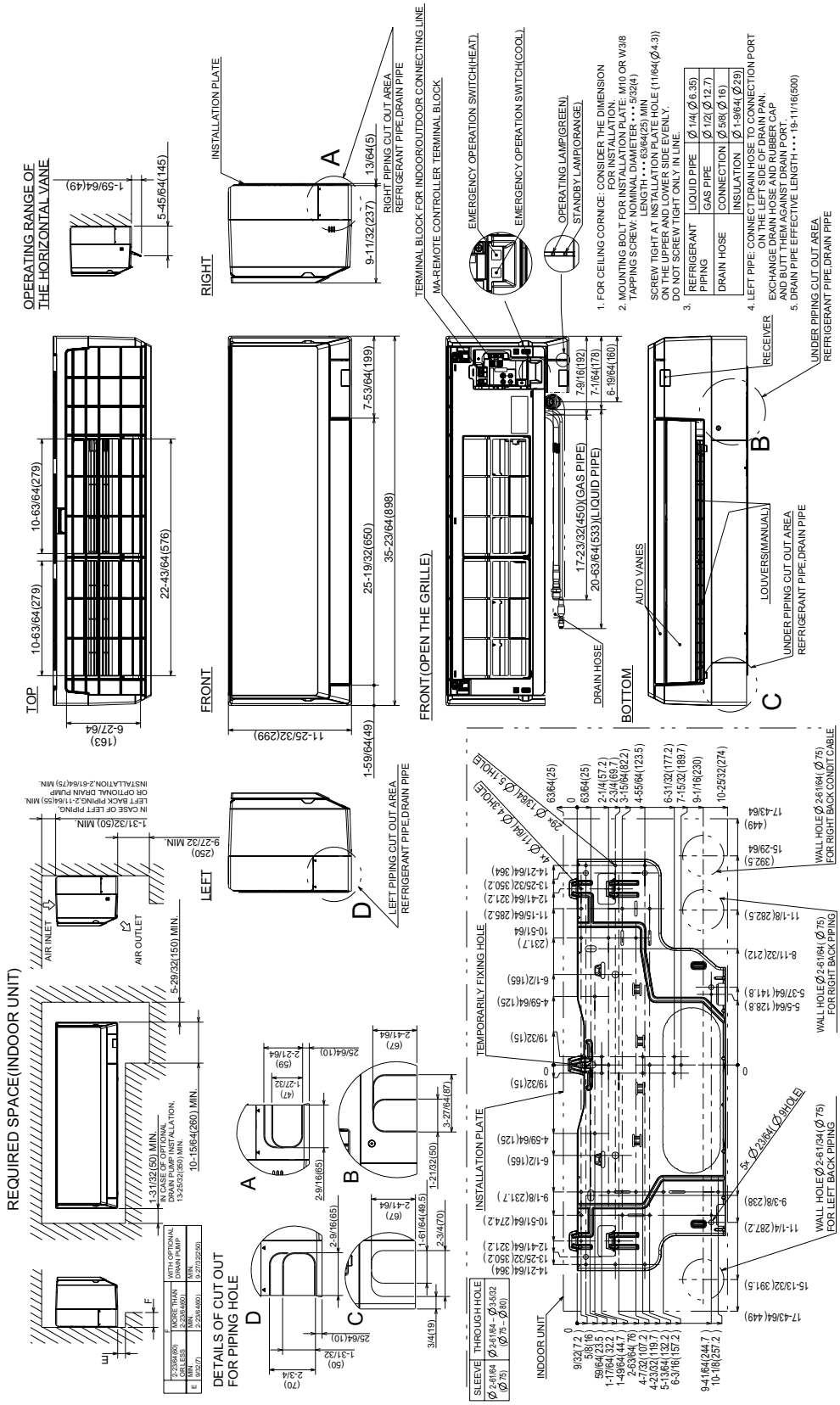

© 2022 Mitsubishi Electric Trane HVAC US LLC. All rights reserved.

OUTDOOR UNIT DIMENSIONS: TRUZA0181KA70BA

Unit: mm<in>

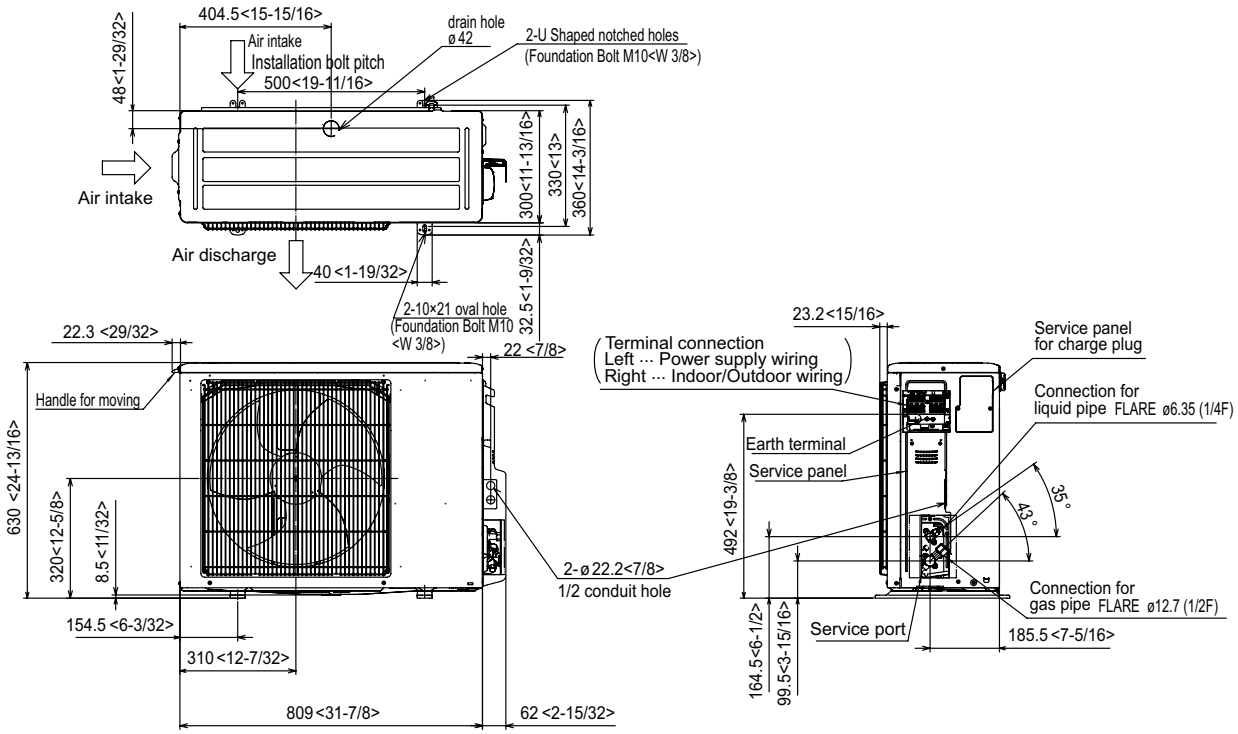

Free space around the outdoor unit (basic example)

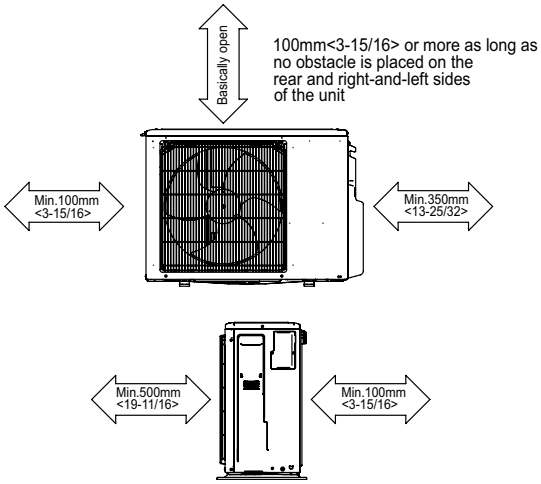

2 sides should be open in
the right, left and rear side.

FOUNDATION BOLTS

Please secure the unit firmly
with 4 foundation (M10<W3/8>) bolts.
(Bolts, washers and nut must
be purchased locally).

<Foundation bolt height>

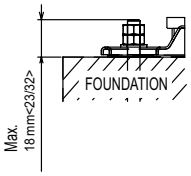

PIPING-WIRING DIRECTION

Piping and wiring connection can
be made from the rear direction only.

FORM# TPKA0A0181LA00A & TRUZA0181KA70BA - 202211

Specifications are subject to change without notice.

© 2022 Mitsubishi Electric Trane HVAC US LLC. All rights reserved.