# TPEADA0241AA70A & NTXSKS24A112AA
## MID STATIC HORIZONTAL-DUCTED INDOOR UNIT
## 24,000 BTU/H HEAT PUMP UNIVERSAL OUTDOOR UNIT

Job Name:

System Reference: Date:

Indoor Unit.....TPEADA0241AA70A

Outdoor Unit.....NTXSKS24A112AA

INDOOR UNIT FEATURES

- Unobtrusive ceiling-concealed design for short-run ductwork
- Wide ranging external static pressure (0.14-0.60 in. WG)
- Built-in condensate lift mechanism (up to 27-9/16”)
- Auto fan speed mode
- Optional FB Series filter boxes for easy access and service
- Ideal for residential homes, retail shopping centers, larger classrooms, office complexes, conference rooms, ballrooms, fitness centers, and more
- Multiple control options available:
  - kumo cloud® smart device app for remote access
  - Third-party interface options
  - Wired or wireless controllers

OUTDOOR UNIT FEATURES

- Variable speed INVERTER-driven compressor
- Innovative Joint Lap DC Motor leads to high efficiency and reliability
- Pulse Amplitude Modulation technology
- High-performance grooved piping for increased heat exchange efficiency

Specifications are subject to change without notice.

© 2021 Mitsubishi Electric Trane HVAC US LLC. All rights reserved.

# SPECIFICATIONS: TPEADA0241AA70A & NTXSKS24A112AA

| | | | |
|---|---|---|---|
| Cooling at 95°F[1] | Maximum Capacity | BTU/H | 24,000 |
| | Rated Capacity | BTU/H | 24,000 |
| | Minimum Capacity | BTU/H | 12,000 |
| | Maximum Power Input | W | 1,920 |
| | Rated Power Input | W | 1,920 |
| | Moisture Removal | Pints/h | 4.9 |
| | Sensible Heat Factor | | 0.77 |
| | Power Factor | % | 97.9/97.9 |
| Heating at 47°F[2] | Maximum Capacity | BTU/H | 28,000 |
| | Rated Capacity | BTU/H | 25,000 |
| | Minimum Capacity | BTU/H | 14,400 |
| | Maximum Power Input | W | 2,540 |
| | Rated Power Input | W | 1,990 |
| | Power Factor | % | 98.8/98.8 |
| Heating at 17°F[3] | Maximum Capacity | BTU/H | 15,000 |
| | Rated Capacity | BTU/H | 15,000 |
| | Maximum Power Input | W | 1,650 |
| | Rated Power Input | W | 1,650 |
| Efficiency | SEER | | 18.0 |
| | EER[1] | | 12.5 |
| | HSPF [IV] | | 11.2 |
| | COP at 47°F[2] | | 3.6 |
| | COP at 17°F at Maximum Capacity[3] | | 2.66 |
| | ENERGY STAR® Certified | | Yes |
| Electrical | Voltage, Phase, Frequency | | 208/230, 1, 60 |
| | Guaranteed Voltage Range | V AC | 187 - 253,198 - 253 |
| | Voltage: Indoor - Outdoor, S1-S2 | V AC | 208/230 |
| | Voltage: Indoor - Outdoor, S2-S3 | V DC | 24 |
| | Short-circuit Current Rating [SCCR] | kA | 5 |
| | Recommended Fuse/Breaker Size (Oudoor) | A | 20 |
| | Recommended Wire Size [Indoor - Outdoor] | AWG | 14 |
| | Power Supply | | Indoor unit is powered by the outdoor unit |
| Indoor Unit | MCA | A | 2.63 |
| | Fan Motor Full Load Amperage | A | 2.1 |
| | Fan Motor Output | W | 121 |
| | Fan Motor Type | | DC Motor |
| | Airflow Rate at Cooling, Dry | CFM | 512–635–741 |
| | Airflow Rate at Cooling, Wet | CFM | 461–572–667 |
| | Airflow Rate at Heating, Dry | CFM | 512–635–741 |
| | Sound Pressure Level [Cooling] | dB[A] | 30–33–37 |
| | Sound Pressure Level [Heating] | dB[A] | 30–33–37 |
| | External Static Pressure | in.WG | 0.14–0.2–0.28–0.4–0.6 |
| | Drain Pipe Size | In. [mm] | 1-1/4 [32] |
| | Condensate Lift Mechanism, Maximum Distance | In. [mm] | 27-9/16 [700] |
| | Coating on Heat Exchanger | | — |
| | External Finish Color | | Galvanized |
| | Unit Dimensions | W x D x H: In. [mm] | 43-5/16 x 28-7/8 x 9-7/8 [1100 x 732 x 250] |
| | Package Dimensions | W x D x H: In. [mm] | 53-3/16 x 34-11/16 x 13-7/16 [1350 x 880 x 341] |
| | Unit Weight | Lbs. [kg] | 69 [31] |
| | Package Weight | Lbs. [kg] | 82 [37] |
| Indoor Unit Operating Temperature Range | Cooling Intake Air Temp [Maximum / Minimum]* | °F | 90 DB, 72 WB / 66 DB, 61 WB |
| | Heating Intake Air Temp [Maximum / Minimum] | °F | 77 DB / 59 DB |

NOTES:

| | | | |
|---|---|---|---|
| AHRI Rated Conditions (Rated data is determined at a fixed compressor speed) | [1]Cooling (Indoor // Outdoor) | °F | 80 DB, 67 WB // 95 DB, 75 WB |
| | [2]Heating at 47°F (Indoor // Outdoor) | °F | 70 DB, 60 WB // 47 DB, 43 WB |
| | [3]Heating at 17°F (Indoor // Outdoor) | °F | 70 DB, 60 WB // 17 DB, 15 WB |
| Conditions | [4]Heating at 5°F (Indoor // Outdoor) | °F | 70 DB, 60 WB // 5 DB, 4 WB |
| | [5]Heating at -4°F (Indoor // Outdoor) | °F | 70 DB, 60 WB // -4 DB, -5 WB |
| | [6]Heating at -5°F (Indoor // Outdoor) | °F | 70 DB, 60 WB // -5 DB, -6 WB |
| | [7]Heating at -13°F (Indoor // Outdoor) | °F | 70 DB, 60 WB // -13 DB, -14 WB |

*Outdoor Unit Operating Temperature Range (Cooling Air Temp (Maximum / Minimum)):
- Applications should be restricted to comfort cooling only; equipment cooling applications are not recommended for low ambient temperature conditions.

**Outdoor Unit Operating Temperature Range (Cooling Thermal Lock-out / Re-start Temperatures; Heating Thermal Lock-out / Re-start Temperatures):
- System cuts out in heating mode to avoid thermistor error and automatically restarts at these temperatures.


© 2021 Mitsubishi Electric Trane HVAC US LLC. All rights reserved.

# SPECIFICATIONS: TPEADA0241AA70A & NTXSKS24A112AA

| | | | |
|---|---|---|---|
| Outdoor Unit | MCA | A | 17.0 |
| | MOCP | A | 31 |
| | Fan Motor Full Load Amperage | A | 1 |
| | Fan Motor Output | W | 60 |
| | Airflow Rate | CFM | 2020/1930 |
| | Refrigerant Control | | LEV |
| | Defrost Method | | Reverse Cycle |
| | Coating on Heat Exchanger | | Blue Fin Coating |
| | Sound Pressure Level, Cooling[1] | dB(A) | 55 |
| | Sound Pressure Level, Heating[2] | dB(A) | 55 |
| | Compressor Type | | DC INVERTER-driven |
| | Compressor Model | | SNB220FQGM1T |
| | Compressor Rated Load Amps | A | 13.0 |
| | Compressor Locked Rotor Amps | A | 16.0 |
| | Compressor Oil Type // Charge | oz. | FV50S // 15.6 |
| | External Finish Color | | Ivory Munsell 3Y 7.8/1.1 |
| | Base Pan Heater | | Optional |
| | Unit Dimensions | W x D x H: In. [mm] | 33-1/16 x 13 x 34-5/8 [840 x 330 x 880] |
| | Package Dimensions | W x D x H: In. [mm] | 38-9/16 x 16-9/16 x 39 [980 x 420 x 990] |
| | Unit Weight | Lbs. [kg] | 129 [59] |
| | Package Weight | Lbs. [kg] | 145 [66] |
| Outdoor Unit Operating Temperature Range | Cooling Air Temp [Maximum / Minimum]* | °F | 115 DB / 14 DB |
| | Cooling Thermal Lock-out / Re-start Temperatures** | °F | 1 / 5 |
| | Heating Thermal Lock-out / Re-start Temperatures** | °F | 10 / 14 |
| Refrigerant | Type | | R410A |
| | Charge | Lbs, oz | 4, 14.0 |
| | Chargeless Piping Length | Ft. [m] | 25.0 [7.5] |
| | Additional Refrigerant Charge Per Additional Piping Length | oz./Ft. [g/m] | 0.538 [50] |
| Piping | Gas Pipe Size O.D. [Flared] | In.[mm] | 5/8 [15.88] |
| | Liquid Pipe Size O.D. [Flared] | In.[mm] | 3/8 [9.52] |
| | Maximum Piping Length | Ft. [m] | 100 [30] |
| | Maximum Height Difference | Ft. [m] | 100 [30] |
| | Maximum Number of Bends | | 10 |

NOTES:

| | | | |
|---|---|---|---|
| AHRI Rated Conditions (Rated data is determined at a fixed compressor speed) | [1]Cooling (Indoor // Outdoor) | °F | 80 DB, 67 WB // 95 DB, 75 WB |
| | [2]Heating at 47°F (Indoor // Outdoor) | °F | 70 DB, 60 WB // 47 DB, 43 WB |
| | [3]Heating at 17°F (Indoor // Outdoor) | °F | 70 DB, 60 WB // 17 DB, 15 WB |
| Conditions | [4]Heating at 5°F (Indoor // Outdoor) | °F | 70 DB, 60 WB // 5 DB, 4 WB |
| | [5]Heating at -4°F (Indoor // Outdoor) | °F | 70 DB, 60 WB // -4 DB, -5 WB |
| | [6]Heating at -5°F (Indoor // Outdoor) | °F | 70 DB, 60 WB // -5 DB, -6 WB |
| | [7]Heating at -13°F (Indoor // Outdoor) | °F | 70 DB, 60 WB // -13 DB, -14 WB |

*Outdoor Unit Operating Temperature Range (Cooling Air Temp (Maximum / Minimum)):
- Applications should be restricted to comfort cooling only; equipment cooling applications are not recommended for low ambient temperature conditions.

**Outdoor Unit Operating Temperature Range (Cooling Thermal Lock-out / Re-start Temperatures; Heating Thermal Lock-out / Re-start Temperatures):
- System cuts out in heating mode to avoid thermistor error and automatically restarts at these temperatures.

Specifications are subject to change without notice.

© 2021 Mitsubishi Electric Trane HVAC US LLC. All rights reserved.

# INDOOR UNIT ACCESSORIES: TPEADA0241AA70A

| | | |
|---|---|---|
| Control Interface | 3-Pin Connector | ☐ PAC-715AD |
| | BACnet® and Modbus Interface | ☐ PAC-UKPRC001-CN-1 |
| | CN24 Relay Kit | ☐ CN24RELAY-KIT-CM3 |
| | Connector cable for remote display | ☐ PAC-SA88HA-EP |
| | IT Extender | ☐ PAC-WHS01IE-E |
| | kumo station® for kumo cloud® | ☐ TAC-WHS01HC-E |
| | Lockdown bracket for remote controller | ☐ RCMKP1CB |
| | Remote Operation Adapter‡ | ☐ PAC-SF40RM-E |
| | Thermostat Interface | ☐ PAC-US444CN-1 |
| | USNAP Adapter | ☐ PAC-WHS01UP-E |
| | Wireless Interface for kumo cloud® | ☐ PAC-USWHS002-WF-2 |
| Remote Sensor | Flush Mount Temperature Sensor | ☐ PAC-USSEN001-FM-1 |
| | Remote Temperature Sensor | ☐ PAC-SE41TS-E |
| | Wireless temperature and humitity sensor for kumo cloud® | ☐ PAC-USWHS003-TH-1 |
| Wired Remote Controller | Airzone ZBS Wired Blueface Principal Controller White | ☐ AZZBSBLUEFACECB |
| | Airzone ZBS Wired Lite Controller White | ☐ AZZBSLITECB |
| | Airzone ZBS Wired Think Controller White | ☐ AZZBSTHINKCB |
| | Airzone ZBS Wireless Lite Controller White | ☐ AZZBSLITERB |
| | Airzone ZBS Wireless Think Controller White | ☐ AZZBSTHINKRB |
| | Deluxe Wired MA Remote Controller† | ☐ TAR-40MAAU |
| | Simple MA Remote Controller† | ☐ TAC-YT53CRAU-J |
| | Touch MA Controller† | ☐ TAR-CT01MAU-SB |
| Wireless Remote Controller | kumo touch™ RedLINK™ Wireless Controller | ☐ MHK2 |
| | Wireless MA Receiver | ☐ PAR-SR32MA-E |
| Condensate | Blue Diamond (Advanced) Mini Condensate Pump w/ Reservoir & Sensor (208/230V) [recommended] | ☐ X87-721 |
| | Blue Diamond (MegaBlue Advanced) Condensate Pump w/ Reservoir & Sensor | ☐ X87-835 |
| | Blue Diamond Sensor Extension Cable — 15 Ft. | ☐ C13-103 |
| Control Wire | 20/2PR, 1PR shielded + 1PR plenum wire for Airzone, 100 ft reel | ☐ CW2042S2-100 |
| | 20/2PR, shielded + 1PR plenum wire for Airzone, 500 ft reel | ☐ CW2042S2-500 |
| Disconnect Switch | (30A/600V/UL) [fits 2” X 4” utility box] - Black | ☐ TAZ-MS303 |
| | (30A/600V/UL) [fits 2” X 4” utility box] - White | ☐ TAZ-MS303W |
| Filter Box | Filter Box with MERV 13 Filter | ☐ FBM2-3-A |
| Lineset | 10’ x 3/8” x 10’ x 5/8” Lineset (Twin-Tube Insulation) | ☐ MPLS385812T-10 |
| | 100’ x 3/8” x 100’ x 5/8” Lineset (Twin-Tube Insulation) | ☐ MPLS385812T-100 |
| | 15’ x 3/8” x 15’ x 5/8” Lineset (Twin-Tube Insulation) | ☐ MPLS385812T-15 |
| | 30’ x 3/8” x 30’ x 5/8” Lineset (Twin-Tube Insulation) | ☐ MPLS385812T-30 |
| | 50’ x 3/8” x 50’ x 5/8” Lineset (Twin-Tube Insulation) | ☐ MPLS385812T-50 |
| | 65’ x 3/8” x 65’ x 5/8” Lineset (Twin-Tube Insulation) | ☐ MPLS385812T-65 |

NOTES:
‡PAC-SF40RM-E (Unable to use with wireless remote controller)


© 2021 Mitsubishi Electric Trane HVAC US LLC. All rights reserved.

# OUTDOOR UNIT ACCESSORIES: NTXSKS24A112AA

| | | |
|---|---|---|
| Air Outlet Guide | Air Outlet Guide | ☐ PAC-ADG886AA-E |
| Control/Service Tool | M- & P-Series Maintenance Tool Cable Set | ☐ M21EC0397 |
| | USB/UART Conversion Cable (Required for all laptop connection) | ☐ M21EC1397 |
| Mini-Split Wire | 14 Gauge, 4 wire MiniSplit Cable—250 ft. roll | ☐ S144-250 |
| | 14 Gauge, 4 wire MiniSplit Cable—250 ft. roll | ☐ SW144-250 |
| | 14 Gauge, 4 wire MiniSplit Cable—50 ft. roll | ☐ S144-50 |
| | 14 Gauge, 4 wire MiniSplit Cable—50 ft. roll | ☐ SW144-50 |
| | 16 Gauge, 4 wire MiniSplit Cable—250 ft. roll | ☐ S164-250 |
| | 16 Gauge, 4 wire MiniSplit Cable—250 ft. roll | ☐ SW164-250 |
| | 16 Gauge, 4 wire MiniSplit Cable—50 ft. roll | ☐ S164-50 |
| | 16 Gauge, 4 wire MiniSplit Cable—50 ft. roll | ☐ SW164-50 |
| Mounting Pad | Condensing Unit Mounting Pad: 16” x 36” x 3” | ☐ ULTRILITE1 |
| | Outdoor Unit 3-1/4 inch Mounting Base (Pair) - Plastic | ☐ DSD-400P |
| Optional Defrost Heater | Base Heater | ☐ MAC-642BH-U1 |
| Stand | 18” Single Fan Stand | ☐ QSMS1801M |
| | 24” Single Fan Stand | ☐ QSMS2401M |
| | Condenser Wall Bracket | ☐ QSWB2000M-1 |
| | Outdoor Unit Stand — 12” High | ☐ QSMS1201M |


© 2021 Mitsubishi Electric Trane HVAC US LLC. All rights reserved.

# INDOOR UNIT DIMENSIONS: TPEADA0241AA70A

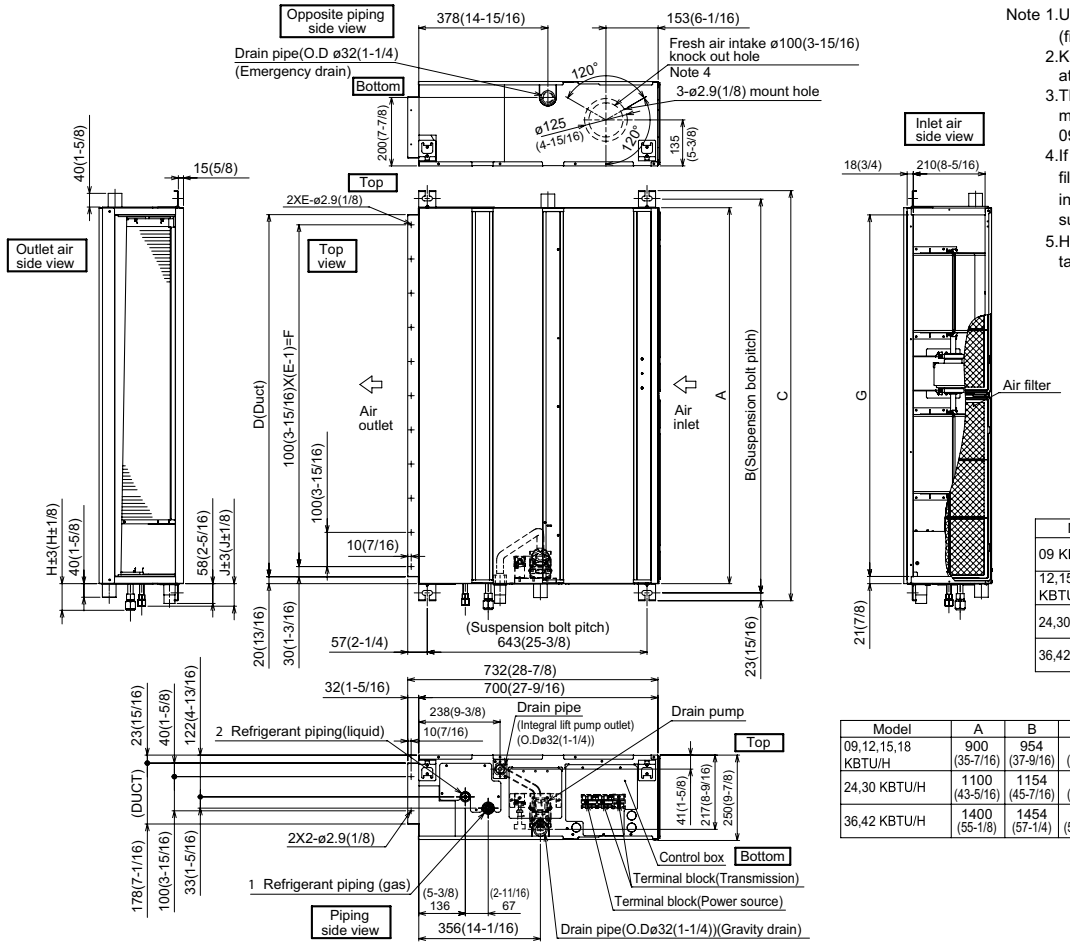


Note 1.Use an M10 screw for the suspension bolt (field supply).
2.Keep the service space for maintenance at the bottom.
3.This drawing is for 24·30·36·42 KBTU/H models,which have 2 fans.
09·12·15·18 KBTU/H models have 1 fan.
4.If the inlet duct is used,remove the air filter (supplied with the unit), then install the filter (field supply) at the suction side.
5.Heat air to 0°C (32°F) or higher when taking fresh air with a fresh air intake.

Unit:mm(in.)

| Model | J | 1 Gas pipe | 2 Liquid pipe |
|---|---|---|---|
| 09 KBTU/H | 62 (2-1/2) | ø9.52 (3/8) | ø6.35 (1/4) |
| 12,15,18 KBTU/H | 62 (2-1/2) | ø12.7 (1/2) | ø6.35 (1/4) |
| 24,30 KBTU/H | 66 (2-5/8) | ø15.88 (5/8) | ø9.52 (3/8) |
| 36,42 KBTU/H | | | |

Unit:mm(in.)

| Model | A | B | C | D | E | F | G | H |
|---|---|---|---|---|---|---|---|---|
| 09,12,15,18 KBTU/H | 900 (35-7/16) | 954 (37-9/16) | 1000 (39-3/8) | 860 (33-7/8) | 9 | 800 (31-1/2) | 858 (33-13/16) | 72 (2-7/8) |
| 24,30 KBTU/H | 1100 (43-5/16) | 1154 (45-7/16) | 1200 (47-1/4) | 1060 (41-3/4) | 11 | 1000 (39-3/8) | 1058 (41-11/16) | 78 (3-1/8) |
| 36,42 KBTU/H | 1400 (55-1/8) | 1454 (57-1/4) | 1500 (59-1/16) | 1360 (53-9/16) | 14 | 1300 (51-3/16) | 1358 (53-1/2) | |


© 2021 Mitsubishi Electric Trane HVAC US LLC. All rights reserved.

# OUTDOOR UNIT DIMENSIONS: NTXSKS24A112AA

**Unit: inch(mm)**

## REQUIRED SPACE

*1 4 in. (100 mm) or more when front and sides of the unit are clear

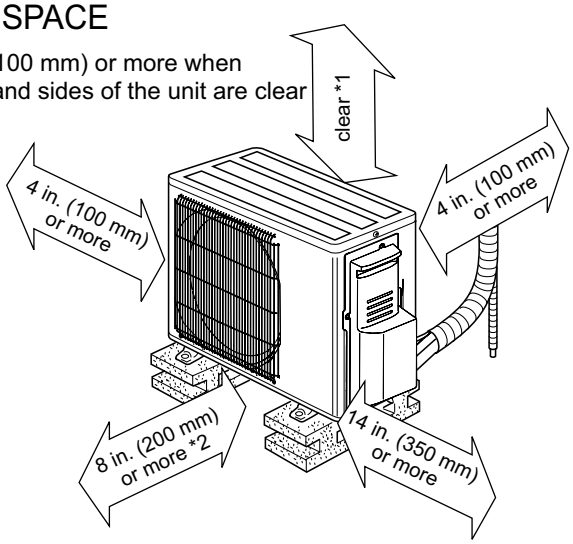


*2 When any 2 sides of left, right and rear of the unit are clear

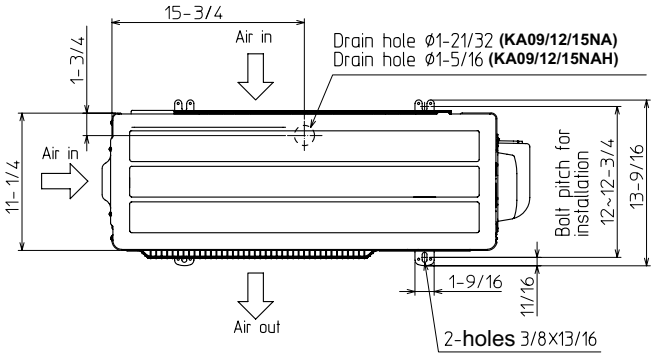


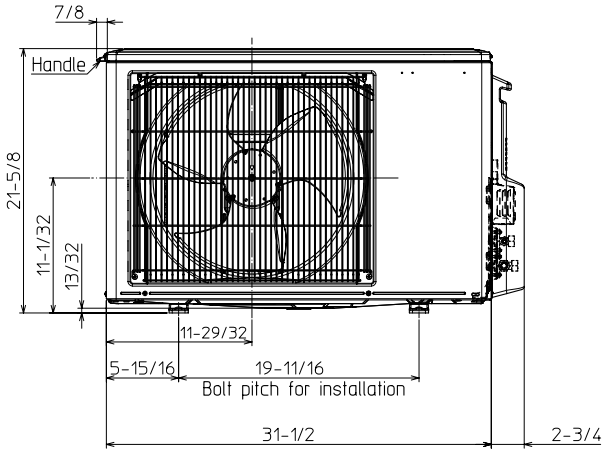


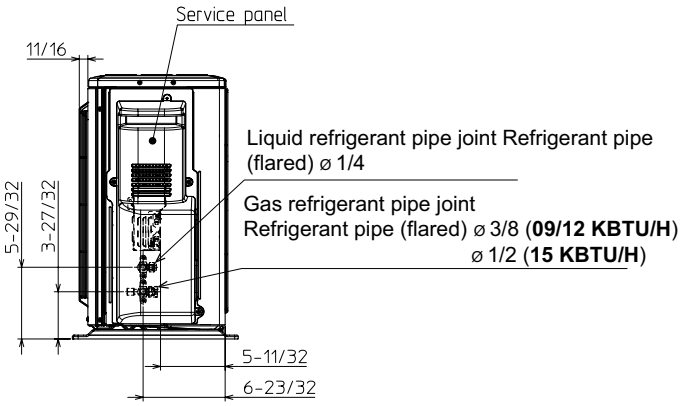


FORM# TPEADA0241AA70A & NTXSKS24A112AA - 202106

Specifications are subject to change without notice.

© 2021 Mitsubishi Electric Trane HVAC US LLC. All rights reserved.