NTXWPH06B112AA & NTXSPH06B112AA
6,000 BTU/H DELUXE WALL-MOUNTED INDOOR UNIT
6,000 BTU/H HYPER-HEATING OUTDOOR UNIT

Job Name:

System Reference: Date:

Indoor Unit NTXWPH06B112AA

Outdoor Unit NTXSPH06B112AA

INDOOR UNIT FEATURES

- Slim wall-mounted indoor units provide zone comfort control
- Dual Barrier Coating applied to the heat exchanger, vanes and fan to prevent hydrophilic and hydrophobic dirt build-up
- Multiple fan speed options: Quiet, Low, Medium, High, Super-high, Auto
- 3D i-see Sensor® enables advance features:
  - Indirect or Direct Airflow for personalized comfort
  - Absence Detection for energy-saving mode
- Double Vane features:
  - Separates airflow to deliver air across a large area
  - Simultaneously deliver to air separate sections of a room
  - Generates more comfortable natural airflow pattern
- Multiple control options available:
  - Back-lit screen handheld remote controller (provided with unit)
  - kumo cloud® smart device app for remote access
  - Third-party interface options
  - Wired or wireless controllers
- Triple-action Filtration: Nano Platinum Filter, Deodorizing Filter, & Electrostatic Anti-Allergy Enzyme Filter
- Hot-Start Technology: no cold air rush at equipment startup or when restarting after Defrost Cycle
- Quiet operation

OUTDOOR UNIT FEATURES

- INVERTER-driven compressor and LEV provide high efficiency and comfort while using only the energy needed to maintain maximum performance
- Hyper-heating plus offers 100% heating capacity at -5° and 70% to 81% heating capacity at -13° F
- Blue Fin anti-corrosion treatment applied to the outdoor unit heat exchanger for increased coil protection and longer life
- Built-in base pan heater

Specifications are subject to change without notice.

© 2023 Mitsubishi Electric Trane HVAC US LLC. All rights reserved.

SPECIFICATIONS: NTXWPH06B112AA & NTXSPH06B112AA

Cooling at 95°F[1]	Maximum Capacity	BTU/H	9,000
	Rated Capacity	BTU/H	6,000
	Minimum Capacity	BTU/H	1,700
	Maximum Power Input	W	560
	Rated Power Input	W	315
	Moisture Removal	Pints/h	0.2
	Sensible Heat Factor		0.96
	Power Factor [208V / 230V]	%	79.0 / 80.0
Heating at 47°F[2]	Maximum Capacity	BTU/H	14,000
	Rated Capacity	BTU/H	8,700
	Minimum Capacity	BTU/H	1,600
	Maximum Power Input	W	1,270
	Rated Power Input	W	545
	Power Factor [208V / 230V]	%	90.0 / 91.0
Heating at 17°F[3]	Maximum Capacity	BTU/H	12,840
	Rated Capacity	BTU/H	5,900
	Maximum Power Input	W	1,400
	Rated Power Input	W	390
Heating at 5°F[4]	Maximum Capacity	BTU/H	10,500
	Maximum Power Input	W	1,250
Heating at -5°F[6]	Maximum Capacity	BTU/H	8,700
Heating at -13°F[7]	Maximum Capacity	BTU/H	7,250
Efficiency	SEER2		32.2
	EER2[1]		19.0
	HSPF2 [IV]		11.9
	COP at 47°F[2]		4.68
	COP at 17°F at Maximum Capacity[3]		2.69
	COP at 5°F at Maximum Capacity[4]		2.46
	COP at -5°F at Maximum Capacity[6]		2.25
	COP at -13°F at Maximum Capacity[7]		1.93
	ENERGY STAR® Certified		Yes
Electrical	Voltage, Phase, Frequency		208/230, 1, 60
	Guaranteed Voltage Range	V AC	187 - 253
	Voltage: Indoor - Outdoor, S1-S2	V AC	208/230
	Voltage: Indoor - Outdoor, S2-S3	V DC	24
	Short-circuit Current Rating [SCCR]	kA	5
	Recommended Fuse/Breaker Size (Oudoor)	A	15
	Recommended Wire Size [Indoor - Outdoor]	AWG	14
	Power Supply		Indoor unit is powered by the outdoor unit
Indoor Unit	MCA	A	1.0
	Fan Motor Full Load Amperage	A	0.65
	Fan Motor Type		DC Motor
	Airflow Rate at Cooling, Dry	CFM	137–167–221–304–381
	Airflow Rate at Cooling, Wet	CFM	117–143–190–261–328
	Airflow Rate at Heating, Dry	CFM	140–167–225–325–437
	Sound Pressure Level [Cooling]	dB[A]	20–23–29–36–40
	Sound Pressure Level [Heating]	dB[A]	20–24–29–39–42
	Drain Pipe Size	In. [mm]	5/8 [15.88]
	Coating on Heat Exchanger		Dual Barrier Coating
	External Finish Color		Munsell 1.0Y 9.2/0.2
	Unit Dimensions	W x D x H: In. [mm]	36-7/16 x 9-3/16 x 12 (+11/16) [925 x 234 x 305 (+17)]
	Package Dimensions	W x D x H: In. [mm]	39 x 12-1/4 x 15-1/2 [990 x 310 x 400]
	Unit Weight	Lbs. [kg]	29 [13.5]
	Package Weight	Lbs. [kg]	34 [15.4]
Indoor Unit Operating Temperature Range	Cooling Intake Air Temp [Maximum / Minimum]*	°F	90 DB, 73 WB / 67 DB, 57 WB
	Heating Intake Air Temp [Maximum / Minimum]	°F	80 DB / 70 DB

NOTES:

AHRI Rated Conditions (Rated data is determined at a fixed compressor speed)	[1]Cooling (Indoor // Outdoor)	°F	80 DB, 67 WB // 95 DB, 75 WB
	[2]Heating at 47°F (Indoor // Outdoor)	°F	70 DB, 60 WB // 47 DB, 43 WB
	[3]Heating at 17°F (Indoor // Outdoor)	°F	70 DB, 60 WB // 17 DB, 15 WB
Conditions	[4]Heating at 5°F (Indoor // Outdoor)	°F	70 DB, 60 WB // 5 DB, 4 WB
	[6]Heating at -5°F (Indoor // Outdoor)	°F	70 DB, 60 WB // -5 DB, -6 WB
	[7]Heating at -13°F (Indoor // Outdoor)	°F	70 DB, 60 WB // -13 DB, -14 WB

*Indoor/Outdoor Unit Operating Temperature Range (Cooling Air Temp [Maximum / Minimum]):
- Applications should be restricted to comfort cooling only; equipment cooling applications are not recommended for low ambient temperature conditions.

**Outdoor Unit Operating Temperature Range (Cooling Thermal Lock-out / Re-start Temperatures; Heating Thermal Lock-out / Re-start Temperatures):
- System cuts out in heating mode to avoid thermistor error and automatically restarts at these temperatures.

Specifications are subject to change without notice.

© 2023 Mitsubishi Electric Trane HVAC US LLC. All rights reserved.

SPECIFICATIONS: NTXWPH06B112AA & NTXSPH06B112AA

Outdoor Unit	MCA	A	10.0
	MOCP	A	15
	Fan Motor Full Load Amperage	A	0.5
	Fan Motor Output	W	55
	Airflow Rate [Cooling / Heating]	CFM	1141 / 1183
	Refrigerant Control		LEV
	Defrost Method		Reverse Cycle
	Coating on Heat Exchanger		Blue Fin Coating
	Sound Pressure Level, Cooling[1]	dB(A)	47
	Sound Pressure Level, Heating[2]	dB(A)	49
	Compressor Type		Twin Rotary
	Compressor Model		SNB092FQAMT
	Compressor Rated Load Amps	A	9.2
	Compressor Locked Rotor Amps	A	7.4
	Compressor Oil [Type // Charge]	oz.	FV50S // 0.35
	External Finish Color		Munsell 3Y 7.8/1.1
	Base Pan Heater		Optional
	Unit Dimensions	W x D x H: In. [mm]	31-1/2 x 11-1/4 x 21-5/8 [800 x 285 x 550]
	Package Dimensions	W x D x H: In. [mm]	37 x 15 x 24-1/2 [940 x 380 x 630]
	Unit Weight	Lbs. [kg]	82 [37]
	Package Weight	Lbs. [kg]	89 [40]
Outdoor Unit Operating Temperature Range	Cooling Air Temp [Maximum / Minimum]*	°F	115 DB / 14 DB
	Cooling Thermal Lock-out / Re-start Temperatures**	°F	-4 / 0
	Heating Air Temp [Maximum / Minimum]	°F	75 DB, 65 WB / -13 DB, -14 WB
	Heating Thermal Lock-out / Re-start Temperatures**	°F	-18 / -14
Refrigerant	Type		R410A
	Pre-Charged Refrigerant Amount	Lbs, oz	2.0, 9.0
	Maximum Pre-Charged Piping Length	Ft. [m]	25.0 [7.5]
	Additional Refrigerant Charge Per Additional Piping Length	oz./Ft. [g/m]	0.216 [20]
Piping	Gas Pipe Size O.D. [Flared]	In.[mm]	3/8 [9.52]
	Liquid Pipe Size O.D. [Flared]	In.[mm]	1/4 [6.35]
	Maximum Piping Length	Ft. [m]	65 [20]
	Maximum Height Difference	Ft. [m]	40 [12]
	Maximum Number of Bends		10

NOTES:

AHRI Rated Conditions (Rated data is determined at a fixed compressor speed)	[1]Cooling (Indoor // Outdoor)	°F	80 DB, 67 WB // 95 DB, 75 WB
	[2]Heating at 47°F (Indoor // Outdoor)	°F	70 DB, 60 WB // 47 DB, 43 WB
	[3]Heating at 17°F (Indoor // Outdoor)	°F	70 DB, 60 WB // 17 DB, 15 WB
Conditions	[4]Heating at 5°F (Indoor // Outdoor)	°F	70 DB, 60 WB // 5 DB, 4 WB
	[6]Heating at -5°F (Indoor // Outdoor)	°F	70 DB, 60 WB // -5 DB, -6 WB
	[7]Heating at -13°F (Indoor // Outdoor)	°F	70 DB, 60 WB // -13 DB, -14 WB

*Indoor/Outdoor Unit Operating Temperature Range (Cooling Air Temp [Maximum / Minimum]):
- Applications should be restricted to comfort cooling only; equipment cooling applications are not recommended for low ambient temperature conditions.

**Outdoor Unit Operating Temperature Range (Cooling Thermal Lock-out / Re-start Temperatures; Heating Thermal Lock-out / Re-start Temperatures):
- System cuts out in heating mode to avoid thermistor error and automatically restarts at these temperatures.

Specifications are subject to change without notice.

© 2023 Mitsubishi Electric Trane HVAC US LLC. All rights reserved.

INDOOR UNIT ACCESSORIES: NTXWPH06B112AA

Control Interface	CN24 Relay Kit	☐ CN24RELAY-KIT-CM3
	IT Extender	☐ PAC-WHS01IE-E
	kumo station® for kumo cloud®	☐ TAC-WHS01HC-E
	Procon BACnet® and Modbus® Interface	☐ PAC-UKPRC001-CN-1
	System Control Interface	☐ MAC-334IF-E
	Thermostat Interface	☐ PAC-US444CN-1
	Thermostat Interface	☐ PAC-US445CN-1
	USNAP Adapter	☐ PAC-WHS01UP-E
	Wireless Interface for kumo cloud®	☐ PAC-USWHS002-WF-2
Remote Sensor	Wired Remote Sensor	☐ M21EAA307
	Wireless temperature and humidity sensor for kumo cloud®	☐ PAC-USWHS003-TH-1
Wired Remote Controller	Deluxe Wired MA Remote Controller†	☐ TAR-40MAAU
	Simple Ductless Wired Remote Controller	☐ PAC-SDW01RC-1
	Simple MA Remote Controller†	☐ TAC-YT53CRAU-J
	Touch MA Controller†	☐ TAR-CT01MAU-SB
Wireless Remote Controller	kumo touch™ RedLINK™ Wireless Controller	☐ MHK2
	Lockdown bracket for remote controller	☐ RCMKP1CB
Condensate	Blue Diamond (Advanced) Mini Condensate Pump w/ Reservoir & Sensor (208/230V) [recommended]	☐ X87-721
	Blue Diamond (MicroBlue) Mini Condensate Pump (110/208/230V) up to 18,000 BTU/H	☐ X86-003
	Blue Diamond Alarm Extension Cable—6.5 Ft.	☐ C13-192
	Blue Diamond MultiTank — collection tank for use with multiple pumps	☐ C21-014
	Blue Diamond Sensor Extension Cable — 15 Ft.	☐ C13-103
	Drain Pan Level Sensor/Control	☐ SS610E
	Fascia Kit for MicroBlue Pump, mounts the MicroBlue and sensor directly beneath indoor unit	☐ T18-016
	Refco Condensate Pump (100-240 VAC)	☐ GOBI-II
	Refco Condensate Pump (100-240 VAC) up to 120,000 BTU/H	☐ COMBI
	Sauermann Condensate Pump	☐ SI30-230
Disconnect Switch	(30A/600V/UL) [fits 2” X 4” utility box] - Black	☐ TAZ-MS303
	(30A/600V/UL) [fits 2” X 4” utility box] - White	☐ TAZ-MS303W
Filter	Electro Static Anti-allergy Enzyme Filter	☐ MAC-2330FT-E
	Platinum Deodorizing Filter	☐ MAC-3000FT-E
Lineset	15’ x 1/4” x 15’ / 3/8” Lineset (Twin-Tube Insulation)	☐ MLS143812T-15
	30’ x 1/4” x 30’ / 3/8” Lineset (Twin-Tube Insulation)	☐ MLS143812T-30
	50’ x 1/4” x 50’ / 3/8” Lineset (Twin-Tube Insulation)	☐ MLS143812T-50
	65’ x 1/4” x 65’ / 3/8” Lineset (Twin-Tube Insulation)	☐ MLS143812T-65

NOTES:
†Requires MAC-334IF-E
- Nv-Series EZ FIT® Recessed Ceiling Cassette, Floor-mount and Wall-mount
  Allows indoor units to connect to an MA Controller:
  Deluxe MA Remote Controller
  Simple MA Controller
  Touch MA Controller

© 2023 Mitsubishi Electric Trane HVAC US LLC. All rights reserved.

OUTDOOR UNIT ACCESSORIES: NTXSPH06B112AA

Control/Service Tool	M- & P-Series Maintenance Tool Cable Set	☐ M21EC0397
	USB/UART Conversion Cable (Required for all laptop connection)	☐ M21EC1397
Drain Socket	Drain Socket	☐ MAC-871DS
Hail Guards	Hail Guard	☐ HG-B4
Mini-Split Wire	14 Gauge, 4 wire MiniSplit Cable—250 ft. roll	☐ S144-250
	14 Gauge, 4 wire MiniSplit Cable—50 ft. roll	☐ S144-50
	16 Gauge, 4 wire MiniSplit Cable—250 ft. roll	☐ S164-250
	16 Gauge, 4 wire MiniSplit Cable—50 ft. roll	☐ S164-50
Mounting Pad	Condensing Unit Mounting Pad: 16” x 36” x 3”	☐ ULTRILITE1
	Outdoor Unit 3-1/4 inch Mounting Base (Pair) - Plastic	☐ DSD-400P
Optional Defrost Heater	Optional Defrost Heater	☐ MAC-640BH-U
Stand	18” Single Fan Stand	☐ QSMS1801M
	24” Single Fan Stand	☐ QSMS2401M
	Condenser Wall Bracket	☐ QSWB2000M-1
	Condenser Wall Bracket - Stainless Steel Finish	☐ QSWBSS
	Outdoor Unit Stand — 12” High	☐ QSMS1201M

© 2023 Mitsubishi Electric Trane HVAC US LLC. All rights reserved.

INDOOR UNIT DIMENSIONS: NTXWPH06B112AA

Unit: inch

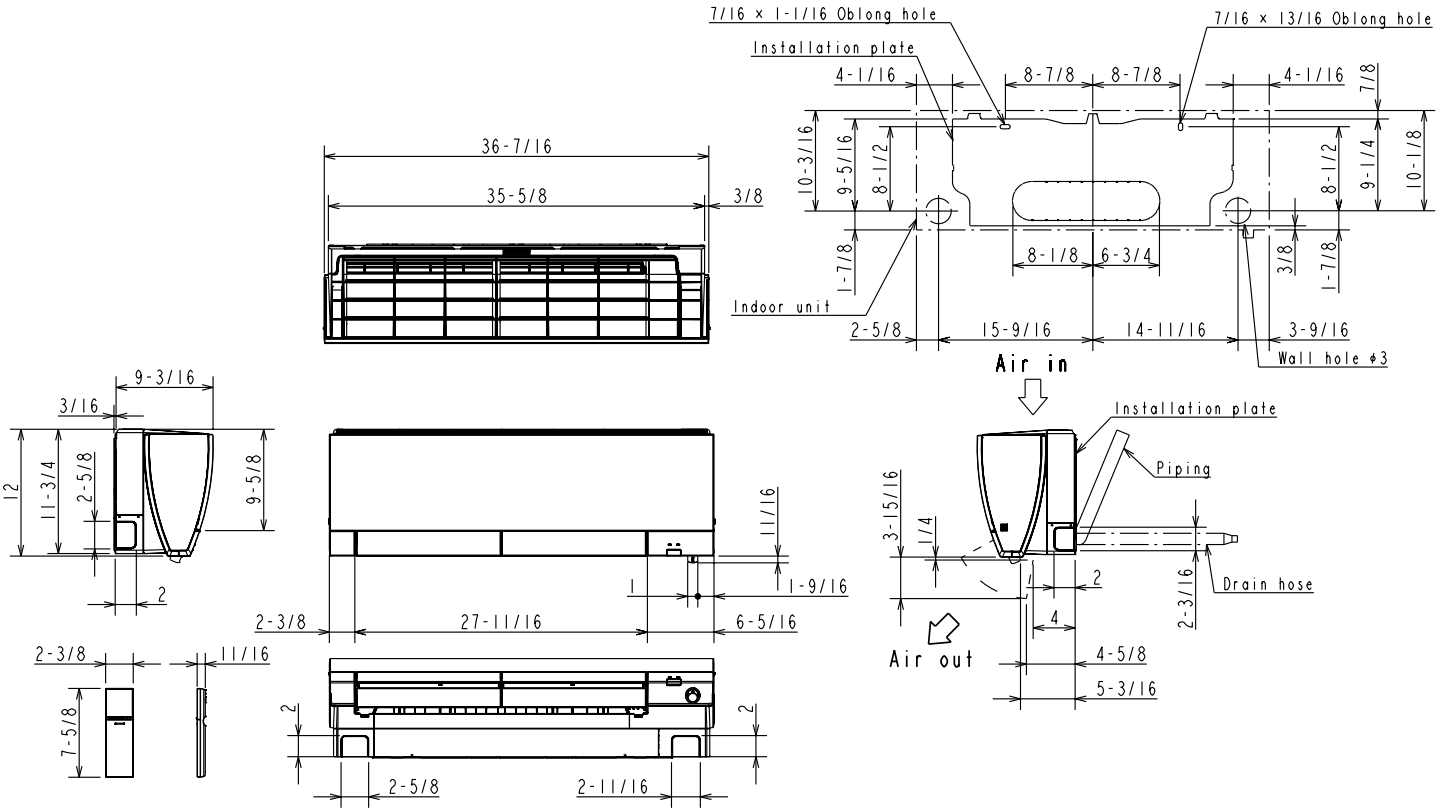

(06/09/12 KBTU/H)

Piping	Insulation	ϕ1-7/16 O.D
	Liquid line	ϕ1/4 19-11/16 (Flared connection ϕ1/4)
	Gas line	ϕ3/8 16-15/16 (Flared connection ϕ3/8)
Drain hose		Insulation ϕ1-1/8 Connected part ϕ5/8 O.D

(15/18 KBTU/H)

Piping	Insulation	ϕ1-7/16 O.D
	Liquid line	ϕ1/4 19-11/16 (Flared connection ϕ1/4)
	Gas line	ϕ3/8 16-15/16 (Flared connection ϕ1/2)
Drain hose		Insulation ϕ1-1/8 Connected part ϕ5/8 O.D

© 2023 Mitsubishi Electric Trane HVAC US LLC. All rights reserved.

OUTDOOR UNIT DIMENSIONS: NTXSPH06B112AA

Unit: inch

REQUIRED SPACE

*1 4 in. (100 mm) or more when front and sides of the unit are clear

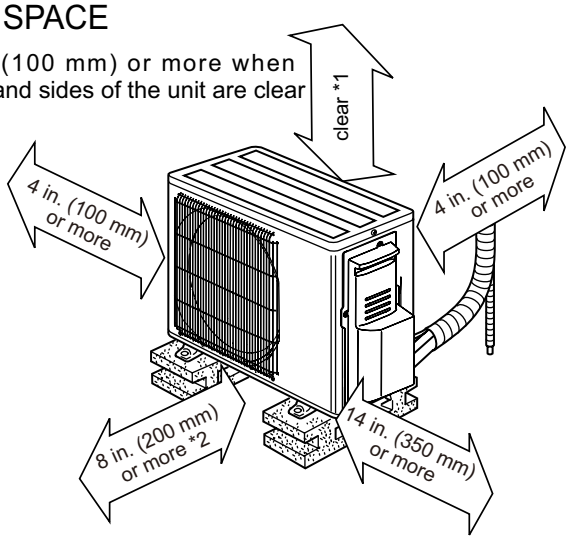

*2 When any 2 sides of left, right and rear of the unit are clear

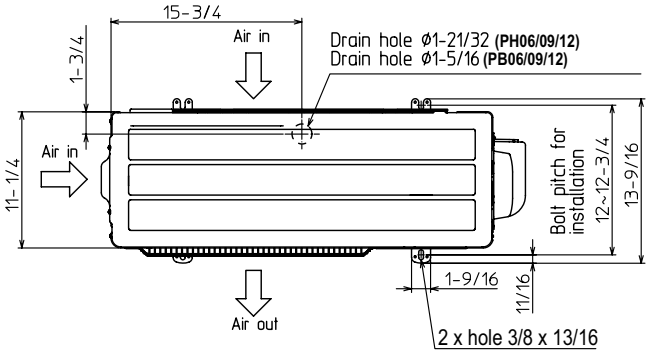

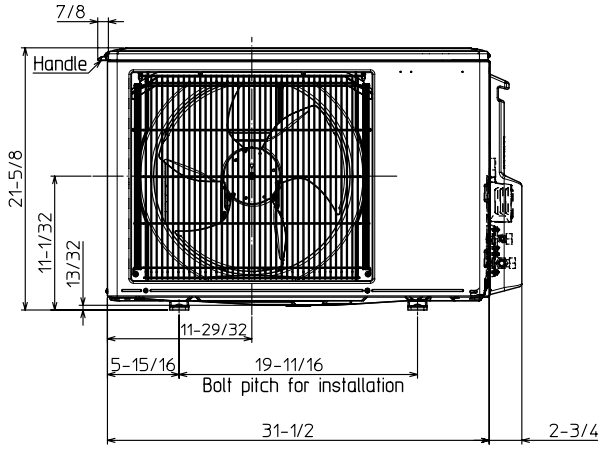

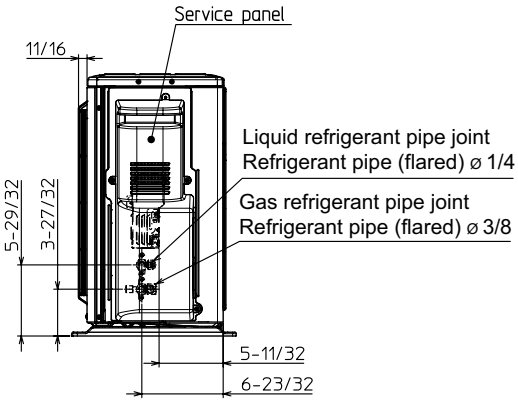

FORM# NTXWPH06B112AA & NTXSPH06B112AA - 202309

Specifications are subject to change without notice.

© 2023 Mitsubishi Electric Trane HVAC US LLC. All rights reserved.