NTXUKS18A112BA & NTXSKS18A112AA
18,000 BTU/H EZ FIT CEILING CASSETTE
18,000 BTU/H HEAT PUMP UNIVERSAL OUTDOOR UNIT

Job Name:

System Reference: Date:

Indoor Unit NTXUKS18A112BA

Outdoor Unit NTXSKS18A112AA

INDOOR UNIT FEATURES
- Fits between 16” joists spacing
- Stylish, square design panel
- Built-in condensate lift mechanism (19.6”)
- Serviceable from the bottom (electrical and flare connections)
- Adjustable fan speeds and vane directions
- Washable antibacterial and deodorizing filter
- Multiple control options available:
  - Hand-held Remote Controller (provided with unit)
  - kumo cloud® smart device app for remote access
  - Third-party interface options
  - Wired or wireless controllers
- Pocket inside the access panel for kumo cloud® Wireless Interface

OUTDOOR UNIT FEATURES
- Variable speed INVERTER-driven compressor
- Innovative Joint Lap DC Motor leads to high efficiency and reliability
- Pulse Amplitude Modulation technology
- High-performance grooved piping for increased heat exchange efficiency

Specifications are subject to change without notice.

© 2023 Mitsubishi Electric Trane HVAC US LLC. All rights reserved.

SPECIFICATIONS: NTXUKS18A112BA & NTXSKS18A112AA

Cooling at 95°F[1]	Maximum Capacity	BTU/H	18,000
	Rated Capacity	BTU/H	18,000
	Minimum Capacity	BTU/H	6,600
	Maximum Power Input	W	1,440
	Rated Power Input	W	1,440
	Moisture Removal	Pints/h	5.3
	Sensible Heat Factor		0.67
	Power Factor [208V / 230V]	%	98.0 / 98.0
Heating at 47°F[2]	Maximum Capacity	BTU/H	22,800
	Rated Capacity	BTU/H	20,000
	Minimum Capacity	BTU/H	8,200
	Maximum Power Input	W	2,140
	Rated Power Input	W	1,170
	Power Factor [208V / 230V]	%	98.0 / 98.0
Heating at 17°F[3]	Maximum Capacity	BTU/H	14,900
	Rated Capacity	BTU/H	13,100
	Maximum Power Input	W	1,780
	Rated Power Input	W	1,460
Heating at 5°F[4]	Maximum Capacity	BTU/H	10,700
	Maximum Power Input	W	1,230
Heating at -4°F[5]	Maximum Capacity	BTU/H	7,900
Efficiency	SEER | SEER2		22.3 | 22.9
	EER[1] | EER2[1]		12.5 | 12.5
	HSPF [IV] | HSPF2 [IV]		12.4 | 10.5
	COP at 47°F[2]		3.3
	COP at 17°F at Maximum Capacity[3]		2.4
	COP at 5°F at Maximum Capacity[4]		2.5
	ENERGY STAR® Certified		Yes
Electrical	Voltage, Phase, Frequency		208/230, 1, 60
	Guaranteed Voltage Range	V AC	187 - 253
	Voltage: Indoor - Outdoor, S1-S2	V AC	208/230
	Voltage: Indoor - Outdoor, S2-S3	V DC	24
	Short-circuit Current Rating [SCCR]	kA	5
	Recommended Fuse/Breaker Size (Oudoor)	A	15
	Recommended Wire Size [Indoor - Outdoor]	AWG	14
	Power Supply		Indoor unit is powered by the outdoor unit
Indoor Unit	MCA	A	1.0
	Fan Motor Full Load Amperage	A	0.68
	Fan Motor Type		DC Motor
	Airflow Rate at Cooling, Dry	CFM	212–293–346–403
	Airflow Rate at Cooling, Wet	CFM	180–249–294–343
	Airflow Rate at Heating, Dry	CFM	212–311–364–417
	Sound Pressure Level [Cooling]	dB[A]	29–36–41–47
	Sound Pressure Level [Heating]	dB[A]	26–37–42–48
	Drain Pipe Size	In. [mm]	1-1/4 [32]
	Condensate Lift Mechanism, Maximum Distance	In. [mm]	19-11/16 [500]
	Coating on Heat Exchanger		—
	External Finish Color		Munsell 4.0GY 9.1/0.2
	Unit Dimensions	W x D x H: In. [mm]	43-3/8 x 14-3/16 x 7-5/16 [1,102 x 360 x 185]
	Package Dimensions	W x D x H: In. [mm]	46-5/16 x 15-3/4 x 11-1/8 [1,177 x 400 x 284]
	Unit Weight	Lbs. [kg]	35 [16]
	Package Weight	Lbs. [kg]	42 [19]
Indoor Unit Operating Temperature Range	Cooling Intake Air Temp [Maximum / Minimum]*	°F	90 DB, 73 WB / 67 DB, 57 WB
	Heating Intake Air Temp [Maximum / Minimum]	°F	80 DB / 70 DB

NOTES:

AHRI Rated Conditions (Rated data is determined at a fixed compressor speed)	[1]Cooling (Indoor // Outdoor)	°F	80 DB, 67 WB // 95 DB, 75 WB
	[2]Heating at 47°F (Indoor // Outdoor)	°F	70 DB, 60 WB // 47 DB, 43 WB
	[3]Heating at 17°F (Indoor // Outdoor)	°F	70 DB, 60 WB // 17 DB, 15 WB
Conditions	[4]Heating at 5°F (Indoor // Outdoor)	°F	70 DB, 60 WB // 5 DB, 4 WB
	[5]Heating at -4°F (Indoor // Outdoor)	°F	70 DB, 60 WB // -4 DB, -5 WB

*Indoor/Outdoor Unit Operating Temperature Range (Cooling Air Temp [Maximum / Minimum]):
- Applications should be restricted to comfort cooling only; equipment cooling applications are not recommended for low ambient temperature conditions.

**Outdoor Unit Operating Temperature Range (Cooling Thermal Lock-out / Re-start Temperatures; Heating Thermal Lock-out / Re-start Temperatures):
- System cuts out in heating mode to avoid thermistor error and automatically restarts at these temperatures.

Specifications are subject to change without notice.

© 2023 Mitsubishi Electric Trane HVAC US LLC. All rights reserved.

SPECIFICATIONS: NTXUKS18A112BA & NTXSKS18A112AA

Outdoor Unit	MCA	A	14.0
	MOCP	A	24
	Fan Motor Full Load Amperage	A	0.7
	Fan Motor Output	W	77
	Airflow Rate [Cooling / Heating]	CFM	1691 / 1691
	Refrigerant Control		LEV
	Defrost Method		Reverse Cycle
	Coating on Heat Exchanger		Blue Fin Coating
	Sound Pressure Level, Cooling[1]	dB(A)	54
	Sound Pressure Level, Heating[2]	dB(A)	55
	Compressor Type		DC INVERTER-driven Twin Rotary
	Compressor Model		SNB130FQBMT
	Compressor Rated Load Amps	A	10
	Compressor Locked Rotor Amps	A	12.5
	Compressor Oil [Type // Charge]	oz.	FV50S //11.8
	External Finish Color		Ivory Munsell 3Y 7.8/1.1
	Base Pan Heater		Optional
	Unit Dimensions	W x D x H: In. [mm]	33-1/16 x 13 x 34-5/8 [840 x 330 x 880]
	Package Dimensions	W x D x H: In. [mm]	38-3/4 x 16-3/4 x 39 [980 x 420 x 990]
	Unit Weight	Lbs. [kg]	127 [58]
	Package Weight	Lbs. [kg]	145 [66]
Outdoor Unit Operating Temperature Range	Cooling Air Temp [Maximum / Minimum]*	°F	115 DB / 14 DB
	Cooling Thermal Lock-out / Re-start Temperatures**	°F	-1 / 3
	Heating Air Temp [Maximum / Minimum]	°F	75 DB, 65 WB / -4 DB, -5 WB
	Heating Thermal Lock-out / Re-start Temperatures**	°F	-14 / -4
Refrigerant	Type		R410A
	Pre-Charged Refrigerant Amount	Lbs, oz	3.0, 9.0
	Maximum Pre-Charged Piping Length	Ft. [m]	25.0 [7.5]
	Additional Refrigerant Charge Per Additional Piping Length	oz./Ft. [g/m]	0.216 [20]
Piping	Gas Pipe Size O.D. [Flared]	In.[mm]	1/2 [12.7]
	Liquid Pipe Size O.D. [Flared]	In.[mm]	1/4 [6.35]
	Maximum Piping Length	Ft. [m]	100 [30]
	Maximum Height Difference	Ft. [m]	50 [15]
	Maximum Number of Bends		10

NOTES:

AHRI Rated Conditions (Rated data is determined at a fixed compressor speed)	[1]Cooling (Indoor // Outdoor)	°F	80 DB, 67 WB // 95 DB, 75 WB
	[2]Heating at 47°F (Indoor // Outdoor)	°F	70 DB, 60 WB // 47 DB, 43 WB
	[3]Heating at 17°F (Indoor // Outdoor)	°F	70 DB, 60 WB // 17 DB, 15 WB
Conditions	[4]Heating at 5°F (Indoor // Outdoor)	°F	70 DB, 60 WB // 5 DB, 4 WB
	[5]Heating at -4°F (Indoor // Outdoor)	°F	70 DB, 60 WB // -4 DB, -5 WB

*Indoor/Outdoor Unit Operating Temperature Range (Cooling Air Temp [Maximum / Minimum]):
- Applications should be restricted to comfort cooling only; equipment cooling applications are not recommended for low ambient temperature conditions.

**Outdoor Unit Operating Temperature Range (Cooling Thermal Lock-out / Re-start Temperatures; Heating Thermal Lock-out / Re-start Temperatures):
- System cuts out in heating mode to avoid thermistor error and automatically restarts at these temperatures.

Specifications are subject to change without notice.

© 2023 Mitsubishi Electric Trane HVAC US LLC. All rights reserved.

INDOOR UNIT ACCESSORIES: NTXUKS18A112BA

Control Interface	BACnet® and Modbus® Interface	☐ PAC-UKPRC001-CN-1
	CN24 Relay Kit	☐ CN24RELAY-KIT-CM3
	IT Extender	☐ PAC-WHS01IE-E
	kumo station® for kumo cloud®	☐ TAC-WHS01HC-E
	System Control Interface	☐ MAC-334IF-E
	Thermostat Interface	☐ PAC-US444CN-1
	Thermostat Interface	☐ PAC-US445CN-1
	USNAP Adapter	☐ PAC-WHS01UP-E
	Wireless Interface for kumo cloud®	☐ PAC-USWHS002-WF-2
Remote Sensor	Wired Remote Sensor	☐ M21EAA307
	Wireless temperature and humitity sensor for kumo cloud®	☐ PAC-USWHS003-TH-1
Wired Remote Controller	Deluxe Wired MA Remote Controller†	☐ TAR-40MAAU
	Simple Ductless Wired Remote Controller	☐ PAC-SDW01RC-1
	Simple MA Remote Controller†	☐ TAC-YT53CRAU-J
	Touch MA Controller†	☐ TAR-CT01MAU-SB
Wireless Remote Controller	kumo touch™ RedLINK™ Wireless Controller	☐ MHK2
	Lockdown bracket for remote controller	☐ RCMKP1CB
Condensate	Blue Diamond (Advanced) Mini Condensate Pump w/ Reservoir & Sensor (208/230V) [recommended]	☐ X87-721
	Blue Diamond (MicroBlue) Mini Condensate Pump (110/208/230V) up to 18,000 BTU/H	☐ X86-003
	Refco Condensate Pump (100-240 VAC) up to 120,000 BTU/H	☐ COMBI
Disconnect Switch	(30A/600V/UL) [fits 2” X 4” utility box] - Black	☐ TAZ-MS303
	(30A/600V/UL) [fits 2” X 4” utility box] - White	☐ TAZ-MS303W
Filter	Anti-allergy Enzyme Filter	☐ MAC-408FT-E
Grille	Grille (required)	☑ TLP-444W
Lineset	100’ x 1/4” x 100’ / 1/2” Lineset (Twin-Tube Insulation)	☐ MLS141212T-100
	15’ x 1/4” x 15’ / 1/2” Lineset (Twin-Tube Insulation)	☐ MLS141212T-15
	30’ x 1/4” x 30’ / 1/2” Lineset (Twin-Tube Insulation)	☐ MLS141212T-30
	50’ x 1/4” x 50’ / 1/2” Lineset (Twin-Tube Insulation)	☐ MLS141212T-50
	65’ x 1/4” x 65’ / 1/2” Lineset (Twin-Tube Insulation)	☐ MLS141212T-65

NOTES:
†Requires MAC-334IF-E
- Nv-Series EZ FIT® Recessed Ceiling Cassette, Floor-mount and Wall-mount
  Allows indoor units to connect to an MA Controller:
  Deluxe MA Remote Controller
  Simple MA Controller
  Touch MA Controller

© 2023 Mitsubishi Electric Trane HVAC US LLC. All rights reserved.

OUTDOOR UNIT ACCESSORIES: NTXSKS18A112AA

Air Outlet Guide	Air Outlet Guide	☐ MAC-886SG-E
Control/Service Tool	M- & P-Series Maintenance Tool Cable Set	☐ M21EC0397
	USB/UART Conversion Cable (Required for all laptop connection)	☐ M21EC1397
Mini-Split Wire	14 Gauge, 4 wire MiniSplit Cable—250 ft. roll	☐ S144-250
	14 Gauge, 4 wire MiniSplit Cable—250 ft. roll	☐ SW144-250
	14 Gauge, 4 wire MiniSplit Cable—50 ft. roll	☐ S144-50
	14 Gauge, 4 wire MiniSplit Cable—50 ft. roll	☐ SW144-50
	16 Gauge, 4 wire MiniSplit Cable—250 ft. roll	☐ S164-250
	16 Gauge, 4 wire MiniSplit Cable—250 ft. roll	☐ SW164-250
	16 Gauge, 4 wire MiniSplit Cable—50 ft. roll	☐ S164-50
	16 Gauge, 4 wire MiniSplit Cable—50 ft. roll	☐ SW164-50
Mounting Pad	Condensing Unit Mounting Pad: 16” x 36” x 3”	☐ ULTRILITE1
	Outdoor Unit 3-1/4 inch Mounting Base (Pair) - Plastic	☐ DSD-400P
Optional Defrost Heater	Base Heater	☐ MAC-642BH-U1
Stand	18” Single Fan Stand	☐ QSMS1801M
	24” Single Fan Stand	☐ QSMS2401M
	Condenser Wall Bracket	☐ QSWB2000M-1
	Outdoor Unit Stand — 12” High	☐ QSMS1201M

© 2023 Mitsubishi Electric Trane HVAC US LLC. All rights reserved.

INDOOR UNIT DIMENSIONS: NTXUKS18A112BA

Unit: inch

INDOOR UNIT OUTLINE DRAWING

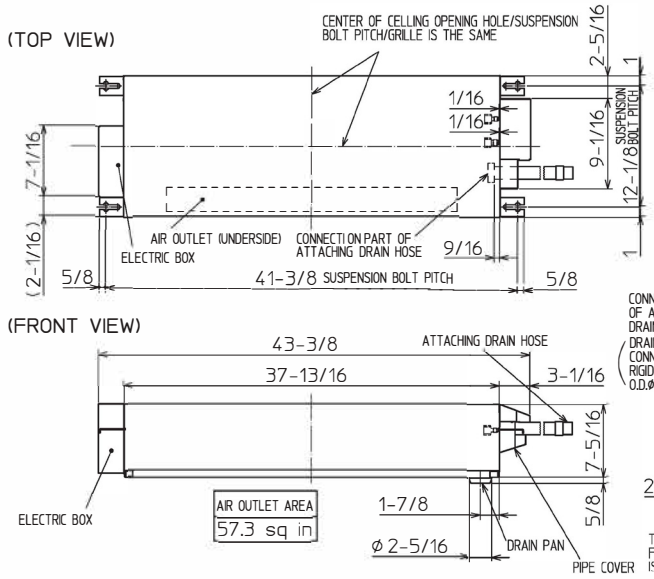

REMOTE CONTROLLER OUTLINE DRAWING

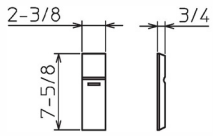

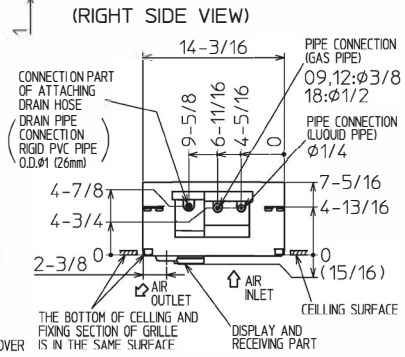

GRILLE OUTLINE DRAWING
(TLP-444W)

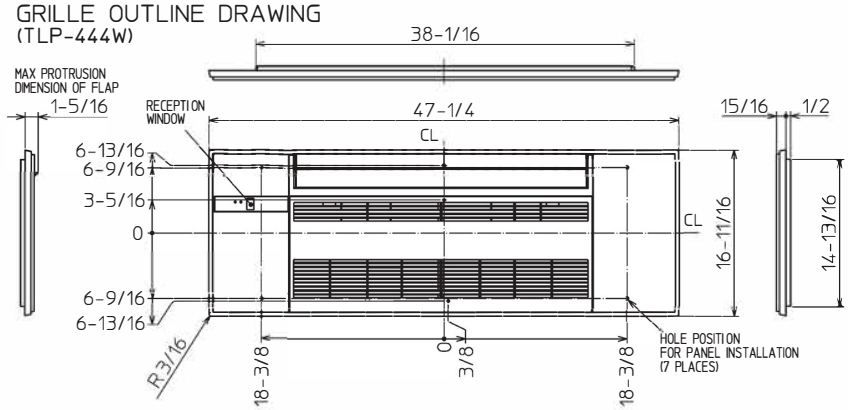

		09A/12A	18A
EXTENSION PIPE	LIQUID PIPE O.D.	Ø1/4	
	GAS PIPE O.D.	Ø3/8	Ø1/2
CONNECTIONG OF PIPE	LIQUID PIPE	FLARED CONNECTION Ø1/4	
	GAS PIPE	FLARED CONNECTION Ø3/8	FLARED CONNECTION Ø1/2
DRAIN HOSE		HEAT INSULATER O.D. Ø1-1/4 / CONNECTION I.D. Ø1 / EFFECTIVE LENGTH 18-7/8	
DRAIN PIPE CONNECTION		RIGID PVC PIPE O.D. Ø1 (26mm)	

NOTE1. CUT THE DRAIN HOSE (ACCESSORY) FOR USE, IF NECESSARY.

INDOOR UNIT DETAIL VIEW
(TOP VIEW)

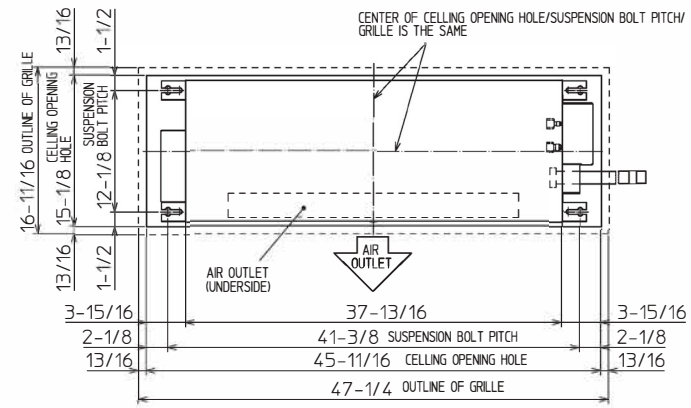

THE METHOD FOR STANDING DRAIN FROM INDOOR UNIT
※ CUT THE DRAIN HOSE (ACCESSORY) FOR USE, IF NECESSARY.

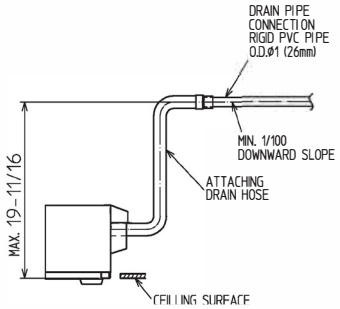

(FRONT VIEW)

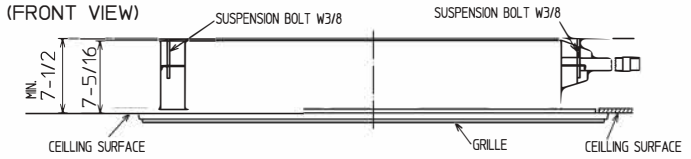

© 2023 Mitsubishi Electric Trane HVAC US LLC. All rights reserved.

OUTDOOR UNIT DIMENSIONS: NTXSKS18A112AA

Unit: inch

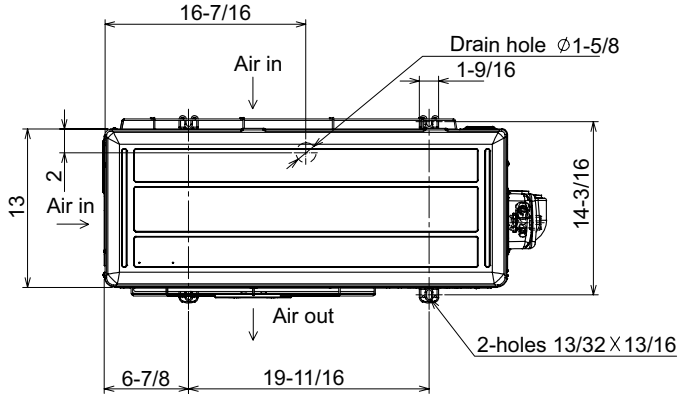

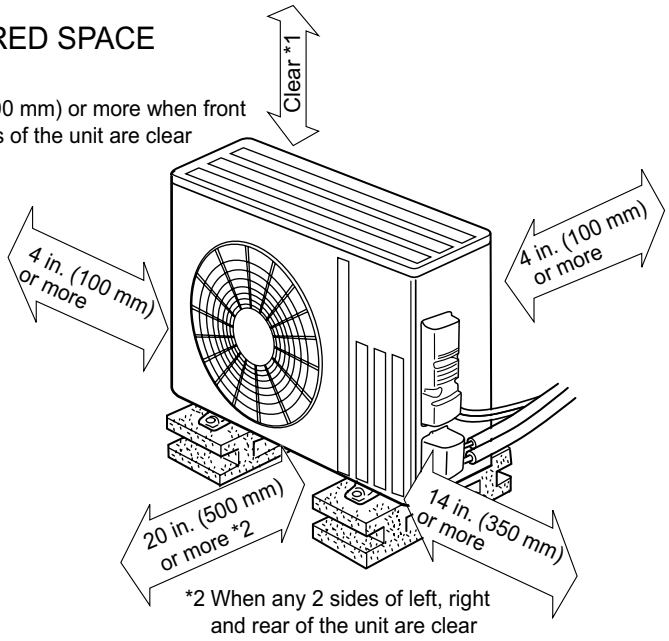

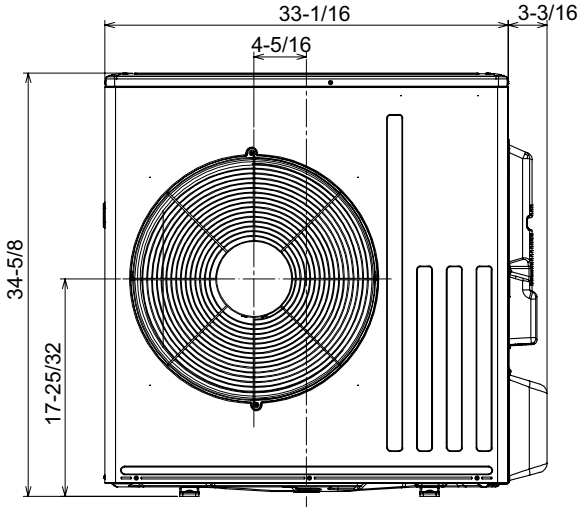

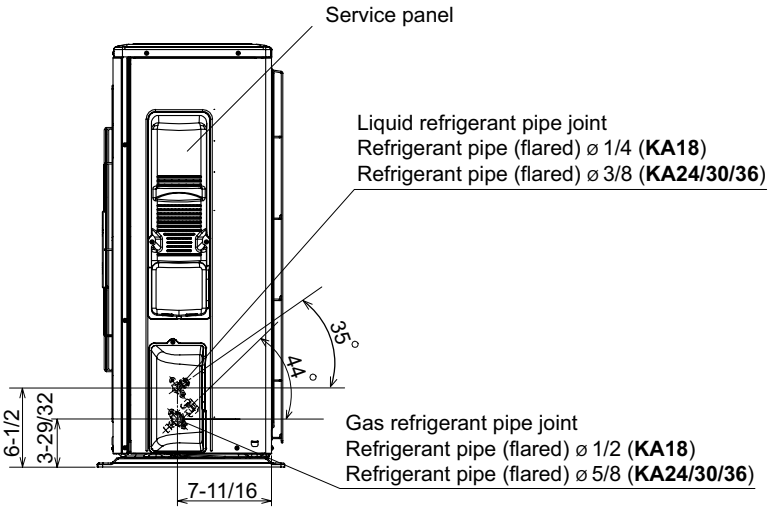

FORM# NTXUKS18A112BA & NTXSKS18A112AA - 202304

Specifications are subject to change without notice.

© 2023 Mitsubishi Electric Trane HVAC US LLC. All rights reserved.