NTXCKS12A112AA & NTXSKS12A112AA
12,000 BTU/H 2' X 2' 4-WAY CEILING CASSETTE
12,000 BTU/H HEAT PUMP UNIVERSAL OUTDOOR UNIT

Job Name:

System Reference: Date:

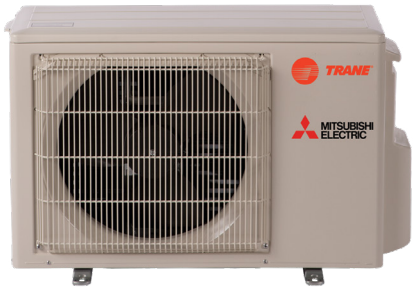

Indoor Unit NTXCKS12A112AA

Outdoor Unit NTXSKS12A112AA

INDOOR UNIT FEATURES
- Ceiling-recessed cassette (24"x24") ductless heat pump
- Install Konnect Series in a drywalled ceiling (with an access panel for servicing) or in a 2'x2' drop ceiling
- Wide airflow pattern for excellent air distribution
- Optional 3D i-see Sensor®
- Fresh air intake provided in the main body
- Built-in drain condensate lift mechanism (lifts to 33")
- Multiple control options available:
  - kumo cloud® smart device app for remote access
  - Third-party interface options
  - Wired or wireless controllers
- Long-life air filter included
- Individual vane control

OUTDOOR UNIT FEATURES
- Variable speed INVERTER-driven compressor
- Innovative Joint Lap DC Motor leads to high efficiency and reliability
- Pulse Amplitude Modulation technology
- High-performance grooved piping for increased heat exchange efficiency

Specifications are subject to change without notice.

© 2023 Mitsubishi Electric Trane HVAC US LLC. All rights reserved.

SPECIFICATIONS: NTXCKS12A112AA & NTXSKS12A112AA

Cooling at 95°F[1]	Maximum Capacity	BTU/H	12,000
	Rated Capacity	BTU/H	12,000
	Minimum Capacity	BTU/H	3,900
	Maximum Power Input	W	900
	Rated Power Input	W	900
	Moisture Removal	Pints/h	2.8
	Sensible Heat Factor		0.74
	Power Factor [208V / 230V]	%	98.0 / 98.0
Heating at 47°F[2]	Maximum Capacity	BTU/H	13,000
	Rated Capacity	BTU/H	13,000
	Minimum Capacity	BTU/H	4,800
	Maximum Power Input	W	1,310
	Rated Power Input	W	4,800
	Power Factor [208V / 230V]	%	98.0 / 98.0
Heating at 17°F[3]	Maximum Capacity	BTU/H	8,900
	Rated Capacity	BTU/H	8,900
	Maximum Power Input	W	1,130
	Rated Power Input	W	1,130
Heating at 5°F[4]	Maximum Capacity	BTU/H	6,100
	Maximum Power Input	W	760
Heating at -4°F[5]	Maximum Capacity	BTU/H	4,400
Efficiency	SEER | SEER2		22.0 | 22.0
	EER[1] | EER2[1]		13.3 | 13.3
	HSPF [IV] | HSPF2 [IV]		11.4 | 9.7
	COP at 47°F[2]		2.9
	COP at 17°F at Maximum Capacity[3]		2.31
	COP at 5°F at Maximum Capacity[4]		2.35
Electrical	Voltage, Phase, Frequency		208/230, 1, 60
	Guaranteed Voltage Range	V AC	187 - 253
	Voltage: Indoor - Outdoor, S1-S2	V AC	208/230
	Voltage: Indoor - Outdoor, S2-S3	V DC	24
	Short-circuit Current Rating [SCCR]	kA	5
	Recommended Fuse/Breaker Size (Oudoor)	A	15
	Recommended Wire Size [Indoor - Outdoor]	AWG	14
	Power Supply		Indoor unit is powered by the outdoor unit
Indoor Unit	MCA	A	0.3
	Fan Motor Full Load Amperage	A	0.24
	Fan Motor Type		DC Motor
	Airflow Rate at Cooling, Dry	CFM	230–265–335
	Airflow Rate at Cooling, Wet	CFM	207–252–302
	Airflow Rate at Heating, Dry	CFM	230–265–335
	Sound Pressure Level [Cooling]	dB[A]	25–30–34
	Sound Pressure Level [Heating]	dB[A]	25–30–34
	Drain Pipe Size	In. [mm]	1-1/4 [32]
	Condensate Lift Mechanism, Maximum Distance	In. [mm]	33 [850]
	Coating on Heat Exchanger		—
	External Finish Color		Munsell 1.0Y 9.2/0.0
	Unit Dimensions	W x D x H: In. [mm]	22-7/16 x 22-7/16 x 9-21/32 [570 x 570 x 245]
	Package Dimensions	W x D x H: In. [mm]	24-13/32 x 27-15/16 x 9-7/16 [620 x 710 x 240]
	Unit Weight	Lbs. [kg]	31 [13.9]
	Package Weight	Lbs. [kg]	37 [17]
Indoor Unit Operating Temperature Range	Cooling Intake Air Temp [Maximum / Minimum]*	°F	90 DB, 72 WB / 68 DB, 61 WB
	Heating Intake Air Temp [Maximum / Minimum]	°F	77 DB / 59 DB

NOTES:

AHRI Rated Conditions (Rated data is determined at a fixed compressor speed)	[1]Cooling (Indoor // Outdoor)	°F	80 DB, 67 WB // 95 DB, 75 WB
	[2]Heating at 47°F (Indoor // Outdoor)	°F	70 DB, 60 WB // 47 DB, 43 WB
	[3]Heating at 17°F (Indoor // Outdoor)	°F	70 DB, 60 WB // 17 DB, 15 WB
Conditions	[4]Heating at 5°F (Indoor // Outdoor)	°F	70 DB, 60 WB // 5 DB, 4 WB
	[5]Heating at -4°F (Indoor // Outdoor)	°F	70 DB, 60 WB // -4 DB, -5 WB

*Indoor/Outdoor Unit Operating Temperature Range (Cooling Air Temp [Maximum / Minimum]):
- Applications should be restricted to comfort cooling only; equipment cooling applications are not recommended for low ambient temperature conditions.

**Outdoor Unit Operating Temperature Range (Cooling Thermal Lock-out / Re-start Temperatures; Heating Thermal Lock-out / Re-start Temperatures):
- System cuts out in heating mode to avoid thermistor error and automatically restarts at these temperatures.

Specifications are subject to change without notice.

© 2023 Mitsubishi Electric Trane HVAC US LLC. All rights reserved.

SPECIFICATIONS: NTXCKS12A112AA & NTXSKS12A112AA

Outdoor Unit	MCA	A	9.0
	MOCP	A	16
	Fan Motor Full Load Amperage	A	0.5
	Fan Motor Output	W	55
	Airflow Rate [Cooling / Heating]	CFM	1229 / 1172
	Refrigerant Control		LEV
	Defrost Method		Reverse Cycle
	Coating on Heat Exchanger		Blue Fin Coating
	Sound Pressure Level, Cooling[1]	dB(A)	54
	Sound Pressure Level, Heating[2]	dB(A)	55
	Compressor Type		DC INVERTER-driven Twin Rotary
	Compressor Model		SNB092FQAMT
	Compressor Rated Load Amps	A	6.6
	Compressor Locked Rotor Amps	A	8.2
	Compressor Oil [Type // Charge]	oz.	FV50S // 11.8
	External Finish Color		Ivory Munsell 3Y 7.8/1.1
	Base Pan Heater		Optional
	Unit Dimensions	W x D x H: In. [mm]	31-1/2 x 11-1/4 x 21-5/8 [800 x 285 x 550]
	Package Dimensions	W x D x H: In. [mm]	37 x 14-15/16 x 24-13/16 [940 x 380 x 630]
	Unit Weight	Lbs. [kg]	81 [37]
	Package Weight	Lbs. [kg]	88 [40]
Outdoor Unit Operating Temperature Range	Cooling Air Temp [Maximum / Minimum]*	°F	115 DB / 14 DB
	Cooling Thermal Lock-out / Re-start Temperatures**	°F	-1 / 3
	Heating Air Temp [Maximum / Minimum]	°F	75 DB, 65 WB / -4 DB, -5 WB
	Heating Thermal Lock-out / Re-start Temperatures**	°F	-14 / -4
Refrigerant	Type		R410A
	Pre-Charged Refrigerant Amount	Lbs, oz	2.0, 9.0
	Maximum Pre-Charged Piping Length	Ft. [m]	25.0 [7.5]
	Additional Refrigerant Charge Per Additional Piping Length	oz./Ft. [g/m]	0.216 [20]
Piping	Gas Pipe Size O.D. [Flared]	In.[mm]	3/8 [9.52]
	Liquid Pipe Size O.D. [Flared]	In.[mm]	1/4 [6.35]
	Maximum Piping Length	Ft. [m]	65 [20]
	Maximum Height Difference	Ft. [m]	40 [12]
	Maximum Number of Bends		10

NOTES:

AHRI Rated Conditions (Rated data is determined at a fixed compressor speed)	[1]Cooling (Indoor // Outdoor)	°F	80 DB, 67 WB // 95 DB, 75 WB
	[2]Heating at 47°F (Indoor // Outdoor)	°F	70 DB, 60 WB // 47 DB, 43 WB
	[3]Heating at 17°F (Indoor // Outdoor)	°F	70 DB, 60 WB // 17 DB, 15 WB
Conditions	[4]Heating at 5°F (Indoor // Outdoor)	°F	70 DB, 60 WB // 5 DB, 4 WB
	[5]Heating at -4°F (Indoor // Outdoor)	°F	70 DB, 60 WB // -4 DB, -5 WB

*Indoor/Outdoor Unit Operating Temperature Range (Cooling Air Temp [Maximum / Minimum]):
- Applications should be restricted to comfort cooling only; equipment cooling applications are not recommended for low ambient temperature conditions.

**Outdoor Unit Operating Temperature Range (Cooling Thermal Lock-out / Re-start Temperatures; Heating Thermal Lock-out / Re-start Temperatures):
- System cuts out in heating mode to avoid thermistor error and automatically restarts at these temperatures.

Specifications are subject to change without notice.

© 2023 Mitsubishi Electric Trane HVAC US LLC. All rights reserved.

INDOOR UNIT ACCESSORIES: NTXCKS12A112AA

Control Interface	3-Pin Connector	☐ PAC-715AD
	Airzone ZBS Wired Blueface Principal Controller White	☐ AZZBSBLUEFACECB
	Airzone ZBS Wired Blueface Principal Controller White	☐ AZZBSBLUEZEROCB
	Airzone ZBS Wired Lite Controller White	☐ AZZBSLITECB
	Airzone ZBS Wireless Lite Controller White	☐ AZZBSLITERB
	Airzone ZBS Wireless Think Controller White	☐ AZZBSTHINKRB
	BACnet® and Modbus® Interface	☐ PAC-UKPRC001-CN-1
	CN24 Relay Kit	☐ CN24RELAY-KIT-CM3
	Connector and wire for Operation status/error using CN51	☐ PAC-725AD
	Connector cable for remote display	☐ PAC-SA88HA-EP
	IT Extender	☐ PAC-WHS01IE-E
	kumo station® for kumo cloud®	☐ TAC-WHS01HC-E
	Remote Operation Adapter‡	☐ PAC-SF40RM-E
	Thermostat Interface	☐ PAC-US444CN-1
	Thermostat Interface	☐ PAC-US445CN-1
	USNAP Adapter	☐ PAC-WHS01UP-E
	Wireless Interface for kumo cloud®	☐ PAC-USWHS002-WF-2
Remote Sensor	Flush Mount Remote Temperature Sensor	☐ PAC-USSEN002-FM-1
	Flush Mount Temperature Sensor	☐ PAC-USSEN001-FM-1
	Remote Temperature Sensor	☐ PAC-SE41TS-E
	Wireless temperature and humitity sensor for kumo cloud®	☐ PAC-USWHS003-TH-1
Wired Remote Controller	Deluxe Wired MA Remote Controller†	☐ TAR-40MAAU
	Simple Ductless Wired Remote Controller	☐ PAC-SDW01RC-1
	Simple MA Remote Controller†	☐ TAC-YT53CRAU-J
	Touch MA Controller†	☐ TAR-CT01MAU-SB
Wireless Remote Controller	kumo touch™ RedLINK™ Wireless Controller	☐ MHK2
	Wireless MA Receiver	☐ PAR-SR32MA-E
	Wireless MA Remote Controller	☐ TAR-FL32MA-E
	Wireless Receiver	☐ PAR-WSC009FA-E
	Wireless Remote Contoller	☐ PAR-SL101A-E
Condensate	Blue Diamond (Advanced) Mini Condensate Pump w/ Reservoir & Sensor (208/230V) [recommended]	☐ X87-721
	Blue Diamond (MicroBlue) Mini Condensate Pump (110/208/230V) up to 18,000 BTU/H	☐ X86-003
	Refco Condensate Pump (100-240 VAC) up to 120,000 BTU/H	☐ COMBI
Disconnect Switch	(30A/600V/UL) [fits 2” X 4” utility box] - Black	☐ TAZ-MS303
Lineset	15’ x 1/4” x 15’ / 3/8” Lineset (Twin-Tube Insulation)	☐ MLS143812T-15
	30’ x 1/4” x 30’ / 3/8” Lineset (Twin-Tube Insulation)	☐ MLS143812T-30
	50’ x 1/4” x 50’ / 3/8” Lineset (Twin-Tube Insulation)	☐ MLS143812T-50
	65’ x 1/4” x 65’ / 3/8” Lineset (Twin-Tube Insulation)	☐ MLS143812T-65

NOTES:
‡PAC-SF40RM-E (Unable to use with wireless remote controller)

© 2023 Mitsubishi Electric Trane HVAC US LLC. All rights reserved.

OUTDOOR UNIT ACCESSORIES: NTXSKS12A112AA

Air Outlet Guide	Air Outlet Guide	☐ MAC-889SG
Control/Service Tool	M- & P-Series Maintenance Tool Cable Set	☐ M21EC0397
	USB/UART Conversion Cable (Required for all laptop connection)	☐ M21EC1397
Hail Guards	Hail Guard	☐ HG-B4
Mini-Split Wire	14 Gauge, 4 wire MiniSplit Cable—250 ft. roll	☐ S144-250
	14 Gauge, 4 wire MiniSplit Cable—250 ft. roll	☐ SW144-250
	14 Gauge, 4 wire MiniSplit Cable—50 ft. roll	☐ S144-50
	14 Gauge, 4 wire MiniSplit Cable—50 ft. roll	☐ SW144-50
	16 Gauge, 4 wire MiniSplit Cable—250 ft. roll	☐ S164-250
	16 Gauge, 4 wire MiniSplit Cable—250 ft. roll	☐ SW164-250
	16 Gauge, 4 wire MiniSplit Cable—50 ft. roll	☐ S164-50
	16 Gauge, 4 wire MiniSplit Cable—50 ft. roll	☐ SW164-50
Mounting Pad	Condensing Unit Mounting Pad: 16” x 36” x 3”	☐ ULTRILITE1
	Outdoor Unit 3-1/4 inch Mounting Base (Pair) - Plastic	☐ DSD-400P
Port Adaptor	Adaptor: 1/2” x 3/8” (required)	☑ MAC-A455JP-E
Stand	18” Single Fan Stand	☐ QSMS1801M
	24” Single Fan Stand	☐ QSMS2401M
	Condenser Wall Bracket	☐ QSWB2000M-1
	Outdoor Unit Stand — 12” High	☐ QSMS1201M

© 2023 Mitsubishi Electric Trane HVAC US LLC. All rights reserved.

INDOOR UNIT DIMENSIONS: NTXCKS12A112AA

Unit: inch (mm)

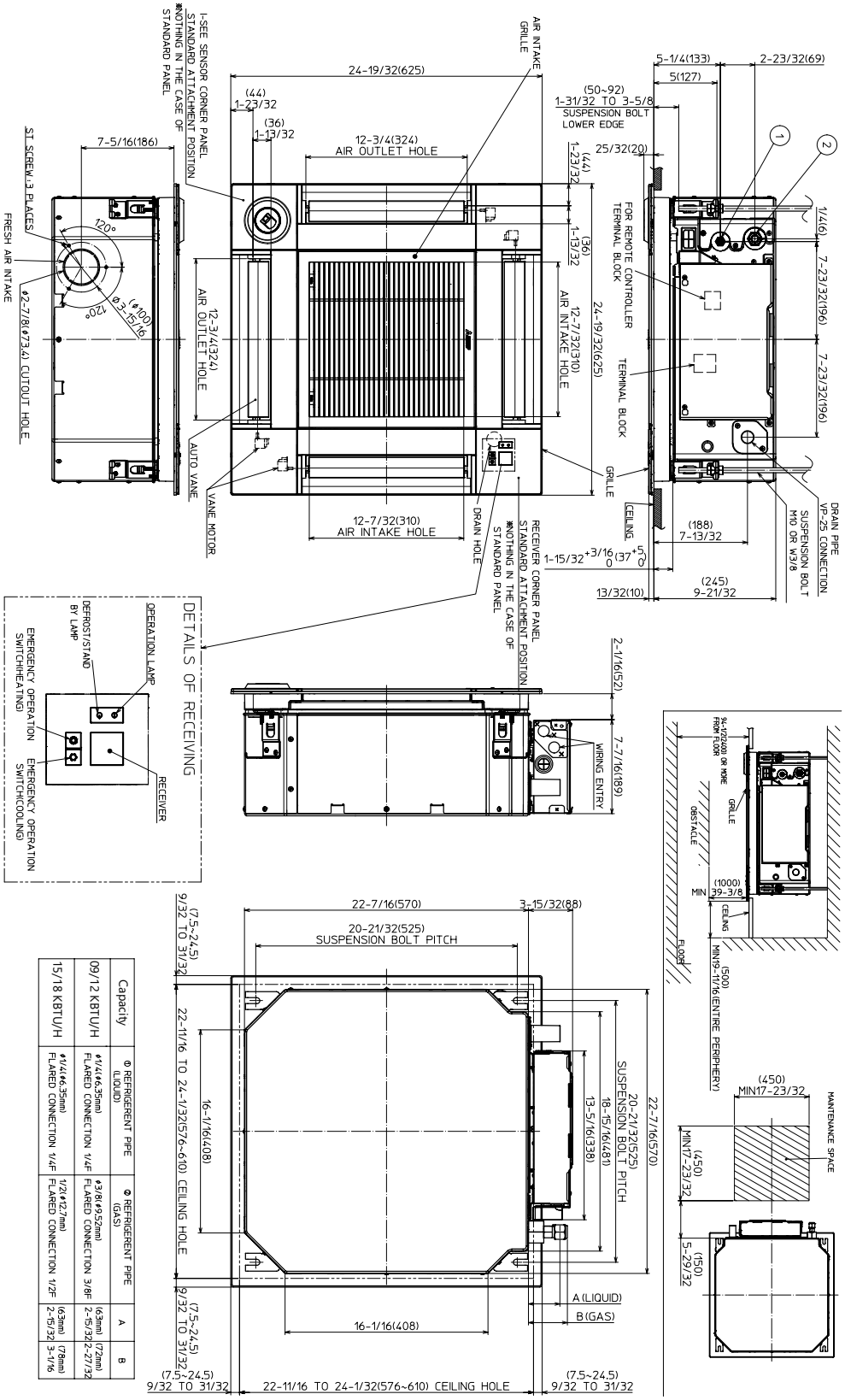

Capacity	Φ REFRIGERENT PIPE (LIQUID)	Φ REFRIGERENT PIPE (GAS)	A	B
09/12 KBTU/H	φ1/4(φ6.35mm) FLARED CONNECTION 1/4F	φ3/8(φ9.52mm) FLARED CONNECTION 3/8F	(63mm) 2-15/32	(72mm) 2-27/32
15/18 KBTU/H	φ1/4(φ6.35mm) FLARED CONNECTION 1/4F	1/2(φ12.7mm) FLARED CONNECTION 1/2F	(63mm) 2-15/32	(78mm) 3-1/16

Specifications are subject to change without notice.

© 2023 Mitsubishi Electric Trane HVAC US LLC. All rights reserved.

OUTDOOR UNIT DIMENSIONS: NTXSKS12A112AA

Unit: inch(mm)

REQUIRED SPACE

*1 4 in. (100 mm) or more when front and sides of the unit are clear

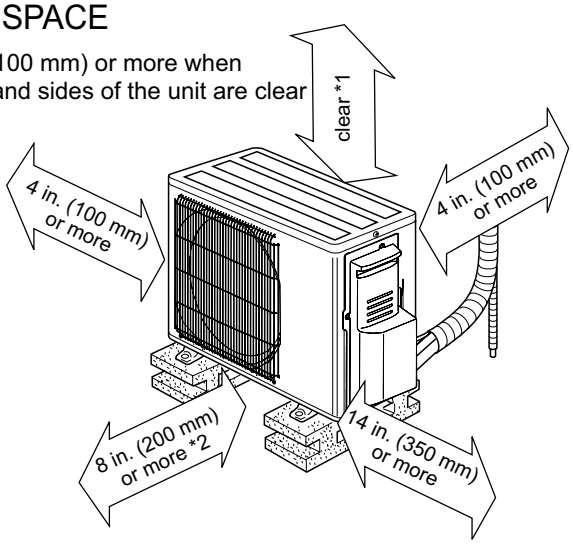

*2 When any 2 sides of left, right and rear of the unit are clear

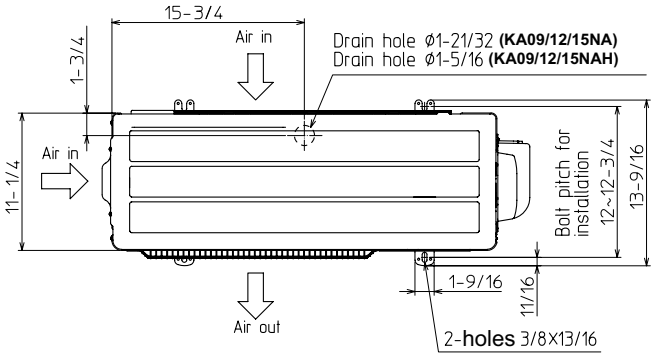

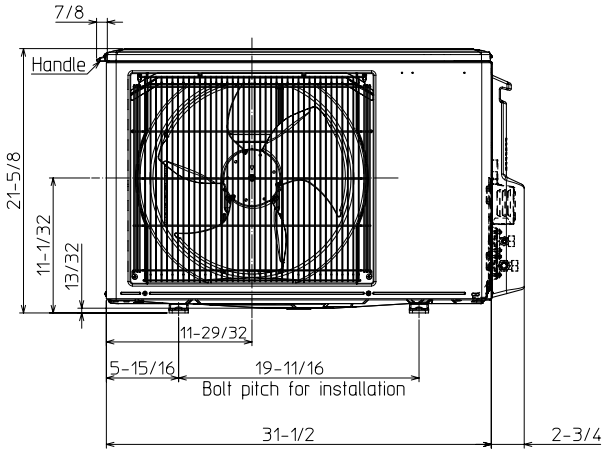

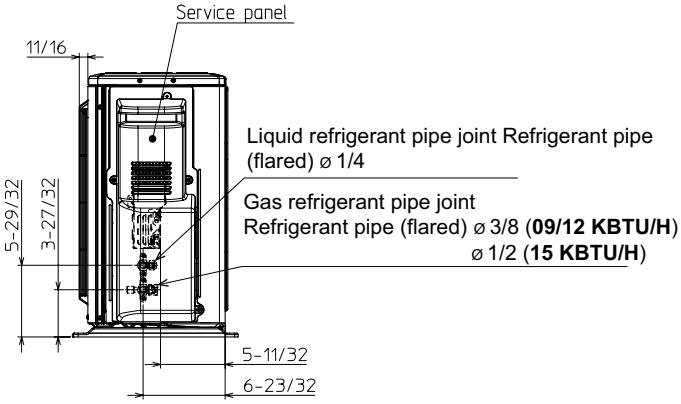

FORM# NTXCKS12A112AA & NTXSKS12A112AA - 202304

Specifications are subject to change without notice.

© 2023 Mitsubishi Electric Trane HVAC US LLC. All rights reserved.