NTXAMT18A112AA & NTXSKH18A112AA
18,000 BTU/H MULTI-POSITION AIR HANDLER
18,000 BTU/H HYPER-HEATING UNIVERSAL OUTDOOR UNIT

Job Name:

System Reference: Date:

Indoor Unit NTXAMT18A112AA

Outdoor Unit NTXSKH18A112AA

INDOOR UNIT FEATURES

- Ducted air handler provides a solution to cool and heat large zones
- Highly efficient totally enclosed ECM motor
- Selectable external static pressure: 0.30, 0.50 and 0.80 in.WG with 3 fan speeds at each static setting
- 1 inch R4.2 fiberglass free insulation reduces condensation and boosts efficiency
- Positive pressure cabinet with air leakage of less than 2.0% at 1.0 In.WG (Tested per ASHRAE Standard 193)
- Unique blow through design allows simple coil cleaning when the blower is removed
- Multi-position installation: horizontal (left or right), vertical (up or down)
- Optional electric heat kit for additional heat capacity
- Optional humidifier control and ERV control
- Built-in humidifier control, ERV control and auxiliary heat control
- Optional downflow kit
- Multiple control options available:
  - kumo cloud® smart device app for remote access
  - Third-party interface options
  - Wired or wireless controllers

OUTDOOR UNIT FEATURES

- The outdoor unit powers the indoor unit, and should a power outage occur, the system is automatically restarted when power returns
- INVERTER-driven compressor and LEV provide high efficiency and comfort while using only the energy needed to maintain maximum performance
- Pro-Heat performance offers 100% heating capacity at 5° F
- Hot-Start Technology: no cold air rush at equipment startup or when restarting after Defrost Cycle
- Quiet operation
- Blue Fin anti-corrosion treatment applied to the outdoor unit heat exchanger for increased coil protection and longer life
- Built-in base pan heater
- Innovative Joint Lap DC Motor leads to high efficiency and reliability
- Pulse Amplitude Modulation technology

Specifications are subject to change without notice.

© 2023 Mitsubishi Electric Trane HVAC US LLC. All rights reserved.

SPECIFICATIONS: NTXAMT18A112AA & NTXSKH18A112AA

Cooling at 95°F[1]	Maximum Capacity	BTU/H	18,000
	Rated Capacity	BTU/H	18,000
	Minimum Capacity	BTU/H	9,360
	Maximum Power Input	W	1,440
	Rated Power Input	W	1,440
	Moisture Removal	Pints/h	1.1
	Sensible Heat Factor		0.93
	Power Factor [208V / 230V]	%	96.0 / 96.0
Heating at 47°F[2]	Maximum Capacity	BTU/H	28,000
	Rated Capacity	BTU/H	21,600
	Minimum Capacity	BTU/H	8,800
	Maximum Power Input	W	3,140
	Rated Power Input	W	1,880
	Power Factor [208V / 230V]	%	97.0 / 97.0
Heating at 17°F[3]	Maximum Capacity	BTU/H	21,600
	Rated Capacity	BTU/H	14,300
	Maximum Power Input	W	2,740
	Rated Power Input	W	1,810
Heating at 5°F[4]	Maximum Capacity	BTU/H	21,600
	Maximum Power Input	W	3,600
Efficiency	SEER | SEER2		18.4 | 18.7
	EER[1] | EER2[1]		12.5 | 12.4
	HSPF [IV] | HSPF2 [IV]		10.4 | 9.2
	COP at 47°F[2]		3.3
	COP at 17°F at Maximum Capacity[3]		2.31
	COP at 5°F at Maximum Capacity[4]		1.75
	ENERGY STAR® Certified		Yes
Electrical	Voltage, Phase, Frequency		208/230, 1, 60
	Guaranteed Voltage Range	V AC	187 - 253
	Voltage: Indoor - Outdoor, S1-S2	V AC	208/230
	Voltage: Indoor - Outdoor, S2-S3	V DC	24
	Short-circuit Current Rating [SCCR]	kA	5
	Recommended Fuse/Breaker Size (Oudoor)	A	20
	Recommended Wire Size [Indoor - Outdoor]	AWG	14
	Power Supply		Indoor unit is powered by the outdoor unit
Indoor Unit	MCA	A	3.0
	Fan Motor Full Load Amperage	A	2.4
	Fan Motor Type		DC Motor
	Airflow Rate at Cooling, Dry	CFM	471–573–675
	Airflow Rate at Heating, Dry	CFM	471–573–675
	Sound Pressure Level [Cooling]	dB[A]	33–36–41
	Sound Pressure Level [Heating]	dB[A]	33–36–41
	External Static Pressure	in.WG	0.30–0.5–0.8
	Drain Pipe Size	In. [mm]	3/4 [19.05]
	Coating on Heat Exchanger		—
	External Finish Color		Hot-dip coated steel (ZAM)
	Unit Dimensions	W x D x H: In. [mm]	17 x 21-5/8 x 39-13/16 [432 x 549 x 1,011]
	Package Dimensions	W x D x H: In. [mm]	17 x 28-3/4 x 44-3/8 [460 x 730 x 1,011]
	Unit Weight	Lbs. [kg]	93 [42]
	Package Weight	Lbs. [kg]	106 [48]
Indoor Unit Operating Temperature Range	Cooling Intake Air Temp [Maximum / Minimum]*	°F	90 DB, 72 WB / 68 DB, 61 WB
	Heating Intake Air Temp [Maximum / Minimum]	°F	77 DB / 59 DB

NOTES:

AHRI Rated Conditions (Rated data is determined at a fixed compressor speed)	[1]Cooling (Indoor // Outdoor)	°F	80 DB, 67 WB // 95 DB, 75 WB
	[2]Heating at 47°F (Indoor // Outdoor)	°F	70 DB, 60 WB // 47 DB, 43 WB
	[3]Heating at 17°F (Indoor // Outdoor)	°F	70 DB, 60 WB // 17 DB, 15 WB
Conditions	[4]Heating at 5°F (Indoor // Outdoor)	°F	70 DB, 60 WB // 5 DB, 4 WB

*Indoor/Outdoor Unit Operating Temperature Range (Cooling Air Temp [Maximum / Minimum]):
- Applications should be restricted to comfort cooling only; equipment cooling applications are not recommended for low ambient temperature conditions.

**Outdoor Unit Operating Temperature Range (Cooling Thermal Lock-out / Re-start Temperatures; Heating Thermal Lock-out / Re-start Temperatures):
- System cuts out in heating mode to avoid thermistor error and automatically restarts at these temperatures.

Specifications are subject to change without notice.

© 2023 Mitsubishi Electric Trane HVAC US LLC. All rights reserved.

SPECIFICATIONS: NTXAMT18A112AA & NTXSKH18A112AA

Outdoor Unit	MCA	A	17.0
	MOCP	A	31
	Fan Motor Full Load Amperage	A	1
	Fan Motor Output	W	60
	Airflow Rate [Cooling / Heating]	CFM	2,020 / 1,930
	Refrigerant Control		LEV
	Defrost Method		Reverse Cycle
	Coating on Heat Exchanger		Blue Fin Coating
	Sound Pressure Level, Cooling[1]	dB(A)	55
	Sound Pressure Level, Heating[2]	dB(A)	55
	Compressor Type		DC INVERTER-driven Twin Rotary
	Compressor Model		SNB220FQGMT
	Compressor Rated Load Amps	A	13
	Compressor Locked Rotor Amps	A	16.0
	Compressor Oil [Type // Charge]	oz.	FV50S // 23.7
	External Finish Color		Ivory Munsell 3Y 7.8/1.1
	Base Pan Heater		Built-in
	Unit Dimensions	W x D x H: In. [mm]	33-1/16 x 13 x 34-5/8 [840 x 330 x 880]
	Package Dimensions	W x D x H: In. [mm]	38-3/4 x 16-3/4 x 39 [980 x 420 x 990]
	Unit Weight	Lbs. [kg]	131 [59.5]
	Package Weight	Lbs. [kg]	150 [68]
Outdoor Unit Operating Temperature Range	Cooling Air Temp [Maximum / Minimum]*	°F	115 DB / 14 DB
	Cooling Thermal Lock-out / Re-start Temperatures**	°F	-1 / 3
	Heating Air Temp [Maximum / Minimum]	°F	75 DB, 65 WB / -13 DB, -14 WB
	Heating Thermal Lock-out / Re-start Temperatures**	°F	-25 / -14
Refrigerant	Type		R410A
	Maximum Charge Quantity	Lbs, oz	3.0, 12.0
	Initial Charge Quantity	Ft. [m]	100.0 [30.0]
	Additional Refrigerant Charge Per Additional Piping Length	oz./Ft. [g/m]	0 [0]
Piping	Gas Pipe Size O.D. [Flared]	In.[mm]	1/2 [12.7]
	Liquid Pipe Size O.D. [Flared]	In.[mm]	1/4 [6.35]
	Maximum Piping Length	Ft. [m]	100 [30]
	Maximum Height Difference	Ft. [m]	50 [15]
	Maximum Number of Bends		10

NOTES:

AHRI Rated Conditions (Rated data is determined at a fixed compressor speed)	[1]Cooling (Indoor // Outdoor)	°F	80 DB, 67 WB // 95 DB, 75 WB
	[2]Heating at 47°F (Indoor // Outdoor)	°F	70 DB, 60 WB // 47 DB, 43 WB
	[3]Heating at 17°F (Indoor // Outdoor)	°F	70 DB, 60 WB // 17 DB, 15 WB
Conditions	[4]Heating at 5°F (Indoor // Outdoor)	°F	70 DB, 60 WB // 5 DB, 4 WB

*Indoor/Outdoor Unit Operating Temperature Range (Cooling Air Temp [Maximum / Minimum]):
- Applications should be restricted to comfort cooling only; equipment cooling applications are not recommended for low ambient temperature conditions.

**Outdoor Unit Operating Temperature Range (Cooling Thermal Lock-out / Re-start Temperatures; Heating Thermal Lock-out / Re-start Temperatures):
- System cuts out in heating mode to avoid thermistor error and automatically restarts at these temperatures.

Specifications are subject to change without notice.

© 2023 Mitsubishi Electric Trane HVAC US LLC. All rights reserved.

INDOOR UNIT ACCESSORIES: NTXAMT18A112AA

Control Interface	Airzone ZBS Wired Blueface Principal Controller White	AZZBSBLUEFACECB
	Airzone ZBS Wired Blueface Principal Controller White	AZZBSBLUEZEROCB
	Airzone ZBS Wired Lite Controller White	AZZBSLITECB
	Airzone ZBS Wireless Lite Controller White	AZZBSLITERB
	Airzone ZBS Wireless Think Controller White	AZZBSTHINKRB
	BACnet® and Modbus® Interface	PAC-UKPRC001-CN-1
	CN24 Relay Kit	CN24RELAY-KIT-CM3
	Connector cable for remote display	PAC-SA88HA-EP
	IT Extender	PAC-WHS01IE-E
	kumo station® for kumo cloud®	TAC-WHS01HC-E
	Remote Operation Adapter‡	PAC-SF40RM-E
	Thermostat Interface	PAC-US445CN-1
	USNAP Adapter	PAC-WHS01UP-E
	Wireless Interface for kumo cloud®	PAC-USWHS002-WF-2
Remote Sensor	Flush Mount Remote Temperature Sensor	PAC-USSEN002-FM-1
	Flush Mount Temperature Sensor	PAC-USSEN001-FM-1
	Remote Temperature Sensor	PAC-SE41TS-E
	Wireless temperature and humitity sensor for kumo cloud®	PAC-USWHS003-TH-1
Wired Remote Controller	Deluxe Wired MA Remote Controller†	TAR-40MAAU
	Simple MA Remote Controller†	TAC-YT53CRAU-J
	Touch MA Controller†	TAR-CT01MAU-SB
Wireless Remote Controller	kumo touch™ RedLINK™ Wireless Controller	MHK2
	Wireless MA Receiver	PAR-SR32MA-E
	Wireless MA Remote Controller	TAR-FL32MA-E
Condensate	Blue Diamond (Advanced) Mini Condensate Pump w/ Reservoir & Sensor (208/230V) [recommended]	X87-721
	Blue Diamond (MicroBlue) Mini Condensate Pump (110/208/230V) up to 18,000 BTU/H	X86-003
	Blue Diamond Sensor Extension Cable — 15 Ft.	C13-103
	Refco Condensate Pump (100-240 VAC) up to 120,000 BTU/H	COMBI
Control Wire	20/2PR, 1PR shielded + 1PR plenum wire for Airzone, 100 ft reel	CW2042S2-100
	20/2PR, shielded + 1PR plenum wire for Airzone, 500 ft reel	CW2042S2-500
Disconnect Switch	(30A/600V/UL) [fits 2” X 4” utility box] - Black	TAZ-MS303
	(30A/600V/UL) [fits 2” X 4” utility box] - White	TAZ-MS303W
Downflow Kit	Downflow Kit	DFK-S
Electric Heat Lockout	Electric Heat Lockout	ETC-211020-MIT
Electric Kit Heats	3kW Electric Heater	EH03-SVZ-S
	5kW Electric Heater	EH05-SVZ-S
	8kW Electric Heater	EH08-SVZ-S
Lineset	100’ x 1/4” x 100’ / 1/2” Lineset (Twin-Tube Insulation)	MLS141212T-100
	15’ x 1/4” x 15’ / 1/2” Lineset (Twin-Tube Insulation)	MLS141212T-15
	30’ x 1/4” x 30’ / 1/2” Lineset (Twin-Tube Insulation)	MLS141212T-30
	50’ x 1/4” x 50’ / 1/2” Lineset (Twin-Tube Insulation)	MLS141212T-50
	65’ x 1/4” x 65’ / 1/2” Lineset (Twin-Tube Insulation)	MLS141212T-65
Terminal Block	Separate Terminal Power Block	SPTB1

NOTES:
‡PAC-SF40RM-E (Unable to use with wireless remote controller)

© 2023 Mitsubishi Electric Trane HVAC US LLC. All rights reserved.

OUTDOOR UNIT ACCESSORIES: NTXSKH18A112AA

Air Outlet Guide	Air Outlet Guide	MAC-886SG-E
Control/Service Tool	M- & P-Series Maintenance Tool Cable Set	M21EC0397
Mini-Split Wire	14 Gauge, 4 wire MiniSplit Cable—250 ft. roll	S144-250
	14 Gauge, 4 wire MiniSplit Cable—250 ft. roll	SW144-250
	14 Gauge, 4 wire MiniSplit Cable—50 ft. roll	S144-50
	14 Gauge, 4 wire MiniSplit Cable—50 ft. roll	SW144-50
	16 Gauge, 4 wire MiniSplit Cable—250 ft. roll	S164-250
	16 Gauge, 4 wire MiniSplit Cable—250 ft. roll	SW164-250
	16 Gauge, 4 wire MiniSplit Cable—50 ft. roll	S164-50
	16 Gauge, 4 wire MiniSplit Cable—50 ft. roll	SW164-50
Mounting Pad	Condensing Unit Mounting Pad: 16” x 36” x 3”	ULTRILITE1
Optional Defrost Heater	Base Heater	MAC-642BH-U1
Stand	18” Single Fan Stand	QSMS1801M
	24” Single Fan Stand	QSMS2401M
	Condenser Wall Bracket	QSWB2000M-1
	Outdoor Unit Stand — 12” High	QSMS1201M

Specifications are subject to change without notice.

© 2023 Mitsubishi Electric Trane HVAC US LLC. All rights reserved.

INDOOR UNIT DIMENSIONS: NTXAMT18A112AA

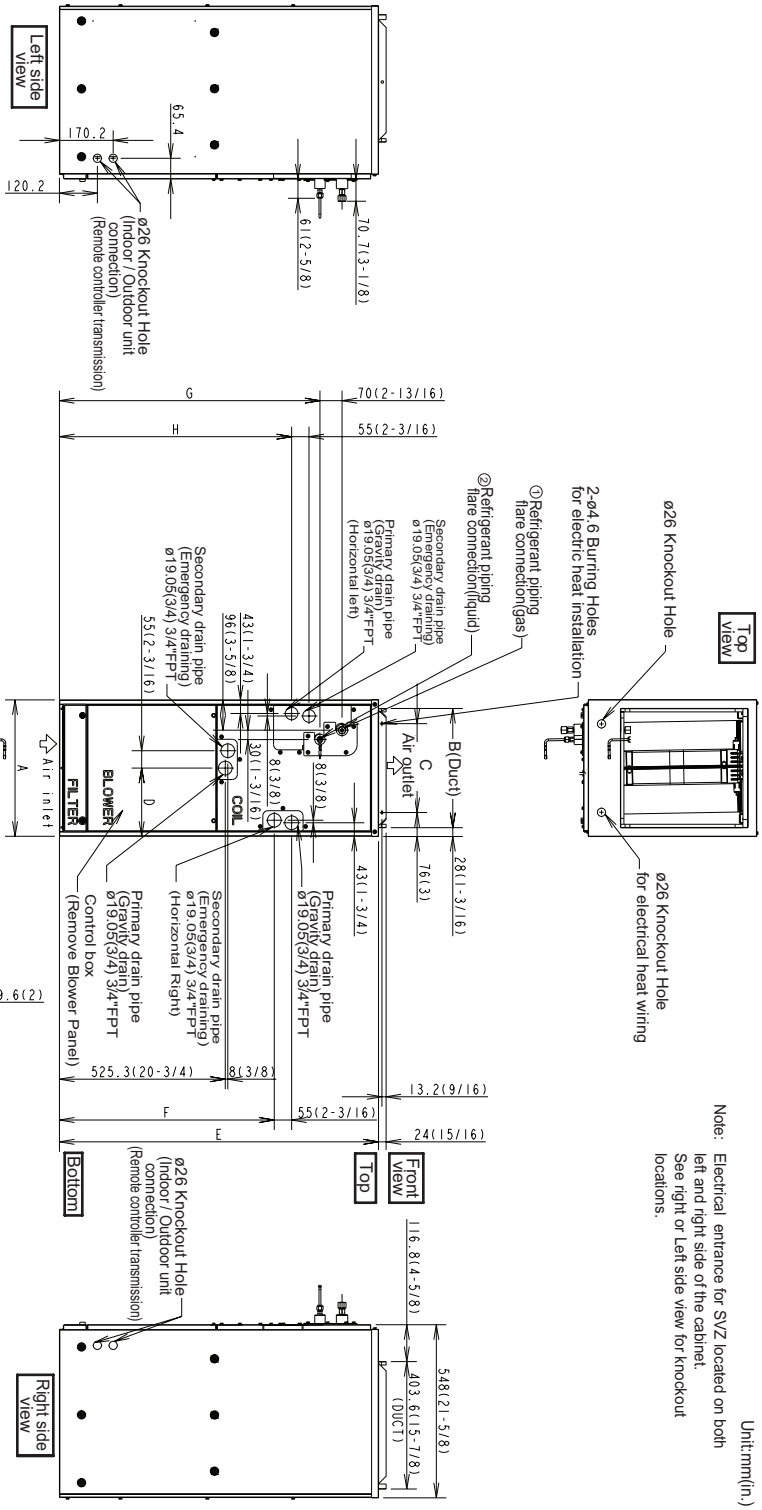

Unit:mm(in.)

Model	Nominal Filter Size	Duct Connection
NTXAMT12A112A*	508 x 406.4 x 25.4 (20 x 16 x 1)	376 x 402 (14-13/16 x 15-7/8)
NTXAMT18A112A*		
NTXAMT24A112A*		
NTXAMT30A112A*	508 x 508 x 25.4 (20 x 20 x 1)	477 x 402 (18-13/16 x 15-7/8)
NTXAMT36A112A*		

Model	A	B	C	D	E	F	G	H	J	Gas Pipe	Liquid pipe
NTXAMT12A112A*	432 (17)	376 (14-13/16)	281 (11-1/8)	224 (8-7/8)	1,010.8 (39-13/16)	680 (26-13/16)	823 (32-7/16)	735.5 (29)	360 (14-3/16)	ø 9.52 (3/8)	ø 6.35 (1/4)
NTXAMT18A112A*										ø 12.7 (1/2)	
NTXAMT24A112A*											
NTXAMT30A112A*	534 (21)	477 (18-13/16)	382.6 (15-1/8)	266.5 (10-1/2)	1,113.8 (43-7/8)	737 (29-1/16)	953.5 (37-9/16)	792 (31-3/16)	461 (18-3/16)	ø 15.88 (5/8)	ø 9.52 (3/8)
NTXAMT36A112A*											

© 2023 Mitsubishi Electric Trane HVAC US LLC. All rights reserved.

OUTDOOR UNIT DIMENSIONS: NTXSKH18A112AA

Unit: inch

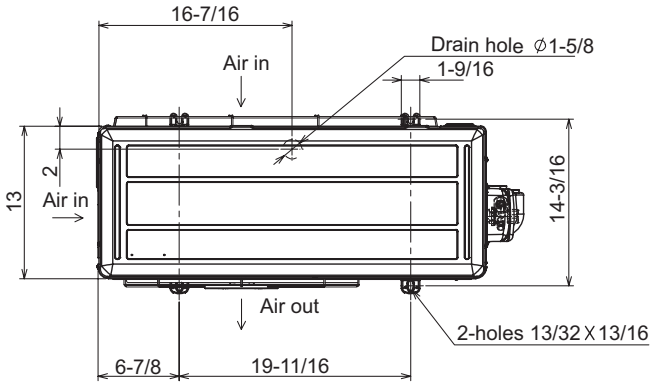

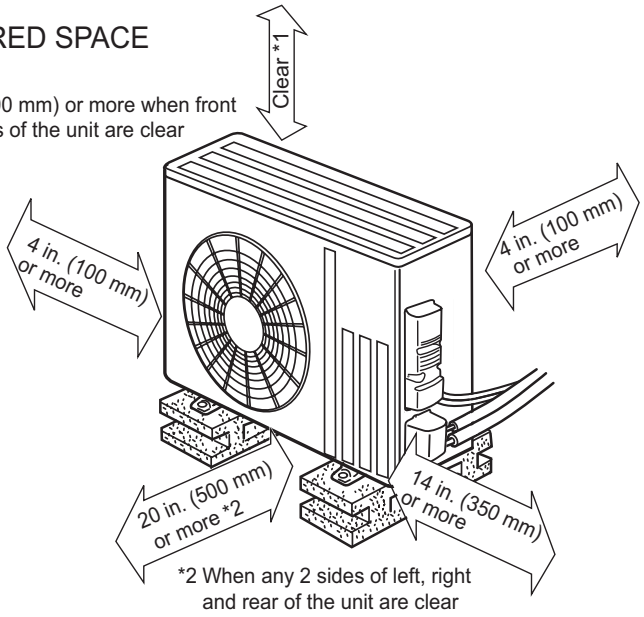

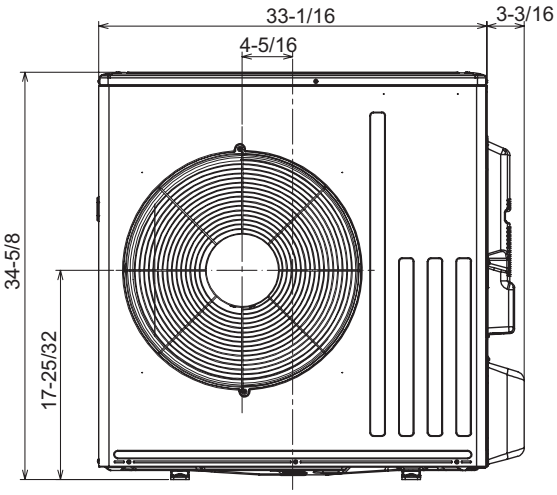

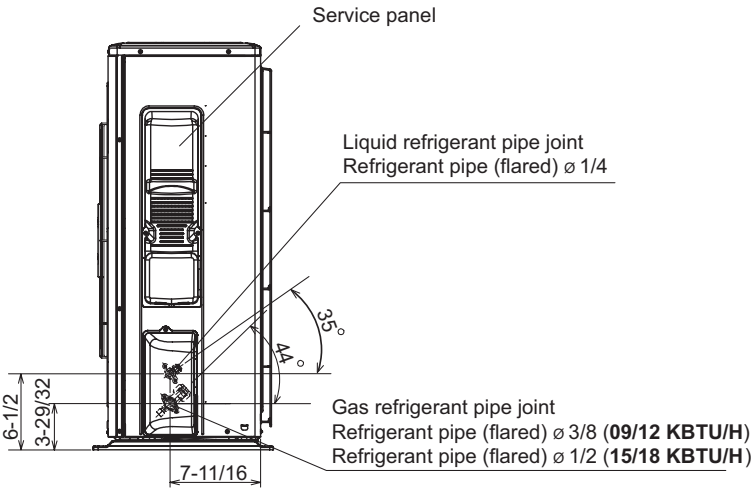

FORM# NTXAMT18A112AA & NTXSKH18A112AA - 202303

Specifications are subject to change without notice.

© 2023 Mitsubishi Electric Trane HVAC US LLC. All rights reserved.