MITSUBISHI ELECTRIC TRANE HVAC US

SPLIT-TYPE AIR CONDITIONERS

Revision A:
- 9-7. TEST POINT DIAGRAM AND VOLTAGE has been modified.

OBHT872 is void.

INDOOR UNIT

No. OBHT872
REVISED EDITION-A

SERVICE MANUAL

Models

NTXWPH06B112AA
NTXWPH09B112AA
NTXWPH12B112AA
NTXWPH15B112AA
NTXWPH18B112AA

Outdoor unit service manual
NTXSPB/SPH·B112AA Series (OBHT873)
NTXMMX/MPH·A122AA Series (OBHT702)

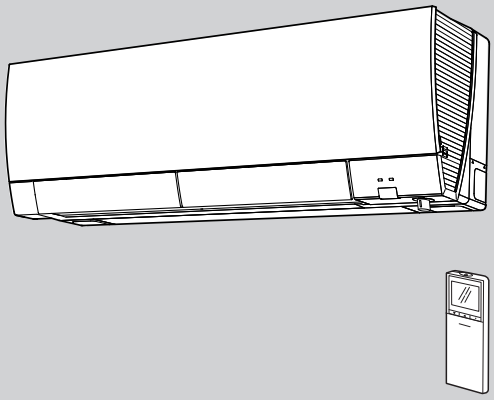

CONTENTS

1. TECHNICAL CHANGES ····· 3
2. PART NAMES AND FUNCTIONS ····· 4
3. SPECIFICATION ····· 5
4. OUTLINES AND DIMENSIONS ····· 6
5. WIRING DIAGRAM ····· 7
6. REFRIGERANT SYSTEM DIAGRAM ····· 8
7. SERVICE FUNCTIONS ····· 9
8. MICROPROCESSOR CONTROL ····· 11
9. TROUBLESHOOTING ····· 20
10. DISASSEMBLY INSTRUCTIONS ····· 33

PARTS CATALOG (OBBT872)

Use the specified refrigerant only

Never use any refrigerant other than that specified.

Doing so may cause a burst, an explosion, or fire when the unit is being used, serviced, or disposed of.
Correct refrigerant is specified in the manuals and on the spec labels provided with our products.
We will not be held responsible for mechanical failure, system malfunction, unit breakdown or accidents caused by failure to follow the instructions.

<Preparation before the repair service>

- Prepare the proper tools.
- Prepare the proper protectors.
- Provide adequate ventilation.
- After stopping the operation of the air conditioner, turn off the power-supply breaker and pull the power plug.
- Discharge the capacitor before the work involving the electric parts.

<Precautions during the repair service>

- Do not perform the work involving the electric parts with wet hands.
- Do not pour water into the electric parts.
- Do not touch the refrigerant.
- Do not touch the hot or cold areas in the refrigeration cycle.
- When the repair or the inspection of the circuit needs to be done without turning off the power, exercise great caution not to touch the live parts.

⚠ WARNING

- **When the refrigeration circuit has a leak, do not execute pump down with the compressor.**
- **When pumping down the refrigerant, stop the compressor before disconnecting the refrigerant pipes. The compressor may burst if air etc. get into it.**
- **When opening or closing the valve below freezing temperatures, refrigerant may spurt out from the gap between the valve stem and the valve body, resulting in injuries.**

Revision A:

• 9-7. TEST POINT DIAGRAM AND VOLTAGE has been modified.

1 TECHNICAL CHANGES

NTXWPH06B112AA
NTXWPH09B112AA
NTXWPH12B112AA
NTXWPH15B112AA
NTXWPH18B112AA

1. New model

2 PART NAMES AND FUNCTIONS

NTXWPH06B112AA NTXWPH09B112AA NTXWPH12B112AA NTXWPH15B112AA NTXWPH18B112AA

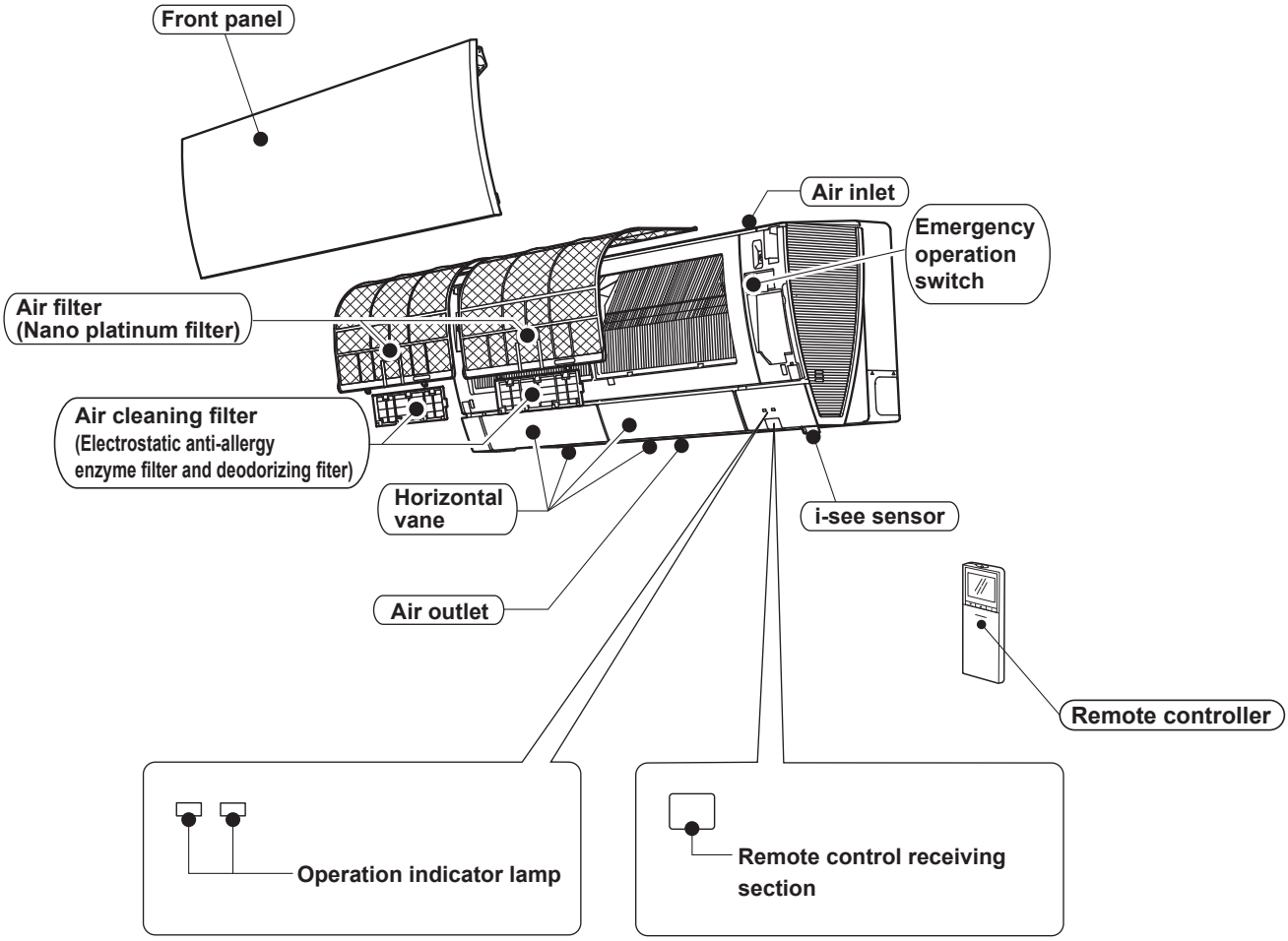

ACCESSORIES

	Model	NTXWPH06B112AA NTXWPH09B112AA NTXWPH12B112AA NTXWPH15B112AA NTXWPH18B112AA
①	Installation plate	1
②	Attachment screws for the installation plate 4 × 25 mm	5
③	Remote controller holder	1
④	Screw for the remote controller holder 3.5 × 16 mm (Black)	2
⑤	Battery (AAA) for the remote controller	2
⑥	Wireless remote controller	1
⑦	Felt tape (For left or left-rear piping)	1
⑧	Air cleaning filter (Electrostatic anti-allergy enzyme filter)	1
	Air cleaning filter (Deodorizing filter)	1

3 SPECIFICATION

Indoor unit model			NTXWPH06B112AA	NTXWPH09B112AA	NTXWPH12B112AA	NTXWPH15B112AA	NTXWPH18B112AA
Power supply	V, phase, Hz		208/230 , 1 , 60				
Disconnect switch		A	15				
Min. circuit ampacity		A	1.0				
Fan motor		F.L.A	0.65				
Airflow Super high - High - Med. - Low - Quiet	COOL Dry (Wet)	CFM	381- 304 - 221 - 167 - 137 (328 - 261 - 190 - 143 - 117)	381- 304 - 221 - 167 - 137 (328 - 261 - 190 - 143 - 117)	424 - 304 - 221 - 167 - 137 (364- 261 - 190 - 143 - 117)	437 - 355 - 304 - 262 - 225 (376 - 305 - 261 - 225 - 194)	437 - 355 - 304 - 262 - 225 (376 - 305 - 261 - 225 - 194)
	HEAT Dry	CFM	437 - 381 - 225 - 167 - 140	437 - 381 - 225 - 167 - 140	454 - 367 - 282 - 226 - 155	514 - 410 - 350 - 272 - 201	514 - 410 - 350 - 272 - 201
Moisture removal		pt./h	0.2	0.6	1.9	4.0	5.1
Sound level Super high - High - Med. - Low - Quiet	Cooling	dB(A)	40 - 36 - 29 - 23 - 20	40 - 36 - 29 - 23 - 20	44 - 36 - 29 - 24 - 21	44 - 39 - 35 - 31 - 27	44 - 39 - 35 - 31 - 27
	Heating	dB(A)	42 - 39 - 29 - 24 - 20	42 - 39 - 29 - 24 - 20	43 - 38 - 32 - 28 - 21	46 - 40 - 37 - 31 - 25	46 - 40 - 37 - 31 - 25
Cond. drain connection O.D.		in.	5/8				
Dimensions	W	in.	36-7/16				
	D		9-3/16				
	H		12 (+ 11/16)				
Weight		lb.	29				
External finish			Munsell 1.0Y 9.2/0.2				
Remote controller			Wireless type				
Control voltage (by built-in transformer)			12 - 24 V DC				

NOTE: Test conditions are based on AHRI 210/240.

3-1. OPERATING RANGE

(1) POWER SUPPLY

	Rated voltage	Guaranteed voltage (V)
Indoor unit	208/230 V 1 phase 60 Hz	Min. 187 — 208 — 230 — Max. 253

(2) OPERATION

Mode	Condition	Intake air temperature (°F)			
		Indoor		Outdoor	
		DB	WB	DB	WB
Cooling	Standard temperature	80	67	95	—
	Maximum temperature	90	73	115	—
	Minimum temperature	67	57	14	—
	Maximum humidity	78%		—	
Heating	Standard temperature	70	60	47	43
	Maximum temperature	80	67	75	65
	Minimum temperature	70	60	-13	-14

3-2. OUTLET AIR SPEED AND COVERAGE

Model	Mode	Function	Airflow (CFM)	Air speed (ft./s)	Coverage (ft.)
NTXWPH06B112AA	HEAT	Dry	437	19.5	29.8
	COOL	Dry	381	17.0	26.1
		Wet	328	14.6	22.5
NTXWPH09B112AA	HEAT	Dry	437	19.5	29.8
	COOL	Dry	381	17.0	26.1
		Wet	328	14.6	22.5
NTXWPH12B112AA	HEAT	Dry	454	20.3	31.0
	COOL	Dry	424	19.0	29.0
		Wet	364	16.2	24.8
NTXWPH15B112AA	HEAT	Dry	514	23.0	34.9
	COOL	Dry	437	19.5	29.8
		Wet	376	16.7	25.6
NTXWPH18B112AA	HEAT	Dry	514	23.0	34.9
	COOL	Dry	437	19.5	29.8
		Wet	376	16.7	25.6

- The air coverage is the figure up to the position where the air speed is 1 ft./s,
  when air is blown out horizontally from the unit properly at the High speed position.
  The coverage should be used only as a general guideline since it varies according to the size of the room and furniture arranged inside the room.

4 OUTLINES AND DIMENSIONS

NTXWPH06B112AA NTXWPH09B112AA NTXWPH12B112AA NTXWPH15B112AA NTXWPH18B112AA

Unit: inch

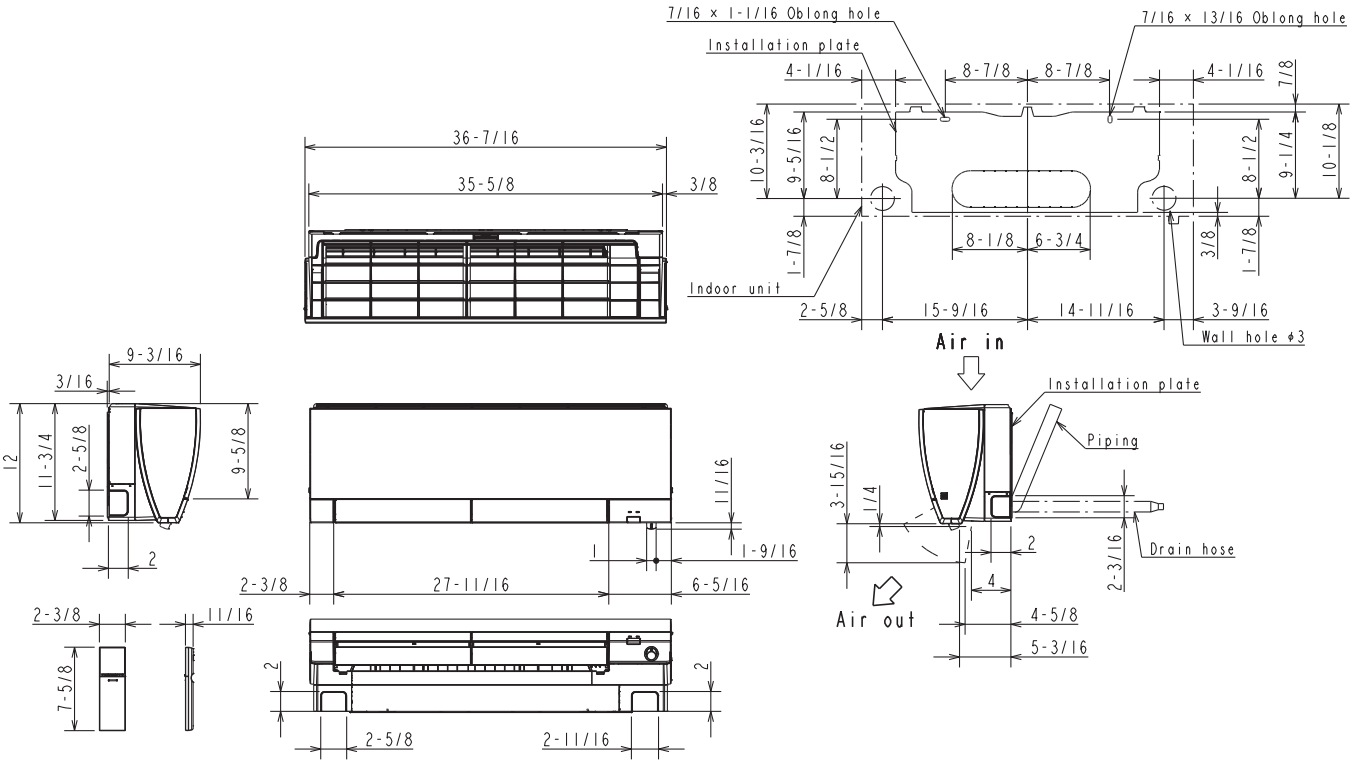

(NTXWPH06/09/12B112AA)

Piping	Insulation	ϕ1-7/16 O.D
	Liquid line	ϕ1/4 19-11/16 (Flared connection ϕ1/4)
	Gas line	ϕ3/8 16-15/16 (Flared connection ϕ3/8)
Drain hose		Insulation ϕ1-1/8 Connected part ϕ5/8 O.D

(NTXWPH15/18B112AA)

Piping	Insulation	ϕ1-7/16 O.D
	Liquid line	ϕ1/4 19-11/16 (Flared connection ϕ1/4)
	Gas line	ϕ3/8 16-15/16 (Flared connection ϕ1/2)
Drain hose		Insulation ϕ1-1/8 Connected part ϕ5/8 O.D

5 WIRING DIAGRAM

NTXWPH06B112AA NTXWPH09B112AA NTXWPH12B112AA NTXWPH15B112AA NTXWPH18B112AA

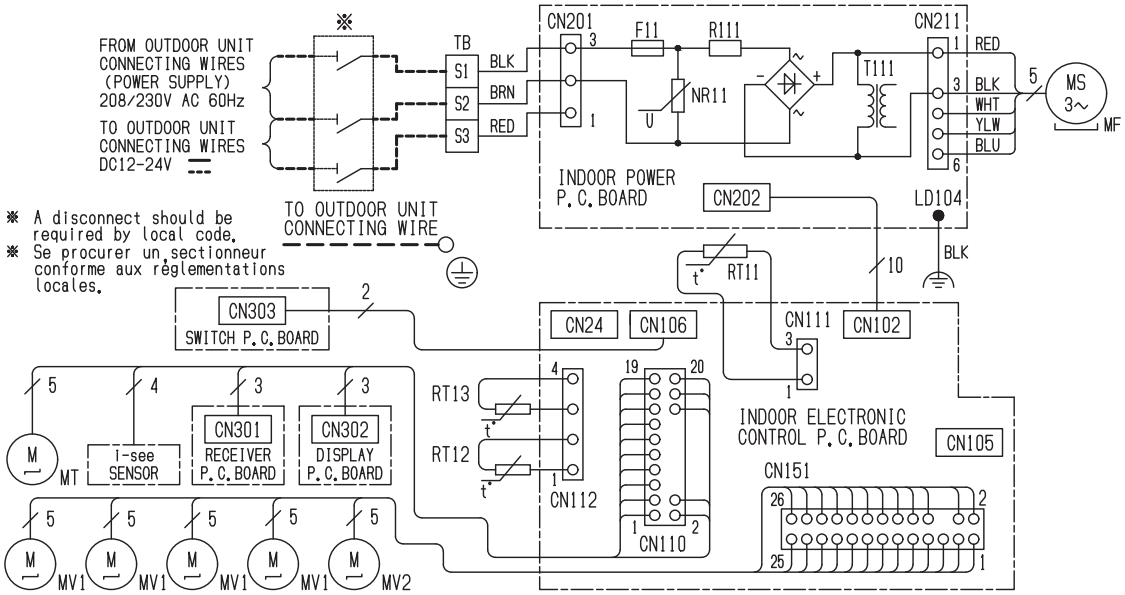

SYMBOL	NAME
F11	FUSE (T3.15AL250V)
MF	FAN MOTOR
MT	i-see SENSOR MOTOR
MV1	VANE MOTOR (HORIZONTAL)
MV2	VANE MOTOR (VERTICAL)
NR11	VARISTOR
R111	RESISTOR
RT11	ROOM TEMP. THERMISTOR
RT12	COIL TEMP. THERMISTOR (MAIN)
RT13	COIL TEMP. THERMISTOR (SUB)
T111	TRANSFORMER
TB	TERMINAL BLOCK

NOTES:
1. About the outdoor side electronic wiring refer to the outdoor unit electronic wiring diagram for servicing.
2. Use copper supply wire.
3. Symbols indicate. ▭▭▭▭ : Terminal block ▭○○○○ : Connector

REMARQUES:
1. Pour le câblage électronique côté extérieur, se reporter au schéma d'entretien du câblage électronique de l'appareil extérieur.
2. Utiliser des fils d'alimentation en cuivre.
3. Les symboles ont les significations suivantes ▭▭▭▭ : Borne ▭○○○○ : Connecteur

6 REFRIGERANT SYSTEM DIAGRAM

NTXWPH06B112AA NTXWPH09B112AA NTXWPH12B112AA

Unit: inch (mm)

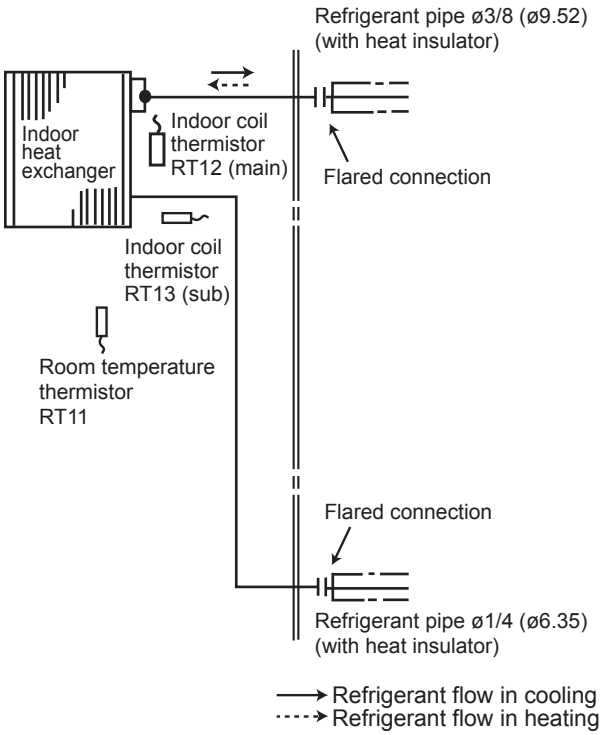

NTXWPH15B112AA NTXWPH18B112AA

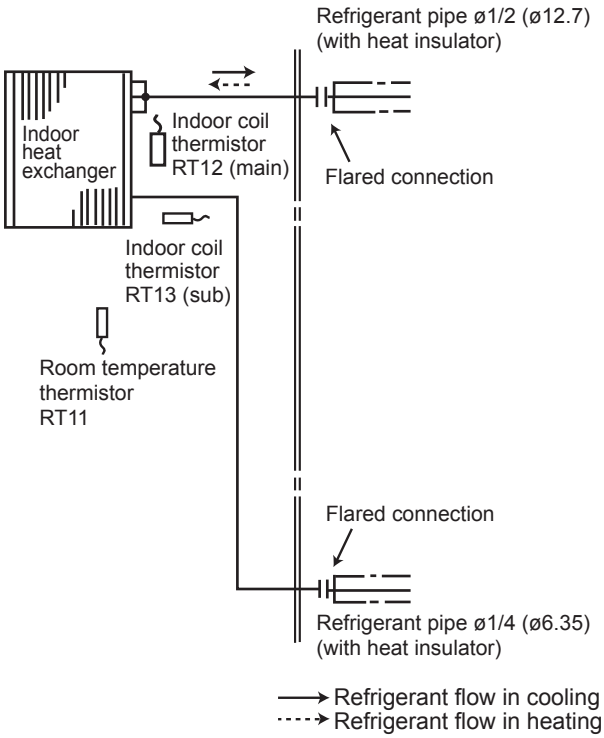

7 SERVICE FUNCTIONS

NTXWPH06B112AA NTXWPH09B112AA NTXWPH12B112AA NTXWPH15B112AA NTXWPH18B112AA

7-1. TIMER SHORT MODE

For service, the following set time can be shortened by bridging JPG and JPS on the electronic control P.C. board. (Refer to 9-7.)
Set time: 3 minutes → 3 seconds (It takes 3 minutes for the compressor to start operation. However, the starting time is shortened by bridging JPG and JPS.)

7-2. HOW TO SET REMOTE CONTROLLER EXCLUSIVELY FOR A PARTICULAR INDOOR UNIT

A maximum of 4 indoor units with wireless remote controllers can be used in a room.
To operate the indoor units individually with each remote controller, assign a number to each remote controller according to the number of the indoor unit.

This setting can be set only when all the following conditions are met:
- The remote controller is powered OFF.
- Weekly timer is not set.
- Weekly timer is not being edited.

(1) Hold down [1~4] button on the remote controller for 2 seconds to enter the pairing mode.
(2) Press [1~4] button again and assign a number to each remote controller.
Each press of [1~4] button advances the number in the following order: 1 → 2 → 3 → 4.
(3) Press [EDIT/SEND SET] button to complete the pairing setting.

After you turn the breaker ON, the remote controller that first sends a signal to an indoor unit will be regarded as the remote controller for the indoor unit.
Once they are set, the indoor unit will only receive the signal from the assigned remote controller afterwards.

7-3. SETTING THE INSTALLATION POSITION

Be sure to set the remote controller according to the installed position of the indoor unit.
Installation position:
Left: Distance to objects (wall, cabinet, etc.) is less than 50 cm to the left
Center: Distance to objects (wall, cabinet, etc.) is more than 50 cm to the left and right
Right: Distance to objects (wall, cabinet, etc.) is less than 50 cm to the right

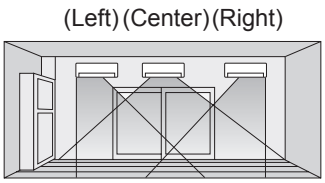

The installation position can be set only when all the following conditions are met:
- The remote controller is powered OFF.
- Weekly timer is not set.
- Weekly timer is not being edited.

(1) Hold down [WIDE VANE] button on the remote controller for 2 seconds to enter the position setting mode.
(2) Select the target installation position by pressing [WIDE VANE] button. (Each press of the [WIDE VANE] button displays the positions in order: center → right → left.)
(3) Press [EDIT/SEND SET] button to complete the position setting.

Installation position	Left	Center	Right
Remote controller display			

7-4. AUTO RESTART FUNCTION

When the indoor unit is controlled with the remote controller, the operation mode, the set temperature, and the fan speed are memorized by the indoor electronic control P.C. board. “AUTO RESTART FUNCTION” automatically starts operation in the same mode just before the shutoff of the main power.

Operation

① If the main power has been cut, the operation settings remain.
② After the power is restored, the unit restarts automatically according to the memory.
(However, it takes at least 3 minutes for the compressor to start running.)

How to disable “AUTO RESTART FUNCTION”

① Turn off the main power for the unit.
② Cut the jumper wire to JR77 on the indoor electronic control P.C. board. (Refer to 9-7.)

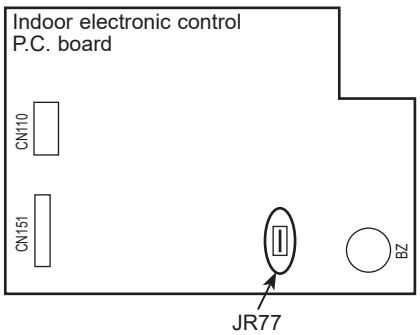

NOTE:

- The operation settings are memorized when 10 seconds have passed after the indoor unit was operated with the remote controller.
- If main power is turned OFF or a power failure occurs while AUTO START/STOP timer is active, the timer setting is cancelled.
- If the unit has been off with the remote controller before power failure, the auto restart function does not work as the power button of the remote controller is OFF.
- To prevent breaker OFF due to the rush of starting current, systematize other home appliance not to turn ON at the same time.
- When some air conditioners are connected to the same supply system, if they are operated before power failure, the starting current of all the compressors may flow simultaneously at restart.
  Therefore, the special counter-measures are required to prevent the main voltage-drop or the rush of the starting current by adding to the system that allows the units to start one by one.

8 MICROPROCESSOR CONTROL

NTXWPH06B112AA NTXWPH09B112AA NTXWPH12B112AA NTXWPH15B112AA NTXWPH18B112AA

WIRELESS REMOTE CONTROLLER

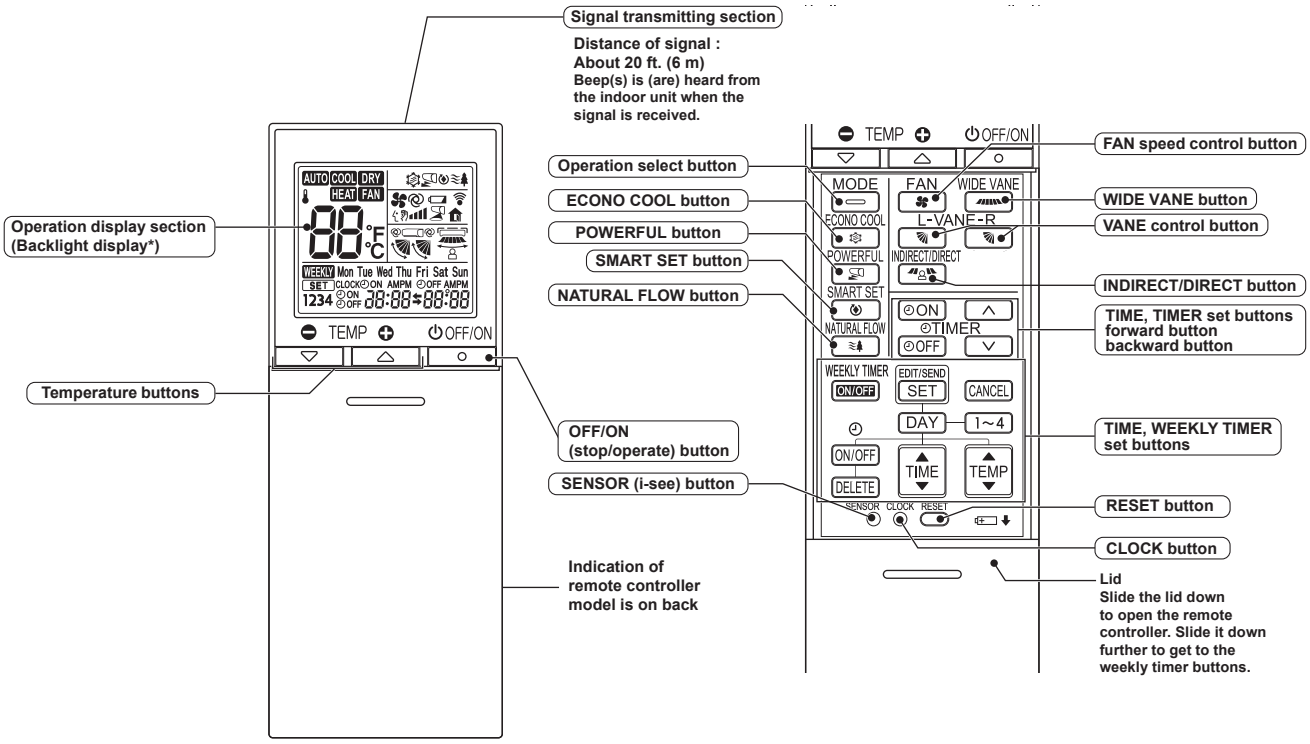

* The backlight turns on when using the remote controller.
The backlight goes off if the remote controller is not used for a while.

NOTE: Last setting will be stored after the unit is turned OFF with the remote controller. Indoor unit receives the signal of the remote controller with beeps.

INDOOR UNIT DISPLAY SECTION

Operation Indicator lamp

The operation indicator at the right side of the indoor unit indicates the operation state.

•The following indication applies regardless of shape of the indication.

Indication	Operation state	Room temperature
●/●	The unit is operating to reach the set temperature.	About 4°F (2°C) or more away from set temperature
●/○	The room temperature is approaching the set temperature.	About 2 to 4°F (1 to 2°C) from set temperature
●/◐	Standby mode (only during multisystem operation)	—

● Lit
◐ Blinking
○ Not lit

8-1. COOL (☼) OPERATION

(1) Press OFF/ON (stop/operate) button. OPERATION INDICATOR lamp of the indoor unit turns on with a beep tone.
(2) Select COOL mode with Operation select button.
(3) Press Temperature buttons TEMP ⊖ or ⊕ button to select the desired temperature.
The setting range is 61 - 88°F (16 - 31°C).

1. Coil frost prevention

The compressor operational frequency is controlled by the temperature of the indoor heat exchanger to prevent the coil from frosting.
When the temperature of indoor heat exchanger becomes too low, the coil frost prevention mode works.
The indoor fan operates at the set speed and the compressor stops. This mode continues until the temperature of indoor heat exchanger rises.

2. Low outside temperature operation

When the outside temperature is lower, low outside temperature operation starts, and the outdoor fan slows or stops.

8-2. DRY (△) OPERATION

(1) Press OFF/ON (stop/operate) button. OPERATION INDICATOR lamp of the indoor unit turns on with a beep tone.
(2) Select DRY mode with Operation select button.
(3) The set temperature is determined from the initial room temperature.

1. Coil frost prevention

Coil frost prevention works the same way as that in COOL mode. (8-1.1.)

2. Low outside temperature operation

Low outside temperature operation works the same way as that in COOL mode. (8-1.2.)

8-3. FAN (✿) OPERATION

(1) OPERATION INDICATOR lamp of the indoor unit turns on with a beep tone.
(2) Select FAN mode with Operation select button.
(3) Select the desired fan speed. When AUTO, it becomes Low.
Only indoor fan operates.
Outdoor unit does not operate.

8-4. HEAT (☼) OPERATION

(1) Press OFF/ON (stop/operate) button.
OPERATION INDICATOR lamp of the indoor unit turns on with a beep tone.
(2) Select HEAT mode with Operation select button.
(3) Press Temperature buttons TEMP ⊖ or ⊕ button to select the desired temperature.
The setting range is 61 - 88°F (16 - 31°C).

1. Cold air prevention control

When the compressor is not operating or is starting, and the temperature of indoor heat exchanger and/or the room temperature is low or when defrosting is being done, the indoor fan will stop or rotate in Very Low speed.

2. High pressure protection

The compressor operational frequency is controlled by the temperature of the indoor heat exchanger to prevent the condensing pressure from increasing excessively.
When the temperature of indoor heat exchanger becomes too high, the high pressure protection works.
The indoor fan operates following the cold air prevention control. This mode continues until the temperature of indoor heat exchanger falls.

3. Defrosting

Defrosting starts when the temperature of outdoor heat exchanger becomes too low.
The compressor stops once, the indoor/outdoor fans stop, the 4-way valve reverses, and the compressor re-starts.
This mode continues until the temperature of outdoor heat exchanger rises or the fixed time passes.

8-5. AUTO CHANGE OVER ··· AUTO MODE OPERATION

Once desired temperature is set, unit operation is switched automatically between COOL and HEAT operation.

Mode selection

(1) Initial mode
When unit starts the operation with AUTO operation from OFF:
- If the room temperature is higher than the set temperature, operation starts in COOL mode.
- If the room temperature is equal to or lower than the set temperature, operation starts in HEAT mode.

(2) Mode change
COOL mode changes to HEAT mode when about 15 minutes have passed with the room temperature 2°F (1°C) below the set temperature.
HEAT mode changes to COOL mode when about 15 minutes have passed with the room temperature 2°F (1°C) above the set temperature.

8-6. AUTO VANE OPERATION

1. Horizontal vane

(1) Vane motor drive

These models are equipped with a stepping motors for the horizontal vanes. The rotating direction, speed, and angle of the motor are controlled by pulse signals (approximately 12 V) transmitted from indoor microprocessor.

(2) The horizontal vane angle and mode change as follows by pressing VANE CONTROL (L-VANE-R) button.

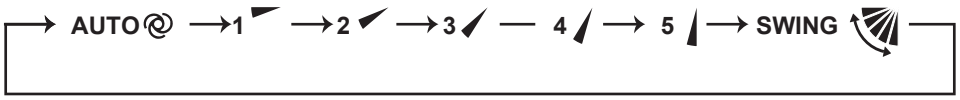

NOTE: The right and left horizontal vanes set to the same level may not align perfectly.

(3) Positioning

To confirm the standard position, the vane move until it touches the vane stopper. Then the vane is set to the selected angle.

Confirming of standard position is performed in the following cases:

(a) When the operation starts or finishes (including timer operation).

(b) When the test run starts.

(c) When standby mode (only during multi system operation) starts or finishes.

(4) VANE AUTO (@) mode

In VANE AUTO mode, the microprocessor automatically determines the vane angle to make the optimum room temperature distribution.

In COOL and DRY operation
Vane angle is fixed to Horizontal position.

In HEAT operation
Vane angle is fixed to Angle 4.

(5) STOP (operation OFF) and ON TIMER standby

In the following cases, the horizontal vane returns to the closed position.

(a) When OFF/ON (stop/operate) button is pressed (POWER OFF).

(b) When the operation is stopped by the emergency operation.

(c) When ON TIMER is ON standby.

(6) Dew prevention

During COOL or DRY operation with the vane angle at Angle 4 or 5 when the compressor cumulative operation time exceeds 1 hour, the vane angle automatically changes to Angle 3 for dew prevention.

(7) SWING (⁂) mode

By selecting SWING mode with VANE control button, the horizontal vanes swing vertically.

When COOL, DRY or FAN mode is selected, only the upper vane swings.

(8) Cold air prevention in HEAT operation

The horizontal vane position is set to upward.

NOTE: When 2 or more indoor units are operated with multi outdoor unit, even if any indoor unit turns thermostat off, this control does not work in the indoor unit.

(9) ECONO COOL (⁂) operation (ECONOmical operation)

When ECONO COOL button is pressed in COOL mode, set temperature is automatically set 4°F (2°C) higher by the microprocessor. However, the temperature on the LCD screen on the remote controller is not changed. Also the horizontal vane swings in various cycle.

SWING operation makes you feel cooler than set temperature. So, even though the set temperature is higher, the air conditioner can keep comfort. As a result, energy can be saved.

To cancel this operation, select a different mode or press one of the following buttons in ECONO COOL operation: ECONO COOL, VANE control, POWERFUL or NATURAL FLOW button.

(10) POWERFUL ( ) operation

The air conditioner automatically adjusts the fan speed and the set temperature, and operates the POWERFUL mode. The POWERFUL mode is cancelled automatically 15 minutes after operation starts, or when POWERFUL button is pressed once again within 15 minutes after operation starts. The operation mode returns to the mode prior to POWERFUL operation. POWERFUL mode also is cancelled, when the OFF/ON (stop/operate), ECONO COOL, FAN speed control, NATURAL FLOW or SMART SET button is pressed within 15 minutes after operation starts, or operation mode is changed.

2. Vertical vane

(1) Vane motor drive

These models are equipped with a stepping motor for the vertical vane. The rotating direction, speed, and angle of the motor are controlled by pulse signals (approximately 12 V) transmitted from microprocessor.

(2) The vertical vane angle and mode change as follows by pressing WIDE VANE button.

(3) Positioning

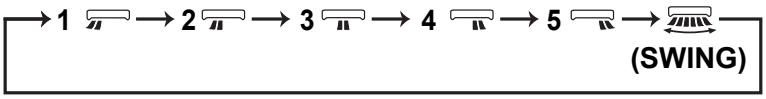

To confirm the standard position, the vane moves until it touches the vane stopper. Then the vane is set to the selected angle.

Confirming of standard position is performed in the following cases:

(a) OFF/ON (stop/operate) button is pressed (POWER ON).

(4) SWING ( ) MODE

By selecting SWING mode with WIDE VANE button, the vertical vane swings horizontally. The remote controller displays “ ”. Swing mode is cancelled when WIDE VANE button is pressed once again.

8-7. TIMER OPERATION

1. How to set the time

(1) Check that the current time is set correctly.

NOTE: Timer operation will not work without setting the current time. Initially “12:00 AM” blinks at the current time display of TIME MONITOR, so set the current time correctly with CLOCK button.

How to set the current time

(a) Press the CLOCK button.

(b) Press the TIME SET buttons (and) to set the current time.

- Each time forward button ( ) is pressed, the set time increases by 1 minute, and each time backward button ( ) is pressed, the set time decreases by 1 minute.
- Pressing those buttons longer, the set time increases/decreases by 10 minutes.

(c) Press the CLOCK set button.

(2) Press OFF/ON (stop/operate) button to start the air conditioner.

(3) Set the time of timer.

ON timer setting

(a) Press ON TIMER button(ON) during operation.

(b) Set the time of the timer using TIME SET buttons (and). *

OFF timer setting

(a) Press OFF TIMER button (OFF) during operation.

(b) Set the time of the timer using TIME SET buttons (and). *

* Each time forward button ( ) is pressed, the set time increases by 10 minutes: each time backward button ( ) is pressed, the set time decreases by 10 minutes.

2. To release the timer

To release ON timer, press ON TIMER button (ON).

To release OFF timer, press OFF TIMER button(OFF).

TIMER is cancelled and the display of set time disappears.

PROGRAM TIMER

- OFF timer and ON timer can be used in combination. The set time that is reached first will operate first.
- "➡" and "⬅" display shows the order of OFF timer and ON timer operation.

(Example 1) The current time is 8:00 PM.
The unit turns off at 11:00 PM, and on at 6:00 AM.

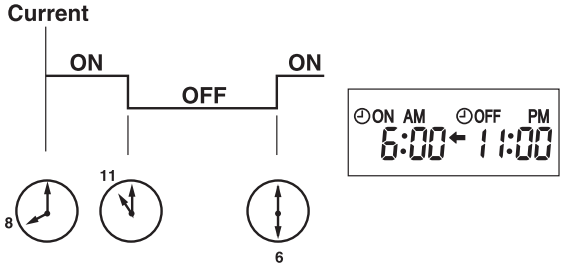

(Example 2) The current time is 11:00 AM.
The unit turns on at 5:00 PM, and off at 9:00 PM.

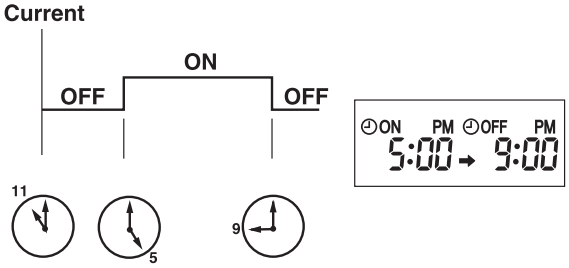

NOTE: If the main power is turned OFF or a power failure occurs while ON/OFF timer is active, the timer setting is cancelled. As these models are equipped with an auto restart function, the air conditioner starts operating with timer cancelled when power is restored.

8-8. WEEKLY TIMER OPERATION

- A maximum of 4 ON or OFF timers can be set for individual days of the week.
- A maximum of 28 ON or OFF timers can be set for a week.

E.g. : Runs at 75°F (24°C) from waking up to leaving home, and runs at 81°F (27°C) from getting home to going to bed on weekdays.
Runs at 81°F (27°C) from waking up late to going bed early on weekends.

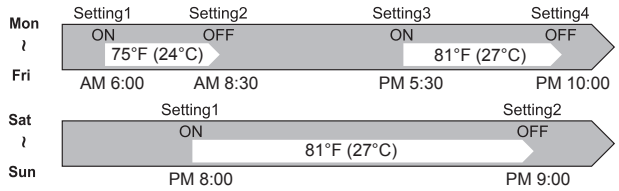

NOTE:
- The simple ON/OFF timer setting is available while the weekly timer is on. In this case, the ON/OFF timer has priority over the weekly timer; the weekly timer operation will start again after the simple ON/OFF timer is complete.
- When the weekly timer is set, temperature can not be set to 50°F (10°C).
- The weekly timer operation and SMART SET operation cannot be used together.

1. How to set the weekly timer

* Make sure that the current time and day are set correctly.

(1) Press [EDIT/SEND SET] button to enter the weekly timer setting mode.

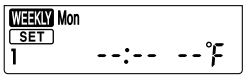

* [SET] blinks.

(2) Press [DAY] and [1~4] buttons to select setting day and number.

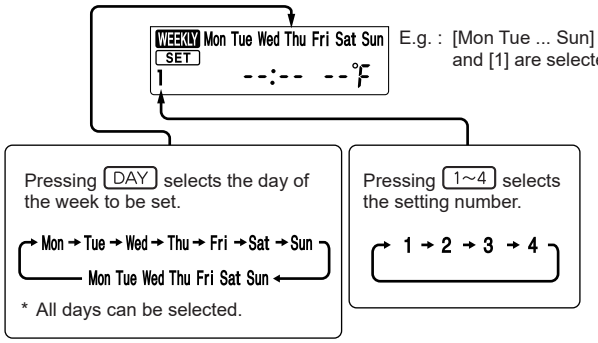

(3) Press [ON/OFF], [TIME], and [TEMP] buttons to set ON/OFF, time, and temperature.

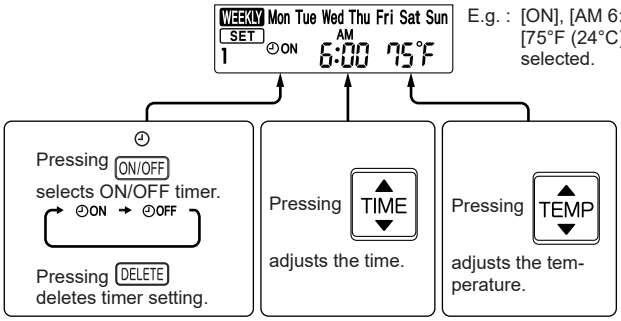

* Hold down the button to change the time quickly.
* The temperature can be set between 61°F and 88°F (16°C and 31°C) at weekly timer.

Press [DAY] and [1~4] buttons to continue setting the timer for other days and/or numbers.

(4) Press [EDIT/SEND SET] button to complete and transmit the weekly timer setting.

* [SET] which was blinking goes out, and the current time will be displayed.

NOTE:

- Press [EDIT/SEND SET] button to transmit the setting information of weekly timer to the indoor unit. Point the remote controller toward the indoor unit for 3 seconds.
- When setting the timer for more than one day of the week or one number, [EDIT/SEND SET] button does not have to be pressed per each setting. Press [EDIT/SEND SET] button once after all the settings are complete. All the weekly timer settings will be saved.
- Press [EDIT/SEND SET] button to enter the weekly timer setting mode, and press and hold [DELETE] button for 5 seconds to erase all weekly timer settings. Point the remote controller toward the indoor unit.

(5) Press WEEKLY TIMER ON/OFF button to turn the weekly timer ON. (WEEKLY lights.)

•When the weekly timer is ON, the day of the week whose timer setting is complete, will light.

Press WEEKLY TIMER ON/OFF button again to turn the weekly timer OFF. (WEEKLY goes out.)

NOTE:
The saved settings will not be cleared when the weekly timer is turned OFF.

2. Checking weekly timer setting

(1) Press EDIT/SEND SET button to enter the weekly timer setting mode.

*SET blinks.

(2) Press DAY or 1~4 buttons to view the setting of the particular day or number.

(3) Press CANCEL button to exit the weekly timer setting.

NOTE:
When all days of the week are selected to view the settings and a different setting is included among them, --:-- --°F will be displayed.

8-9. i-see CONTROL (⊡) MODE

In the i-see control mode, the room temperature is controlled based on the sensible temperature.

(1) Press SENSOR button with a fine-tipped object during COOL, DRY, HEAT and AUTO mode to activate i-see control mode (⊡). The default setting is “active”.

(2) Press SENSOR button again to activate ABSENCE DETECTION (⌂).

(3) Press SENSOR button again to release i-see control mode.

ABSENCE DETECTION (⌂)
This function automatically changes the operation to energy-saving operation when nobody is in the room.

(1) To activate this function, press SENSOR button until ⌂ appears on the operation display of the remote controller during the i-see control mode.

(2) Press SENSOR button again to release ABSENCE DETECTION.

NOTE:
Any person at the following places cannot be detected:
• Along the wall on which the air conditioner is installed
• Directly under the air conditioner
• Where any obstacle, such as furniture, is between the person and the air conditioner
A person may not be detected in the following situations:
• Room temperature is high.
• A person wears heavy clothes and his/her skin is not exposed.
• A heating element of which temperature changes significantly is present.
• Some heat sources, such as a small child or pet, may not be sensed.
• A heat source and the air conditioner are more than 20 ft. (6 m) apart.
• A heat source does not move for a long time.

8-10. INDIRECT/DIRECT MODE

The INDIRECT/DIRECT mode offers finely-tuned operation by locating where an occupant is in the room.

(1) Press INDIRECT/DIRECT button during COOL, DRY, HEAT or AUTO mode to activate INDIRECT/DIRECT mode.
This mode is only available when the i-see control mode is effective.

(2) Each press of INDIRECT/DIRECT button changes INDIRECT/DIRECT in the following order:

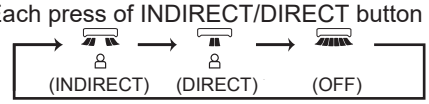

(INDIRECT): An occupant will be less exposed to direct airflow.

(DIRECT) : Mainly the vicinity of an occupant will be air-conditioned.

NOTE:

- Horizontal and vertical airflow directions will be automatically selected.
- If you still feel uncomfortable with the air direction determined by the INDIRECT mode, adjust the air direction manually.
- Cancelling the i-see control mode automatically cancels the INDIRECT/DIRECT mode.
  INDIRECT/DIRECT mode is also cancelled when the VANE control or WIDE VANE buttons is pressed.
- Do not touch the i-see sensor. This may cause malfunction of the i-see sensor.

8-11. NATURAL FLOW (≋) OPERATION

In NATURAL FLOW operation, air flow will become more like natural wind. An occupant will not be directly exposed to the air flow and feel more comfortable.

(1) Press NATURAL FLOW button during COOL or FAN mode to start NATURAL FLOW operation.

(2) Press NATURAL FLOW button again to cancel NATURAL FLOW operation.

- NATURAL FLOW operation is also cancelled when the POWERFUL or ECONO COOL button is pressed.

NOTE: As the fan speed changes constantly during NATURAL FLOW operation, the sound of air flow, wind velocity and air flow temperature also change. This is not a malfunction.

8-12. SMART SET (🔥) OPERATION

1. How to set SMART SET operation

(1) Press OFF/ON (stop/operate) button.
(2) Select COOL, HEAT or ECONO COOL mode.
(3) Press SMART SET button.
(4) Set the temperature, fan speed, and airflow direction for SMART SET operation.

NOTE:

- SMART SET operation cannot be selected during DRY or AUTO mode operation.
- The setting range of HEAT mode SMART SET operation is 50°F (10°C) and 61 - 88°F (16 - 31°C).
- 2 groups of setting can be saved. (One for COOL/ECONO COOL, one for HEAT)
- SMART SET operation and the weekly timer operation cannot be used together.

2. How to cancel operation

- Press SMART SET button again.
- SMART SET operation can also be cancelled by pressing Operation select button to change the operation mode.

The preferred setting can be saved for the next time with a single press of SMART SET button.

8-13. EMERGENCY/TEST OPERATION

In the case of test run operation or the emergency operation, use the emergency operation switch on the right side of the indoor unit. The emergency operation is available when the remote controller is missing or has failed, or when the batteries in the remote controller are running down. The unit will start and OPERATION INDICATOR lamp will light up.
The first 30 minutes of operation is the test run operation. This operation is for servicing. The indoor fan runs at High speed and the temperature control does not work.
After 30 minutes of test run operation, the system shifts to EMERGENCY COOL/HEAT MODE with a set temperature of 75°F (24°C). The fan speed shifts to Med.
The coil frost prevention works even in the test run or the emergency operation.
In the test run or the emergency operation, the horizontal vane operates in VANE AUTO (@) mode.
The emergency operation continues until the emergency operation switch is pressed once or twice or the unit receives any signal from the remote controller. In the latter case, normal operation will start.

NOTE: Do not press the emergency operation switch during normal operation.

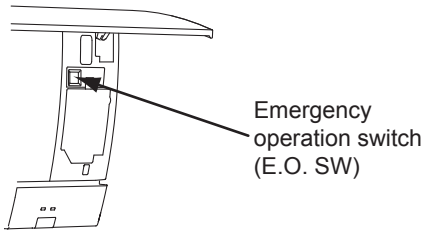

Operation mode	COOL/HEAT
Set temperature	75°F (24°C)
Fan speed	Med.
Horizontal vane	Auto

The operation mode is indicated by the Operation Indicator lamp as following

Operation Indicator lamp

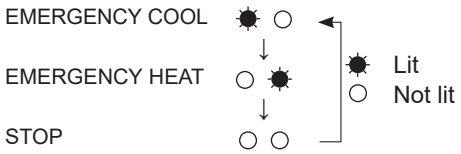

8-14. 3-MINUTE TIME DELAY OPERATION

When the system turns OFF, compressor will not restart for 3 minutes as 3-minute time delay function operates to protect compressor from overload.

8-15. Changing temperature indication (°F/°C)

- The preset unit is °F.
- °F → °C: Press RESET button while the Temperature buttons are pressed.
- °C → °F: Press RESET button or remove the batteries .

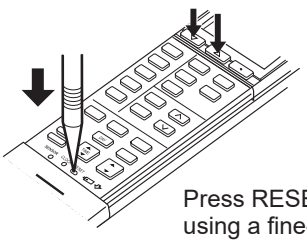

9 TROUBLESHOOTING

NTXWPH06B112AA NTXWPH09B112AA NTXWPH12B112AA NTXWPH15B112AA NTXWPH18B112AA

9-1. CAUTIONS ON TROUBLESHOOTING

1. Before troubleshooting, check the following

1) Check the power supply voltage.
2) Check the indoor/outdoor connecting wire for miswiring.

2. Take care of the following during servicing

1) Before servicing the air conditioner, be sure to turn OFF the main unit first with the remote controller, and then after confirming the horizontal vane is closed, turn OFF the breaker and/or disconnect the power plug.
2) Be sure to turn OFF the power supply before removing the front panel, the cabinet, the top panel, and the P.C. board.
3) When removing the P.C. board, hold the edge of the board with care NOT to apply stress on the components.
4) When connecting or disconnecting the connectors, hold the connector housing. DO NOT pull the lead wires.

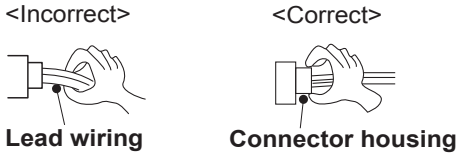

3. Troubleshooting procedure

1) Check if the OPERATION INDICATOR lamp on the indoor unit is blinking ON and OFF to indicate an abnormality. To make sure, check how many times the OPERATION INDICATOR lamp is blinking ON and OFF before starting service work.
2) Before servicing, verify that all connectors and terminals are connected properly.
3) When the electronic control P.C. board seems to be defective, check for disconnection of the copper foil pattern and burnt or discolored components.
4) When troubleshooting, Refer to 9-2, 9-3 and 9-4.

4. How to replace batteries

Weak batteries may cause the remote controller malfunction.
In this case, replace the batteries to operate the remote controller normally.

① Remove the front lid and insert batteries. Then reattach the front lid.

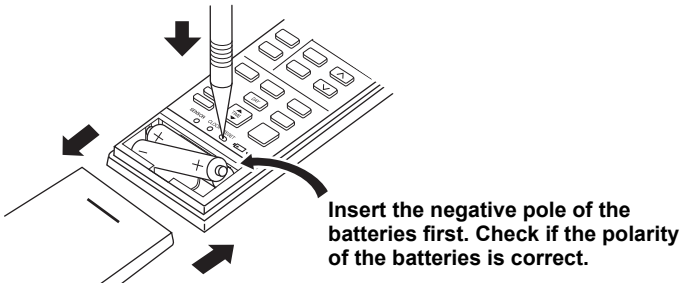

② Press RESET button with a fine-tipped object, and then use the remote controller.

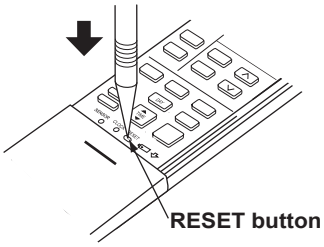

NOTE: 1. If RESET button is not pressed, the remote controller may not operate correctly.
2. This remote controller has a circuit to automatically reset the microcomputer when batteries are replaced. This function is equipped to prevent the microcomputer from malfunctioning due to the voltage drop caused by the battery replacement.
3. Do not use the leaking batteries.

9-2. FAILURE MODE RECALL FUNCTION

Outline of the function

This air conditioner can memorize the abnormal condition which has occurred once.

Even though LED indication listed on the troubleshooting check table (9-4.) disappears, the memorized failure details can be recalled.

1. Flow chart of failure mode recall function for the indoor/outdoor unit

Operational procedure

The cause of abnormality cannot be found because the abnormality does not recur.

Setting up the failure mode recall function

Turn ON the power supply.
<Preparation of the remote controller>
① While pressing both Operation select button and TEMP ⊕ button on the remote controller at the same time, press RESET button.
② First, release RESET button.
Hold down the other 2 buttons for another 3 seconds. Make sure that the indicators on the LCD screen shown in the right figure are all displayed. Then release the buttons.

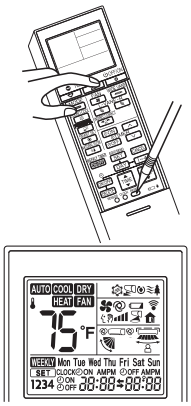

Press OFF/ON (stop/operate) button of the remote controller (the set temperature is displayed) with the remote controller headed towards the indoor unit. *1

*1 Regardless of normal or abnormal condition, a short beep is emitted once the signal is received.

Does the left lamp of the OPERATION INDICATOR lamp on the indoor unit blink at the interval of 0.5 seconds?
Blinks: Either indoor or outdoor unit is abnormal.
Beep is emitted at the same timing as the blinking of the left lamp of OPERATION INDICATOR lamp. *2

No (OFF) → Indoor unit is normal.
But the outdoor unit might be abnormal because there are some abnormalities that cannot be recalled with this way.
Check if outdoor unit is abnormal according to the detailed outdoor unit failure mode recall function.

NOTE: It takes up to 1 minute to indicate the outdoor unit abnormality. Even if the OPERATION INDICATOR lamp is not lit, keep checking at least 1 minute or longer.

Yes (Blinks)

Judgment of indoor/outdoor abnormality

Before blinking, does the left lamp of OPERATION INDICATOR lamp stay ON for 3 seconds?
When it stays ON for 3 seconds (without beep): The outdoor unit is abnormal.

Yes → The outdoor unit is abnormal.
Check the blinking pattern, and identify the abnormal point by referring to the table of outdoor unit failure mode recall function.
(Refer to outdoor unit service manual.)
Make sure to check at least 2 consecutive blinking cycles. *3

No → The indoor unit is abnormal.
Check the blinking pattern, and identify the abnormal point by referring to the table of indoor unit failure mode recall function. (Refer to 9-2.2)
Make sure to check at least 2 consecutive blinking cycles. *2

Releasing the failure mode recall function

Release the failure mode recall function by the following procedures.
Turn OFF the power supply and turn it ON again.
Press RESET button of the remote controller.

Repair the failure parts.

Deleting the memorized abnormal condition

① After repairing the unit, recall the failure mode again according to "Setting up the failure mode recall function" mentioned above.
② Press OFF/ON (stop/operate) button of the remote controller (the set temperature is displayed) with the remote controller headed towards the indoor unit.
③ Press the emergency operation switch so that the memorized abnormal condition is deleted.
④ Release the failure mode recall function according to "Releasing the failure mode recall function" mentioned above.

NOTE: 1. Make sure to release the failure mode recall function after it is set up, otherwise the unit cannot operate properly.
2. If the abnormal condition is not deleted from the memory, the last abnormal condition is kept memorized.

*2. Blinking pattern when the indoor unit is abnormal:

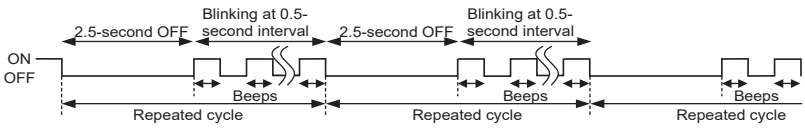

*3.Blinking pattern when the outdoor unit is abnormal:

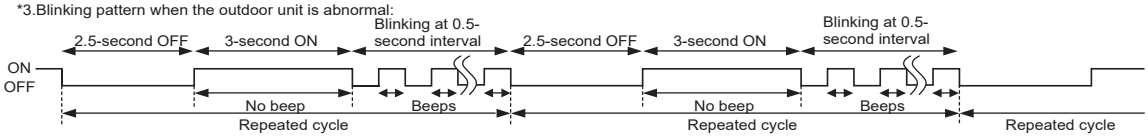

2. Table of indoor unit failure mode recall function

The left lamp of the OPERATION INDICATOR lamp	Abnormal point (Failure mode)	Condition	Remedy
Not lit	Normal	—	—
1-time blink every 0.5-second	Room temperature thermistor	The room temperature thermistor short or open circuit is detected every 8 seconds during operation.	Refer to the characteristics of the room temperature thermistor (9-7.).
2-time blink 2.5-second OFF	Indoor coil thermistor	The indoor coil thermistor short or open circuit is detected every 8 seconds during operation.	Refer to the characteristics of the main indoor coil thermistor, the sub indoor coil thermistor (9-7.).
3-time blink 2.5-second OFF	Serial signal	The serial signal from outdoor unit is not received for a maximum of 6 minutes.	Refer to 9-6.Ⓓ "How to check miswiring and serial signal error".
11-time blink 2.5-second OFF	Indoor fan motor	The rotational frequency feedback signal is not emitted for 12 seconds after the indoor fan motor is operated.	Refer to 9-6.Ⓐ "Check of indoor fan motor".
12-time blink 2.5-second OFF	Indoor control system	It cannot properly read data in the nonvolatile memory of the indoor electronic control P.C. board.	Replace the indoor electronic control P.C. board.

NOTE: Blinking patterns of this mode differ from the ones of TROUBLESHOOTING CHECK TABLE (9-4.).

3. Operation check on i-see sensor

While recalling the failure details, set the temperature to 66°F (19°C) to perform the simple check on the i-see sensor.
Place your hand over the i-see sensor, and the buzzer will beep at 1 second intervals. (Normal detection temperature range is 93 to 102°F (34 to 39°C).)
If the buzzer does not beep, check for disconnection of the connectors.
Set the temperature to 73°F (23°C) to exit the simple check mode on the i-see sensor.

The left lamp of the OPERATION INDICATOR lamp	Abnormal point (Failure mode)	Condition	Remedy
6-time blink	i-see sensor	Poor contact in i-see sensor wiring Failure in loading corrected data of i-see sensor	Check for disconnection of the connectors.

9-3. INSTRUCTION OF TROUBLESHOOTING

1. Check of the unit.

*1 "Test Run operation" means the operation within 30 minutes after the emergency operation switch is pressed.
If blinking of OPERATION INDICATOR lamp cannot be checked, it can be checked with failure mode recall function.

*2 There is possibility that diesel explosion may occur due to the air mixed in the refrigerant circuit.
First, ensure that there are no leakage points on the valves, flare connections, etc. that allow the air to flow into the refrigerant circuit, or no blockage points (e.g. clogged or closed valves) in the refrigerant circuit that cause an increase in pressure.
If there is no abnormal point like above and the system operates cooling and heating modes normally, the indoor thermistor might have a problem, resulting in false detection.
Check both the indoor coil thermistor and the room temperature thermistor, and replace faulty thermistor(s), if any.
NOTE: Do not start the operation again without repair to prevent hazards.

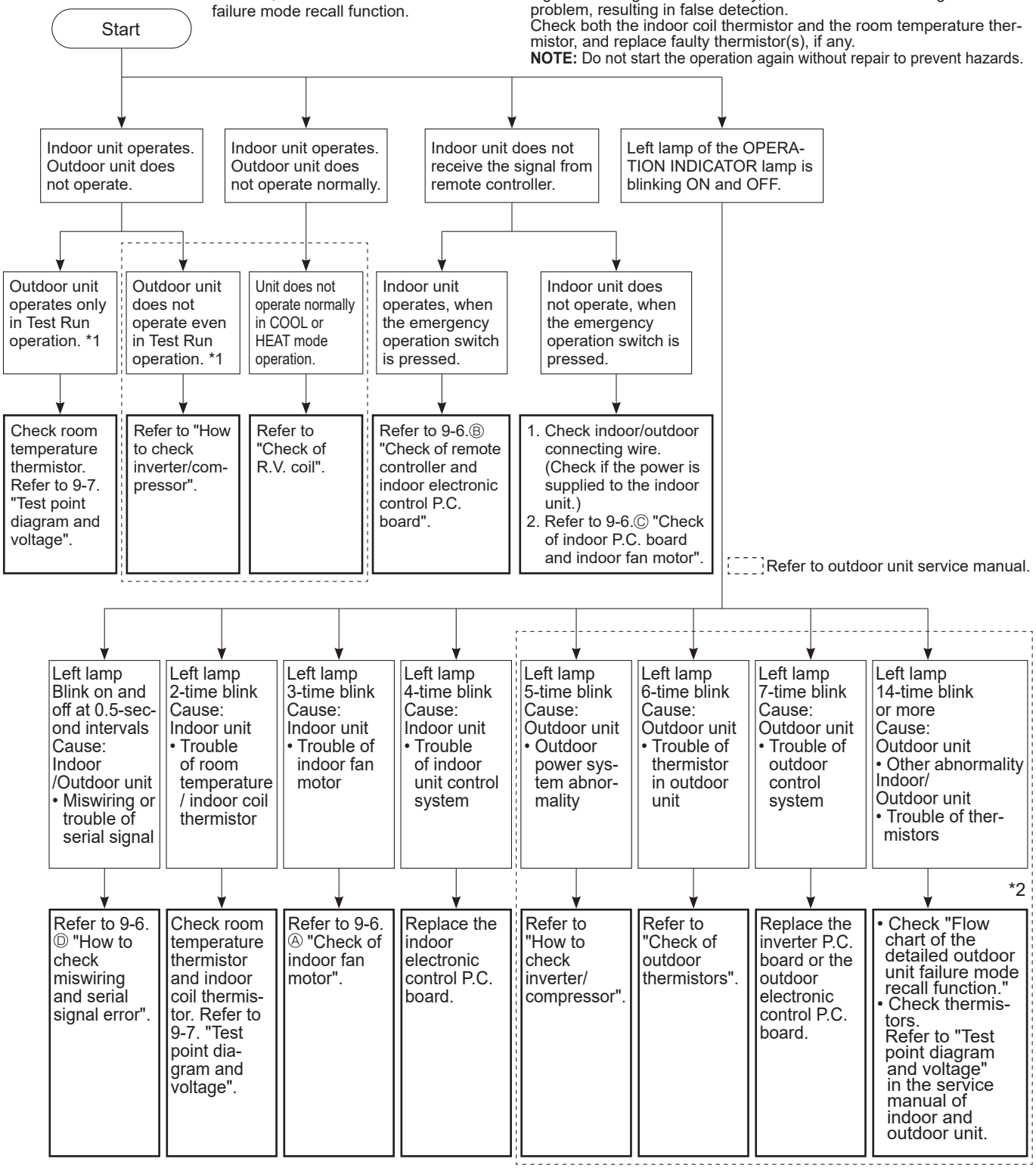

9-4. TROUBLESHOOTING CHECK TABLE

Before taking measures, make sure that the symptom reappears for accurate troubleshooting.
When the indoor unit has started operation and detected an abnormality of the following condition (the first detection after the power ON), the indoor fan motor turns OFF and OPERATION INDICATOR lamp blinks.

• The following indicator applies regardless of shape of the indication.

OPERATION INDICATOR

Lit
Blinking
Not lit

No.	Abnormal point	Operation indicator lamp	Symptom	Condition	Remedy
1	Miswiring or serial signal	Left lamp blinks. 0.5-second ON 0.5-second OFF	Indoor unit and outdoor unit do not operate.	The serial signal from the outdoor unit is not received for 6 minutes.	• Refer to 9-6. Ⓓ "How to check miswiring and serial signal error".
2	Indoor coil thermistor Room temperature thermistor	Left lamp blinks. 2-time blink 2.5-second OFF		The indoor coil or the room temperature thermistor is short or open circuit.	• Refer to the characteristics of indoor coil thermistor, and the room temperature thermistor (9-7.).
3	Indoor fan motor	Left lamp blinks. 3-time blink 2.5-second OFF		The rotational frequency feedback signal is not emitted during the indoor fan operation.	• Refer to 9-6. Ⓐ "Check of indoor fan motor".
4	Indoor control system	Left lamp blinks. 4-time blink 2.5-second OFF		It cannot properly read data in the nonvolatile memory of the indoor electronic control P.C. board.	• Replace the indoor electronic control P.C. board.
5	Outdoor power system	Left lamp blinks. 5-time blink 2.5-second OFF		It consecutively occurs 3 times that the compressor stops for overcurrent protection or start-up failure protection within 1 minute after start-up.	• Refer to "How to check of inverter/compressor". Refer to outdoor unit service manual • Check the stop valve.
6	Outdoor thermistors	Left lamp blinks. 6-time blink 2.5-second OFF		The outdoor thermistors short or open circuit during the compressor operation.	• Refer to "Check of outdoor thermistor". Refer to outdoor unit service manual.
7	Outdoor control system	Left lamp blinks. 7-time blink 2.5-second OFF		It cannot properly read data in the nonvolatile memory of the inverter P.C. board or the outdoor electronic control P.C. board.	• Replace the inverter P.C. board or the outdoor electronic control P.C. board. Refer to outdoor unit service manual.
8	Other abnormality	Left lamp blinks. 14-time blink or more 2.5-second OFF		An abnormality other than the above is detected. An abnormality of the indoor thermistors, the defrost thermistor or ambient temperature thermistor is detected.	• Check the stop valve. • Check the 4-way valve. • Check the abnormality in detail using the failure mode recall function for outdoor unit. • Refer to TEST POINT DIAGRAM AND VOLTAGE" on the service manual of indoor and outdoor unit for the characteristics of the thermistors. (Do not start the operation again without repair to prevent hazards.)
9	Outdoor control system	Left lamp lights up.	Outdoor unit does not operate	It cannot properly read data in the nonvolatile memory of the inverter P.C. board or the outdoor electronic control P.C. board.	• Check the blinking pattern of the LED on the inverter P.C. board or the outdoor electronic control P.C. board.

9-5. TROUBLESHOOTING CRITERION OF MAIN PARTS

NTXWPH06B112AA NTXWPH09B112AA NTXWPH12B112AA NTXWPH15B112AA NTXWPH18B112AA

Part name	Check method and criterion	Figure
Room temperature thermistor (RT11) Indoor coil thermistor (RT12, RT13)	Measure the resistance with a multimeter. Refer to 9-7. "Test point diagram and voltage", "Indoor electronic control P.C. board", for the chart of thermistor.	
Indoor fan motor (MF)	Check 9-6.Ⓐ "Check of indoor fan motor".	
Vane motor (MV1) (HORIZONTAL)	Measure the resistance between the terminals with a multimeter. (Temperature: 50 - 86°F (10 - 30°C)) Color of the lead wire: Normal RED - SKY*: 262 - 328 Ω	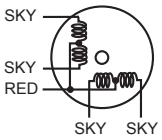
Vane motor (MV2) (VERTICAL)	Measure the resistance between the terminals with a multimeter. (Temperature: 50 - 86°F (10 - 30°C)) Color of the lead wire: Normal RED - SKY*: 219 - 273 Ω	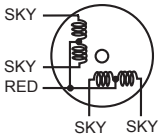
i-see SENSOR MOTOR (MT)	Measure the resistance between the terminals with a multimeter. (Temperature: 50 - 86°F (10 - 30°C)) Color of the lead wire: Normal RED - BLK: 262 - 328 Ω	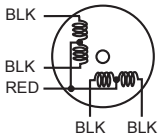

*SKY=SKY BLUE

9-6. TROUBLESHOOTING FLOW

Ⓐ Check of indoor fan motor

The indoor fan motor error has occurred, and the indoor fan does not operate.

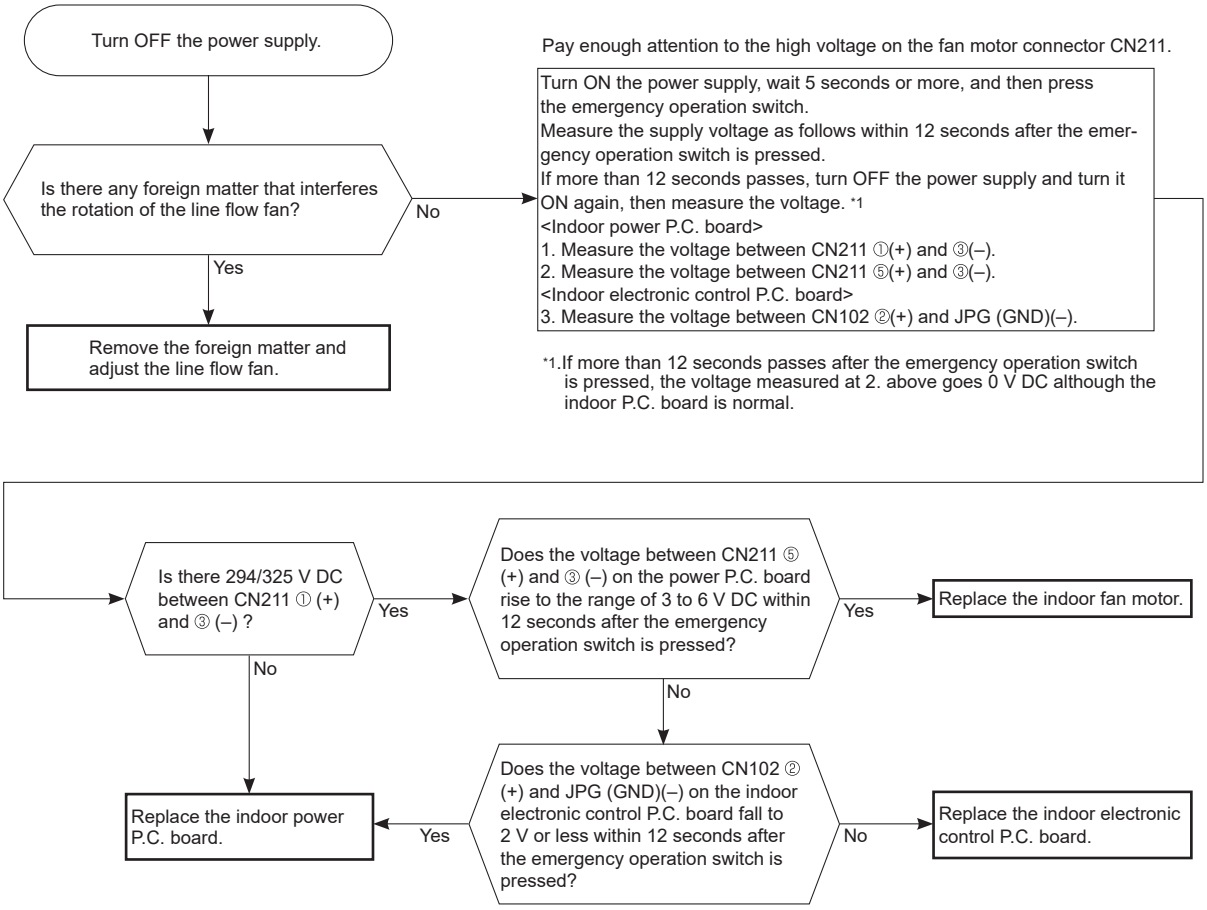

The indoor fan motor error has occurred, and the indoor fan repeats "12-second ON and 30-second OFF" 3 times, and then stops.

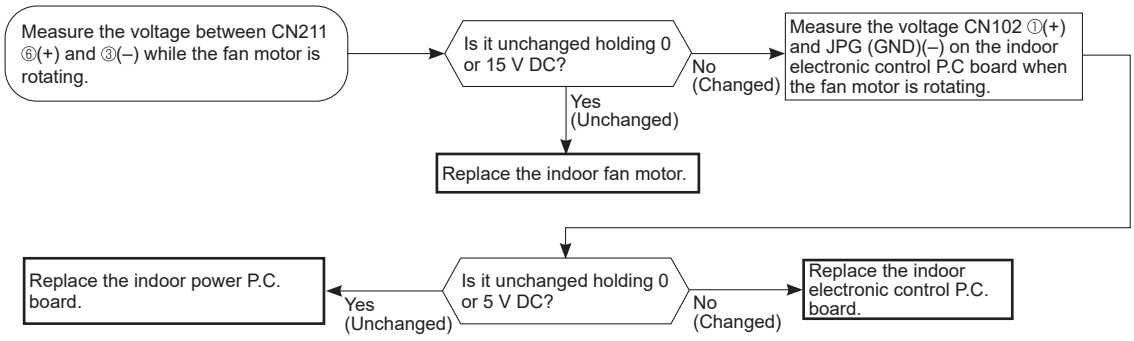

Ⓑ Check of remote controller and indoor electronic control P.C. board

Check if the remote controller is exclusive for this air conditioner.

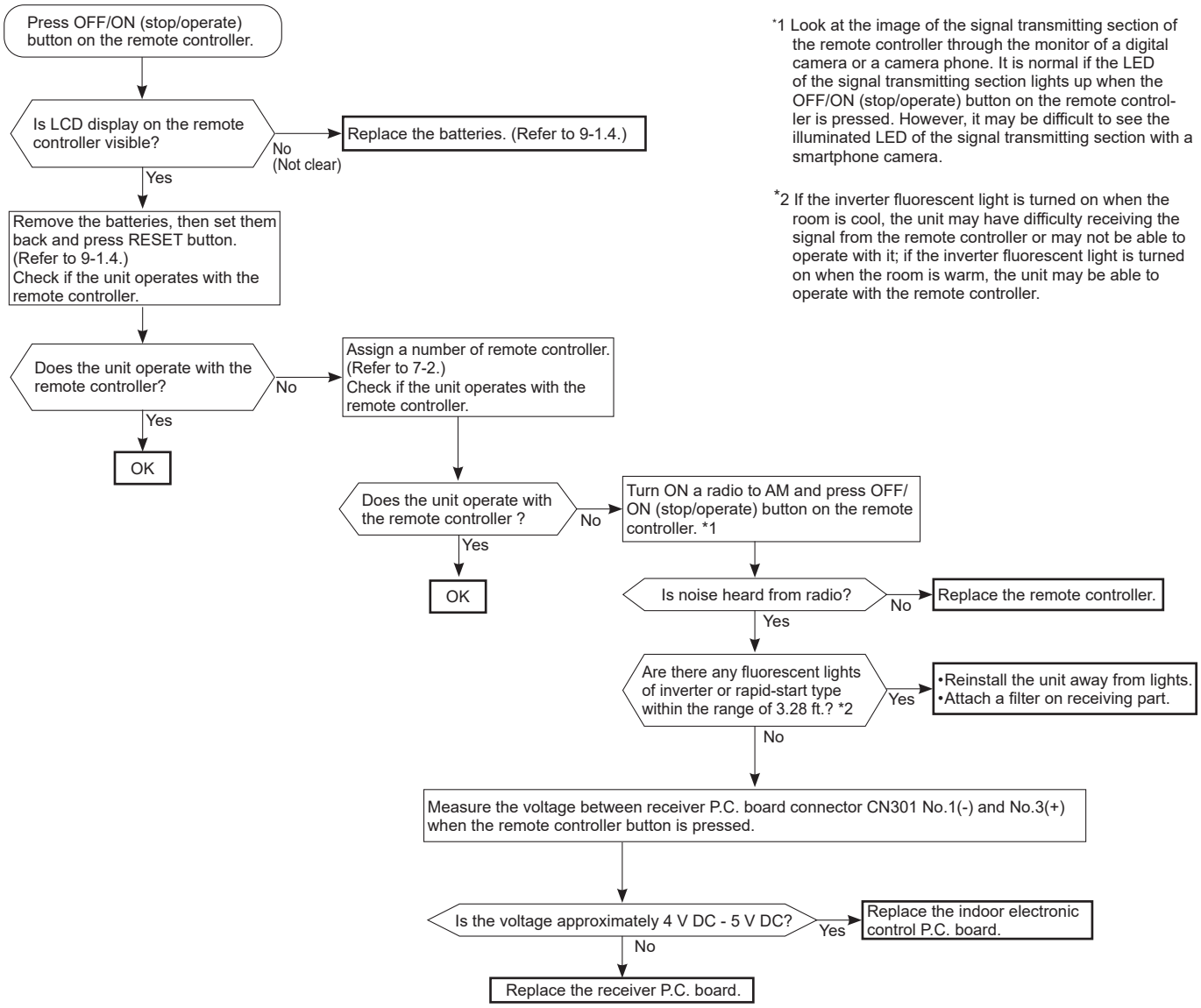

*1 Look at the image of the signal transmitting section of the remote controller through the monitor of a digital camera or a camera phone. It is normal if the LED of the signal transmitting section lights up when the OFF/ON (stop/operate) button on the remote controller is pressed. However, it may be difficult to see the illuminated LED of the signal transmitting section with a smartphone camera.

*2 If the inverter fluorescent light is turned on when the room is cool, the unit may have difficulty receiving the signal from the remote controller or may not be able to operate with it; if the inverter fluorescent light is turned on when the room is warm, the unit may be able to operate with the remote controller.

Ⓒ Check of indoor P.C. board and indoor fan motor

Turn OFF the power supply.
Remove indoor fan motor connector CN211 from indoor power P.C. board and vane motor connector CN151 from the indoor electronic control P.C. board and turn ON the power supply.

Does the unit operate with the remote controller?
Does OPERATION INDICATOR lamp light up by pressing the emergency operation switch?

Yes →
- Measure the resistance between CN211 ③ and ④ of the indoor fan motor connector. → Short circuit: Replace the indoor fan motor.
- Measure the resistance of the vane motor coil. Refer to 9-5. → Short circuit: Replace the vane motor and the indoor electronic control P.C. board.
- Measure the resistance of the i-see SENSOR MOTOR coil. Refer 9-5. → Short circuit: Replace the i-see SENSOR MOTOR and the indoor electronic P.C. board.

No →

Turn OFF the power supply.
Check both "parts side" and "pattern side" of the indoor power P.C. board visually.

Are the varistor (NR11) burnt and the fuse (F11) blown?
- Yes → Replace the varistor (NR11) and fuse (F11). *3
- No

Be sure to check both the fuse and the varistor in any case.

Is the fuse (F11) blown only?
- No
- Yes → Measure the resistance between CN211 ①(+) and ③(-) of indoor fan motor connector. *1, *2

Is the resistance 1MΩ or more?
- No → Replace the fuse (F11) and the indoor fan motor. *3
- Yes → Replace the fuse (F11). *3

*1. The fan motor connector's ① lead wire is red, whereas ③ is black.
*2. Connect "+" of the multimeter to fan motor connector's ① lead wire, and "-" to ③ lead wire, otherwise the resistance cannot be measured properly.
*3. Please replace the fuse after removing the indoor power P.C. board from the electrical box.

Measure the resistance of resistor (R111) on the indoor power P.C. board.

Is the resistance of resistor (R111) approximately 3.9 Ω ?
- No → Replace the indoor power P.C. board and the indoor fan motor.
- Yes →

Is there approximately 5 V DC between 5 V (+) and JPG (GND) (-) of the indoor electronic control P.C. board?
Is there approximately 12 V DC between 12 V (+) and JPG (GND) (-) of the indoor electronic control P.C. board?
- Yes → Replace the indoor fan motor.
- No →

Is connector CN102 on the indoor electronic control P.C. board or lead wires disconnected?
- Yes → Connect the connector or repair disconnection.
- No → Replace the indoor electronic control P.C. board.

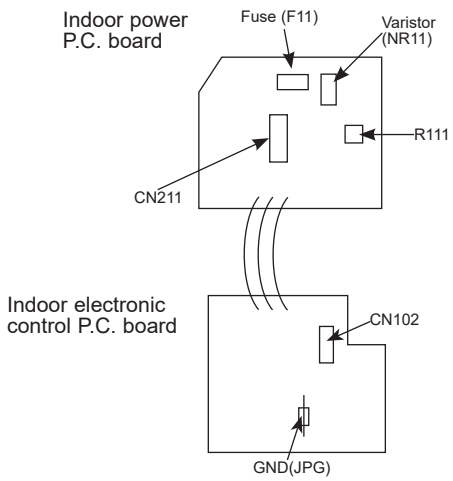

Ⓓ How to check miswiring and serial signal error

NTXSPB/SPH·B112AA type

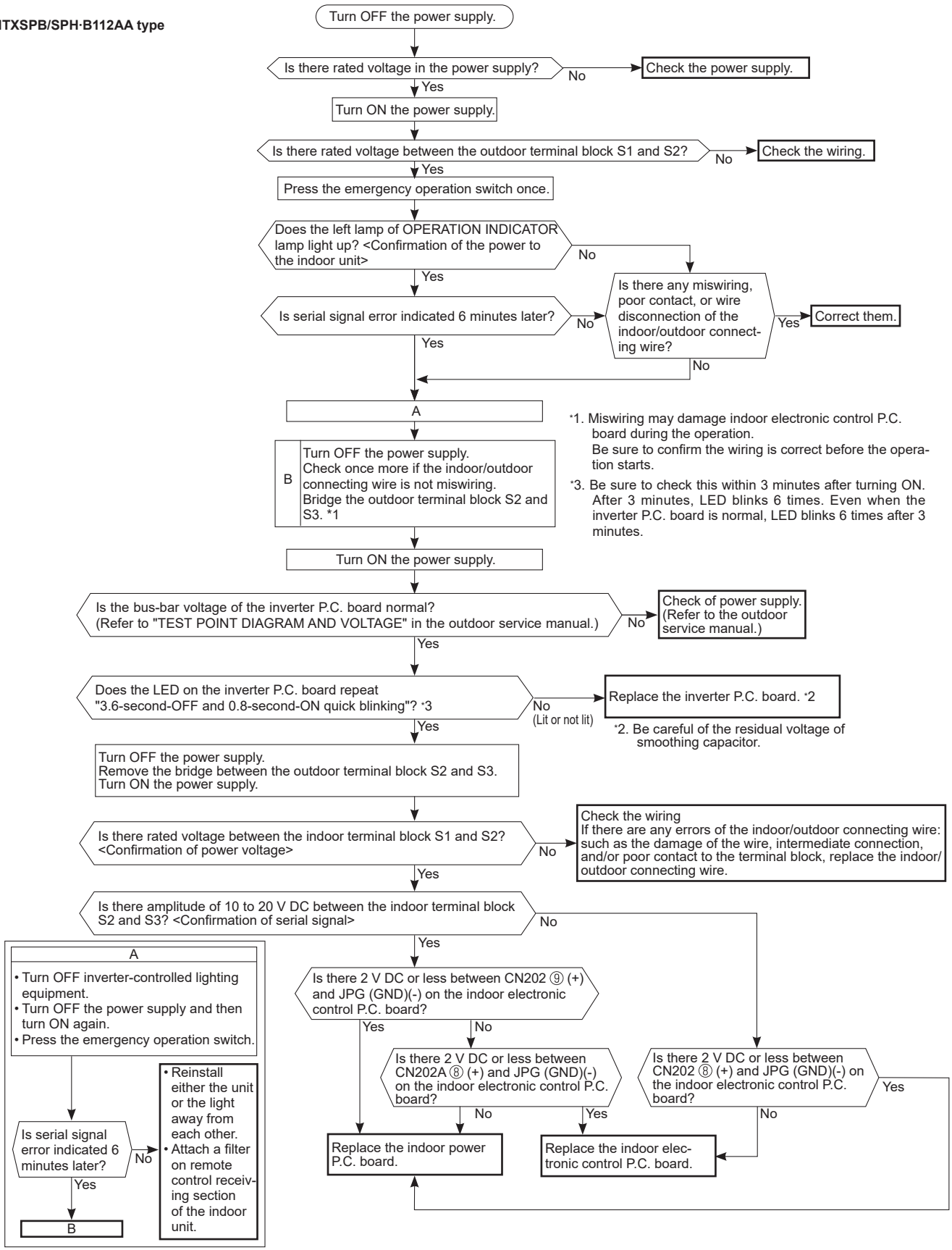

*1. Miswiring may damage indoor electronic control P.C. board during the operation.
Be sure to confirm the wiring is correct before the operation starts.

*3. Be sure to check this within 3 minutes after turning ON. After 3 minutes, LED blinks 6 times. Even when the inverter P.C. board is normal, LED blinks 6 times after 3 minutes.

*2. Be careful of the residual voltage of smoothing capacitor.

NTXMMX/MPH·A122AA type

LED indication for communication status

Communication status is indicated by the LED.

Unit status
Blinking: normal communication
Lit: abnormal communication or not connected

Pattern 1 and 2 is repeatedly displayed alternately. Each pattern is displayed for 15 seconds.

NOTE: "Lit" in the table below does not indicate abnormal communication.

Outdoor control P.C. board

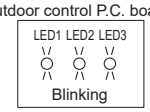

Pattern	LED 1	LED 2	LED 3
1	Unit A status	Unit B status	Lit
2	Unit C status	Unit D status	Not lit
3	Unit E status	———	Blinking

Turn OFF the power supply.

Is there rated voltage in the power supply?
- No → Check the power supply.
- Yes ↓

Turn ON the power supply.

Is there rated voltage between outdoor terminal block S1 and S2?
- No → Check the wiring.
- Yes ↓

Press the emergency operation switch once.

Does the left lamp of OPERATION INDICATOR lamp light up? <Confirmation of the power to the indoor unit>
- No ↓
- Yes ↓

Is serial signal error indicated 6 minutes later?
- No → Is there any miswiring, poor contact, or wire disconnection of the indoor/outdoor connecting wire?
  - Yes → Correct them.
  - No ↓
- Yes ↓

· Turn OFF inverter-controlled lit equipment.
· Turn OFF the power supply and then turn ON again.
· Press the emergency operation switch.

Is serial signal error indicated 6 minutes later?
- No → · Reinstall either the unit or the light away from each other. · Attach a filter on remote control receiving section of the indoor unit.
- Yes ↓

Turn OFF the power supply.
Check once more if the indoor/outdoor connecting wire is not miswiring.
Bridge the outdoor terminal block S2 and S3. *1

*1 Miswiring may damage indoor electronic control P.C. board during the operation.
Be sure to confirm the wiring is correct before the operation starts.

Turn ON the power supply.

Does the LED on the outdoor control P.C. board repeat "3.6-second-OFF and 0.8-second-ON quick blinking"?
- No (Lit or not lit) → Replace the outdoor control P.C. board. * 2
- Yes ↓

* 2 Be careful of the residual voltage of smoothing capacitor.

Turn OFF the power supply.
Remove the bridge between outdoor terminal block S2 and S3.
Turn ON the power supply.
Is there amplitude of 10 to 20 V DC between outdoor terminal block S2 and S3? <Confirmation of serial signal>
- No ↓
- Yes ↓

Is there rated voltage between indoor terminal block S1 and S2? <Confirmation of power voltage>
- No → Is there any error of the indoor/outdoor connecting wire, such as the damage of the wire, intermediate connection, poor contact to the terminal block?
  - Yes → Replace the indoor/outdoor connecting wire.
  - No ↓
- Yes ↓

Replace the indoor electronic control P.C. board.

Be sure to release the failure-mode recall function after checking.

Ⓔ Electromagnetic noise enters into TV sets or radios

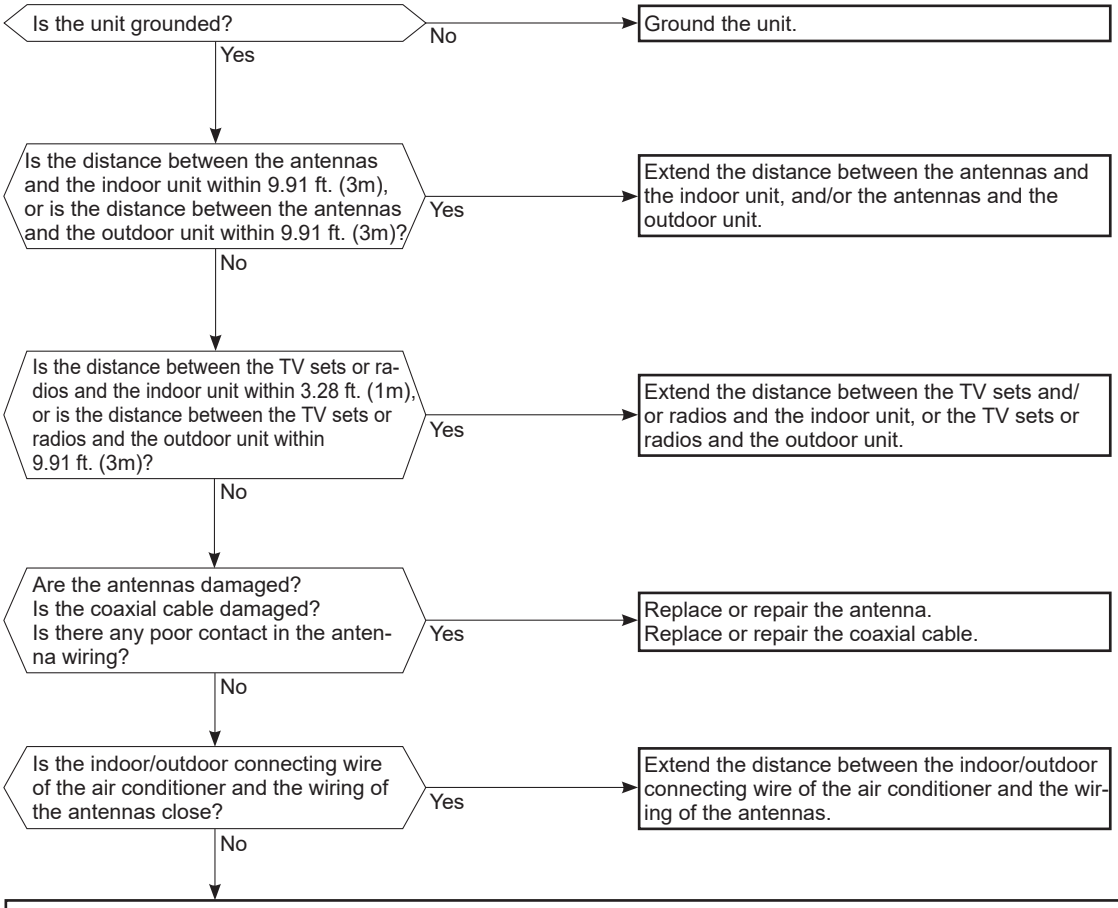

Even if all of the above conditions are fulfilled, the electromagnetic noise may enter, depending on the electric field strength or the installation condition (combination of specific conditions such as antennas or wiring).
Check the following before asking for service.

1. Devices affected by the electromagnetic noise
   TV sets, radios (FM/AM broadcast, shortwave)
2. Channel, frequency, broadcast station affected by the electromagnetic noise
3. Channel, frequency, broadcast station unaffected by the electromagnetic noise
4. Layout of:
   indoor/outdoor unit of the air conditioner, indoor/outdoor wiring, ground wire, antennas, wiring from antennas, receiver
5. Electric field intensity of the broadcast station affected by the electromagnetic noise
6. Presence or absence of amplifier such as booster
7. Operation condition of air conditioner when the electromagnetic noise enters in
   1) Turn OFF the power supply once, and then turn ON the power supply. In this situation, check for the electromagnetic noise.
   2) Within 3 minutes after turning ON the power supply, press OFF/ON (stop/operate) button on the remote controller for power ON, and check for the electromagnetic noise.
   3) After a short time (3 minutes later after turning ON), the outdoor unit starts running. During operation, check for the electromagnetic noise.
   4) Press OFF/ON (stop/operate) button on the remote controller for power OFF, when the outdoor unit stops but the indoor/outdoor communication still runs on. In this situation, check for the electromagnetic noise.

9-7. TEST POINT DIAGRAM AND VOLTAGE

Indoor power P.C. board, Indoor electronic control P.C. board, Receiver board, Display board, Switch board

NTXWPH06B112AA NTXWPH09B112AA NTXWPH12B112AA NTXWPH15B112AA NTXWPH18B112AA

Indoor power P.C. board

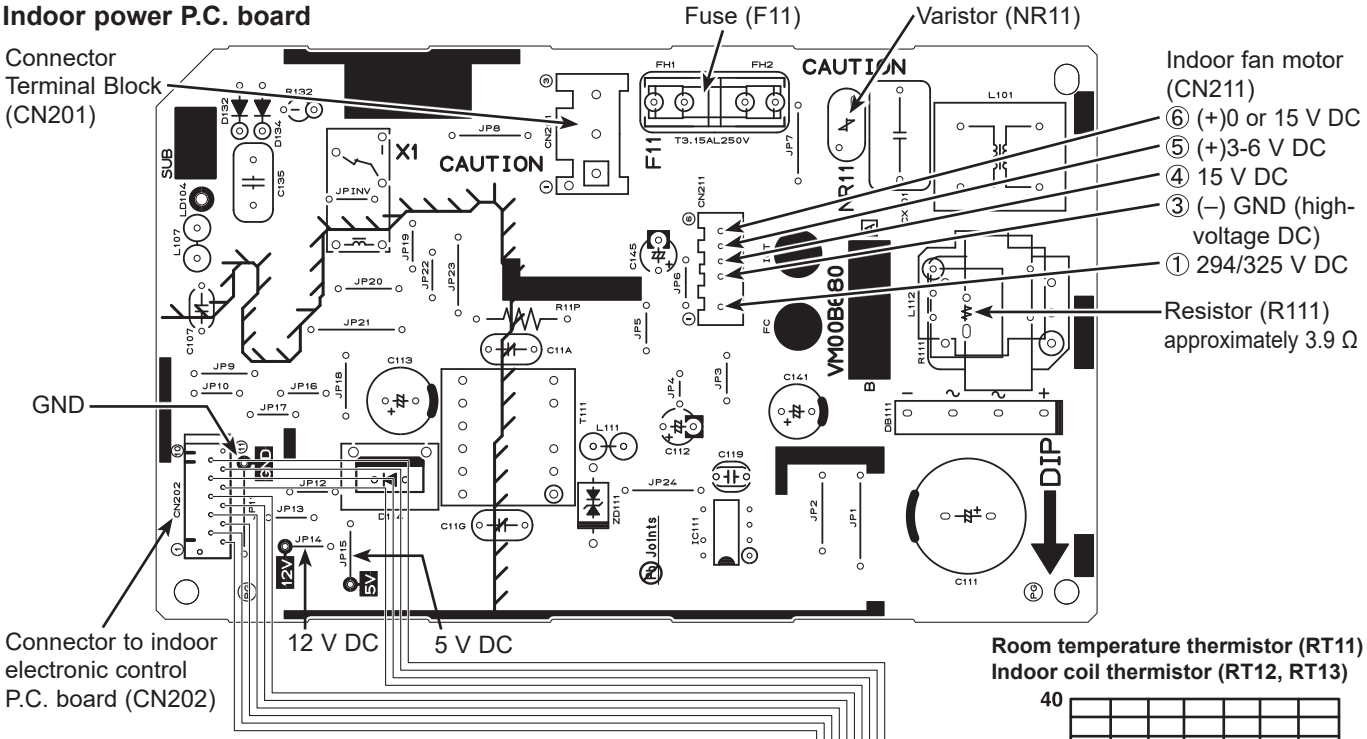

Room temperature thermistor (RT11)
Indoor coil thermistor (RT12, RT13)

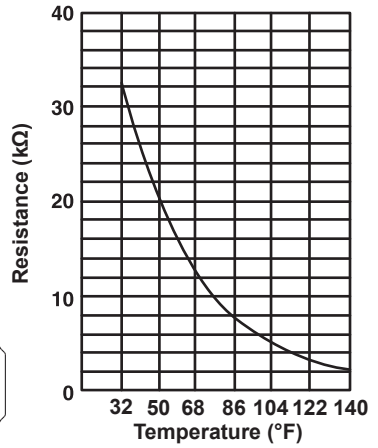

Indoor electronic control P.C. board

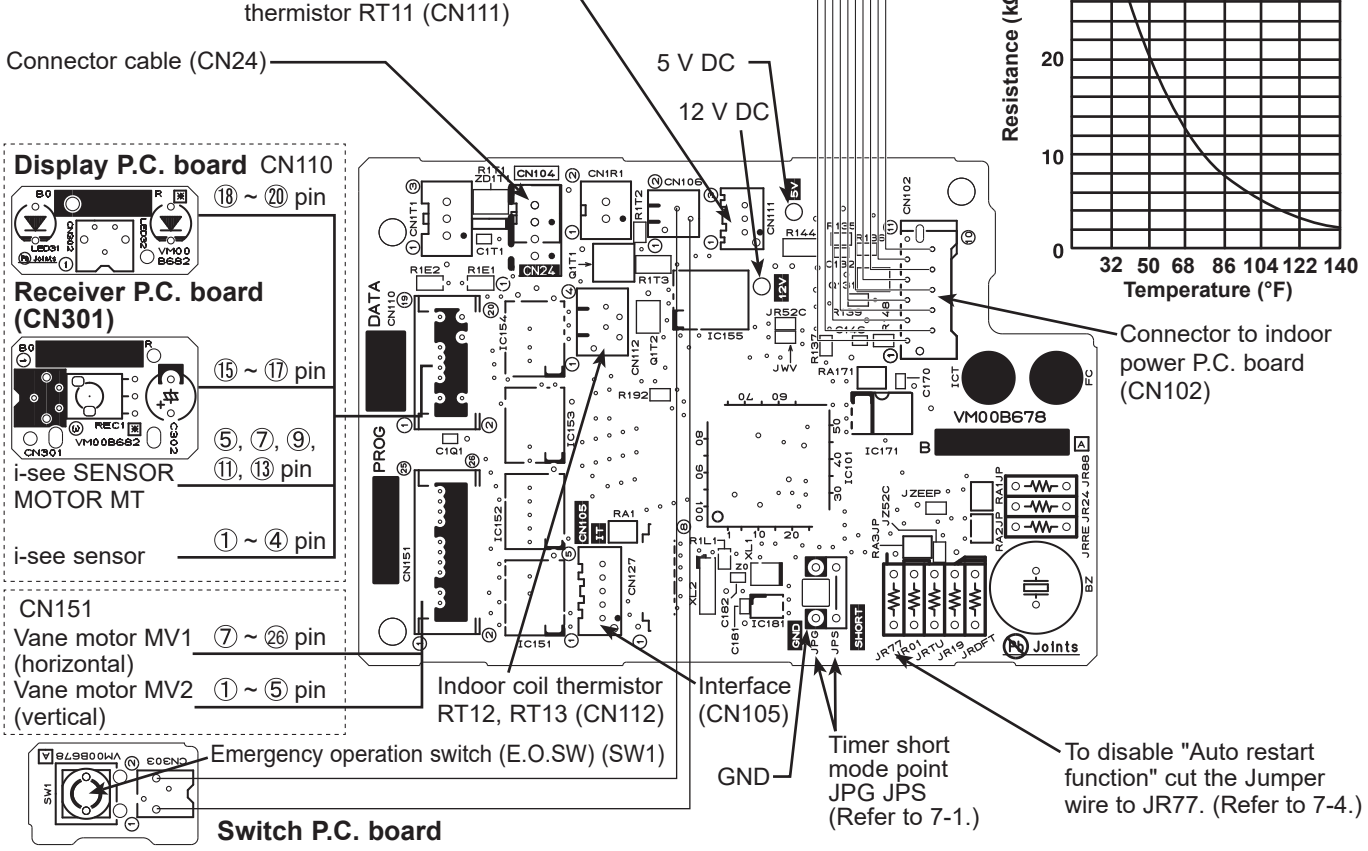

10 DISASSEMBLY INSTRUCTIONS

<Detaching method of the terminal with locking mechanism>

The terminal which has the locking mechanism can be detached as shown below.
There are 2 types of the terminal with locking mechanism.
The terminal without locking mechanism can be detached by pulling it out.
Check the shape of the terminal before detaching.

(1) Slide the sleeve and check if there is a locking lever or not.

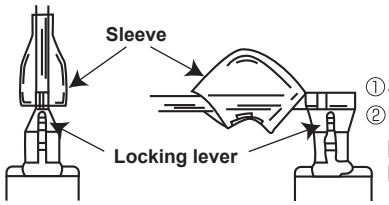

①Slide the sleeve.
②Pull the terminal while pushing the locking lever.

(2) The terminal with the connector shown below has the locking mechanism.

①Hold the sleeve, and pull out the terminal slowly.

10-1. NTXWPH06B112AA NTXWPH09B112AA NTXWPH12B112AA NTXWPH15B112AA NTXWPH18B112AA

NOTE: Turn OFF the power supply before disassembly.

→ : Indicates the visible parts in the photos/figures.
⇢ : Indicates the invisible parts in the photos/figures.

OPERATING PROCEDURE	PHOTOS/FIGURES
1. Removing the panel (1) Remove the horizontal vanes. **Removal procedure** Unlock the upper and lower vanes as shown in ① using a thin instrument. Then, remove the horizontal vanes in the direction of ②. 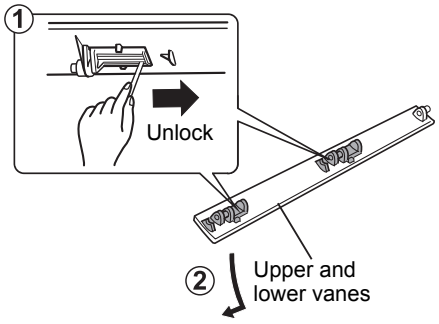 (2) Remove the front panel. Remove the screw caps of the under panel. Remove the screws of the under panel. (3) Pull out the right top corner of the right panel and remove the right panel. (4) Pull out the left bottom corner of the left panel and remove the left panel. (5) Unhook the lower part Ⓐ of the under panel and remove the under panel.	**Photo 1** 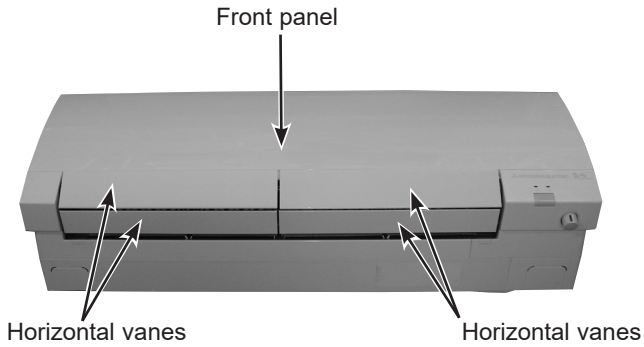 **Photo 2** 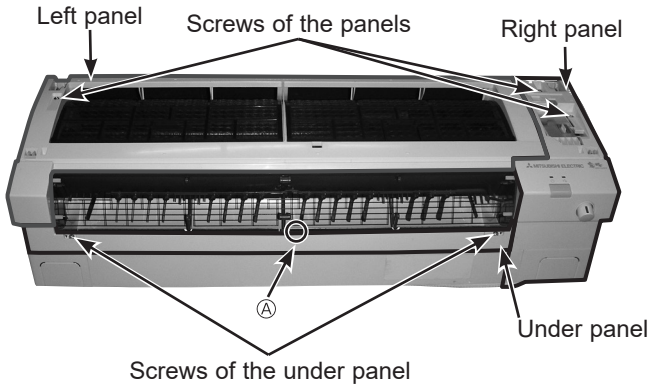

OPERATING PROCEDURE	PHOTOS/FIGURES

2. Removing the indoor electrical box

(1) Remove the panels (Refer to section 1.) and the right corner box.
(2) Remove the screw of the V.A. clamp and V.A. clamp.
(3) Remove the screw of the electrical cover and the electrical cover.
(4) Disconnect following connectors:
<Indoor electronic control P.C. board>
CN151 (Vane motor)
<Indoor power P.C. board>
CN211 (Indoor fan motor)
CN110 (DISPLAY AND i-see SENSOR ASSEMBLY)
(5) Remove DISPLAY AND i-see SENSOR ASSEMBLY.
(6) Remove the screw of conduit cover and the conduit cover.
(7) Remove the screw of conduit plate, the conduit plate and the indoor/outdoor connecting wire.
(8) Remove the ground wire connected to the indoor heat exchanger from the electrical box.
(9) Remove the screw fixing the electrical box, then the upper catch of the electrical box, and pull out the electrical box.

* When installing the electrical box, pass the lead wire from the fan motor through Ⓑ (Photo 10) and Ⓒ (Photo 4) so that it will not be pinched under the electrical box.

Photo 3

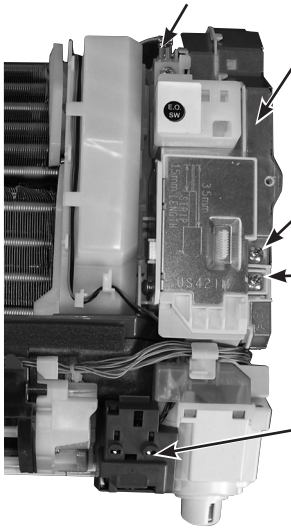

Photo 4

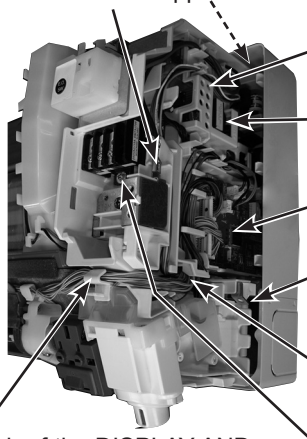

Photo 5

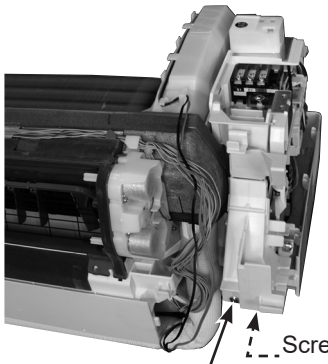

OPERATING PROCEDURE	PHOTOS/FIGURES
3. Removing the indoor power P.C. board, the switch board, the display board, the receiver board and the indoor electronic control P.C. board (1) Remove the panels (Refer to section 1.) and the right corner box. (2) Remove the indoor electrical box (Refer to section 2.). (3) Remove the ground wire connected to the electrical box from the indoor power P.C. board. (4) Disconnect the following connectors: <Indoor electronic power P.C. board> CN106 (Switch board) CN201 (Terminal block) CN202 (To the indoor electronic control P.C. board) (5) Remove the lead wire holder. (6) Remove the indoor power P.C. board. (7) Disconnect the following connectors: <Indoor electronic control P.C. board> CN111 (Room temperature thermistor) CN112 (Indoor coil thermistor) (8) Unhook the catches of the DISPLAY AND i-see SENSOR ASSEMBLY from the electrical box (right side). (9) Unhook the catch of the rear cover of the DISPLAY AND i-see SENSOR ASSEMBLY, and open the rear cover. Remove the display P.C. board and the receiver P.C. board. (10) Open the switch panel and remove the switch P.C. board.	**Photo 6** **Photo 7** 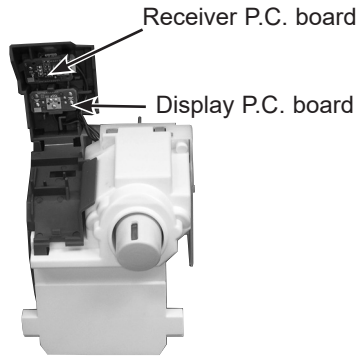

OPERATING PROCEDURE	PHOTOS/FIGURES
4. Removing the nozzle assembly (1) Remove the panels (Refer to section 1.) and the right corner box. (2) Remove the indoor/outdoor connecting wire (Refer to section 2.). (3) Remove the electrical cover (Refer to section 2.). (4) Disconnect the following connector: <Indoor electronic control P.C. board> CN151 (Vane motor) (5) Remove the DISPLAY AND i-see SENSOR ASSEMBLY. (6) Pull out the drain hose from the nozzle assembly and remove the nozzle assembly. (7) Remove the vane motors (Refer to section 5, 6.).	**Photo 8** 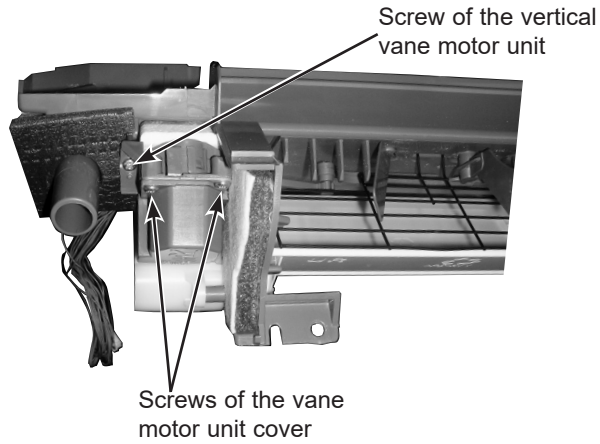
5. Removing the vertical vane motor (1) Remove the nozzle assembly (Refer to section 4.) (2) Remove the screw of the vertical vane motor unit, and pull out the vertical vane motor unit. (3) Remove the screws of the vertical vane motor unit cover. (4) Disconnect the connector from the vertical vane motor. (5) Remove the vertical vane motor from the vertical motor unit cover.	**Photo 9** 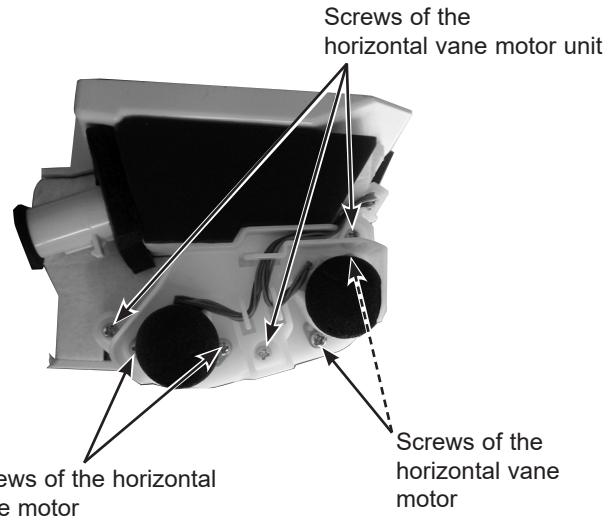
6. Removing the horizontal vane motor (1) Remove the nozzle assembly (Refer to section 4.). (2) Remove the screws of the horizontal vane motor unit, and pull out the horizontal vane motor unit. (3) Remove the screws of the horizontal vane motor. (4) Disconnect the connector from the horizontal vane motor. (5) Remove the horizontal vane motor from the horizontal vane motor unit.	

OPERATING PROCEDURE	PHOTOS/FIGURES

7. Removing the indoor fan motor, the indoor coil thermistor and the line flow fan

(1) Remove the panels (Refer to section 1.) and the right corner box.
(2) Remove the indoor electronic control P.C. board holder, the electrical box and the nozzle assembly.
(3) Remove the screws fixing the motor bed.
(4) Release the hooks of the water cut and remove the water cut.
(5) Loosen the screw fixing the line flow fan.
(6) Remove the motor bed together with the indoor fan motor and the motor band.
(7) Release the hooks of the motor band and remove the motor band. Pull out the indoor fan motor.
(8) Remove the indoor coil thermistor from the heat exchanger.
* Install the indoor coil thermistor in its former position when assembling it (Photo 10.).
(9) Remove the screws fixing the left side and the upper right side of the heat exchanger.
(10) Lift the heat exchanger, and pull out the line flow fan to the lower left.
* When attaching the line flow fan, screw the line flow fan so 4 mm gap is provided between the right end of the line flow fan and the right wall of the air passage of the box (Figure 1).

Figure 1

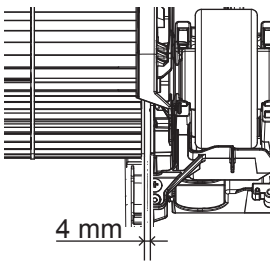

Photo 13

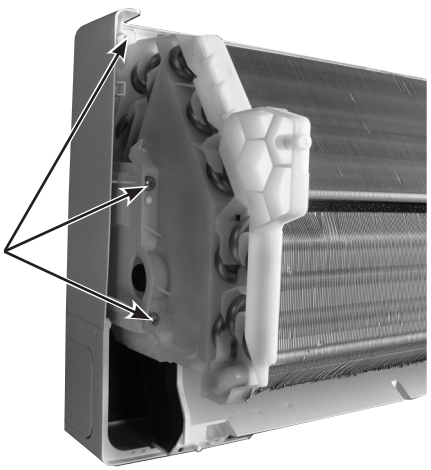

Photo 10

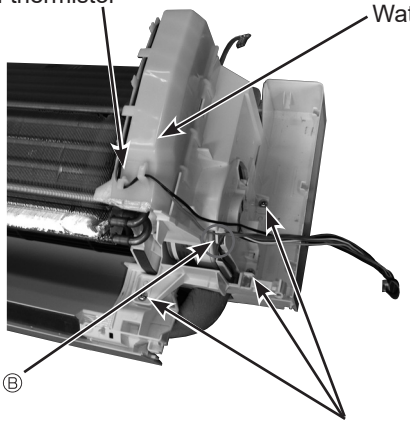

Photo 11

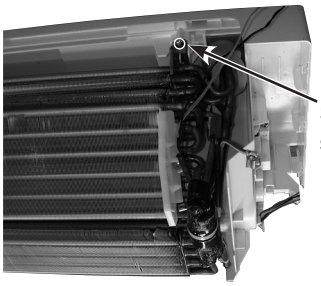

Photo 12

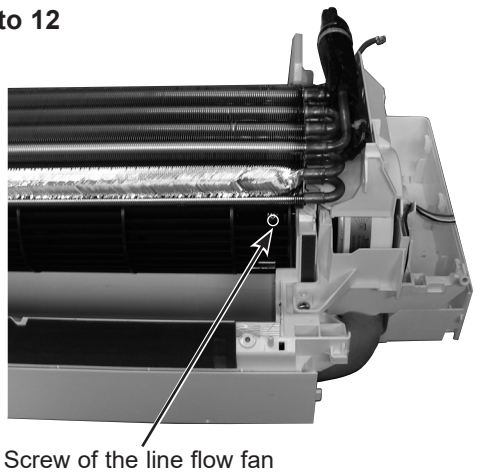

Fixing the indoor coil thermistor

* There are 2 forms of parts for fixing the indoor coil thermistor.

Clip shape

Holder shape

When fixing the indoor coil thermistor to the clip-shape/holder-shape part, the lead wire should point down.

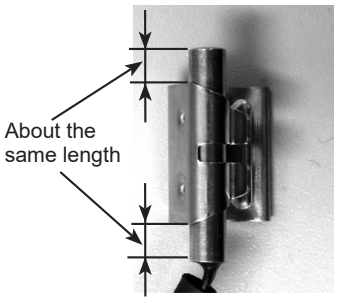

Position and procedure for mounting the clip-shape part

1. Set the indoor coil thermistor in the center of the clip-shape part.

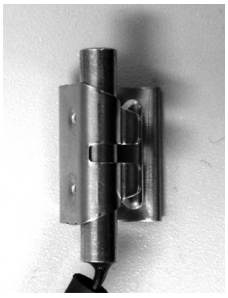

2. Check the (marked) mounting position.

3. Mount the clip-shape part.

NOTE:

- Take care to avoid loss and accidental falling of the clip-shape part inside the unit.
- Mount the clip-shape part on the marked position.
- Do not pull the lead wire when removing the indoor coil thermistor.

MITSUBISHI ELECTRIC TRANE HVAC US LLC

HEAD OFFICE: 1340 SATELLITE BOULEVARD, SUWANEE, GA 30024, USA

© Copyright 2020 MITSUBISHI ELECTRIC CORPORATION

Issued: Nov. 2021. No. OBHT872 REVISED EDITION-A
Published: Nov. 2020. No. OBHT872
Made in Japan

Specifications are subject to change without notice.