TRANE®

MITSUBISHI ELECTRIC

AIR CONDITIONER

2022

R410A

Service Handbook

Model

TCMBM0108VA11N4
TCMBM1016VA11N4
TCMBS0108VB11N4
TCMBS1016VB11N4

Safety Precautions

- Read and observe the safety precautions below and the instructions provided on the labels affixed to the unit.
- Retain this manual for future reference. Make sure that this manual is passed on to the end users.
- All refrigerant piping work, electrical work, air-tightness test, and brazing work must be performed by qualified personnel.
- Incorrect use may result in serious injury.

⚠ WARNING	**indicates a hazardous situation which, if not avoided, could result in death or serious injury.**
⚠ CAUTION	**indicates a hazardous situation which, if not avoided, could result in minor or moderate injury.**
CAUTION	**addresses practices not related to personal injury, such as product and/or property damage.**

General Precautions

⚠ WARNING

Do not use refrigerant other than the type indicated in the manuals provided with the unit and on the nameplate. Doing so may cause the unit or pipes to burst, or result in explosion or fire during use, during repair, or at the time of disposal of the unit. It may also be in violation of applicable laws. MITSUBISHI ELECTRIC TRANE HVAC US LLC cannot be held responsible for malfunctions or accidents resulting from the use of the wrong type of refrigerant.

Do not install the unit in a place where large amounts of oil, steam, organic solvents, or corrosive gases, such as sulfuric gas, are present or where acidic/alkaline solutions or sprays containing sulfur are used frequently. These substances can compromise the performance of the unit or cause certain components of the unit to corrode, which can result in refrigerant leakage, water leakage, injury, electric shock, malfunctions, smoke, or fire.

Do not try to defeat the safety features of the unit or make unauthorized setting changes. Forcing the unit to operate the unit by defeating the safety features of the devices such as the pressure switch or the temperature switch, making unauthorized changes to the switch settings, or using accessories other than the ones recommended by MITSUBISHI ELECTRIC TRANE HVAC US LLC may result in smoke, fire, or explosion.

To reduce the risk of shorting, current leakage, electric shock, malfunctions, smoke, or fire, do not splash water on electric parts.

To reduce the risk of electric shock, malfunctions, smoke or fire, do not operate the switches/buttons or touch other electrical parts with wet hands.

To reduce the risk of pipe burst and explosion, do not allow gas refrigerant and refrigerant oil to be trapped in the refrigerant circuit.

To reduce the risk of burns or frost bites, do not touch the refrigerant pipes or refrigerant circuit components with bare hands during and immediately after operation.

To reduce the risk of burns, do not touch any electrical parts with bare hands during or immediately after stopping operation.

To reduce the risk of injury from falling tools, keep children away while installing, inspecting, or repairing the unit.

Keep the space well ventilated. Refrigerant can displace air and cause oxygen starvation. If leaked refrigerant comes in contact with a heat source, toxic gas may be generated.

Always replace a fuse with one with the correct current rating. The use of improperly rated fuses or a substitution of fuses with steel or copper wire may result in bursting, fire or explosion.

To reduce the risk of electric shock, smoke, and fire due to infiltration of dust and water, properly install all required covers.

To reduce the risk of electric shock, smoke, and fire due to infiltration of dust and water, properly install all required terminal block covers and insulation sheets.

To reduce the risk of electric shock, smoke, and fire due to infiltration of dust and water, properly install all required covers and panels on the terminal box and control box.

⚠ CAUTION

To reduce the risk of fire or explosion, do not place flammable materials or use flammable sprays around the unit.

To reduce the risk of being caught in rotating parts, electric shock, and burns, do not operate the unit without all required panels and guards being installed.

To reduce the risk of injury, do not sit, stand, or place objects on the unit.

The unit described in this manual is not intended for use with food, animals, plants, precision instruments, or art work.

To reduce the risk of water leakage and malfunctions, do not turn off the power immediately after stopping operation. Leave the unit turned on for at least 5 minutes before turning off the power.

Do not install the unit over things that are vulnerable to water damage from condensation dripping.

To reduce the risk of injury, electric shock, and malfunctions, do not touch or allow cables to come in contact with the edges of components.

To reduce the risk of injury, do not touch the heat exchanger fins or sharp edges of components with bare hands.

Always wear protective gears when touching electrical components on the unit. Several minutes after the power is switched off, residual voltage may still cause electric shock.

To reduce the risk of electric shock and burns, always wear protective gear when working on units.

To reduce the risk of injury from units falling or falling over, periodically check the installation base for damage.

Consult an authorized agency for the proper disposal of the unit. Refrigerant oil and refrigerant that may be left in the unit pose a risk of fire, explosion, or environmental pollution.

To reduce the risk of injury, do not insert fingers or foreign objects into air inlet/outlet grills. If the unit is left on a damaged base, it may fall and cause injury.

To reduce the risk of injury, always wear protective gear when working on units.

Do not release refrigerant into the atmosphere. Collect and reuse the refrigerant, or have it properly disposed of by an authorized agency. Refrigerant poses environmental hazards if released into the air.

If the ambient temperature can drop below freezing while the heat-source unit is not in use, blow the water out of the pipes or fill them with anti-freeze solution.

- Failure to do so may cause the water in the pipes to freeze and damage the unit.
- Water from burst pipes may result in water-damage to the furnishings.

Make sure the supply-water flow rate falls within the specified range.

- Failure to maintain the adequate flow rate can result in corrosion of the heat-source unit.
- Water from corroded pipes can result in water-damage to the furnishings.

Transportation and Installation

⚠WARNING

Lift the unit by placing the slings at designated locations. Support the unit securely at four points to keep it from slipping and sliding. If the unit is not properly supported, it may fall and cause personal injury.

⚠CAUTION

To reduce the risk of injury, do not carry the product by the PP bands that are used on some packages.

To reduce the risk of injury, products weighing 20 kg (44 lbs) or more should be carried by two or more people.

Installation

⚠WARNING

Do not install the unit where there is a risk of leaking flammable gas.
If flammable gas accumulates around the unit, it may ignite and cause a fire or explosion.

To reduce the risk of injury from coming in contact with units, install units where they are not accessible to people other than maintenance personnel.

To reduce the risk of injury, properly dispose of the packing materials so that children will not play with them.

Properly dispose of the packing materials. Plastic bags pose suffocation hazard to children.

All drainage work should be performed by the dealer or qualified personnel according to the instructions detailed in the Installation Manual. Improper drainage work may cause water leakage and resultant damage to the furnishings.

Remove packing materials from the unit before operating the unit. Note that some accessories may be taped to the unit. Properly install all accessories that are required. Failing to remove the packing materials or failing to install required accessories may result in refrigerant leakage, oxygen deprivation, smoke, or fire.

Consult your dealer and take appropriate measures to safeguard against refrigerant leakage and resultant oxygen starvation. An installation of a refrigerant gas detector is recommended.

Any additional parts must be installed by the dealer or qualified personnel. Only use the parts specified by MITSUBISHI ELECTRIC TRANE HVAC US LLC. Installation by unauthorized personnel or use of unauthorized parts or accessories may result in water leakage, electric shock, or fire.

Take appropriate safety measures against wind gusts and earthquakes to prevent the unit from toppling over and causing injury.

To reduce the risk of injury from units falling or falling over, install the unit on a surface that is strong enough to support its weight.

To reduce the risk of injury from units falling or falling over, periodically check the installation base for damage.

All installation work must be performed by qualified personnel in accordance with this manual.

- Improper installation may result in refrigerant leakage, water leakage, serious injury, electric shock, or fire.

⚠CAUTION

Do not install the unit over things that are vulnerable to water damage. Provide an adequate collective drainage system for the drain water from unit as necessary.

Do not install the unit over things that are vulnerable to water damage. When the indoor humidity exceeds 80% or if the drain water outlet becomes clogged, condensation may drip from the indoor unit onto the ceiling or floor.

To reduce the risk of damage to the unit and resultant electric leak and electric shock, keep small animals, snow, and rain water from entering the unit by closing the gap in the pipe and wire access holes.

To reduce the risk of rain water or drain water from entering the room and damaging the interior, drainage work must be performed by your dealer or qualified personnel according to the instructions detailed in the Installation Manual.

To reduce the risk of drain water overflow, install the unit horizontally, using a level.

Piping Work

⚠WARNING

To reduce the risk of injury, including frost bites, that may result from being blasted with refrigerant, use caution when operating the refrigerant service valve. If refrigerant leaks out and comes in contact with an open flame, toxic gases may be generated.

To reduce the risk of refrigerant catching fire and causing burns, remove the refrigerant gas and the residual refrigerant oil in the pipes before heating them.

To reduce the risk of pipe damage, refrigerant leakage, and oxygen deprivation, use pipes that meet the pipe thickness specifications, which vary by the type of refrigerant used, pipe diameter, and pipe material.

To reduce the risk of pipe burst or explosion, evacuate the refrigerant circuit using a vacuum pump, and do not purge the system with refrigerant.

To reduce the risk of explosion and deterioration of refrigerant oil caused by chloride, do not use oxygen, flammable gas, or refrigerant that contains chloride as a pressurizing gas.

To prevent explosion, do not heat the unit with refrigerant gas in the refrigerant circuit.

To reduce the risk of refrigerant leakage and resultant oxygen deprivation, use the flare nut with holes that is supplied with the refrigerant service valve.

To reduce the risk of refrigerant leakage and resultant oxygen deprivation, use the flare nut that is supplied with the unit or its equivalent that meets applicable standards.

To reduce the risk of damage to the unit, and resultant refrigerant leakage and oxygen deprivation, tighten flare nuts to a specified torque.

To reduce the risk of oxygen deprivation and gas poisoning, check for gas leakage and keep fire sources away.

Insulate pipe connections after completing the air tightness test. Performing an air tightness test with the pipe being insulated may lead to failure to detect refrigerant leakage and cause oxygen deprivation.

To reduce the risk of pipe damage and resultant refrigerant leakage and oxygen deprivation, keep the field-installed pipes out of contact with the edges of components.

When installing or relocating the unit, do not allow air or any substance other than the specified refrigerant to enter the refrigerant lines.

- Any substance other than the specified refrigerant may cause abnormally high pressure in the refrigerant lines, resulting in bursting of the pipes or an explosion.

⚠CAUTION

To reduce the risk of pipe bursting and explosion due to abnormal pressure rise, do not allow any substances other than R410A (such as air) to enter the refrigerant circuit.

To reduce the risk of water leakage and resultant damage to the furnishings, drain piping work must be performed by your dealer or qualified personnel according to the instructions detailed in the Installation Manual.

To keep the ceiling and floor from getting wet due to condensation, properly insulate the pipes.

Wiring Work

⚠WARNING

To reduce the risk of wire breakage, overheating, smoke, and fire, keep undue force from being applied to the wires.

To reduce the risk of wire breakage, overheating, smoke, or fire, properly secure the cables in place and provide adequate slack in the cables so as not to stress the terminals.

To reduce the risk of injury or electric shock, switch off the main power before performing electrical work.

All electric work must be performed by a qualified electrician according to the local regulations, standards, and the instructions detailed in the Installation Manual. Capacity shortage to the power supply circuit or improper installation may result in malfunction, electric shock, smoke, or fire.

To reduce the risk of electric shock, smoke, or fire, install an earth leakage breaker on the power supply to each unit.

To reduce the risk of electric shock, smoke, or fire, install an earth leakage breaker on the power supply to each unit. (Applicable to inverter units only)

Use properly rated breakers and fuses (earth leakage breaker, local switch <switch + fuse>, no-fuse breaker). The use of a breaker with a breaking capacity greater than the specified capacity may cause electric shock, malfunctions, smoke, or fire.

Use properly rated breakers and fuses (earth leakage breaker, local switch <switch + fuse>, no-fuse breaker). The use of a breaker with a breaking capacity greater than the specified capacity may cause electric shock, malfunctions, smoke, or fire. (Applicable to inverter units only)

To reduce the risk of current leakage, overheating, smoke, or fire, use properly rated cables with adequate current carrying capacity.

Proper grounding must be provided by a licensed electrician.
Do not connect the grounding wire to a gas pipe, water pipe, lightning rod, or telephone wire. Improper grounding may result in electric shock, smoke, fire, or malfunction due to electrical noise interference.

Tighten all terminal screws to the specified torque.

- Loose screws and contact failure may result in smoke or fire.

⚠CAUTION

To reduce the risk of current leakage, wire breakage, smoke, or fire, keep the wiring out of contact with the refrigerant pipes and other parts, especially sharp edges.

After the wiring work has been completed, measure the insulation resistance, and make sure that it reads at least 1 MΩ.

- Failure to do so may result in electric leakage, malfunction, or fire.

Relocation and Repairs

⚠WARNING

To reduce the risk of refrigerant leakage, water leakage, injury, electric shock, and fire, units should only be moved or repaired by your dealer or qualified personnel.

To reduce the risk of wire shorting, electric leak, electric shock, smoke, or fire, do not perform maintenance work in the rain.

To reduce the risk of injury, electric shock, and fire, properly reinstall all removed components after completing repair work.

⚠CAUTION

To reduce the risk of wire shorting, electric shock, malfunctions, or fire, keep circuit boards dust free, and do not touch them with your hands or tools.

To reduce the risk of refrigerant and water leakage, check the pipe supports and insulation for damage during inspection or repair, and replace or repair the ones that are found to be deteriorated.

Additional Precautions

To avoid damage to the unit, use appropriate tools to install, inspect, or repair the unit.

To reduce the risk or malfunction, turn on the power at least 12 hours before starting operation, and leave the power turned on throughout the operating season.

Recover all refrigerant in the units, and dispose of it properly according to any applicable laws and regulations.

To reduce the risk of deterioration of refrigerant oil and compressor malfunctions caused by a refrigerant that contains chloride, such as R22, only use R410A.

Provide a maintenance access to allow for the inspection of pipes above the ceiling or the buried pipes.

Take appropriate measures against electrical noise interference when installing the air conditioners in hospitals or facilities with radio communication capabilities. Inverter, high-frequency medical, or wireless communication equipment as well as power generators may cause the air conditioning system to malfunction. Air conditioning system may also adversely affect the operation of these types of equipment by creating electrical noise.

To reduce the risk of damage to the unit, leave the valves on the unit closed until refrigerant charging is completed.

Place a wet towel on the refrigerant service valve before brazing the pipes to keep its temperature from rising above 120ºC and damaging the surrounding equipment.

Direct the blazing torch flame away from the adjacent cables and sheet metal to keep them from being overheated and damaged.

Prepare tools for exclusive use with R410A. Do not use the following tools if they have been used with the conventional refrigerant (R22): gauge manifold, charging hose, refrigerant leak detector, check valve, refrigerant charge spout, vacuum gauge, and refrigerant recovery equipment. R410A does not contain chloride, so leak detectors for use with older types of refrigerants will not detect an R410A leak. Infiltration of the residual refrigerant, refrigerant oil, or water on these tools may cause the refrigerant oil in the new system to deteriorate or damage the compressor. Because R410A operates at a higher pressure than R22, tools not intended for use with R410A may be damaged if used with R410A.

To reduce the risk of the vacuum pump oil backflowing into the refrigerant cycle and causing the refrigerant oil to deteriorate, use a vacuum pump with a check valve.

Have a set of tools for exclusive use with R410A. Consult your nearest MITSUBISHI ELECTRIC TRANE HVAC US LLC Dealer.

Keep dust, dirt, and water off charging hose and flare tool. Infiltration of dust, dirt, or water into the refrigerant circuit may cause the refrigerant oil to deteriorate or damage the compressor.

Use refrigerant piping and couplings that meet the applicable standards. For refrigerant pipes, use pipes made of phosphorus deoxidized copper. Keep the inner and outer surfaces of pipes and couplings clean and free of such contaminants as sulfur, oxides, dust, dirt, shaving particles, oil, and moisture. Failure to follow these directions may result in the deterioration of refrigerant oil or compressor damage.

Store the piping materials indoors, and keep both ends of the pipes sealed until immediately before brazing. Keep elbows and other joints in plastic bags. Infiltration of dust, dirt, or water into the refrigerant circuit may cause the refrigerant oil to deteriorate or damage the compressor.

Apply ester oil, ether oil, or a small amount of alkyl benzene to flares and flanges. The use and accidental infiltration of mineral oil into the system may cause the refrigerant oil to deteriorate or damage the compressor.

To reduce the risk of oxidized film from entering the refrigerant pipe and causing the refrigerant oil to deteriorate or damaging the compressor, braze pipes under nitrogen purge.

Do not use the existing refrigerant piping. A large amount of chloride that is contained in the residual refrigerant and refrigerant oil in the existing piping may cause the refrigerant oil in the new unit to deteriorate or damage the compressor.

Charge refrigerant in the liquid state. If refrigerant is charged in the gas phase, the composition of the refrigerant in the cylinder will change, compromising the unit's performance.

Do not use a charging cylinder. The use of a charging cylinder will change the composition of the refrigerant, compromising the unit's performance.

Charge the system with an appropriate amount of refrigerant in the liquid phase. Refer to the relevant sections in the manuals to calculate the appropriate amount of refrigerant to be charged. Refrigerant overcharge or undercharge may result in performance drop, abnormal stop of operation, or compressor failure.

To reduce the risk of power capacity shortage, always use a dedicated power supply circuit.

To reduce the risk of both the breaker on the product side and the upstream breaker from tripping and causing problems, split the power supply system or provide protection coordination between the earth leakage breaker and no-fuse breaker.

Have a backup system, if failure of the unit has a potential for causing significant problems or damages.

The unit must be periodically inspected by a dealer or qualified personnel.

- If dust or dirt accumulates inside the unit, the drain pipes may become clogged, and water leakage from the pipes may wet the surroundings and generate odours.

Use circulation and makeup water that meet the water-quality standards.

- Degradation of water quality can result in water leakage.

The unit cannot be used when the outdoor temperature is outside the guaranteed operation range.
If the unit is used in such condition, the unit may not go into the Thermo-ON mode.
Guaranteed operation range: -5 to 52°C [23 to 126°F] in cooling mode, -25 to 16°C [-13 to 60°F] in heating mode
(Continuous operation is not guaranteed in -25 to -20°C [-13 to -4°F].)

CONTENTS

I Read Before Servicing

[1] Read Before Servicing 3
[2] Necessary Tools and Materials 4
[3] Piping Materials 5
[4] Storage of Piping 6
[5] Pipe Processing 6
[6] Brazing 7
[7] Air Tightness Test (Refrigerant Circuit) 8
[8] Vacuum Drying (Evacuation) (Refrigerant Circuit) 9
[9] Refrigerant Charging 11
[10] Remedies to be taken in case of a Refrigerant Leak 11
[11] Characteristics of the Conventional and the New Refrigerants 12
[12] Notes on Refrigerating Machine Oil 13
[13] Water piping 14

II Restrictions

[1] System configuration 19
[2] Switch Settings and Address Settings 21
[3] An Example of a System to which an MA Remote Controller is connected 23
[4] An Example of a System to which an ME Remote Controller is connected 29
[5] An Example of a System to which both MA Remote Controller and ME Remote Controller are connected 31
[6] Restrictions on Pipe Length 34

III HBC Controller Components

[1] HBC Controller Components 43
[2] Sub-HBC Controller Components 46
[3] Control Box of the HBC Controller and Sub-HBC Controller 48
[4] HBC Controller and Sub-HBC Controller Circuit Board 49
[5] Maintenance Equipment 51

IV Electrical Wiring Diagram

[1] Electrical Wiring Diagram of the HBC Controller and Sub-HBC Controller 55
[2] Electrical Wiring Diagram of Transmission Booster 63

V Refrigerant Circuit

[1] Refrigerant Circuit Diagram 67
[2] Principal Parts and Functions 70

VI Control

[1] Functions and Factory Settings of the Dipswitches 75
[2] Controlling HBC Controller 76
[3] Operation Flow Chart 85

VII Test Run Mode

[1] Read before Test Run 93
[2] Operating Characteristic and Refrigerant Amount 94
[3] Evaluating and Adjusting Refrigerant Charge 94
[4] Refrigerant Amount Adjust Mode 96
[5] The following symptoms are normal. 96

VIII Troubleshooting

[1] Error Code Lists 99
[2] Responding to Error Display on the Remote Controller 103
[3] Investigation of Transmission Wave Shape/Noise 151
[4] Troubleshooting Principal Parts 154
[5] Refrigerant Leak 166
[6] Servicing the HBC controller 168
[7] Instructions for debris removal operation 170
[8] Instructions for the air vent operation 171
[9] Instructions for the water pump replacement 172

IX LED Monitor Display on the Outdoor Unit Board

[1] How to Read the LED on the Service Monitor 191

Ⅰ Read Before Servicing

[1] Read Before Servicing 3
[2] Necessary Tools and Materials 4
[3] Piping Materials 5
[4] Storage of Piping 6
[5] Pipe Processing 6
[6] Brazing 7
[7] Air Tightness Test (Refrigerant Circuit) 8
[8] Vacuum Drying (Evacuation) (Refrigerant Circuit) 9
[9] Refrigerant Charging 11
[10] Remedies to be taken in case of a Refrigerant Leak 11
[11] Characteristics of the Conventional and the New Refrigerants 12
[12] Notes on Refrigerating Machine Oil 13
[13] Water piping 14

[1] Read Before Servicing

1. **Check the type of refrigerant used in the system to be serviced.**
   Refrigerant Type
   Multi air conditioner for building application TURYP/E series: R410A
   TQRYP series: R410A

   ∗ Refer to the relevant Service Handbook for maintenance information about the respective outdoor units and heat-source units.

2. **Check the symptoms exhibited by the unit to be serviced.**
   Refer to this service handbook for symptoms relating to the refrigerant cycle.

3. **Thoroughly read the safety precautions at the beginning of this manual.**

4. **Preparing necessary tools: Prepare a set of tools to be used exclusively with each type of refrigerant.**
   Refer to "Necessary Tools and Materials" for information on the use of tools.(page 4)

5. **Verification of the connecting pipes: Verify the type of refrigerant used for the unit to be moved or replaced.**
   - Use refrigerant pipes made of phosphorus deoxidized copper. Keep the inner and outer surfaces of the pipes clean and free of such contaminants as sulfur, oxides, dust, dirt, shaving particles, oil, and water.
   - These types of contaminants inside the refrigerant pipes may cause the refrigerant oil to deteriorate.

6. **If there is a leak of gaseous refrigerant and the remaining refrigerant is exposed to an open flame, a poisonous gas hydrofluoric acid may form. Keep workplace well ventilated.**

> ⚠ **CAUTION**
> - Install new pipes immediately after removing old ones to keep moisture out of the refrigerant circuit.
> - The use of refrigerant that contains chloride, such as R22, will cause the refrigerating machine oil to deteriorate.

7. **Specifications and system requirements may differ for products manufactured at different times. Refer to the relevant chapters for specification details. Production periods can be found from the serial number as follows.**

8XW○○○ ···

- X: 1~9: Jan to Sept. / X~Z: Oct to Dec. (Production month)
- 8: 8: April 2018 to March 2019 (Production year)

ex)	8ZP	December	2018
	81P	January	2019
	82P	February	2019
	83P	March	2019
	94P	April	2019

[2] Necessary Tools and Materials

Prepare the following tools and materials necessary for installing and servicing the unit.

Tools for use with R410A (Adaptability of tools that are for use with R22 or R407C)

1. To be used exclusively with R410A (not to be used if used with R22 or R407C)

Tools/Materials	Use	Notes
Gauge Manifold	Evacuation and refrigerant charging	Higher than 5.09MPa[738psi] on the high-pressure side
Charging Hose	Evacuation and refrigerant charging	The hose diameter is larger than the conventional model.
Refrigerant Recovery Cylinder	Refrigerant recovery	
Refrigerant Cylinder	Refrigerant charging	The refrigerant type is indicated. The cylinder is pink.
Charging Port on the Refrigerant Cylinder	Refrigerant charging	The charge port diameter is larger than that of the current port.
Flare Nut	Connection of the unit with the pipes	Use Type-2 Flare nuts.

2. Tools and materials that may be used with R410A with some restrictions

Tools/Materials	Use	Notes
Gas Leak Detector	Gas leak detection	The ones for use with HFC refrigerant may be used.
Vacuum Pump	Vacuum drying	May be used if a check valve adapter is attached.
Flare Tool	Flare processing	Flare processing dimensions for the piping in the system using the new refrigerant differ from those of R22. Refer to the following page(s). [3] Piping Materials
Refrigerant Recovery Equipment	Refrigerant recovery	May be used if compatible with R410A.

3. Tools and materials that are used with R22 or R407C that may also be used with R410A

Tools/Materials	Use	Notes
Vacuum Pump with a Check Valve	Vacuum drying	
Bender	Bending pipes	
Torque Wrench	Tightening flare nuts	Only the flare processing dimensions for pipes that have a diameter of ø12.7 (1/2") and ø15.88 (5/8") have been changed.
Pipe Cutter	Cutting pipes	
Welder and Nitrogen Cylinder	Welding pipes	
Refrigerant Charging Meter	Refrigerant charging	
Vacuum Gauge	Vacuum level check	

4. Tools and materials that must not be used with R410A

Tools/Materials	Use	Notes
Charging Cylinder	Refrigerant charging	Prohibited to use
Tools containing abrasive materials	Pipe cutting, cut edge treatment	Prohibited to use

Tools for R410A must be handled with special care to keep moisture and dust from infiltrating the cycle.

[3] Piping Materials

Do not use the existing piping!

1. Copper pipe materials

Annealed	Soft copper pipes (annealed copper pipes). They can easily be bent with hands.
Drawn	Hard copper pipes (straight pipes). They are stronger than the Annealed at the same radial thickness.

- The distinction between Annealed and Drawn is made based on the strength of the pipes themselves.
- Annealed can easily be bent with hands.
- Drawn are considerably stronger than Annealed at the same thickness.

2. Types of copper pipes

Maximum working pressure	Refrigerant type
3.45 MPa [500psi]	R22, R407C etc.
4.30 MPa [624psi]	R410A etc.

3. Piping materials/Radial thickness
Select piping materials that meet the requirements set forth in ASTM B280.

4. Thickness and refrigerant type indicated on the piping materials
Ask the pipe manufacturer for the symbols indicated on the piping material for refrigerant R410A.

5. Flare processing
Select piping materials that meet the requirements set forth in ASTM.

6. Flare nut
Select piping materials that meet the requirements set forth in ASTM.

[4] Storage of Piping

1. Storage location

Store the pipes to be used indoors. (Warehouse at site or owner's warehouse)
If they are left outdoors, dust, dirt, or moisture may infiltrate and contaminate the pipe.

2. Sealing the pipe ends

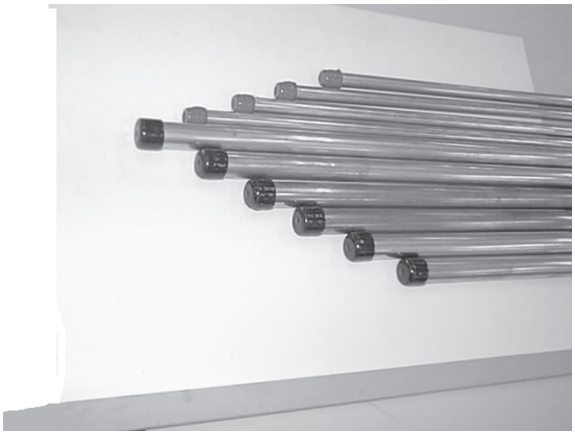

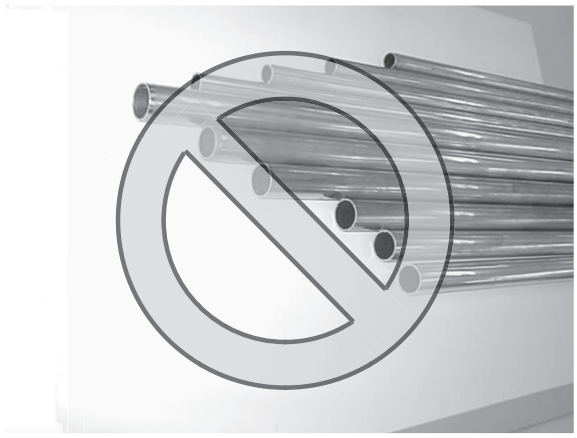

Both ends of the pipes should be sealed until just before brazing.
Keep elbow pipes and T-joints in plastic bags.

Refrigerant oil is highly hygroscopic and is likely to degrade and cause compressor failure if moisture infiltrates into the system. Storage of piping materials requires stringent management.

[5] Pipe Processing

Use a small amount of ester oil, ether oil, or alkylbenzene to coat flares and flanges.
Prevent the particles that are generated during pipe cutting or cut edge treatment from entering the pipes. If abrasive materials contained in sandpaper or cutting tools enter the refrigerant circuit, they may cause the compressor, valves, or other refrigerant circuit components to fail.

Note

- Use a minimum amount of oil.
- Use only ester oil, ether oil, and alkylbenzene.
- To deburr pipes, use a reamer or other deburring tools, not sandpaper.
- To cut pipes, use a pipe cutter, not a grinder or other tools that use abrasive materials.
- When cutting or deburring pipes, do not allow cutting chips or other foreign matters to enter the pipes.
- If cutting chips or other foreign matters enter pipes, wipe them off the inside of the pipes.

[6] Brazing

No changes have been made in the brazing procedures. Perform brazing with special care to keep foreign objects (such as oxide scale, water, and dust) out of the refrigerant system.

Example: Inside the brazed connection

Use of oxidized solder for brazing

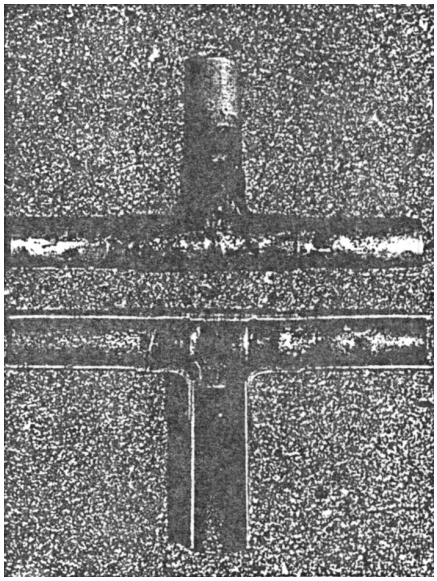

Use of non-oxidized solder for brazing

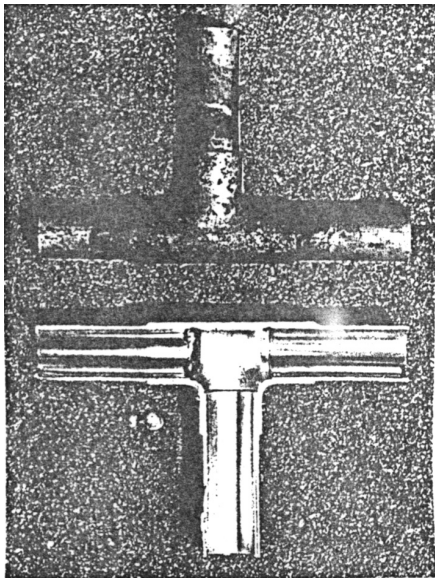

1. Items to be strictly observed

- Do not conduct refrigerant piping work outdoors if raining.
- Use non-oxidized solder.
- Use a brazing material (BCuP-3) that requires no flux when brazing between copper pipes or between a copper pipe and copper coupling.
- If installed refrigerant pipes are not immediately connected to the equipment, then braze and seal both ends.

2. Reasons

- Refrigerant oil is highly hygroscopic and is likely to cause unit failure if moisture infiltrates into the system.
- Residual flux in the refrigerant circuit will cause sludge to form.

3. Notes

Do not use commercially available antioxidants because they may cause the pipes to corrode or refrigerating machine oil to deteriorate.

[7] Air Tightness Test (Refrigerant Circuit)

Note that a refrigerant leak detector for R22 will not detect an R410A leak.

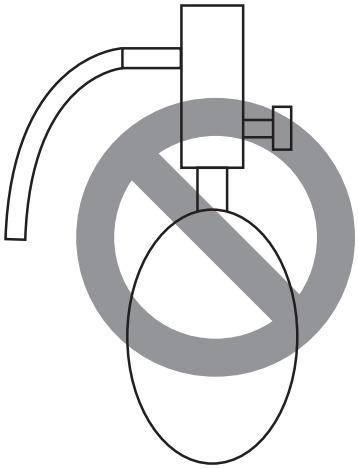

Halide torch

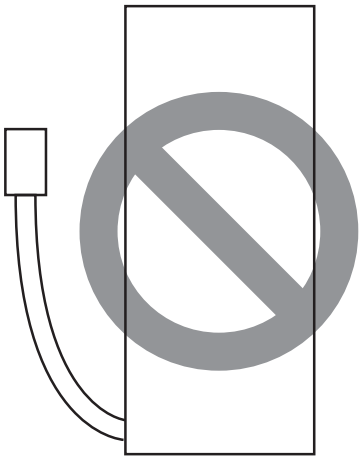

R22 leakage detector

1. **Items to be strictly observed**
   - Pressurize the equipment with nitrogen up to the design pressure (4.15MPa[601psi]), and then judge the equipment's air tightness, taking temperature variations into account.
   - Refrigerant R410A must be charged in its liquid state (vs. gaseous state).

2. **Reasons**
   - Oxygen, if used for an air tightness test, poses a risk of explosion. (Only use nitrogen to check air tightness.)
   - Refrigerant R410A must be charged in its liquid state. If gaseous refrigerant in the cylinder is drawn out first, the composition of the remaining refrigerant in the cylinder will change and become unsuitable for use.

3. **Notes**
   Procure a leak detector that is specifically designed to detect an HFC leak. A leak detector for R22 will not detect an HFC(R410A) leak.

[8] Vacuum Drying (Evacuation) (Refrigerant Circuit)

(Photo1) 15010H

(Photo2) 14010

Recommended vacuum gauge:
ROBINAIR 14010 Thermistor Vacuum Gauge

1. **Vacuum pump with a reverse-flow check valve (Photo1)**
   To prevent the vacuum pump oil from flowing into the refrigerant circuit during power OFF or power failure, use a vacuum pump with a reverse-flow check valve.
   A reverse-flow check valve may also be added to the vacuum pump currently in use.

2. **Standard of vacuum degree (Photo 2)**
   Use a vacuum pump that attains 0.5 Torr (65 Pa) or lower degree of vacuum after 5 minutes of operation, and connect it directly to the vacuum gauge. Use a pump well-maintained with an appropriate lubricant. A poorly maintained vacuum pump may not be able to attain the desired degree of vacuum.

3. **Required precision of vacuum gauge**
   Use a vacuum gauge that registers a vacuum degree of 5 Torr (650 Pa) and measures at intervals of 1 Torr (130 Pa).
   (A recommended vacuum gauge is shown in Photo2.)
   Do not use a commonly used gauge manifold because it cannot register a vacuum degree of 5 Torr (650 Pa).

4. **Evacuation time**
   - After the degree of vacuum has reached 5 Torr (650 Pa), evacuate for an additional 1 hour. (A thorough vacuum drying removes moisture in the pipes.) When the outside temperature drops below 1°C (or when the saturation pressure drops below 656 Pa), continue vacuum drying for another 1 hour after the vacuum degree has reached the saturated vapor pressure of the water (ice) at the outside temperature. When performing vacuum drying at a low outside temperature, use a vacuum gauge appropriate for the temperature range.

   Degree of vacuum (reference)

Outdoor temp.	-20°C (-4°F)	-15°C (5°F)	-10°C (14°F)	-5°C (23°F)	0°C (32°F)
Degree of vacuum	0.77 Torr (103 Pa)	1.24 Torr (165 Pa)	1.95 Torr (260 Pa)	3.01 Torr (402 Pa)	4.58 Torr (611 Pa)

   * Degrees of vacuum shown above are obtained based on the saturated vapor pressure of ice.
   * In a system using water heat exchangers, circulate water to prevent the water in the heat exchangers from freezing during vacuum drying.

   - Verify that the vacuum degree has not risen by more than 1 Torr (130 Pa) 1hour after evacuation. A rise by less than 1 Torr (130 Pa) is acceptable.
   - If the vacuum is lost by more than 1 Torr (130 Pa), conduct evacuation, following the instructions in section 6. Special vacuum drying.

5. **Procedures for stopping vacuum pump**
   To prevent the reverse flow of vacuum pump oil, open the relief valve on the vacuum pump side, or draw in air by loosening the charge hose, and then stop the operation.
   The same procedures should be followed when stopping a vacuum pump with a reverse-flow check valve.

6. Special vacuum drying

- When 5 Torr (650 Pa) or lower degree of vacuum cannot be attained after 3 hours of evacuation, it is likely that water has penetrated the system or that there is a leak.
- If water infiltrates the system, break the vacuum with nitrogen. Pressurize the system with nitrogen gas to 0.5 kgf/cm^{2}G (0.05 MPa) and evacuate again. Repeat this cycle of pressurizing and evacuation either until the degree of vacuum below 5 Torr (650 Pa) is attained or until the pressure stops rising.
- Only use nitrogen gas for vacuum breaking. (The use of oxygen may result in an explosion.)

7. Triple Evacuation

The method below can also be used to evacuate the system.

- Evacuate the system to 4 Torr (520 Pa) from both service valves. System manifold gauges must not be used to measure vacuum. A micron gauge must be used at all times. Break the vacuum with Nitrogen (N2) into the discharge service valve to 0 Torr (0 Pa).
- Evacuate the system to 1.5 Torr (195 Pa) from the suction service valve. Break the vacuum with Nitrogen (N2) into the discharge service valve to 0 Torr (0 Pa).
- Evacuate the system to 0.5 Torr (65 Pa). System must hold the vacuum at 0.5 Torr (65 Pa) for a minimum of 1 hour.
- Conduct a rise test for a minimum of 30 minutes

8. Notes

- **To evacuate air from the entire system**
  Applying a vacuum through the check joints at the refrigerant service valve on the high and low pressure sides (BV1 and 2) is not enough to attain the desired vacuum pressure.
  Be sure to apply a vacuum through the check joints at the refrigerant service valve on the high and low pressure sides (BV1 and 2) and also through the check joints on the high and low pressure sides (CJ1 and 2).
- **To evacuate air only from the outdoor units**
  Apply a vacuum through the check joints on the high and low pressure sides (CJ1, and 2).
- **To evacuate air from the indoor units and extension pipes**
  Apply a vacuum through the check joints at the refrigerant service valve on the high and low pressure sides (BV1 and 2).

[9] Refrigerant Charging

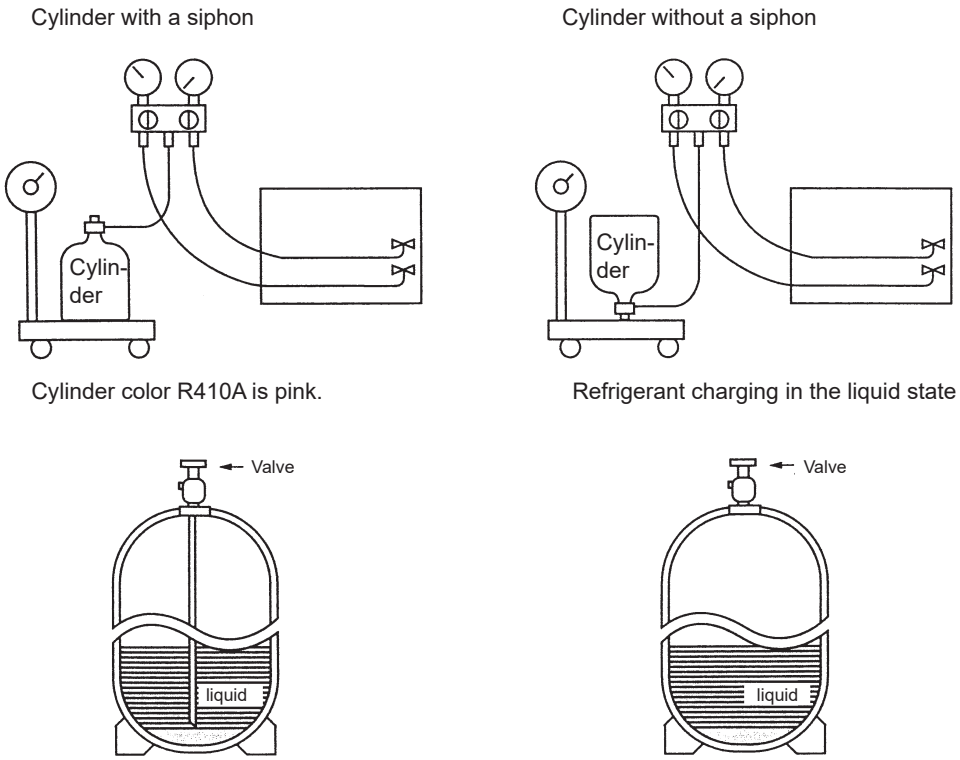

1. **Reasons**
   R410A is a pseudo-azeotropic HFC blend (boiling point R32=-52°C[-62°F], R125=-49°C[-52°F]) and can almost be handled the same way as a single refrigerant, such as R22. To be safe, however, draw out the refrigerant from the cylinder in the liquid phase. If the refrigerant in the gaseous phase is drawn out, the composition of the remaining refrigerant will change and become unsuitable for use.

2. **Notes**
   When using a cylinder with a siphon, refrigerant is charged in the liquid state without the need for turning it upside down. Check the type of the cylinder on the label before use.
   If the refrigerant leaks out, it may be replenished. The entire refrigerant does not need to be replaced. (Charge refrigerant in the liquid state.)
   Refer to the following page(s). [VIII [5] Refrigerant Leak]

[10] Remedies to be taken in case of a Refrigerant Leak

If the refrigerant leaks out, it may be replenished. The entire refrigerant does not need to be replaced. (Charge refrigerant in the liquid state.)
Refer to the following page(s). [VIII [5] Refrigerant Leak.

[11] Characteristics of the Conventional and the New Refrigerants

1. Chemical property

As with R22, R410A is low in toxicity and chemically stable nonflammable refrigerant.
However, because the specific gravity of vapor refrigerant is greater than that of air, leaked refrigerant in a closed room will accumulate at the bottom of the room and may cause hypoxia.
If exposed to an open flame, refrigerant will generate poisonous gases. Do not perform installation or service work in a confined area.

	HFC Refrigerant		HCFC Refrigerant
	R410A	R407C	R22
	R32/R125	R32/R125/R134a	R22
Composition (wt%)	(50/50)	(23/25/52)	(100)
Type of Refrigerant	Pseudo-azeotropic Refrigerant	Non-azeotropic Refrigerant	Single Refrigerant
Chloride	Not included	Not included	Included
Safety Class	A1/A1	A1/A1	A1
Molecular Weight	72.6	86.2	86.5
Boiling Point (°C/°F)	-51.4/-60.5	-43.6/-46.4	-40.8/-41.4
Steam Pressure (25°C,MPa/77°F,psi) (gauge)	1.557/226	0.9177/133	0.94/136
Saturated Steam Density (25°C,kg/m^3/77°F,psi)	64.0	42.5	44.4
Flammability	Nonflammable	Nonflammable	Nonflammable
Ozone Depletion Coefficient (ODP)*1	0	0	0.055
Global Warming Coefficient (GWP)*2	2088	1774	1810
Refrigerant Charging Method	Refrigerant charging in the liquid state	Refrigerant charging in the liquid state	Refrigerant charging in the gaseous state
Replenishment of Refrigerant after a Refrigerant Leak	Available	Available	Available

*1 When CFC11 is used as a reference
*2 When CO_2 is used as a reference

2. Refrigerant composition

R410A is a pseudo-azeotropic HFC blend and can almost be handled the same way as a single refrigerant, such as R22. To be safe, however, draw out the refrigerant from the cylinder in the liquid phase. If the refrigerant in the gaseous phase is drawn out, the composition of the remaining refrigerant will change and become unsuitable for use.
If the refrigerant leaks out, it may be replenished.

3. Pressure characteristics

The pressure in the system using R410A is 1.6 times as great as that in the system using R22.

Temperature (°C/°F)	Pressure (gauge)		
	R410A	R407C	R22
	MPa/psi	MPa/psi	MPa/psi
-20/-4	0.30/44	0.18/26	0.14/20
0/32	0.70/102	0.47/68	0.40/58
20/68	1.34/194	0.94/136	0.81/117
40/104	2.31/335	1.44/209	1.44/209
60/140	3.73/541	2.44/354	2.33/338
65/149	4.17/605	2.75/399	2.60/377

[12] Notes on Refrigerating Machine Oil

1. Refrigerating machine oil in the HFC refrigerant system

HFC type refrigerants use a refrigerating machine oil different from that used in the R22 system.
Note that the ester oil used in the system has properties that are different from commercially available ester oil.

Refrigerant	Refrigerating machine oil
R22	Mineral oil
R407C	Ester oil
R410A	Ester oil

2. Effects of contaminants*1

Refrigerating machine oil used in the HFC system must be handled with special care to keep contaminants out.
The table below shows the effect of contaminants in the refrigerating machine oil on the refrigeration cycle.

3. The effects of contaminants in the refrigerating machine oil on the refrigeration cycle.

<table>
<tr><th colspan="2">Cause</th><th colspan="2">Symptoms</th><th>Effects on the refrigerant cycle</th></tr>
<tr><td colspan="2" rowspan="3">Water infiltration</td><td></td><td>Frozen expansion valve and capillary tubes</td><td rowspan="4">Clogged expansion valve and capillary tubes
Poor cooling performance
Compressor overheat
Motor insulation failure
Burnt motor
Coppering of the orbiting parts
Lock
Burn-in on the orbiting parts</td></tr>
<tr><td>Hydrolysis</td><td rowspan="2">Sludge formation and adhesion
Acid generation
Oxidization
Oil degradation</td></tr>
<tr><td colspan="2">Air infiltration</td><td>Oxidization</td></tr>
<tr><td rowspan="4">Infiltration of contaminants</td><td rowspan="2">Dust, dirt</td><td colspan="2">Adhesion to expansion valve and capillary tubes</td><td>Clogged expansion valve, capillary tubes, and drier
Poor cooling performance
Compressor overheat</td></tr>
<tr><td colspan="2">Infiltration of contaminants into the compressor</td><td>Burn-in on the orbiting parts</td></tr>
<tr><td rowspan="2">Mineral oil etc.</td><td colspan="2">Sludge formation and adhesion</td><td>Clogged expansion valve and capillary tubes
Poor cooling performance
Compressor overheat</td></tr>
<tr><td colspan="2">Oil degradation</td><td>Burn-in on the orbiting parts</td></tr>
</table>

*1. Contaminants is defined as moisture, air, processing oil, dust/dirt, wrong types of refrigerant, and refrigerating machine oil.

[13] Water piping

1. Precautions for water piping

Consider the following when installing a water piping system.

(1) Design pressure of the water piping

Use a water pipe that can withstand pressure of at least 1.0 MPa.

(2) Water pipe type

Use of plastic pipe is recommended. Do not use chloride plastic pipes.
When using copper pipes, be sure to braze the pipes under a nitrogen purge. (Oxidation during may shorten the life of the pump.) Do not use steel or stainless steel pipes.

(3) Expansion tank

Install an expansion tank to accommodate expanded water.

(4) Drain piping

Install the drain pipe with a downward inclination of more than 1/100. To prevent drain water from freezing in winter, install the drain pipe as steep an angle as practically possible and minimize the straight line. For cold climate installation, take an appropriate measure (e.g., drain heater) to prevent the drain water from freezing.

(5) Insulation

Cover the water pipe with insulating materials with the specified thickness or more to prevent thermal loss or condensation from collecting.

(6) Air vent valve

Install air vent valves to the highest places where air can accumulate.

(7) Maintenance valve

It is recommended to install valves on the inlet/outlet for each HBC controller branch for maintenance.

(8) Water pressure gauge

Install a water pressure gauge to check the charged pressure.

(9) Water pipe connection

When connecting to water pipe, be sure to make the connection in accordance with the relevant local laws and regulations.

2. Notes on corrosion

(1) Water quality

It is important to check the water quality beforehand. See table below (Circulating water/Makeup Water Quality Standards).

Items		Lower mid-range temperature water system		Tendency	
		Recirculating water [20<T<60°C] [68<T<140°F]	Make-up water	Corrosive	Scale-forming
Standard items	pH (25°C[77°F])	7.0 ~ 8.0	7.0 ~ 8.0	○	○
	Electric conductivity (mS/m) (25°C[77°F]) (μS/cm) (25°C[77°F])	30 or less [300 or less]	30 or less [300 or less]	○	○
	Chloride ion (mg Cl^-/ℓ)	50 or less	50 or less	○	
	Sulfate ion (mg SO_4^{2-}/ℓ)	50 or less	50 or less	○	
	Acid consumption (pH4.8) (mg $CaCO_3$/ℓ)	50 or less	50 or less		○
	Total hardness (mg $CaCO_3$/ℓ)	70 or less	70 or less		○
	Calcium hardness (mg $CaCO_3$/ℓ)	50 or less	50 or less		○
	Ionic silica (mg SiO_2/ℓ)	30 or less	30 or less		○
Reference items	Iron (mg Fe/ℓ)	1.0 or less	0.3 or less	○	○
	Copper (mg Cu/ℓ)	1.0 or less	0.1 or less	○	
	Sulfide ion (mg S^{2-}/ℓ)	not to be detected	not to be detected	○	
	Ammonium ion (mg NH_4^+/ℓ)	0.3 or less	0.1 or less	○	
	Residual chlorine (mg Cl/ℓ)	0.25 or less	0.3 or less	○	
	Free carbon dioxide (mg CO_2/ℓ)	0.4 or less	4.0 or less	○	
	Ryzner stability index	–	–	○	○

Reference : Guideline of Water Quality for Refrigeration and Air Conditioning Equipment. (JRA GL02E-1994)

(2) Debris in the water

Sand, pebbles, suspended solids, and corrosion products in water can damage the metal pipe and heat exchanger on the HBC controller and may cause corrosion. When installing, prevent debris from entering the water. If there is debris in the water, perform debris removal operation after test run by cleaning the strainers inside the HBC controller. (Refer to other sections for how to perform a test run.)

(3) Connecting pipes made of different materials

Connecting pipes used for HBC controller and indoor unit are copper alloy pipes. If steel pipes are connected tothe pipes, the contact surface will corrode. Do not use steel pipes to avoid corrosion.

(4) Residual air

Residual air in the pipe results in water pump malfunction, noise, or water pipe corrosion in the water circuit. Ensure air is purged before use. (Refer to other sections for how to perform air vent operation.)

3. Correction by antifreeze-liquid concentration

In HYBRID CITY MULTI system, antifreeze-liquid should be used to prevent the system from freezing. Refer to the following graphs for the capacity correction by antifreeze-liquid. Refer to (1) for antifreeze-liquid concentration, (2) and (3) for capacity correction by antifreeze-liquid concentration.
When adding antifreeze-liquid, be sure to perform the process in accordance with the relevant local laws and regulations.

(1) Antifreeze-liquid concentration

Use propylene glycol solution for antifreeze.
Refer to the following graph to estimate the antifreeze-liquid concentration required for freeze protection.

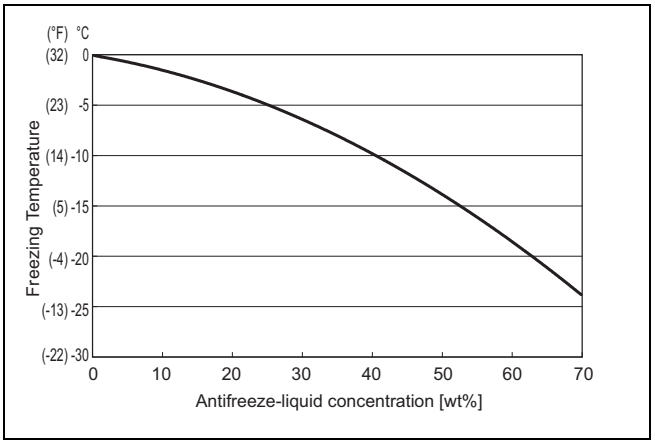

(2) Capacity correction by antifreeze-liquid concentration (cooling)

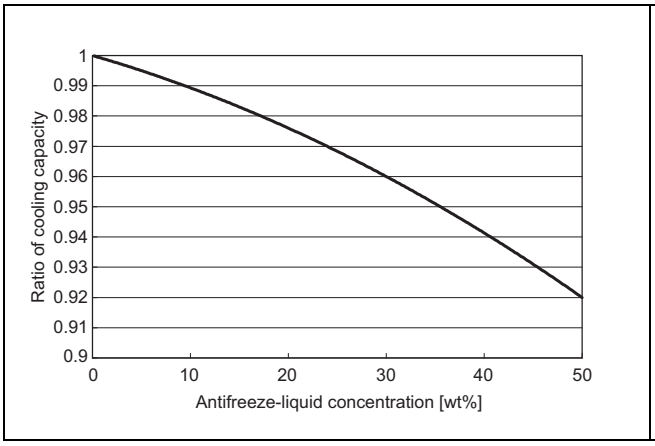

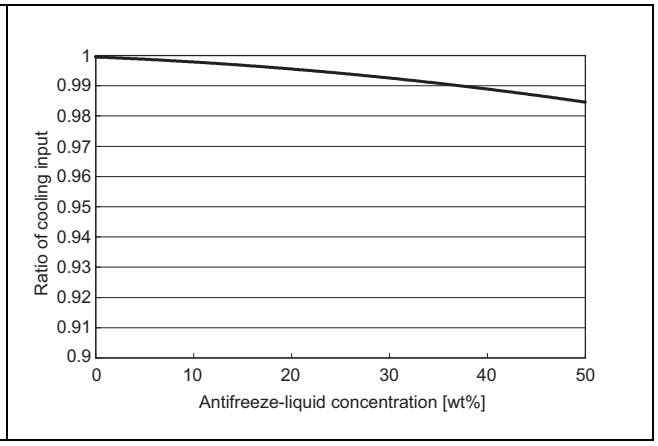

(3) Capacity correction by antifreeze-liquid concentration (heating)

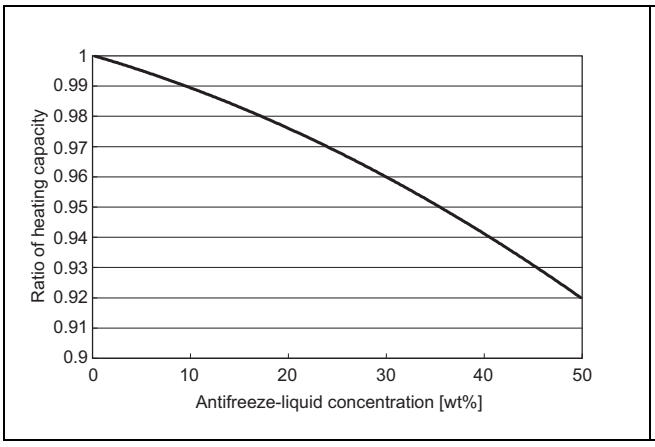

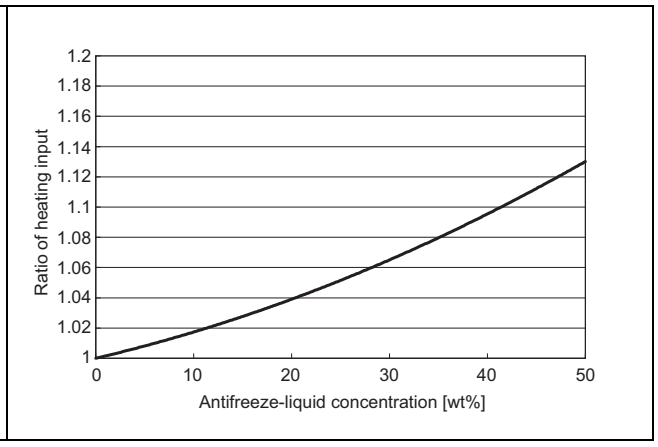

II Restrictions

[1] System configuration 19
[2] Switch Settings and Address Settings 21
[3] An Example of a System to which an MA Remote Controller is connected..... 23
[4] An Example of a System to which an ME Remote Controller is connected..... 29
[5] An Example of a System to which both MA Remote Controller and
ME Remote Controller are connected..... 31
[6] Restrictions on Pipe Length 34

[1] System configuration

1. Table of compatible indoor units

The table below summarizes the types of indoor units that are compatible with different types of outdoor units.

(1) Standard combinations

Outdoor units	HBC controller Sub-HBC controller	Maximum total capacity of connectable indoor units	Maximum number of connectable indoor units	Types of connectable indoor units
TURYP072	TCMBM0108VA11N4, TCMBM1016VA11N4 TCMBS0108VB11N4, TCMBS1016VB11N4	36-108	18	W06-W48 models Indoor units for use with HBC controller
TURYP096		48-144	24	
TURYP120		60-180	30	
TURYP144		72-216	36	
TURYP168		84-252	42	

Note

1) "Maximum total capacity of connectable indoor units" refers to the sum of the numeric values in the indoor unit model names.
2) If the total capacity of the indoor units that are connected to a given outdoor unit exceeds the capacity of the outdoor unit, the indoor units will not be able to perform at the rated capacity when they are operated simultaneously. Select a combination of units so that the total capacity of the connected indoor units is at or below the capacity of the outdoor unit whenever possible.
3) TURYP144 model or larger requires a connection of two main HBC controllers in parallel.

(2) High COP combinations

Outdoor units	HBC controller Sub-HBC controller	Maximum total capacity of connectable indoor units	Maximum number of connectable indoor units	Types of connectable indoor units
TURYE072	TCMBM0108VA11N4, TCMBM1016VA11N4 TCMBS0108VB11N4, TCMBS1016VB11N4	36-108	18	W06-W48 models Indoor units for use with HBC controller
TURYE096		48-144	24	
TURYE120		60-180	30	
TURYE144		72-216	36	
TURYE168		84-252	42	

Note

1) "Maximum total capacity of connectable indoor units" refers to the sum of the numeric values in the indoor unit model names.
2) If the total capacity of the indoor units that are connected to a given outdoor unit exceeds the capacity of the outdoor unit, the indoor units will not be able to perform at the rated capacity when they are operated simultaneously. Select a combination of units so that the total capacity of the connected indoor units is at or below the capacity of the outdoor unit whenever possible.
3) TURYE144 model or larger requires a connection of two main HBC controllers in parallel.

(3) WR2 combinations

Outdoor units	HBC controller Sub-HBC controller	Maximum total capacity of connectable indoor units	Maximum number of connectable indoor units	Types of connectable indoor units
TQRYP072	TCMBM0108VA11N4, TCMBM1016VA11N4 TCMBS0108VB11N4, TCMBS1016VB11N4	36-108	18	W06-W48 models Indoor units for use with HBC controller
TQRYP096		48-144	24	
TQRYP120		60-180	30	
TQRYP144		72-216	36	
TQRYP168		84-252	42	

Note

1) "Maximum total capacity of connectable indoor units" refers to the sum of the numeric values in the indoor unit model names.
2) If the total capacity of the indoor units that are connected to a given outdoor unit exceeds the capacity of the outdoor unit, the indoor units will not be able to perform at the rated capacity when they are operated simultaneously. Select a combination of units so that the total capacity of the connected indoor units is at or below the capacity of the outdoor unit whenever possible.
3) TQRYP144 model or larger requires a connection of two main HBC controllers in parallel.

[2] Switch Settings and Address Settings

1. Switch setting

Refer to section "[3] An Example of a System to which an MA Remote Controller is connected - [5] An Example of a System to which both MA Remote Controller and ME Remote Controller are connected" before performing wiring work.
Set the switches while the power is turned off.
If the switch settings are changed while the unit is being powered, those changes will not take effect, and the unit will not function properly.

Units on which to set the switches		Symbol	Units to which the power must be shut off
CITY MULTI indoor unit	Main/sub unit	IC	Outdoor units *1 and Indoor units
LOSSNAY *1		LC	Outdoor units and LOSSNAY
ME remote controller	Main/sub remote controller	RC	Outdoor units *1
MA remote controller	Main/sub remote controller	MA	Indoor units
CITY MULTI outdoor unit (Heat source unit)		OC	Outdoor units *1
HBC controller, Sub-HBC controller		HB, HS	Outdoor units *1, HBC controller, and Sub-HBC controller

*1. Turn off the power to all the outdoor units in the same refrigerant circuit.

2. M-NET Address settings

(1) Address settings table

The need for address settings and the range of address setting depend on the configuration of the system.

Unit or controller		Symbol	Address setting range	Setting method	Factory address setting
CITY MULTI indoor unit	Main/sub unit	IC	0, 01 to 50*1 *4 *5 *6	Assign the smallest address to the main indoor unit in the group, and assign sequential address numbers to the rest of the indoor units in the same group.	00
M-NET adapter					
M-NET control interface					
Free Plan adapter					
LOSSNAY, OA processing unit		LC	0, 01 to 50*1 *4 *5 *6	Assign an arbitrary but unique address to each of these units after assigning an address to all indoor units.	00
ME remote controller	Main remote controller	RC	101 to 150	Add 100 to the smallest address of all the indoor units in the same group.	101
	Sub remote controller	RC	151 to 200*3	Add 150 to the smallest address of all the indoor units in the same group.	
MA remote controller		MA	No address settings required. (The main/sub setting must be made if 2 remote controllers are connected to the system.)		Main
CITY MULTI outdoor unit (Heat source unit)		OC	0, 51 to 100*1*2*5*6	♦Assign an address that equals the lowest address of the indoor units in the same refrigerant circuit plus 50.	00
Auxiliary outdoor unit	HBC controller Sub-HBC controller	HB HS	0, 51 to 100*1 *2 *5	♦Assign an address that equals the lowest address of the indoor units to be connected to the HBC controller or Sub-HBC controller plus 50. ♦If a given address overlaps any of the addresses that are assigned to the other units, use a different, unused address within the setting range.	00
System controller	Group remote controller	GR SC	201 to 250	Assign an address that equals the sum of the smallest group number of the group to be controlled and 200.	201
	System remote controller	SR SC		Assign an arbitrary but unique address within the range listed on the left to each unit.	
	ON/OFF remotecontroller	AN SC		Assign an address that equals the sum of the smallest group number of the group to be controlled and 200.	
	Schedule timer (compatible with M-NET)	ST SC		Assign an arbitrary but unique address within the range listed on the left to each unit.	202
	Central controller AG-150A GB-50ADA G(B)-50A	TR SC	0, 201 to 250	Assign an arbitrary but unique address within the range listed on the left to each unit. The address must be set to "0" to control the K-control unit.	000
	LM adapter	SC	201 to 250	Assign an arbitrary but unique address within the range listed on the left to each unit.	247

*1. If a given address overlaps any of the addresses that are assigned to other units, use a different, unused address within the setting range.
*2. To set the outdoor unit address or the auxiliary outdoor unit address to "100," set the rotary switches to "50."
*3. To set the ME remote controller address to "200," set the rotary switches to "00."
*4. Some models of indoor units have two or three control boards.
Assign an address to the No.1, No. 2, and No. 3 control boards so that the No. 2 control board address equals the No. 1 control board address plus 1, and that the No. 3 control board address equals the No. 1 control board address plus 2.
*5. No address settings are required for units in a system with a single outdoor unit (with some exceptions).
Address setting is required if multiple HBC controllers or a sub HBC controller is connected.
*6. If a given address overlaps any of the addresses that are assigned to other units, use a different, unused address within the setting range.

[3] An Example of a System to which an MA Remote Controller is connected

1. System with one outdoor unit (Heat source unit) (automatic address setup for both indoor and outdoor units)

(1) Sample control wiring

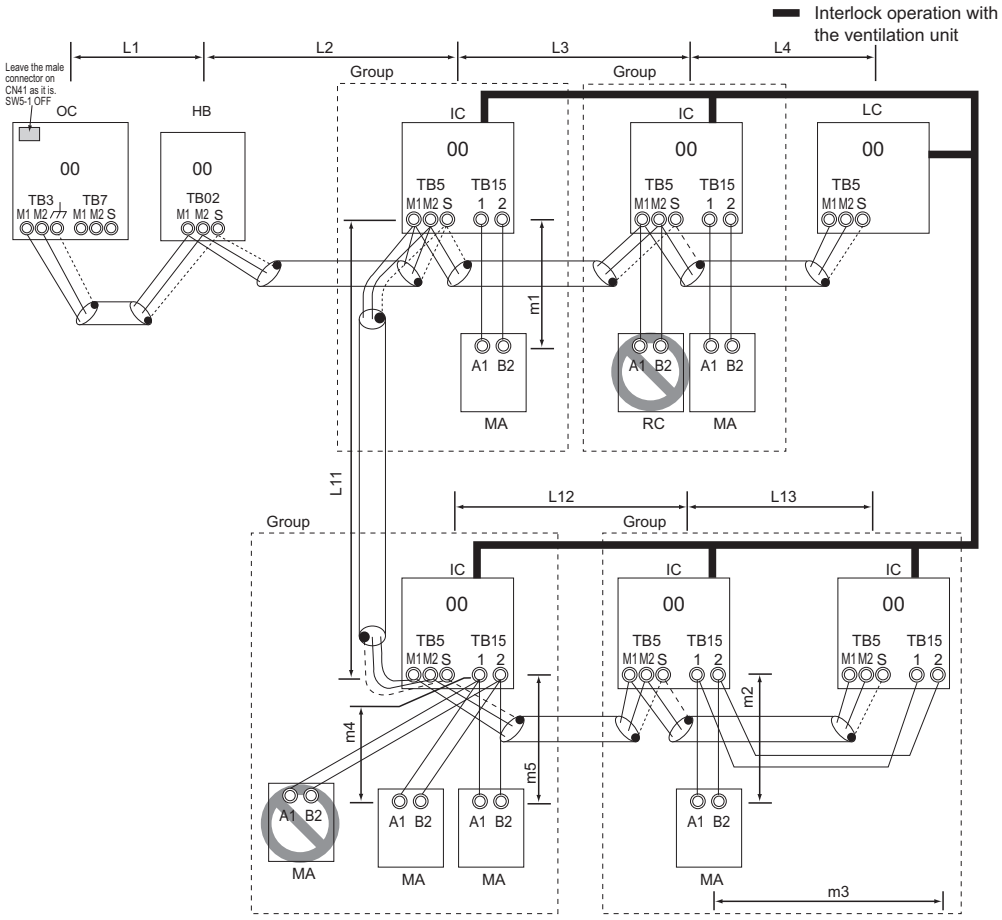

(2) Cautions

1) ME remote controller and MA remote controller cannot both be connected to the same group of indoor units.
2) No more than 2 MA remote controllers can be connected to a group of indoor units.
3) When the number of the connected indoor units is as shown in the table below, one or more transmission boosters (sold separately) are required.
   To connect two transmission boosters, connect them in parallel. (Observe the maximum number of connectable indoor units that are listed in the specifications for each outdoor unit.)

	Number of transmission booster (sold separately) required	
	1 unit	2 units
When the P72 and P96 models are not included in the connected indoor units	27 - 50 units	-
When the P72 and P96 models are included in the connected indoor units	21 - 39 units	40 - 50 units

4) Automatic address setup is not available if start-stop input(CN32, CN51, CN41) is used for a group operation of indoor units.
5) No more than 2 HBC controllers can be connected. Sub-HBC controller cannot be connected.

(3) Maximum allowable length

1) Indoor/outdoor transmission line
   Maximum distance (1.25mm^2 [AWG16] or larger)
   L1 +L2+L3+L4≤200m[656ft]
   L1 +L2+L11+L12+L13≤200m[656ft]
2) Transmission line for centralized control
   No connection is required.
3) MA remote controller wiring
   Maximum overall line length
   (0.3 to 1.25mm^2 [AWG22 to 16])
   m1≤200m [656ft]
   m2+m3≤200m [656ft]
   m4+m5≤200m [656ft]

(4) Wiring method

1) Indoor/outdoor transmission line

Daisy-chain terminals M1 and M2 of the terminal block for indoor-outdoor transmission line (TB3) on the outdoor unit (OC), of the terminal block for indoor-outdoor transmission line (TB02) on the HBC controller (HB), and of the terminal block for indoor-outdoor transmission line (TB5) on each indoor unit (IC). (Non-polarized two-wire)

- Only use shielded cables.

Shielded cable connection

Daisy-chain the ground terminal (⏚) on the outdoor unit (OC), the S terminal of the terminal block (TB02) on the HBC controller (HB), and the S terminal of the terminal block (TB5) on the indoor unit (IC) with the shield of the shielded cable.

2) Transmission line for centralized control

No connection is required.

3) MA remote controller wiring

Connect terminals 1 and 2 on the terminal block for MA remote controller line (TB15) on the indoor unit (IC) to the terminal block on the MA remote controller (MA). (Non-polarized two-wire)

When 2 remote controllers are connected to the system

When 2 remote controllers are connected to the system, connect terminals 1 and 2 of the terminal block (TB15) on the indoor unit (IC) to the terminal block on the two MA remote controllers.

- Set one of the MA remote controllers as a sub controller. (Refer to the Instruction Manual for the MA remote controller for the setting method.)

Group operation of indoor units

To perform a group operation of indoor units (IC), daisy-chain terminals 1 and 2 on the terminal block (TB15) on all indoor units (IC) in the same group, and then connect terminals 1 and 2 on the terminal block (TB15) on the indoor unit on one end to the terminal block on the MA remotecontroller. (Non-polarized two-wire)

- When performing a group operation of indoor units that have different functions, "Automatic indoor/outdoor addresssetup" is not available.

4) Switch setting

No address settings required.

(5) Address setting method

Procedures	Unit or controller			Address setting range	Setting method	Notes	Factory setting
1	Indoor unit	Main unit	IC	No settings required.	-	Port number setting is required To perform a group operation of indoor units that feature different functions, the automatic IC/OC address setup function is not available.	00
		Sub unit	IC				
2	LOSSNAY		LC	No settings required.	-		00
3	MA remote controller	Main remote controller	MA	No settings required.	-		Main
		Sub remote controller	MA	Sub remote controller	Settings to be made with the Sub/Main switch		
4	Outdoor unit (Heat source unit)		OC	No settings required.	-		00
5	Auxiliary outdoor unit	HBC controller	HB	No settings required.	-		00

2. A system in which a system controller is connected to the transmission line for centralized control and which is powered from an outdoor unit

(1) Sample control wiring

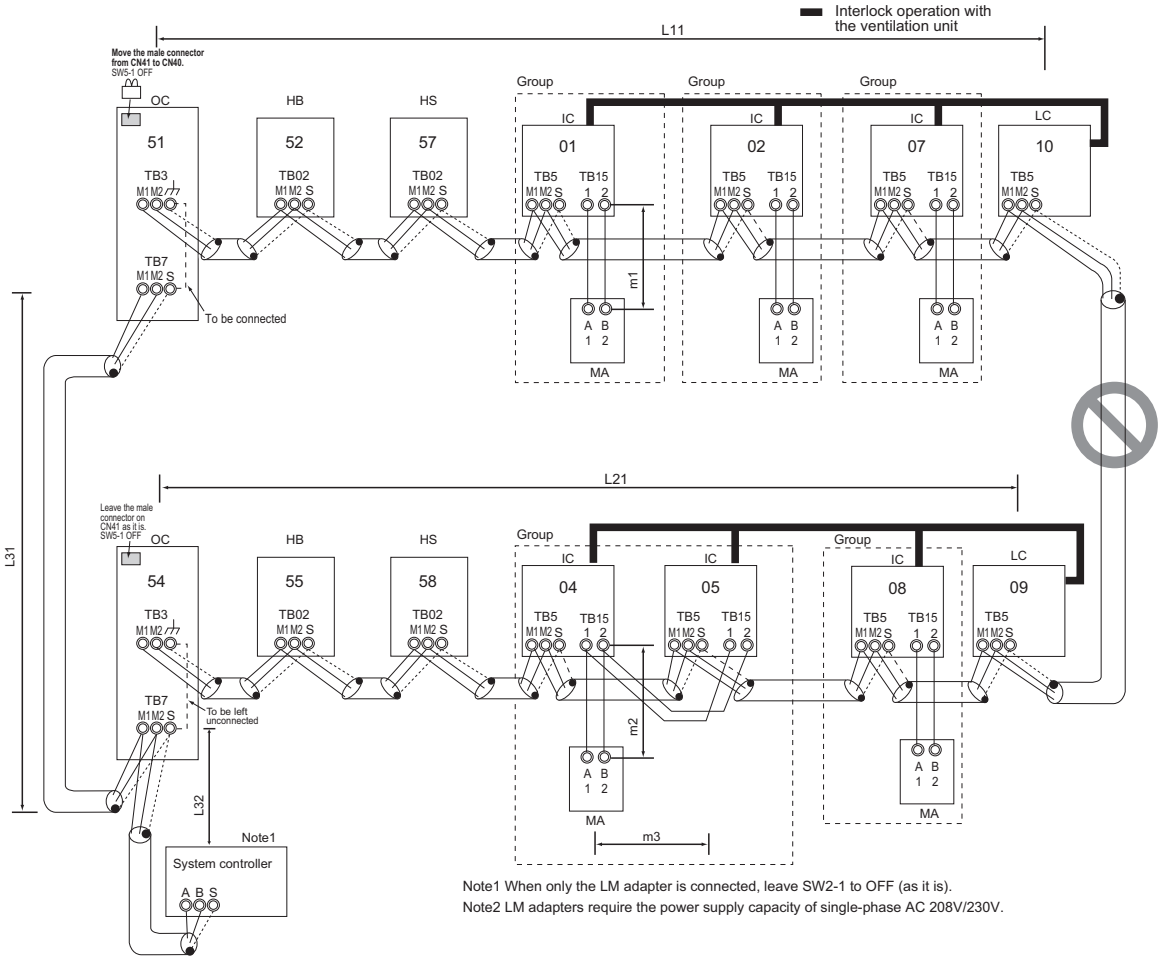

Note1 When only the LM adapter is connected, leave SW2-1 to OFF (as it is).
Note2 LM adapters require the power supply capacity of single-phase AC 208V/230V.

(2) Cautions

1) ME remote controller and MA remote controller cannot both be connected to the same group of indoor units.
2) No more than 2 MA remote controllers can be connected to a group of indoor units.
3) Do not connect the terminal blocks (TB5) on the indoor units that are connected to different outdoor units with each other.
4) Replacement of male power jumper connector (CN41) must be performed only on one of the outdoor units.
(not required if power to the transmission line for centralized control is supplied from a controller with a power-supply function, such as GB-50ADA)
5) Short-circuit the shield terminal (S terminal) and the earth terminal (⏚) on the terminal block for transmission line for centralized control (TB7) on the outdoor unit whose power jumper connector is mated with CN40.
6) When the number of the connected indoor units is as shown in the table below, one or more transmission boosters (sold separately) are required.
To connect two transmission boosters, connect them in parallel.
(Observe the maximum number of connectable indoor units that are listed in the specifications for each outdoor unit.)

	Number of transmission booster (sold separately) required	
	1 unit	2 units
When the P72 and P96 models are not included in the connected indoor units	27 - 50 units	-
When the P72 and P96 models are included in the connected indoor units	21 - 39 units	40 - 50 units

7) When a power supply unit is connected to the transmission line for centralized control, leave the power jumper connector on CN41 as it is (factory setting).

(3) Maximum allowable length

1) Indoor/outdoor transmission line
Maximum distance (1.25mm^2 [AWG16] or larger)
L11≦200m [656ft]
L21≦200m [656ft]
2) Transmission line for centralized control
L31+L32≦200m [656ft]
3) MA remote controller wiring
Same as [3] 1.
4) Maximum line distance via outdoor unit
(1.25mm^2 [AWG16] or larger)
L32+L31+L11≦500m [1640ft]
L32+L21≦500m [1640ft]
L11+L31+L21≦500m[1640ft]

(4) Wiring method

1) Indoor/outdoor transmission line

Daisy-chain terminals M1 and M2 of the terminal block for indoor-outdoor transmission line (TB3) on the outdoor unit (OC), of the terminal block for indoor-outdoor transmission line (TB02) on the HBC controller and Sub-HBC controller (HB and HS), and of the terminal block for indoor-outdoor transmission line (TB5) on each indoor unit (IC). (Non-polarized two-wire)

- Only use shielded cables.

Shielded cable connection

Daisy-chain the ground terminal (⏚) on the outdoor unit (OC), the S terminal of the terminal block (TB02) on HB and HS, and the S terminal of the terminal block (TB5) on the indoor unit (IC) with the shield of the shielded cable.

2) Transmission line for centralized control

Daisy-chain terminals A and B on the system controller, terminals M1 and M2 on the terminal block for transmission line for centralized control (TB7) on the outdoor units (OC) in different refrigerant circuits.
When both of the following conditions are met, move the power jumper connector on the control board from CN41 to CN40 on only one of the outdoor units: (1) No power supply units are connected to the transmission line for centralized control AND (2) No controllers with a power-supply function are connected to the system.
If a system controller is connected, set the central control switch (SW5-1) on the control board of all outdoor units to "ON."

- Only use shielded cables.

Shielded cable connection

Daisy-chain the S terminal of the terminal block (TB7) on the system controller, OC with the shield of the shielded cable. Short-circuit the earth terminal (⏚) and the S terminal on the terminal block (TB7) on the outdoor unit whose power jumper connector is mated with CN40.

3) MA remote controller wiring

Same as [3] 1.

When 2 remote controllers are connected to the system

Same as [3] 1.

Group operation of indoor units

Same as [3] 1.

4) LOSSNAY connection

Connect terminals M1 and M2 on the terminal block (TB5) on the indoor unit (IC) to the appropriate terminals on the terminal block for indoor-outdoor transmission line (TB5) on LOSSNAY (LC). (Non-polarized two-wire)

- Indoor units must be interlocked with the LOSSNAY unit using the system controller. (Refer to the operation manual for the system controller for the setting method.) Interlock setting from the remote controller is required if the ON/OFF remote controller alone or the LM adapter alone is connected.

5) Switch setting

Address setting is required as follows.

(5) Address setting method

Procedures	Unit or controller			Address setting range	Setting method	Notes	Factory setting
1	Indoor unit	Main unit	IC	01 to 50	• Assign the smallest address to the main unit in the group.	• Port number setting is required • To perform a group operation of indoor units that feature different functions, designate the indoor unit in the group with the greatest number of functions as the main unit.	00
		Sub unit			Assign sequential numbers starting with the address of the main unit in the same group +1. (Main unit address +1, main unit address +2, main unit address +3, etc.)		
2	LOSSNAY		LC	01 to 50	Assign an arbitrary but unique address to each of these units after assigning an address to all indoor units.	None of these addresses may overlap any of the indoor unit addresses.	00
3	MA remote controller	Main remote controller	MA	No settings required.	-	Make the same indoor unit group settings with the system controller as the ones that were made with the MA remote controller.	Main
		Sub remote controller	MA	Sub remote controller	Settings to be made with the Sub/Main switch		
4	Outdoor unit (Heat source unit)		OC	51 to 100	Set the address to "the smallest indoor unit address in the same refrigerant circuit system + 50." (If the address is already used, set to a different address within the specified range.)	• To set the address to 100, set the rotary switches to 50. • If the address that is assigned to the HBC controller and Sub-HBC controller overlaps any of the addresses that are assigned to the other units, use a different, unused address within the setting range.	00
5	Auxiliary outdoor unit	HBC controller Sub-HBC controller	HB HS	51 to 100	Assign an address that equals the lowest address of the indoor units to be connected to the HBC controller or Sub-HBC controller plus 50.		

3. An example of a system in which a system controller is connected to the indoor-outdoor transmission line (except LM adapter)

(1) Sample control wiring

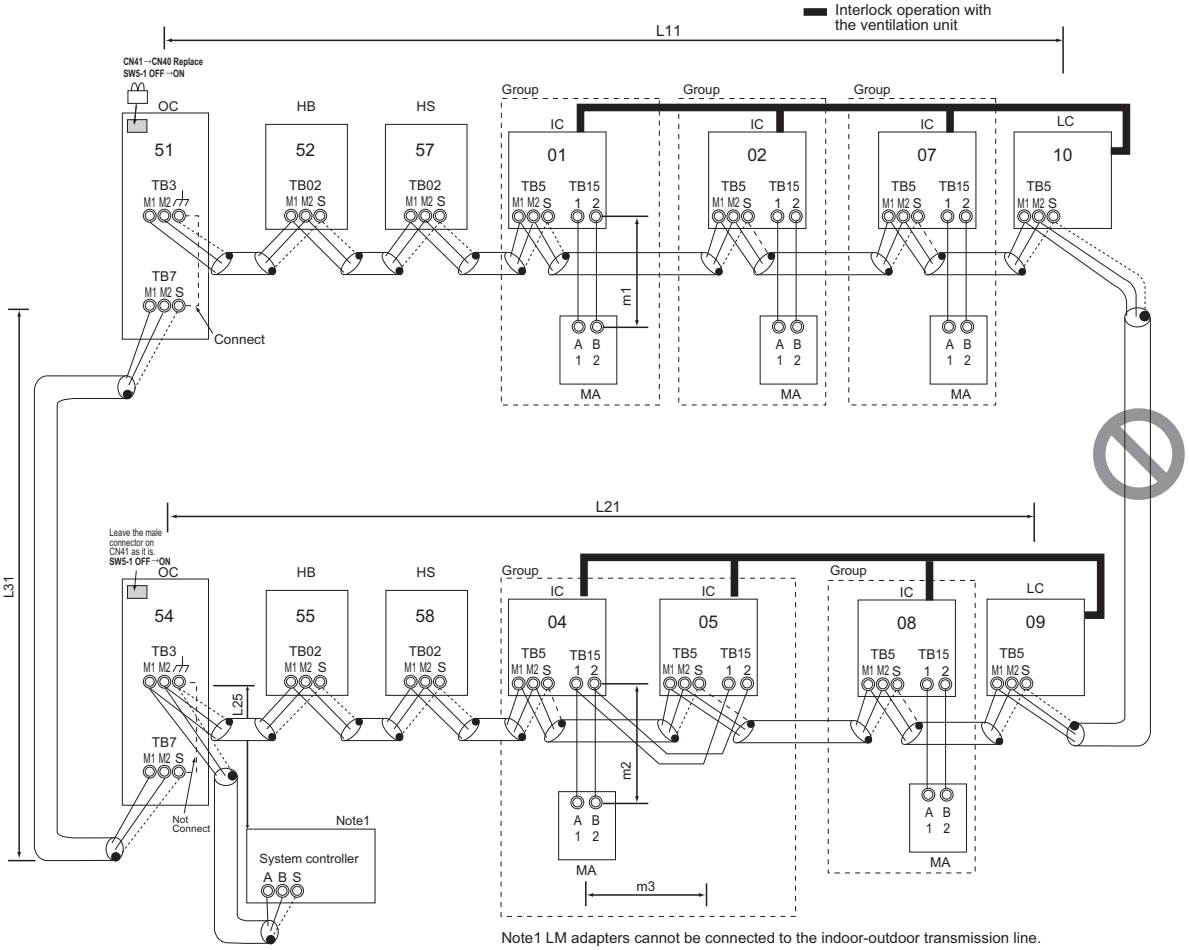

Note1 LM adapters cannot be connected to the indoor-outdoor transmission line.

(2) Cautions

1) ME remote controller and MA remote controller cannot both be connected to the same group of indoor units.
2) No more than 2 MA remote controllers can be connected to a group of indoor units.
3) Do not connect the terminal blocks (TB5) on the indoor units that are connected to different outdoor units with each other.
4) Replacement of male power jumper connector (CN41) must be performed only on one of the outdoor units.
   (not required if power to the transmission line for centralized control is supplied from a controller with a power-supply function, such as GB-50ADA)
5) Provide grounding to S terminal on the terminal block for transmission line for centralized control (TB7) on only one of the outdoor units.
6) A maximum of 3 system controllers can be connected to the indoor-outdoor transmission line, with the exception that only one G(B)-50A may be connected.
7) When the total number of indoor units exceeds 20 (12 if one or more indoor units of the 200 model or above is connected), it may not be possible to connect a system controller to the indoor-outdoor transmission line.
8) When the number of the connected indoor units is as shown in the table below, one or more transmission boosters (sold separately) are required.
   To connect two transmission boosters, connect them in parallel.
   (Observe the maximum number of connectable indoor units that are listed in the specifications for each outdoor unit.)

	Number of transmission booster (sold separately) required	
	1 unit	2 units
When the P72 and P96 models are not included in the connected indoor units	27 - 50 units	-
When the P72 and P96 models are included in the connected indoor units	21 - 39 units	40 - 50 units

(3) Maximum allowable length

1) Indoor/outdoor transmission line
   Maximum distance (1.25mm^2 [AWG16] or larger)
   L11≦200m [656ft]
   L21≦200m [656ft]
   L25≦200m [656ft]
2) Transmission line for centralized control
   L31≦200m [656ft]
3) MA remote controller wiring
   Same as [3] 1.
4) Maximum line distance via outdoor unit
   (1.25mm^2 [AWG16] or larger)
   L25+L31+L11≦500m [1640ft]
   L11+L31+L21≦500m [1640ft]

(4) Wiring method

1) Indoor/outdoor transmission line

Daisy-chain terminals M1 and M2 of the terminal block for indoor-outdoor transmission line (TB3) on the outdoor unit (OC), of the terminal block for indoor-outdoor transmission line (TB02) on the HBC controller and Sub-HBC controller (HB and HS), of the terminal block for indoor-outdoor transmission line (TB5) on each indoor unit (IC), and the S terminal of the system controller.(Non-polarized two-wire)

- Only use shielded cables.

Shielded cable connection

Daisy-chain the ground terminal (⏚) on the outdoor unit (OC), the S terminal of the terminal block (TB02) on the HB and HS, and the S terminal of the terminal block (TB5) on the indoor unit (IC) with the shield of the shielded cable.

2) Transmission line for centralized control

Daisy-chain terminals M1 and M2 on the terminal block for transmission line for centralized control (TB7) on the outdoor units (OC) in different refrigerant circuits.
When both of the following conditions are met, move the power jumper connector on the control board from CN41 to CN40 on only one of the outdoor units: (1) No power supply units are connected to the transmission line for centralized control AND (2) No controllers with a power-supply function are connected to the system.
Set the central control switch (SW5-1) on the control board of all outdoor units to "ON."

- Only use shielded cables.

Shielded cable connection

Daisy-chain the S terminal on the terminal block (TB7) on the outdoor unit (OC) with the shield wire of the shielded cable. Short-circuit the earth terminal (⏚) and the S terminal on the terminal block (TB7) on the outdoor unit whose power jumper connector is mated with CN40.

3) MA remote controller wiring

Same as [3] 1.

When 2 remote controllers are connected to the system

Same as [3] 1.

Group operation of indoor units

Same as [3] 1.

4) LOSSNAY connection

Connect terminals M1 and M2 on the terminal block (TB5) on the indoor units (IC) to the appropriate terminals on the terminal block for indoor-outdoor transmission line (TB5) on LOSSNAY (LC). (Non-polarized two-wire)

- Indoor units must be interlocked with the LOSSNAY unit using the system controller. (Refer to the operation manual for the system controller for the setting method.) Interlock setting from the remote controller is required if the ON/OFF remote controller alone is connected.

5) Switch setting

Address setting is required as follows.

(5) Address setting method

Procedures	Unit or controller			Address setting range	Setting method	Notes	Factory setting
1	Indoor unit	Main unit	IC	01 to 50	• Assign the smallest address to the main unit in the group.	• Port number setting is required • To perform a group operation of indoor units that feature different functions, designate the indoor unit in the group with the greatest number of functions as the main unit.	00
		Sub unit			Assign sequential numbers starting with the address of the main unit in the same group +1. (Main unit address +1, main unit address +2, main unit address +3, etc.)		
2	LOSSNAY		LC	01 to 50	Assign an arbitrary but unique address to each of these units after assigning an address to all indoor units.	None of these addresses may overlap any of the indoor unit addresses.	00
3	MA remote controller	Main remote controller	MA	No settings required.	-	Make the same indoor unit group settings with the system controller as the ones that were made with the MA remote controller.	Main
		Sub remote controller	MA	Sub remote controller	Settings to be made with the Sub/Main switch		
4	Outdoor unit (Heat source unit)		OC	51 to 100	Set the address to "the smallest indoor unit address in the same refrigerant circuit system + 50." (If the address is already used, set to a different address within the specified range.)	• To set the address to 100, set the rotary switches to 50. • If the address that is assigned to the HBC controller and Sub-HBC controller overlaps any of the addresses that are assigned to the other units, use a different, unused address within the setting range.	00
5	Auxiliary outdoor unit	HBC controller Sub-HBC controller	HB HS	51 to 100	Assign an address that equals the lowest address of the indoor units to be connected to the HBC controller or Sub-HBC controller plus 50.		

[4] An Example of a System to which an ME Remote Controller is connected

(1) Sample control wiring

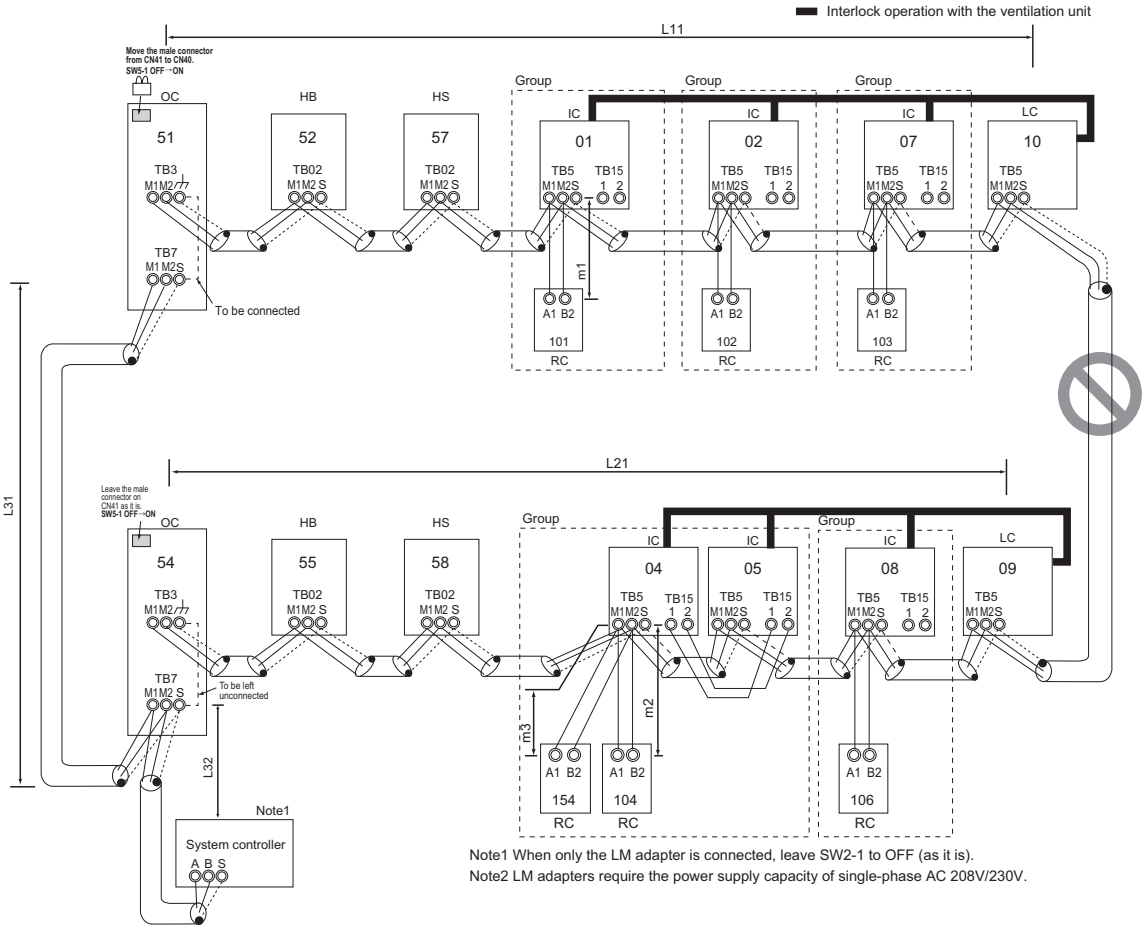

(2) Cautions

1) ME remote controller and MA remote controller cannot both be connected to the same group of indoor units.
2) No more than 2 ME remote controllers can be connected to a group of indoor units.
3) Do not connect the terminal blocks (TB5) on the indoor units that are connected to different outdoor units with each other.
4) Replace the power jumper connector of the control board from CN41 to CN40 on only one of the outdoor units.
   (not required if power to the transmission line for centralized control is supplied from a controller with a power-supply function, such as GB-50ADA)
5) Provide an electrical path to ground for the S terminal on the terminal block for centralized control on only one of the outdoor units.
6) When the number of the connected indoor units is as shown in the table below, one or more transmission boosters (sold separately) are required.
   To connect two transmission boosters, connect them in parallel.
   (Observe the maximum number of connectable indoor units that are listed in the specifications for each outdoor unit.)

	Number of transmission booster (sold separately) required		
	1 unit	2 units	3 units
When the P72 and P96 models are not included in the connected indoor units	15 - 34 units	35 - 50 units	-
When the P72 and P96 models are included in the connected indoor units	11 - 26 units	27 - 42 units	43 - 50 units

7) When a power supply unit is connected to the transmission line for centralized control, leave the power jumper connector on CN41 as it is (factory setting).

(3) Maximum allowable length

1) Indoor/outdoor transmission line
   Maximum distance (1.25mm^2 [AWG16] or larger)
   L11≦200m [656ft]
   L21≦200m [656ft]
2) Transmission line for centralized control
   Same as [3] 2.
3) ME remote controller wiring
   Maximum overall line length
   (0.3 to 1.25mm^2 [AWG22 to 16])
   m1≦10m [32ft]
   m2+m3≦10m [32ft]
   If the standard-supplied cable must be extended, use a cable with a diameter of 1.25mm^2 [AWG16]. The section of the cable that exceeds 10m [32ft] must be included in the maximum indoor-outdoor transmission line distance described in (1).
   When connected to the terminal block on the Simple remote controller, use cables that meet the following cable size specifications: 0.75 - 1.25 mm^2 [AWG18-16].
4) Maximum line distance via outdoor unit
   (1.25 mm^2 [AWG16] or large)
   Same as [3] 2.

(4) Wiring method

1) Indoor/outdoor transmission line

Same as [3] 2.

Shielded cable connection

Same as [3] 2.

2) Transmission line for centralized control

Same as [3] 2.

Shielded cable connection

Same as [3] 2.

3) ME remote controller wiring

ME remote controller is connectable anywhere on the indoor-outdoor transmission line.

When 2 remote controllers are connected to the system

Refer to the section on Switch Setting.

Performing a group operation (including the group operation of units in different refrigerant circuits).

Refer to the section on Switch Setting.

4) LOSSNAY connection

Same as [3] 2.

5) Switch setting

Address setting is required as follows.

(5) Address setting method

Procedures	Unit or controller			Address setting range	Setting method	Notes	Factory setting
1	Indoor unit	Main unit	IC	01 to 50	•Assign the smallest address to the main unit in the group.	•Port number setting is required •To perform a group operation of indoor units that have different functions, set the indoor unit in the group with the greatest number of functions as the main unit.	00
		Sub unit			Assign sequential numbers starting with the address of the main unit in the same group +1. (Main unit address +1, main unit address +2, main unit address +3, etc.)		
2	LOSSNAY		LC	01 to 50	Assign an arbitrary but unique address to each of these units after assigning an address to all indoor units.	None of these addresses may overlap any of the indoor unit addresses.	00
3	ME remote controller	Main remote controller	RC	101 to 150	Add 100 to the main unit address in the group	•It is not necessary to set the 100s digit. •To set the address to 200, set the rotary switches to 00.	101
		Sub remote controller	RC	151 to 200	Add 150 to the main unit address in the group		
4	Outdoor unit (Heat source unit)		OC	51 to 100	Set the address to "the smallest indoor unit address in the same refrigerant circuit system + 50." (If the address is already used, set to a different address within the specified range.)	•To set the address to 100, set the rotary switches to 50. •If the address that is assigned to the HBC controller and Sub-HBC controller overlaps any of the addresses that are assigned to the other units, use a different, unused address within the setting range.	00
5	Auxiliary outdoor unit	HBC controller Sub-HBC controller	HB HS	51 to 100	Assign an address that equals the lowest address of the indoor units to be connected to the HBC controller or Sub-HBC controller plus 50.		

[5] An Example of a System to which both MA Remote Controller and ME Remote Controller are connected

(1) Sample control wiring

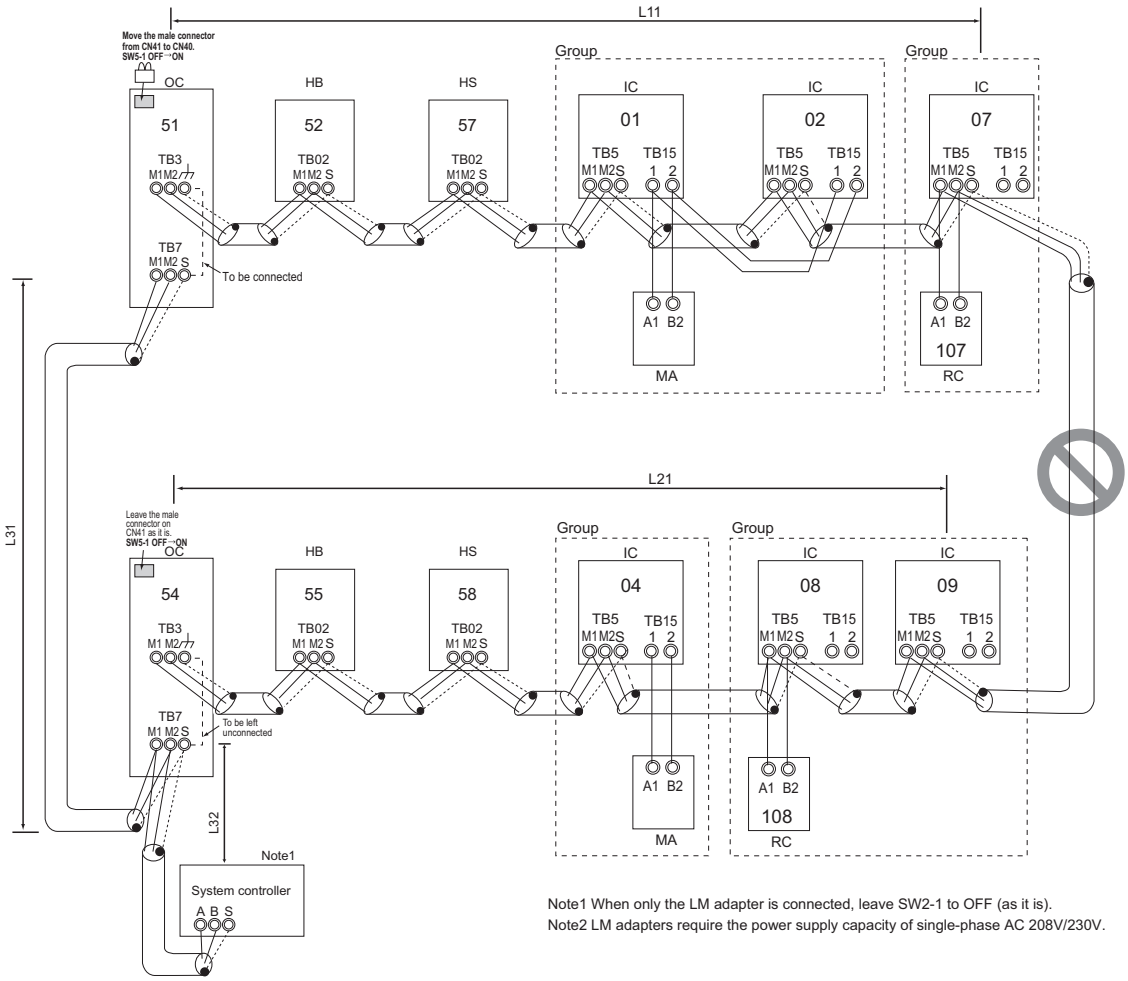

Note1 When only the LM adapter is connected, leave SW2-1 to OFF (as it is).
Note2 LM adapters require the power supply capacity of single-phase AC 208V/230V.

(2) Cautions

1) Be sure to connect a system controller.
2) ME remote controller and MA remote controller cannot both be connected to the same group of indoor units.
3) Assign to the indoor units connected to the MA remote controller addresses that are smaller than those of the indoor units that are connected to the ME remote controller.
4) No more than 2 ME remote controllers can be connected to a group of indoor units.
5) No more than 2 MA remote controllers can be connected to a group of indoor units.
6) Do not connect the terminal blocks (TB5) on the indoor units that are connected to different outdoor units with each other.
7) Replace the power jumper connector of the control board from CN41 to CN40 on only one of the outdoor units.
   (not required if power to the transmission line for centralized control is supplied from a controller with a power-supply function, such as GB-50ADA)
8) Provide an electrical path to ground for the S terminal on the terminal block for centralized control on only one of the outdoor units.
9) When the number of the connected indoor units is as shown in the table below, one or more transmission boosters (sold separately) are required.
   To connect two transmission boosters, connect them in parallel.
   (Observe the maximum number of connectable indoor units that are listed in the specifications for each outdoor unit.)

	Number of transmission booster (sold separately) required		
	1 unit	2 units	3 units
When the P72 and P96 models are not included in the connected indoor units	15 - 34 units	35 - 50 units	-
When the P72 and P96 models are included in the connected indoor units	11 - 26 units	27 - 42 units	43 - 50 units

10) When a power supply unit is connected to the transmission line for centralized control, leave the power jumper connector on CN41 as it is (factory setting).

(3) Maximum allowable length

1) Indoor/outdoor transmission line

   Same as [3] 2.

2) Transmission line for centralized control

   Same as [3] 2.

3) MA remote controller wiring

   Same as [3] 1.

4) ME remote controller wiring

   Same as [4]

5) Maximum line distance via outdoor unit (1.25 mm^2 or larger)

   Same as [3] 2.

(4) Wiring method

1) Indoor/outdoor transmission line

   Same as [3] 2.

   Shielded cable connection

   Same as [3] 2.

2) Transmission line for centralized control

   Same as [3] 2.

   Shielded cable connection

   Same as [3] 2.

3) MA remote controller wiring

   (When 2 remote controllers are connected to the system

   Group operation of indoor units)

   Same as [3] 1.

4) ME remote controller wiring

   (When 2 remote controllers are connected to the system

   Group operation of indoor units)

   Same as [4]

5) LOSSNAY connection

   Same as [3] 2.

6) Switch setting

   Address setting is required as follows.

(5) Address setting method

Procedures	Unit or controller				Address setting range	Setting method	Notes	Factory setting
1	Operation with the MA remote controller	Indoor unit	Main unit	IC	01 to 50	♦Assign the smallest address to the main unit in the group.	♦Assign an address smaller than that of the indoor unit that is connected to the ME remote controller. ♦Enter the same indoor unit group settings on the system controller as the ones that were entered on the MA remote controller. ♦To perform a group operation of indoor units that have different functions, designate the indoor unit in the group with the greatest number of functions as the main unit. ♦Port number setting is required.	00
			Sub unit	IC	01 to 50	Assign sequential numbers starting with the address of the main unit in the same group +1. (Main unit address +1, main unit address +2, main unit address +3, etc.)		
		MA remote controller	Main remote controller	MA	No settings required.	-		Main
			Sub remote controller	MA	Sub remote controller	Settings to be made according to the remote controller function selection		
2	Operation with the ME remote controller	Indoor unit	Main unit	IC	01 to 50	Assign the smallest address to the main unit in the group.	♦Assign an address higher than those of the indoor units that are connected to the MA remote controller. ♦Make the initial settings for the indoor unit group settings via the system controller. ♦To perform a group operation of indoor units that have different functions, designate the indoor unit in the group with the greatest number of functions as the main unit. ♦Port number setting is required. ♦Addresses that are assigned to the indoor units that are connected to the sub BC controller should be higher than the addresses that are assigned to the indoor units that are connected to the main BC controller.	00
			Sub unit	IC	01 to 50	Assign sequential numbers starting with the address of the main unit in the same group +1. (Main unit address +1, main unit address +2, main unit address +3, etc.)		
		ME remote controller	Main remote controller	RC	101 to 150	Add 100 to the main unit address in the group.	♦It is not necessary to set the 100s digit. ♦To set the address to 200, set it to 00.	101
			Sub remote controller	RC	151 to 200	Add 150 to the main unit address in the group.		
3	LOSSNAY			LC	01 to 50	Assign an arbitrary but unique address to each of these units after assigning an address to all indoor units.	None of these addresses may overlap any of the indoor unit addresses.	00
4	Outdoor unit (Heat source unit)			OC	51 to 100	Set the address to "the smallest indoor unit address in the same refrigerant circuit system + 50." (If the address is already used, set to a different address within the specified range.)	♦To set the address to 100, set it to 50. ♦If the address that is assigned to the HBC controller and Sub-HBC controller overlaps any of the addresses that are assigned to the other units, use a different, unused address within the setting range.	00
5	Auxiliary outdoor unit	HBC controller Sub-HBC controller		HB HS	51 to 100	Assign an address that equals the lowest address of the indoor units to be connected to the HBC controller or Sub-HBC controller plus 50.		

[6] Restrictions on Pipe Length

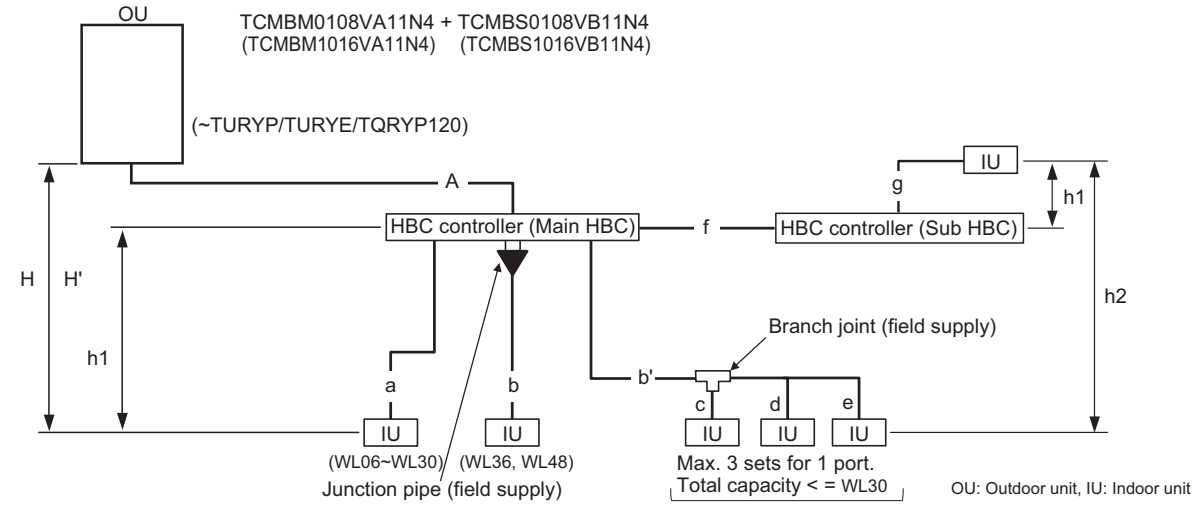

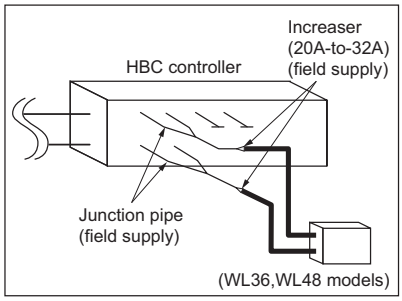

Fig. 3-2-A

(Unit: m [ft])

	Item		Piping portion	Allowable value
Pipe Lengths	Between outdoor unit and HBC controller (refrigerant pipework)		A	110 [360] or less
	Water pipework between indoor units and HBC controller		f + g	60 [196] or less
Difference of elevation	Between indoor and outdoor units	Above outdoor unit	H	50 [164] or less
		Below outdoor unit	H'	40 [131] or less
	Between indoor units and HBC controller		h1	15 [49] or less
	Between indoor units		h2	15 [49] or less

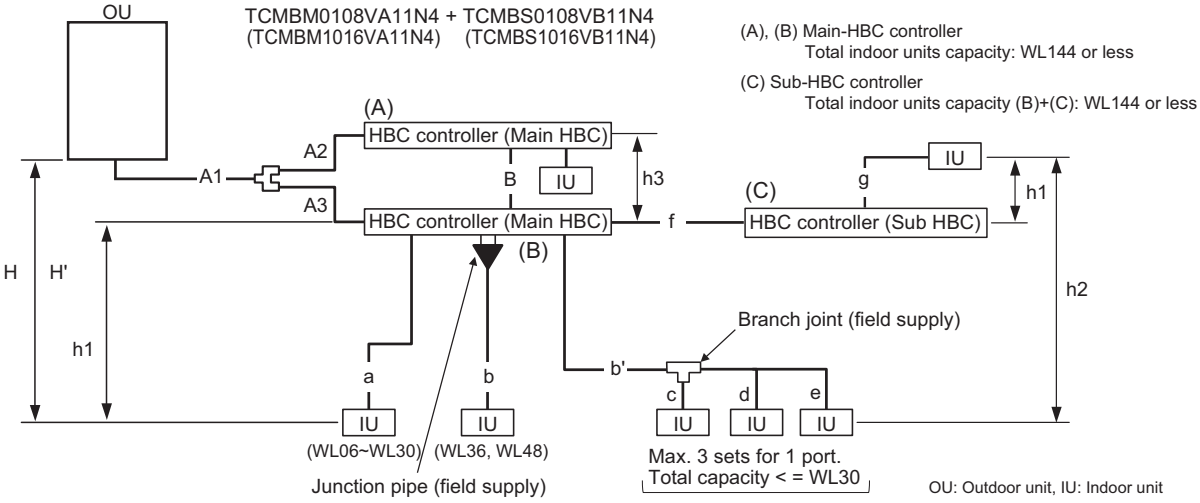

(Unit: m [ft])

	Item		Piping portion	Allowable value
Pipe Lengths	Between outdoor unit and HBC controller (refrigerant pipework)		A1 + A2 + A3	110 [360] or less
	Water pipework between indoor units and HBC controller		f + g	60 [196] or less
	Between HBC controllers		B	40 [131] or less
Difference of elevation	Between indoor and outdoor units	Above outdoor unit	H	50 [164] or less
		Below outdoor unit	H'	40 [131] or less
	Between indoor units and HBC controller		h1	15 [49] or less
	Between indoor units		h2	15 [49] or less
	Between HBC controllers		h3	15 [49] or less

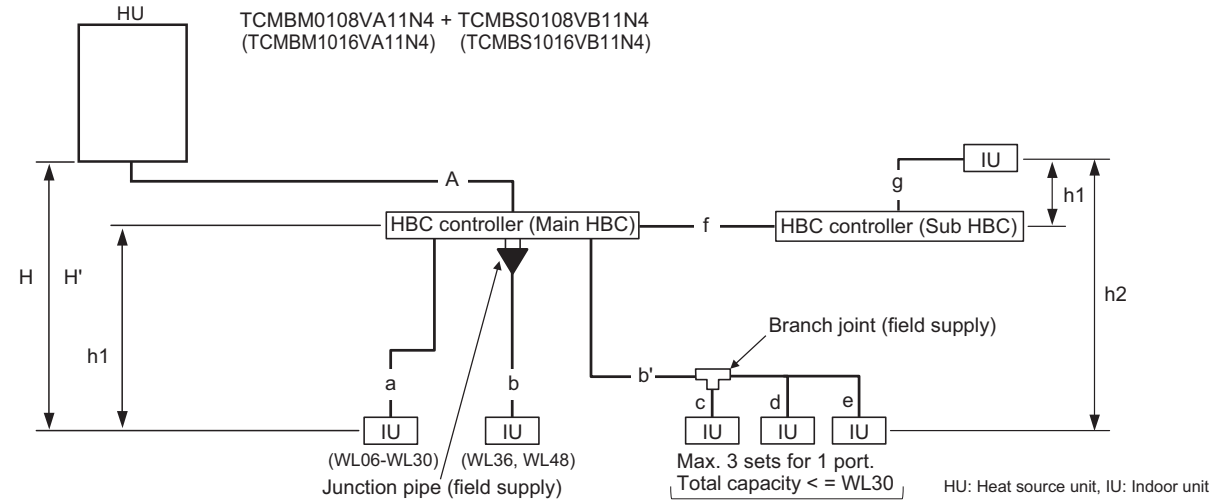

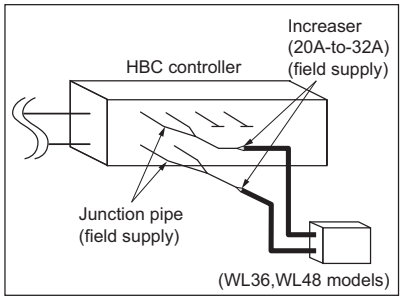

Fig. 3-2-A

(Unit: m [ft])

	Item		Piping portion	Allowable value
Pipe Lengths	Between outdoor unit and HBC controller (refrigerant pipework)		A	110 [360] or less
	Water pipework between indoor units and HBC controller		f + g	60 [196] or less
Difference of elevation	Between indoor and outdoor units	Above outdoor unit	H	50 [164] or less
		Below outdoor unit	H'	40 [131] or less
	Between indoor units and HBC controller		h1	15 [49] or less
	Between indoor units		h2	15 [49] or less

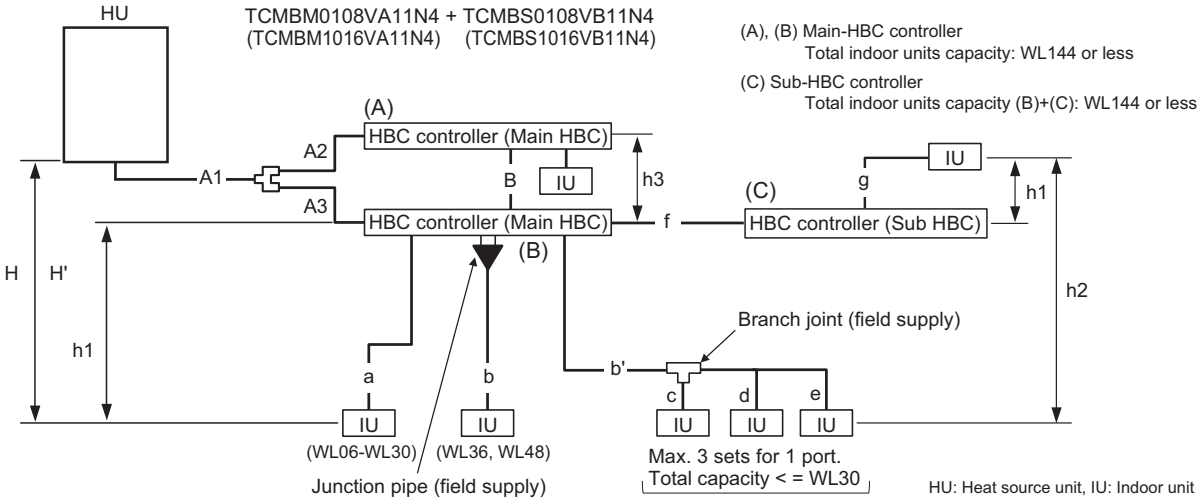

(Unit: m [ft])

	Item		Piping portion	Allowable value
Pipe Lengths	Between outdoor unit and HBC controller (refrigerant pipework)		A1 + A2 + A3	110 [360] or less
	Water pipework between indoor units and HBC controller		f + g	60 [196] or less
	Between HBC controllers		B	40 [131] or less
Difference of elevation	Between indoor and outdoor units	Above outdoor unit	H	50 [164] or less
		Below outdoor unit	H'	40 [131] or less
	Between indoor units and HBC controller		h1	15 [49] or less
	Between indoor units		h2	15 [49] or less
	Between HBC controllers		h3	15 [49] or less

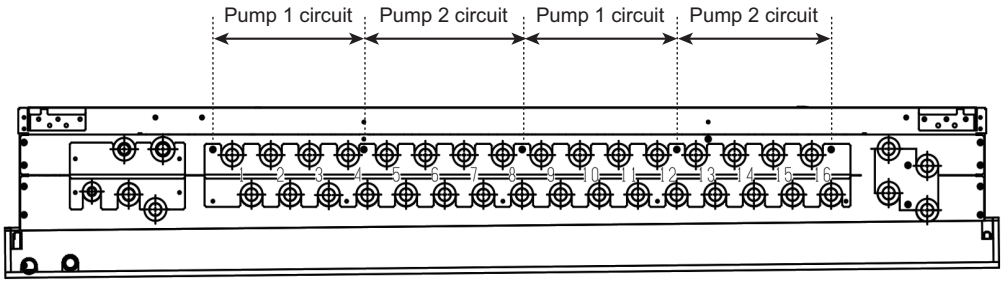

Fig. 3-2-B

Note

1) To connect multiple indoor units to a port
   - Maximum total capacity of connected indoor units: WL30 or below
   - Maximum number of connectable indoor units: 3 units
   - Branch joints are field-supplied.
     All the indoor units that are connected to the same port must be in the same group and Thermo-ON/OFF operation simultaneously. For all the indoor units in the group, the room temperature needs to be monitored via the connected remote controller.
   - When connecting a WL27 through 48 model of indoor unit to an HBC controller, the pipes connecting the unit to the same set of HBC controller ports cannot be branched out to connect additional units.
   - Selection of water piping
     Select the size according to the total capacity of indoor units to be installed downstream.
   - Do not connect multiple indoor units to the same port when operating each of them in different mode (cooling, heating, stop, and thermo-off). The indoor units connected to the same port must be set to operate in the same mode. Set them in the same group to make them run/stop in the same mode all together. For other options, enable the thermo setting on the remote controller, or set the common thermostat (optional) to run/stop the units in the same mode based on a representative temperature.

2) Connecting WL36 or 48 indoor units to an HBC controller
   - When connecting WL36 or 48 indoor units to an HBC controller, connect each unit to two sets of two ports on the HBC controller, using two Junction pipes (Y-joints). (See Fig. 3-2-A.)
   - Connect an increaser (20 mm (13/16 in)-to-30 mm (1-3/16 in)) to the merged side of each junction pipe. (See Fig. 3-2-A.)
   - When connecting junction pipes to HBC controller ports, the branched sides of the junction pipes cannot be connected to combinations of ports "4 and 5," "8 and 9," or "12 and 13." (See Fig. 3-2-B.)
   - When connecting a WL36 or a 48 model of indoor unit to an HBC controller, the pipes connecting the unit to the same set of HBC controller ports cannot be branched out to connect additional units.

3) Maximum connectable capacity of indoor units to HBC controller for obtaining the rated performance.
   - HBC controller has two pumps. Each pump can accommodate the capacity of indoor units equivalent to WL67.
     Make sure that the total capacity of the indoor units connected to "ports 1 through 4 and 9 through 12" or "5 through 8 and 13 through 16" will not exceed WL67. (See Fig. 3-2-B.)

1. Refrigerant and water pipe size

(1) Refrigerant pipe between outdoor unit and HBC controller (Part A, A1, A2, and A3)

1) Use of one HBC controller

(Unit: mm [in])

		HBC controller		
	Unit model	Model name	High pressure side	Low pressure side
Outdoor Unit side	TURYP/E072	(HBC controller) TCMBM0108VA11N4 TCMBM1016VA11N4*1	ø15.88 [5/8] (Brazing)	ø19.05 [3/4] (Brazing)
	TURYP/E096		ø19.05 [3/4] (Brazing)	ø22.2 [7/8] (Brazing)
	TURYP/E120		ø19.05 [3/4] (Brazing)	ø28.58 [1-1/8] (Brazing)

*1. TURYP/E144 model or larger requires a connection of two main-HBC controllers in parallel.

2) Use of two HBC controllers

(Unit: mm [in])

		HBC controller				
	Unit model	Model name	Between outdoor unit and twining pipe		Between twinning pipe and HBC controller	
			High pressure side	Low pressure side	High pressure side	Low pressure side
Outdoor Unit side	TURYP/E072	(HBC controller) TCMBM0108VA11N4 TCMBM1016VA11N4*1	ø15.88 [5/8] (Brazing)	ø19.05 [3/4] (Brazing)	ø15.88 [5/8] (Brazing) for each HBC controller	ø19.05 [3/4] (Brazing) for each HBC controller
	TURYP/E096		ø19.05 [3/4] (Brazing)	ø22.2 [7/8] (Brazing)	ø15.88 [5/8] (Brazing) for each HBC controller	ø19.05 [3/4] (Brazing) for each HBC controller
	TURYP/E120		ø19.05 [3/4] (Brazing)	ø28.58 [1-1/8] (Brazing)	ø15.88 [5/8] (Brazing) for each HBC controller	ø19.05 [3/4] (Brazing) for each HBC controller
	TURYP/E144		ø22.2 [7/8] (Brazing)	ø28.58 [1-1/8] (Brazing)	ø15.88 [5/8] (Brazing) for each HBC controller	ø19.05 [3/4] (Brazing) for each HBC controller
	TURYP/E168		ø22.2 [7/8] (Brazing)	ø28.58 [1-1/8] (Brazing)	ø19.05 [3/4] (Brazing) for each HBC controller	ø22.2 [7/8] (Brazing) for each HBC controller

*1. TURYP/E144 model or larger requires a connection of two main-HBC controllers in parallel.

3) Use of one HBC controller

(Unit: mm [in])

	Unit model	HBC controller		
		Model name	High pressure side	Low pressure side
Heat source unit side	TQRYP072	(HBC controller) TCMBM0108VA11N4 TCMBM1016VA11N4	ø15.88 [5/8] (Brazing)	ø19.05 [3/4] (Brazing)
	TQRYP096		ø19.05 [3/4] (Brazing)	ø22.2 [7/8] (Brazing)
	TQRYP120		ø19.05 [3/4] (Brazing)	ø22.2 [7/8] (Brazing)

4) Use of two HBC controllers

(Unit: mm [in])

	Unit model	HBC controller				
		Model name	Between outdoor unit and twining pipe		Between twinning pipe and HBC controller	
			High pressure side	Low pressure side	High pressure side	Low pressure side
Heat source unit side	TQRYP072	(HBC controller) TCMBM0108VA11N4 TCMBM1016VA11N4	ø15.88 [5/8] (Brazing)	ø19.05 [3/4] (Brazing)	ø15.88 [5/8] (Brazing) for each HBC controller	ø19.05 [3/4] (Brazing) for each HBC controller
	TQRYP096		ø19.05 [3/4] (Brazing)	ø22.2 [7/8] (Brazing)	ø15.88 [5/8] (Brazing) for each HBC controller	ø19.05 [3/4] (Brazing) for each HBC controller
	TQRYP120		ø19.05 [3/4] (Brazing)	ø22.2 [7/8] (Brazing)	ø15.88 [5/8] (Brazing) for each HBC controller	ø19.05 [3/4] (Brazing) for each HBC controller
	TQRYP144		ø22.2 [7/8] (Brazing)	ø28.58 [1-1/8] (Brazing)	ø15.88 [5/8] (Brazing) for each HBC controller	ø19.05 [3/4] (Brazing) for each HBC controller
	TQRYP168		ø22.2 [7/8] (Brazing)	ø28.58 [1-1/8] (Brazing)	ø15.88 [5/8] (Brazing) for each HBC controller	ø22.2 [7/8] (Brazing) for each HBC controller

(2) Water pipe between HBC controller and indoor units (Sections a, b, c, d, e, and g)

Total down-stream indoor unit capacity	Pipe size between Main-HBC controller and indoor unit Pipe size between Sub-HBC controller and indoor unit
WL06-WL23	I.D. ≥ 20.0 mm (13/16 in)
WL24-WL48	I.D. ≥ 30.0 mm (1-3/16 in)

***The diameter of HBC controller ports is O.D. 22.2 mm (7/8 in).**

(3) Water pipe between HBC controller and Sub-HBC controller

Total down-stream indoor unit capacity	Pipe size between Main-HBC controller and Sub-HBC controller
WL06-WL36	I.D. ≥ 20.0 mm (13/16 in)
WL37-WL72	I.D. ≥ 25.8 mm (1-1/16 in)
WL73-WL108	I.D. ≥ 30.0 mm (1-3/16 in)
WL109-WL144	I.D. ≥ 33.3 mm (1-5/16 in)
WL145-WL180	I.D. ≥ 36.2 mm (1-7/16 in)
WL181-WL200	I.D. ≥ 36.8 mm (1-8/16 in)

***The diameter of HBC controller ports is O.D. 22.2 mm (7/8 in).**

(4) Refrigerant pipe between HBC controller and HBC controller

Unit: mm [inch]

ø15.88 [5/8"] (Brazed connection)

2. Connecting the HBC controller

(1) Size of the pipe that fits the standard HBC controller ports

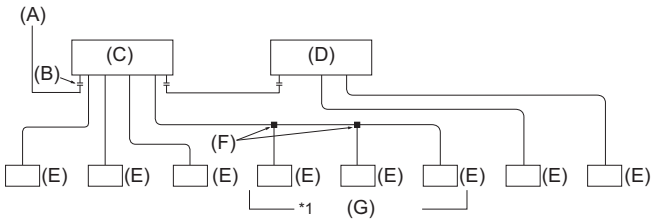

(A) To outdoor unit
(B) End connection (brazing)
(C) Main-HBC controller
(D) Sub-HBC controller
(E) Indoor unit
(F) Twinning pipe (field supply)
(G) Up to three units for 1 branch hole; total capacity: below 30 (but same in cooling/heating mode)

III HBC Controller Components

[1] HBC Controller Components 43
[2] Sub-HBC Controller Components 46
[3] Control Box of the HBC Controller and Sub-HBC Controller 48
[4] HBC Controller and Sub-HBC Controller Circuit Board 49
[5] Maintenance Equipment 51

[1] HBC Controller Components

1. Front

(1) TCMBM1016VA11N4

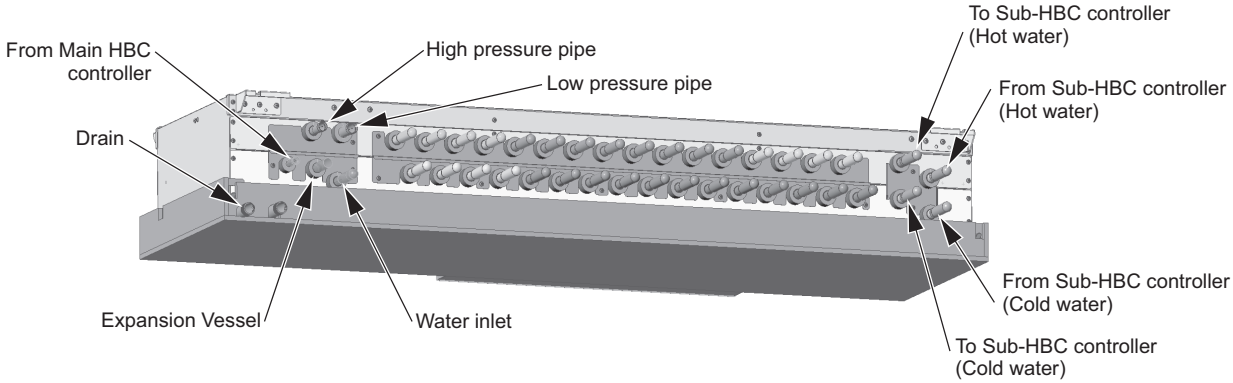

(2) TCMBM0108VA11N4

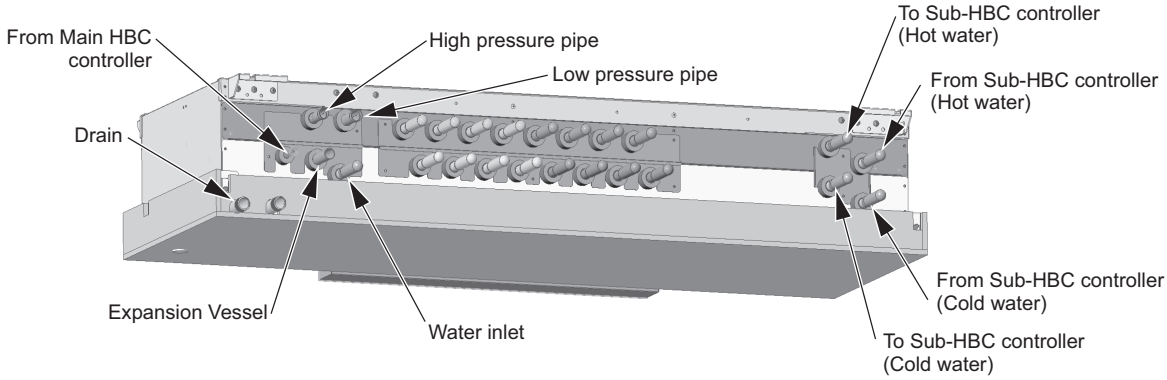

2. Rear right side (cooling)

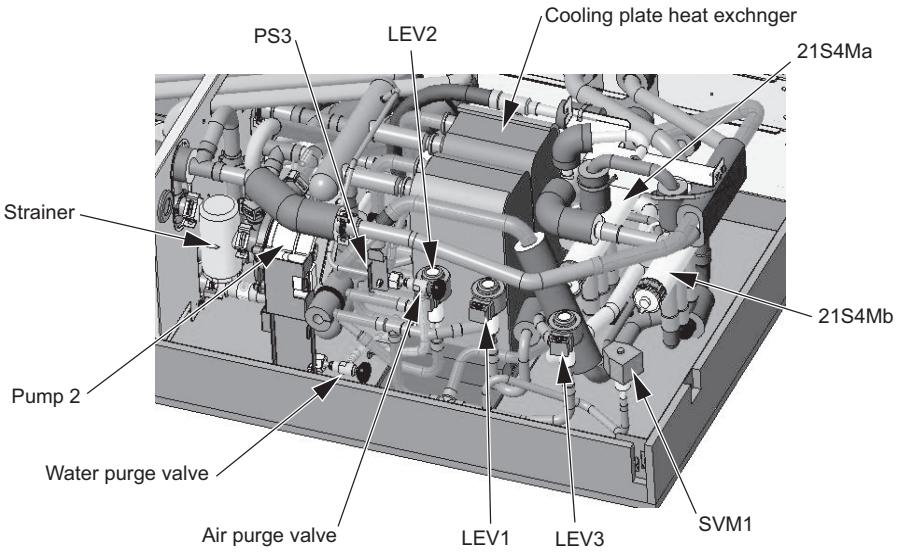

3. Rear left side (heating)

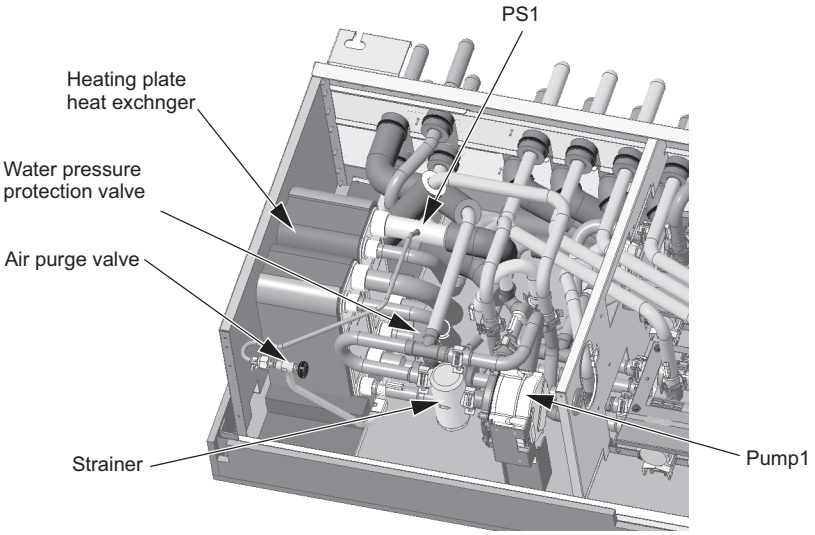

4. Top side

(1) TCMBM1016VA11N4

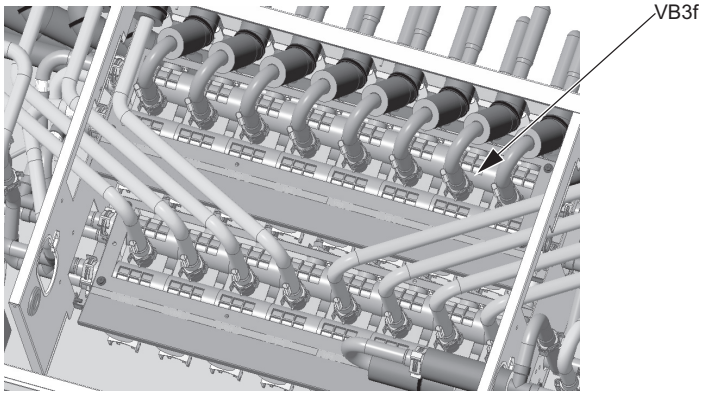

(2) TCMBM0108VA11N4

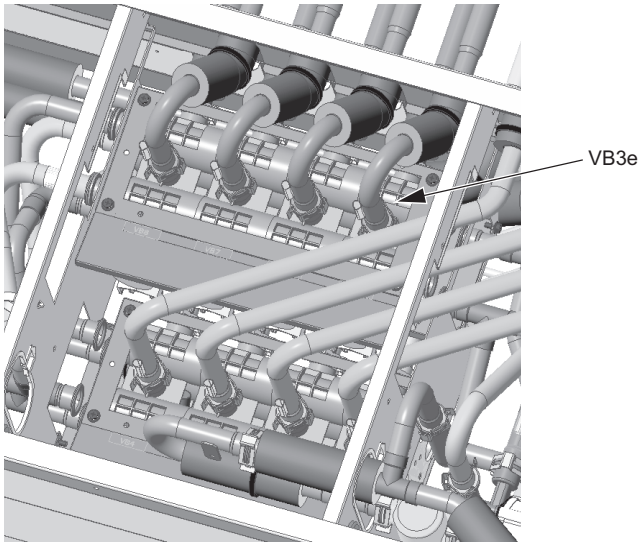

[2] Sub-HBC Controller Components

1. Front

(1) TCMBS1016VB11N4

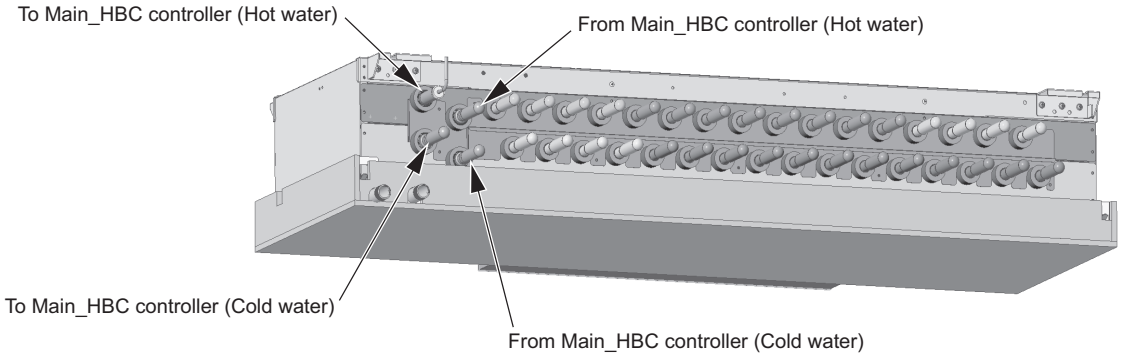

(2) TCMBS0108VB11N4

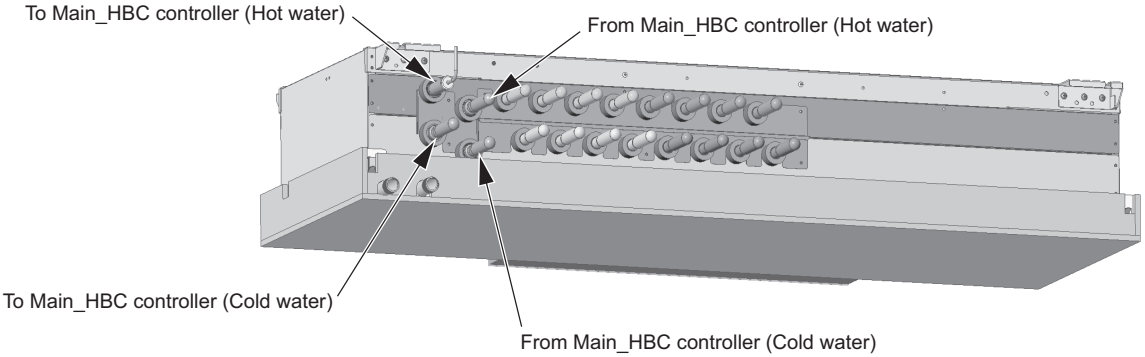

2. Top side

(1) TCMBS1016VB11N4

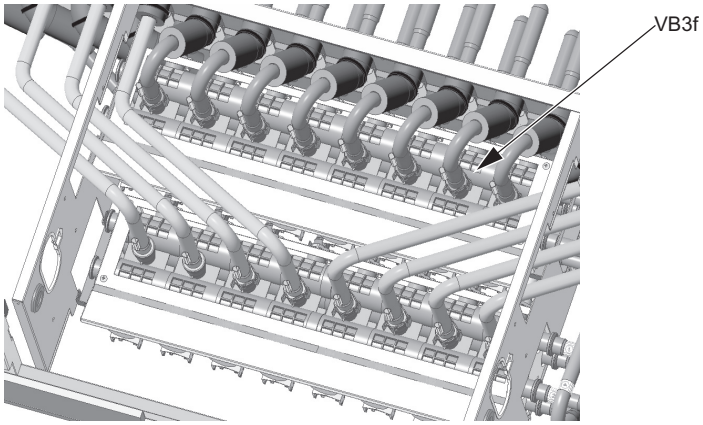

(2) TCMBS0108VB11N4

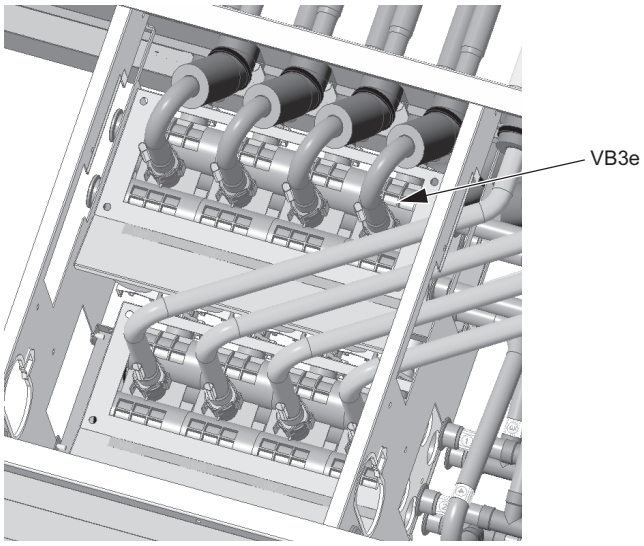

[3] Control Box of the HBC Controller and Sub-HBC Controller

1. TCMBM0108VA11N4, TCMBM1016VA11N4 ,TCMBS0108VB11N4, TCMBS1016VB11N4

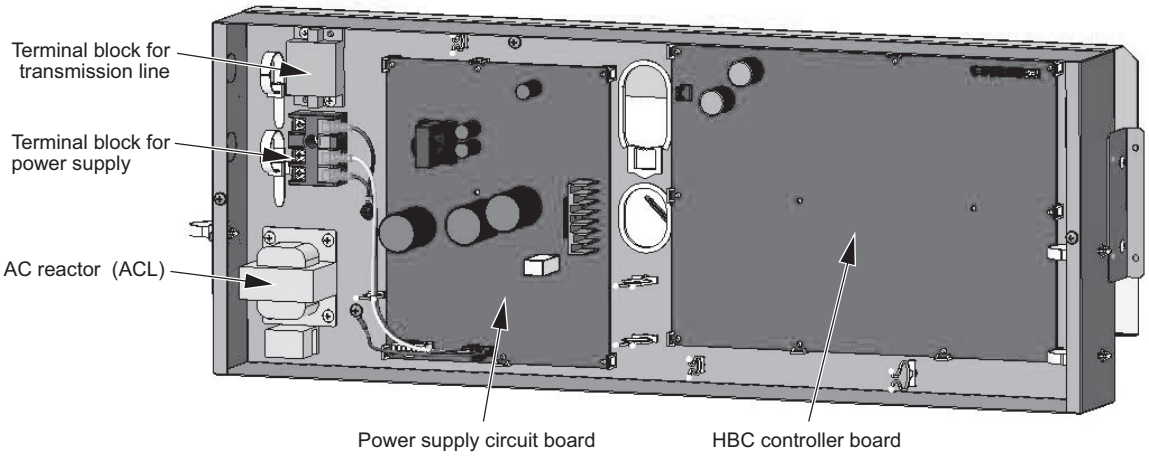

[4] HBC Controller and Sub-HBC Controller Circuit Board

1. HBC controller and Sub-HBC controller circuit board

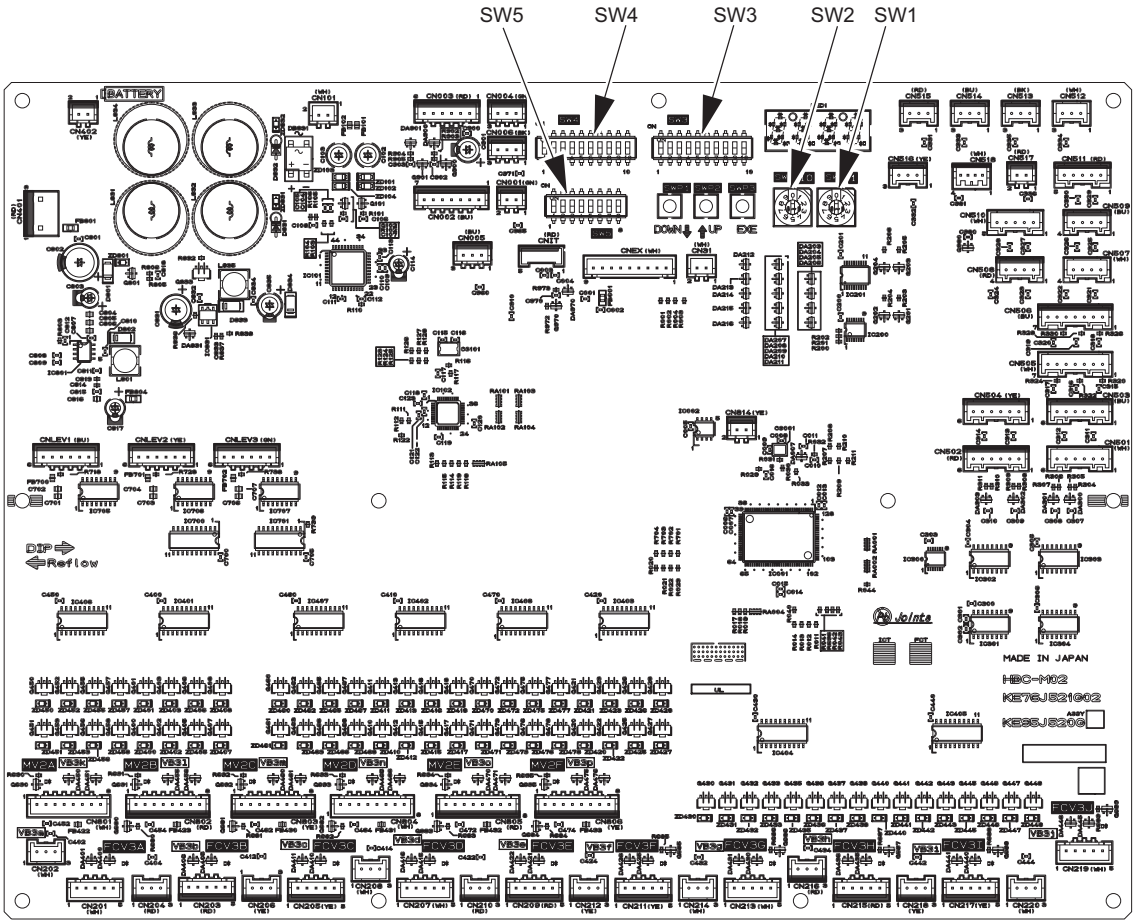

2. Power supply circuit board

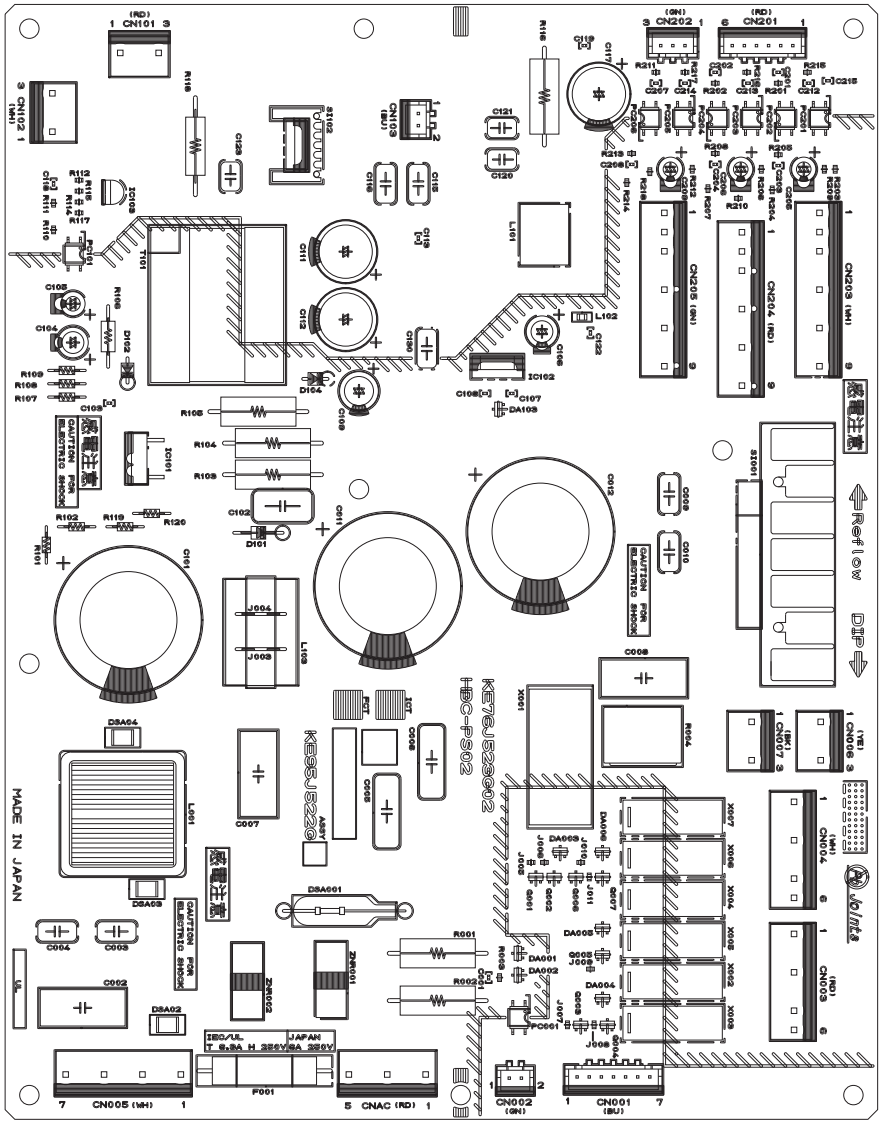

[5] Maintenance Equipment

Maintenance cycle

[Note that maintenance cycle does not mean guarantee period.]

The following tables are applicable when using equipment under the conditions below.

- Normal use without frequent START/STOPs (The number of START/STOPs is assumed to be less than 6 times per hour in normal use.)
- Operating hours are assumed to be 10 hours per day/2500 hours per year.

When the equipment is used under the following conditions, the "maintenance cycle" and "replacement intervals" may be shortened.

- When equipment is used in an environment where temperature and humidity are high or change dramatically
- When equipment is used in an environment where power supply fluctuations (the distortion of voltage, frequency, and waveform) are large (Only within the allowable range)
- When equipment starts/stops frequently and operates for long periods (24-hour air-conditioning operation)

Table 1. Maintenance cycle

Major components	Checking cycle	Maintenance cycle
Pump	1 year	30,000h
Electric board	1 year	25,000h

Note 1 This table shows major components. Refer to the maintenance contract for details.

Note 2 This maintenance cycle shows a period in which products are expected to require no maintenance. Use this cycle for planning maintenance (budgeting the maintenance expense etc.) The Checking/ Maintenance cycle may be shorter than the one shown on this table depending on the contents of the maintenance check contract.

- Sudden unpredictable accidents may occur even if check-ups are performed.

Ⅳ Electrical Wiring Diagram

[1] Electrical Wiring Diagram of the HBC Controller and Sub-HBC Controller.....55
[2] Electrical Wiring Diagram of Transmission Booster.....63

[1] Electrical Wiring Diagram of the HBC Controller and Sub-HBC Controller

(1) TCMBM0108VA11N4

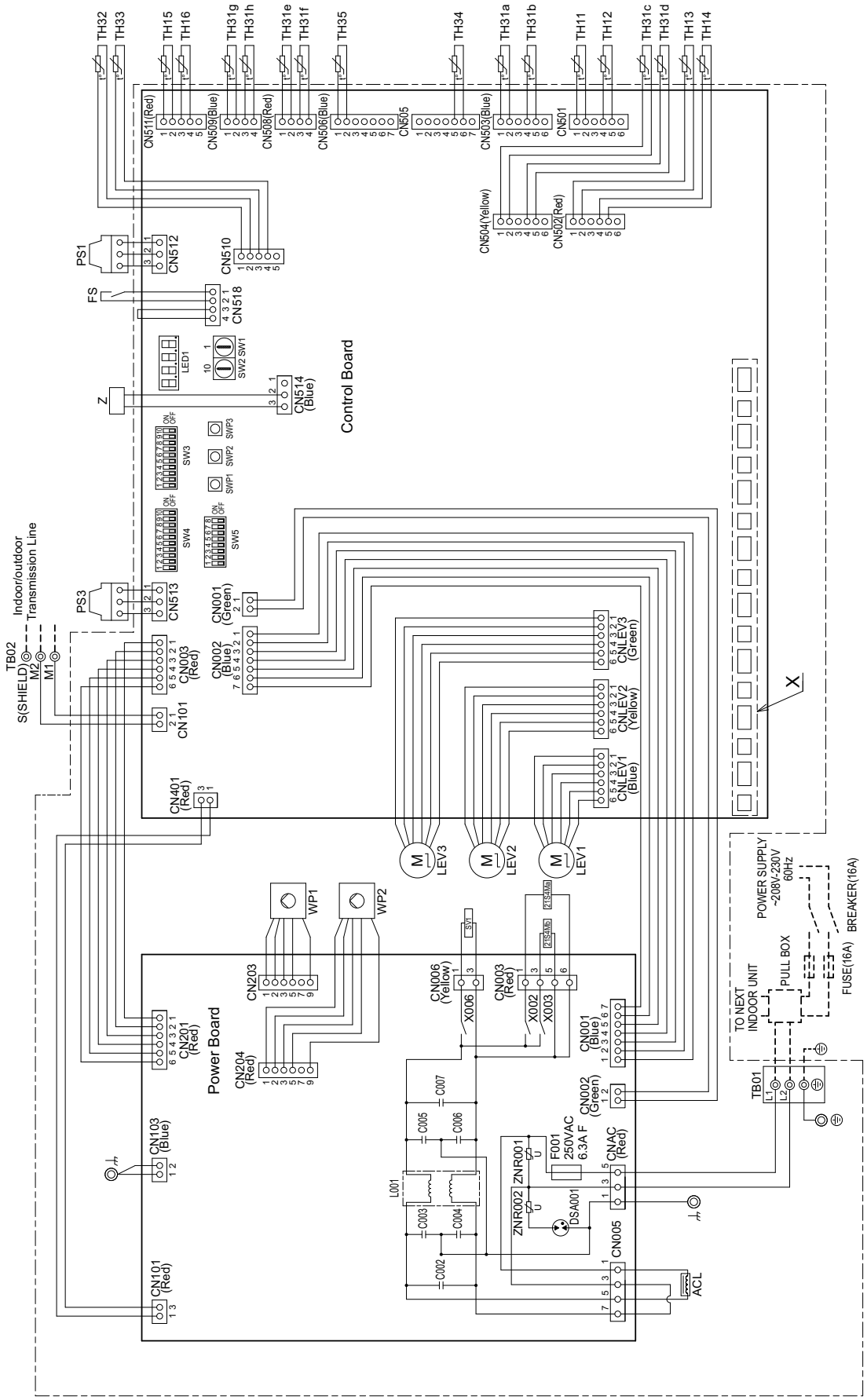

(2) TCMBM0108VA11N4 (Detail of X section)

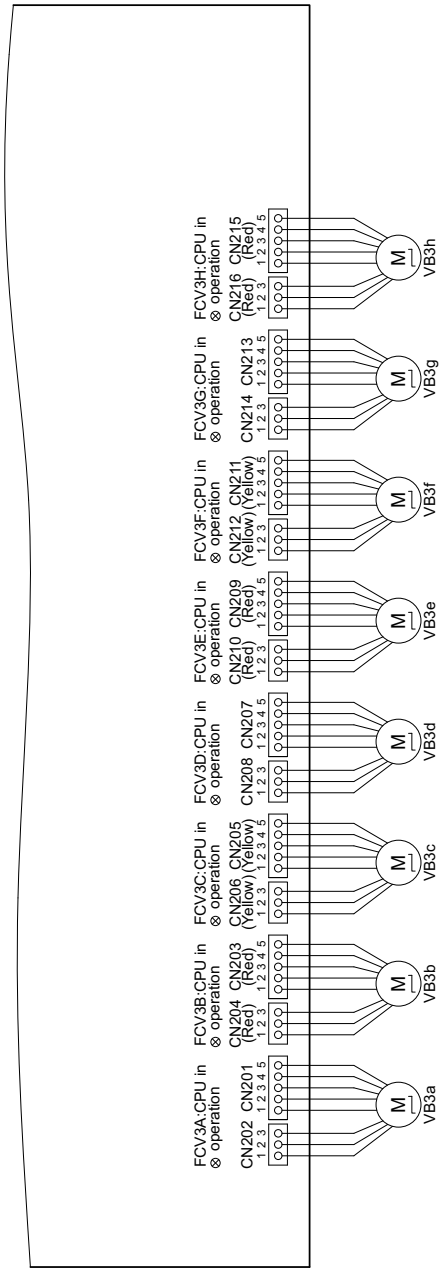

NOTE:1.TB02 is transmission terminal block.
Never connect power line to it.
2.The initial set values of switch on Control Board are as follows.
SW1:0
SW2:0
3.The wirings to TB01 and TB02 shown in dotted line are field work.

(Symbol explanation)

Symbol	Name	Symbol	Name
ACL	AC reactor	SV1	Solenoid valve
TH11~16,TH32~35, TH31a~h	Thermister sensor	F001	Fuse AC250V 6.3A FIH(TP)
LEV1~3	Expansion valve	21S4Ma,21S4Mb	4 way valve
PS1,PS3	Pressure sensor	WP1,WP2	Pump
TB01	Terminal block (for power source)	VB3a~h	Valve block
		FS	Float switch
		Z	Function setting connector
TB02	Terminal block (for Transmission)		

(3) TCMBM1016VA11N4

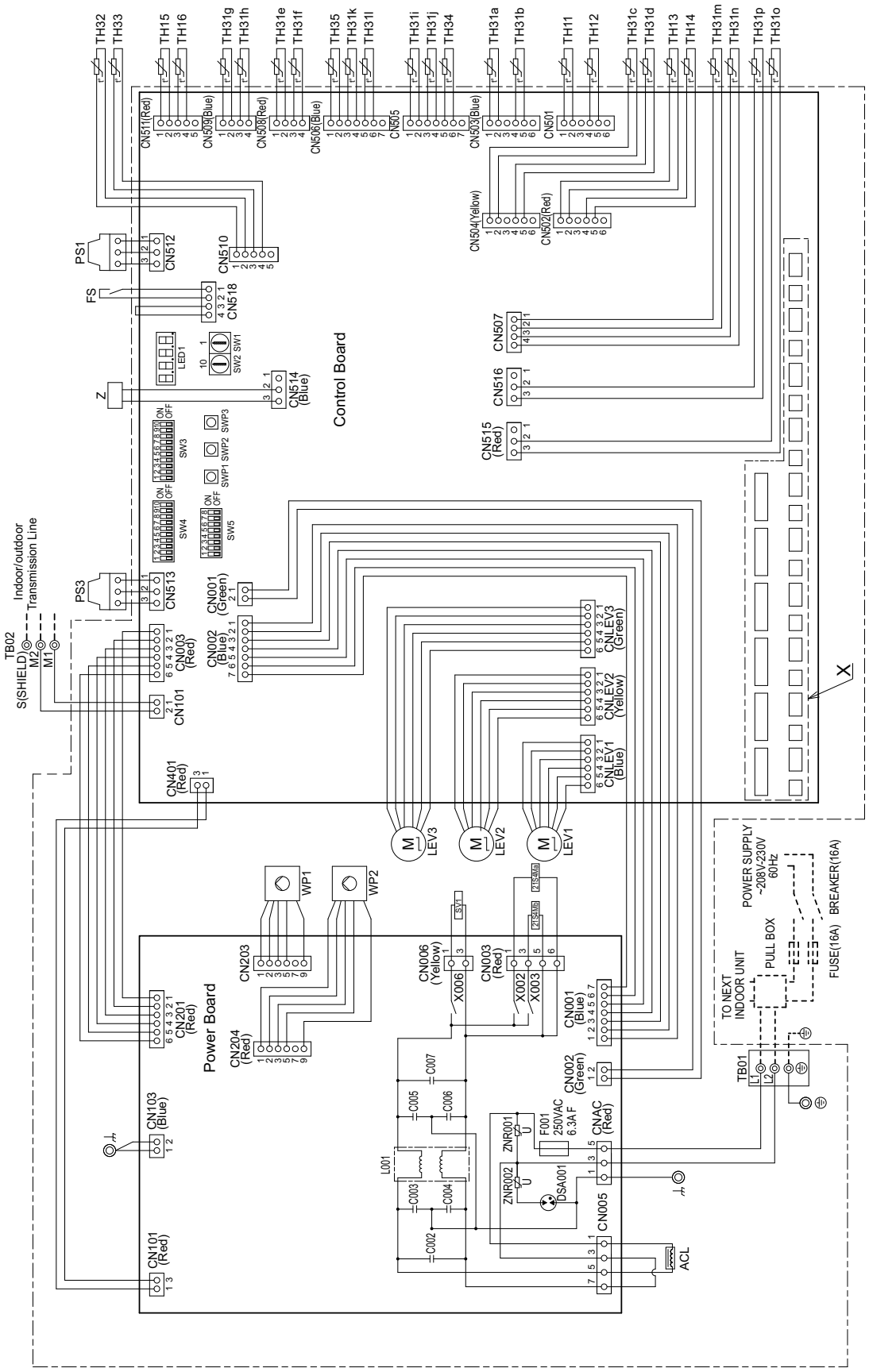

(4) TCMBM1016VA11N4 (Detail of X section)

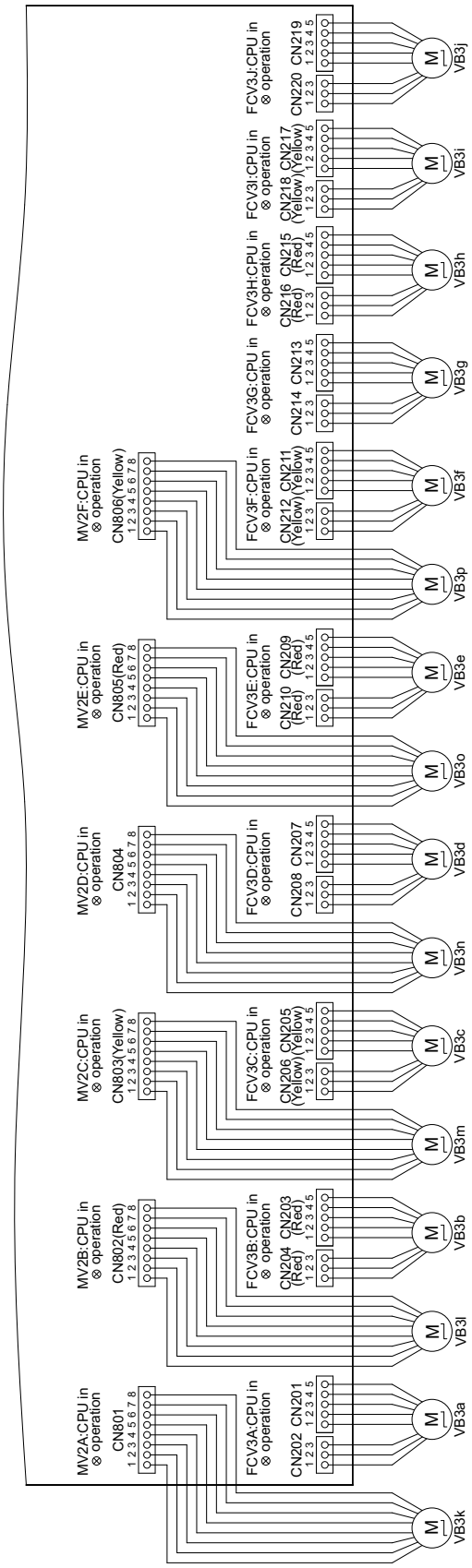

NOTE: 1. TB02 is transmission terminal block.
Never connect power line to it.
2. The initial set values of switch on Control Board are as follows.
SW1:0
SW2:0
3. The wirings to TB01 and TB02 shown in dotted line are field work.

(Symbol explanation)

Symbol	Name	Symbol	Name
ACL	AC reactor	SV1	Solenoid valve
TH11~16,TH32~35, TH31a~p	Thermister sensor	F001	Fuse AC250V 6.3AFIH(TP)
		21S4Ma,21S4Mb	4 way valve
LEV1~3	Expansion valve	WP1,WP2	Pump
PS1,PS3	Pressure sensor	VB3a~p	Valve block
TB01	Terminal block (for power source)	FS	Float switch
		Z	Function setting connector
TB02	Terminal block (for Transmission)		

(5) TCMBS0108VB11N4

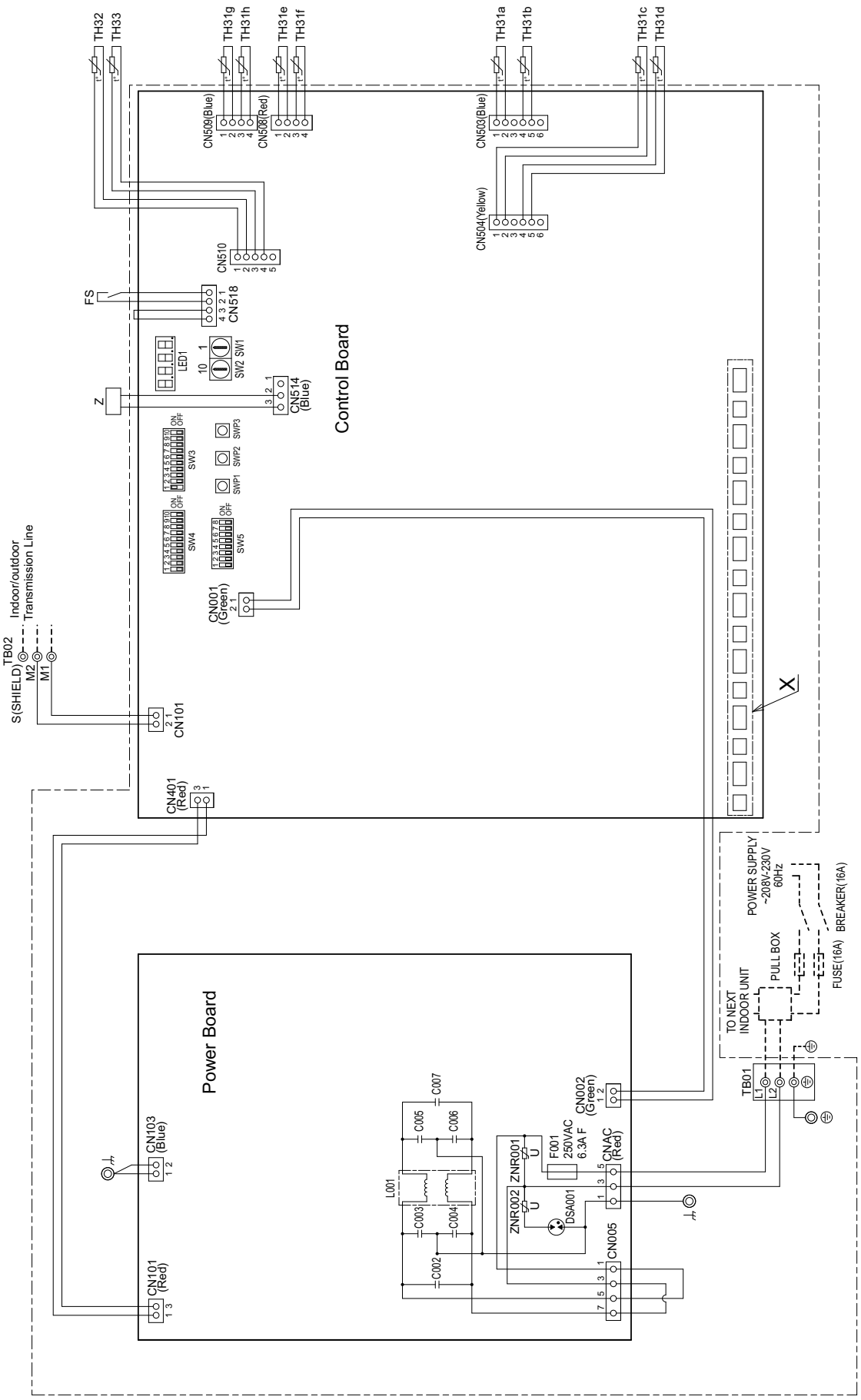

(6) TCMBS0108VB11N4 (Detail of X section)

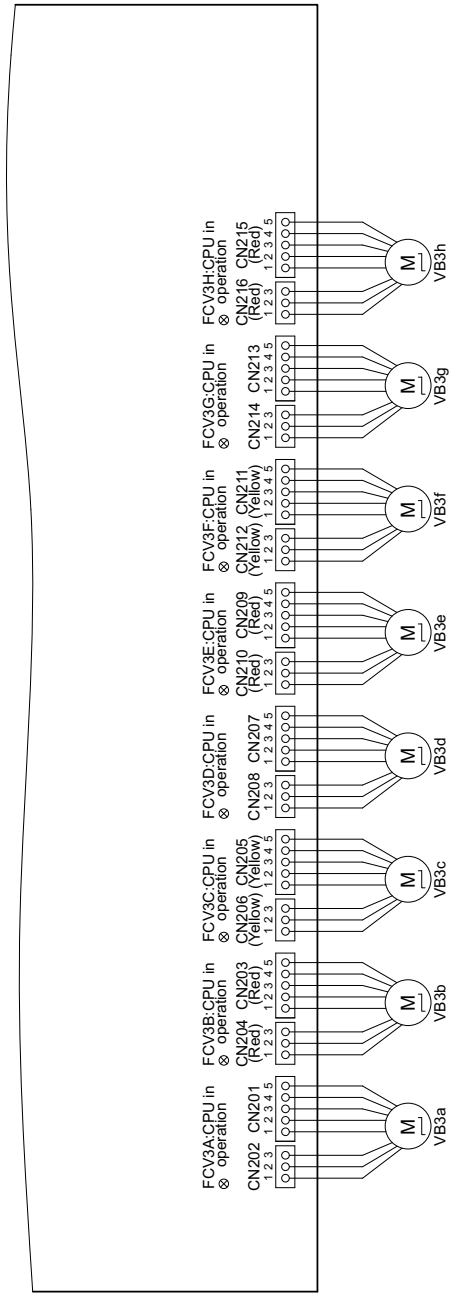

NOTE: 1. TB02 is transmission terminal block.
Never connect power line to it.
2. The initial set values of switch on Control Board are as follows.
SW1:0
SW2:0
3. The wirings to TB01 and TB02 shown in dotted line are field work.

(Symbol explanation)

Symbol	Name
TH31a~h,TH32,TH33	Thermister sensor
VB3a~h	Valve block
FS	Float switch
TB01	Terminal block (for power source)
TB02	Terminal block (for Transmission)
F001	Fuse AC250V 6.3A FIH(TP)
Z	Function setting connector

(7) TCMBS1016VB11N4

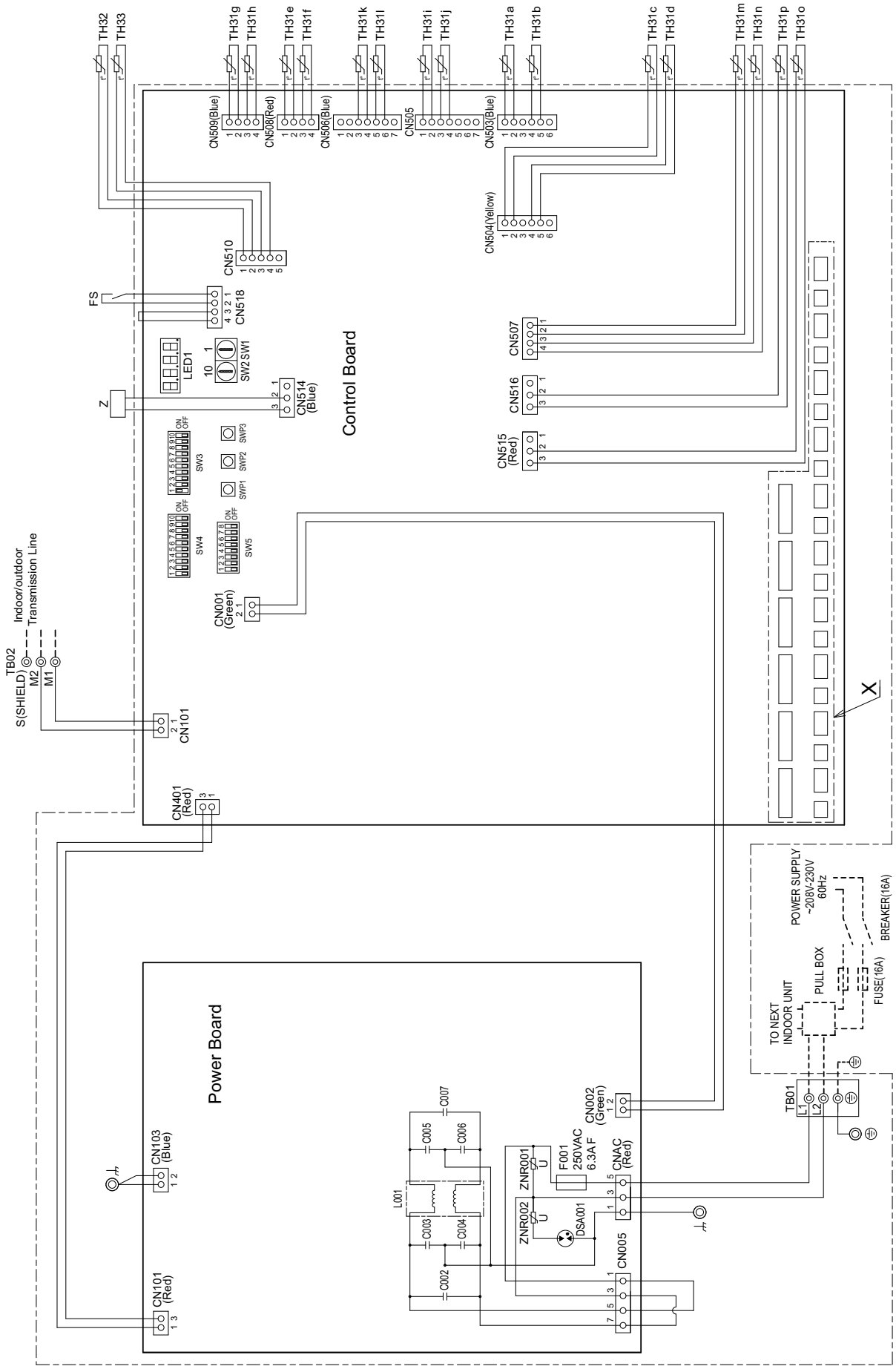

(8) TCMBS1016VB11N4 (Detail of X section)

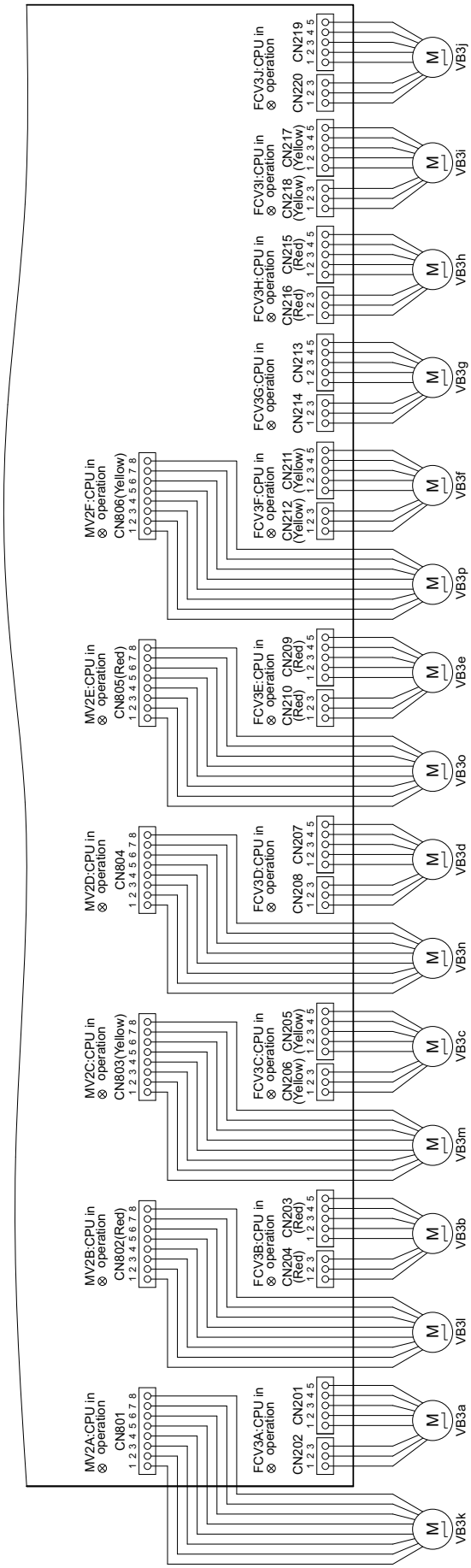

NOTE:1.TB02 is transmission terminal block.
Never connect power line to it.
2.The initial set values of switch on
Control Board are as follows.
SW1:0
SW2:0
3.The wirings to TB01 and TB02 shown in
dotted line are field work.

(Symbol explanation)

Symbol	Name
TH31a~p,TH32,TH33	Thermister sensor
VB3a~p	Valve block
FS	Float switch
TB01	Terminal block (for power source)
TB02	Terminal block (for Transmission)
F001	Fuse AC250V 6.3A FIH(TP)
Z	Function setting connector

[2] Electrical Wiring Diagram of Transmission Booster

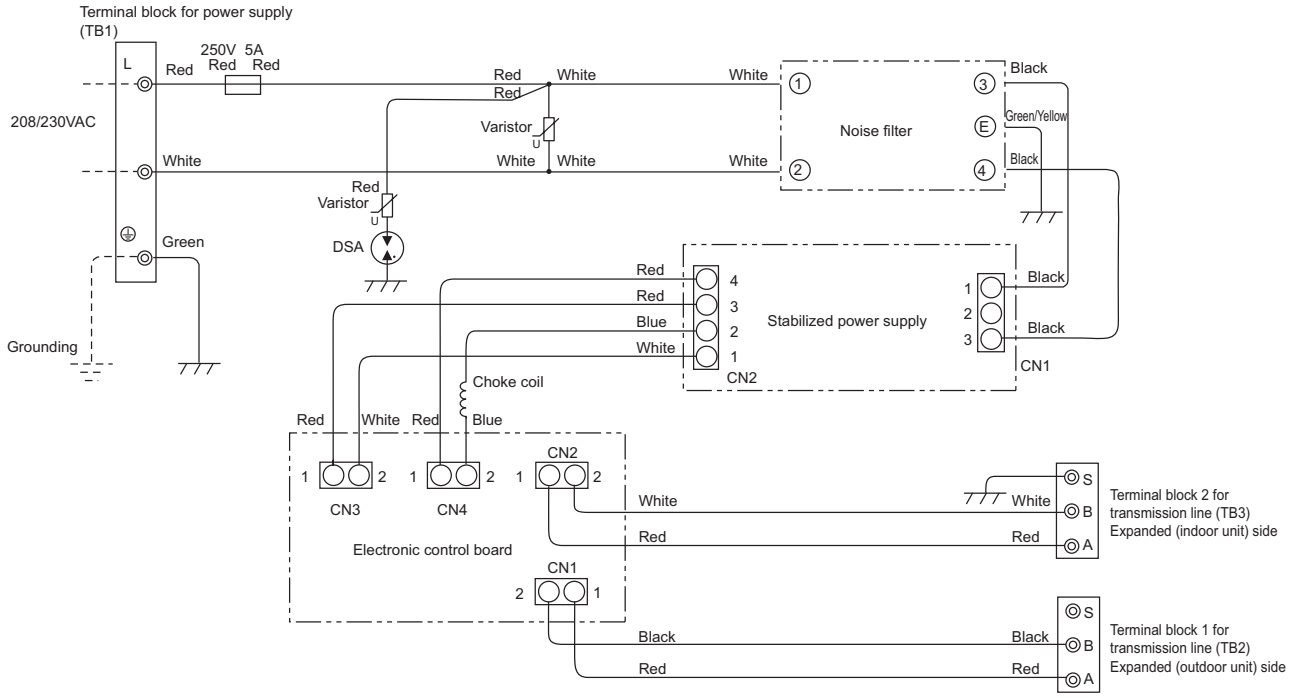

Ⅴ Refrigerant Circuit

[1] Refrigerant Circuit Diagram 67
[2] Principal Parts and Functions 70

[1] Refrigerant Circuit Diagram

1. HBC controller

(1) TCMBM0108VA11N4

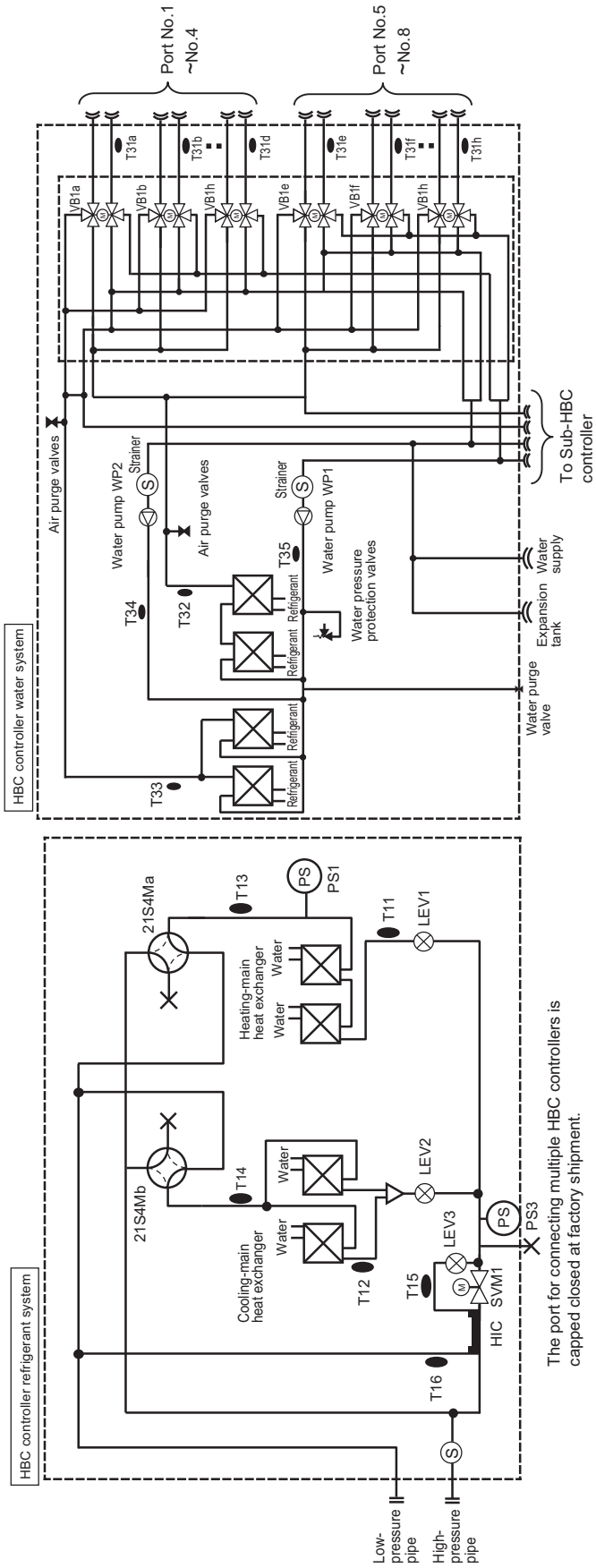

(2) TCMBM1016VA11N4

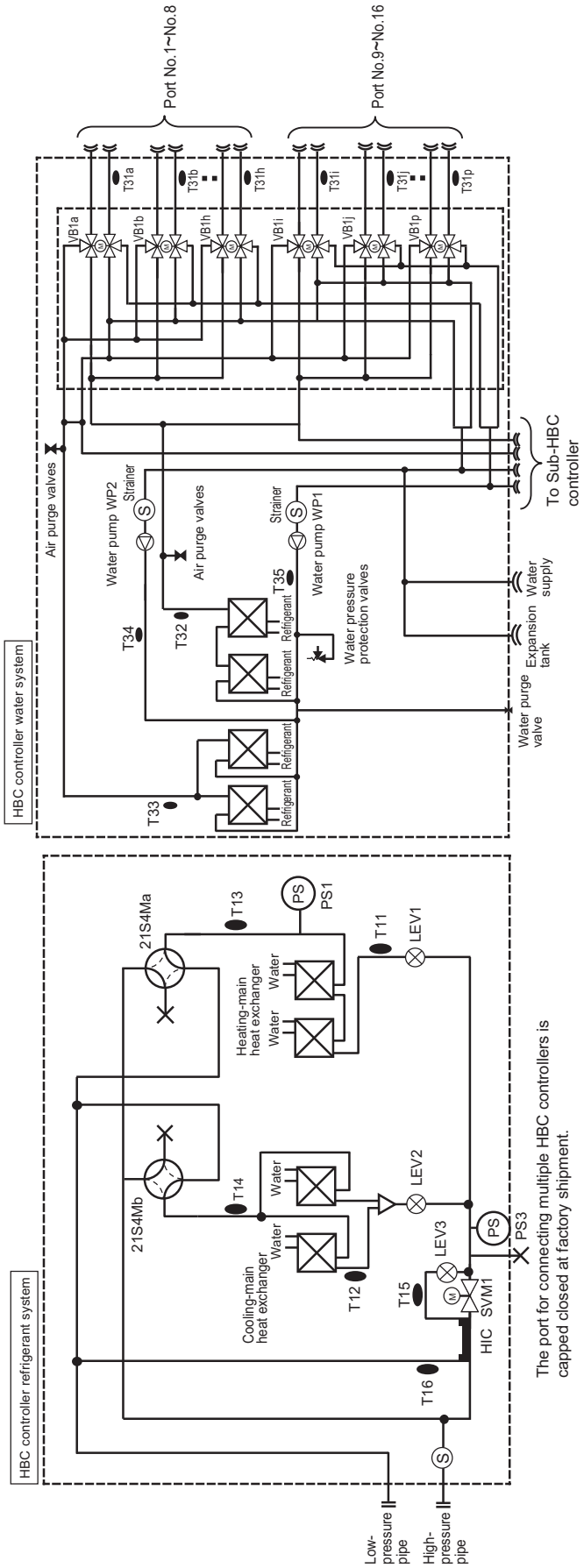

2. Sub-HBC controller

(1) TCMBS0108VB11N4

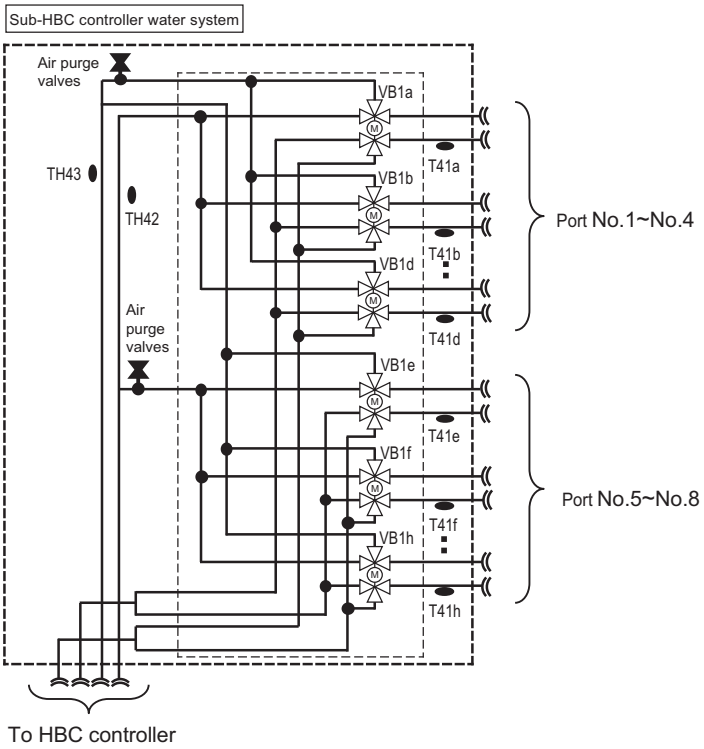

(2) TCMBS1016VB11N4

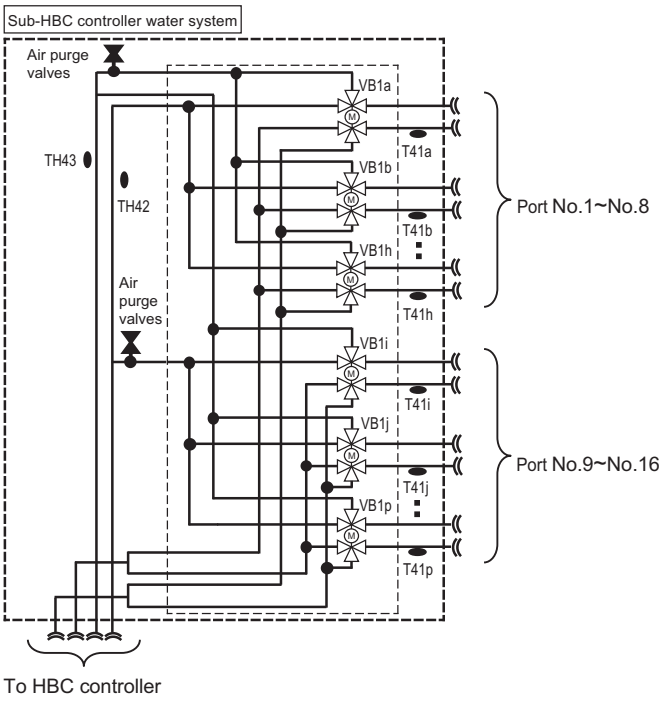

[2] Principal Parts and Functions

1. HBC controller

Part name	Symbols	Notes	Usage	Specifications	Check method
Solenoid valve	SVM1	Refrigerant side	Opens during the cooling mode and defrost cycle	AC208-230V Open when energized/ closed when de-energized	Continuity check with a tester
4-way valve	21S4Ma,b	Refrigerant side	Switches between heating and cooling	AC208-230V Open when energized/ closed when de-energized	Continuity check with a tester
LEV	LEV1	Refrigerant side	Supplies refrigerant to HEX1a and HEX1b	DC12V Opening of a valve driven by a stepping motor 0~3000 pulses	Continuity check with a tester. Continuity between white, red, and orange. Continuity between yellow, brown, and blue. 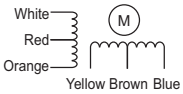
	LEV2	Refrigerant side	Supplies refrigerant to HEX2a and HEX2b		
	LEV3	Refrigerant side	Subcool control		
Thermistor	TH11,12, T13,14	Refrigerant side	Compressor frequency control LEV opening adjustment	$R_0 = 15k\Omega$ $R_{0/80} = 3460$ $R_t = 15\exp\{3460\,(\frac{1}{273+t} - \frac{1}{273})\}$ 0°C[32°F] : 15kohm 10°C[50°F] :9.7kohm 20°C[68°F] :6.4kohm 25°C[77°F] :5.3kohm 30°C[86°F] :4.3kohm 40°C[104°F] :3.1kohm	
	TH15,16		Bypass superheat amount adjustment		
	TH31a~p	Water side	Indoor unit circulating water control		
	TH32,33		Indoor unit circulating water control		
	TH34,35		Water pump error detection		
Pressure sensor	PS1 (high pressure side)	Refrigerant side	1) Detects high pressure 2) LEV control	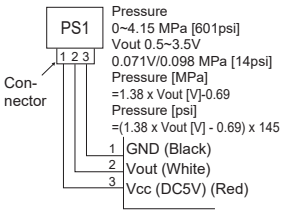	
	PS3 (medium pressure side)		1) Detects medium pressure 2) LEV control		
Valve block	VB1a~p*1	Water side	1) Switches the water flow path depending on the operation mode 2) Temperature difference control Controls the water flow to each indoor unit	DC12V Opening of a valve driven by a stepping motor*2	
Pump	PUMP1,2	Water side	Temperature difference control Controls the water flow to each indoor unit	Rated voltage DC268V Specified voltage DC0-6V	
Water pressure protection valve	CPV1	Water side	Trips when the internal pressure in the water circuit rises	Operating pressure: 560 kPa	

*1. The names of port "a" through "p" are corresponding to port 1 through 16.

*2. For the degree of valve opening, "0" or "1600" indicates fully open and "800" indicates fully closed.

2. Sub-HBC controller

Part name	Symbols	Notes	Usage	Specifications	Check method
Thermistor	TH41a~p*1	Water side	Indoor unit circulating water control	Same as the table above	
Valve block	VB1a~p*1	Water side	1) Switches the water flow path depending on the operation mode 2) Temperature difference control Controls the water flow to each indoor unit	DC12V Opening of a valve driven by a stepping motor*2	

*1. The names of port "a" through "p" are corresponding to port 1 through 16.

*2. For the degree of valve opening, "0" or "1600" indicates fully open and "800" indicates fully closed.

Ⅵ Control

[1] Functions and Factory Settings of the Dipswitches 75
[2] Controlling HBC Controller..... 76
[3] Operation Flow Chart..... 85

[1] Functions and Factory Settings of the Dipswitches

1. Switch functions <HBC controller> (Control board)

Switch		Function	Function according to switch setting		Switch setting timing
			OFF	ON	
SW3	1	Model setting	Preset before shipment		-
	2	-	-	-	-
	3	-	-	-	-
	4	-	-	-	-
	5	SVM1 ON fixed control	Not available	Available	Any time after being energized
	6 - 7	Pressure sensor backup	Error codes are not sent to outdoor units	Error codes are sent to outdoor units.	Any time after being energized
	8	-	-	-	-
	9	-	-	-	-
	10	Heat recovery defrost	Available	Not available	Before being energized
SW4	1	Debris removal run mode	Not available	Available	Any time after being energized
	2	-	-	-	-
	3	Test run air vent mode after strainer processing	Not available	Available	Any time after being energized
	4	Forced termination of a test run	Not available	Available	Any time after being energized
	5	Water tightness check	Not available (When the switch is set from ON to OFF, set the VB1 to the specified opening for stoppage.)	Available Two water pumps ON (output 30%) one minute after setting VB1 to 0 or 1600.	Any time after being energized (only when the control mode is stopped)
	6	Operation function 1 of the valve block	Not available	VB1=800	Any time after being energized
	7	-	-	-	-
	8	-	-	-	-
	9	-	-	-	-
	10	-	-	-	-
SW5	1	Water supply SW	Not available	Available: VB1=0 or 1600	Any time after being energized
	2	Air vent SW	Not available	Available	Any time after being energized
	3	-	-	-	-
	4	Compatible with antifreeze-liquid 1	Refer to the Databook.		
	5	Compatible with antifreeze-liquid 2			
	6	-	-	-	-
	7	-	-	-	-
	8	-	-	-	-

Note

- Shaded areas ( ) indicate factory settings.

[2] Controlling HBC Controller

-1- Water pump control

Depending on the capacity required, temperature difference on the indoor units is controlled so as to be within a certain range. During normal operation, the changes in specified voltage of the water pump corresponding to the capacity of connectable indoor units are shown in the graph below.

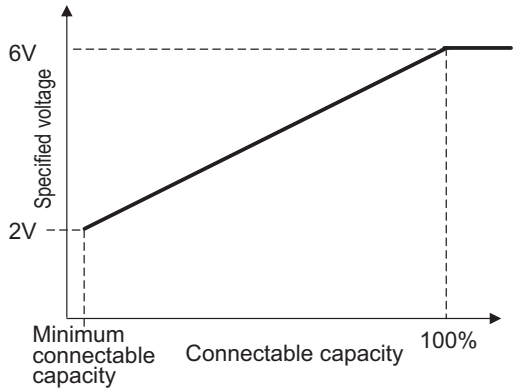

Note

The specified voltage changes with the load on the indoor unit side. (A sample is shown in the graph above.)

(1) Periodic specified voltage control

1) Periodic control cycle

Specified voltage control is performed after the following times have elapsed.

- Thirty seconds after either compressor startup or the completion of the defrost cycle

2) The amount of frequency change

The amount of specified voltage change is controlled to approximate the target value based on the target temperature difference.

-2- 4-way valve control

4-way valves (21S4M (a, b)) turn on or off according to the operation mode.
For 21S4Ma, ON indicates switching to the cooling side and OFF indicates switching to the heating side. For 21S4Mb, ON indicates switching to the heating side and OFF indicates switching to the cooling side. When energized: ON; When de-energized: OFF

No.	Operation mode	4-way valve control mode	4-way valve	
			21S4Ma	21S4Mb
1	Cooling-only	Cooling	ON	OFF
2		Cooling (Half HEX)	OFF	OFF
3	Cooling-main	Cooling-main	OFF	OFF
4	Heating-main	Heating-main	OFF	OFF
5	Heating-only	Warm heating	OFF	OFF
6		Heating	OFF	ON
7	Defrost	Defrost	The status before defrosting maintained	The status before defrosting maintained
8	Stopped	Stopped	OFF	OFF

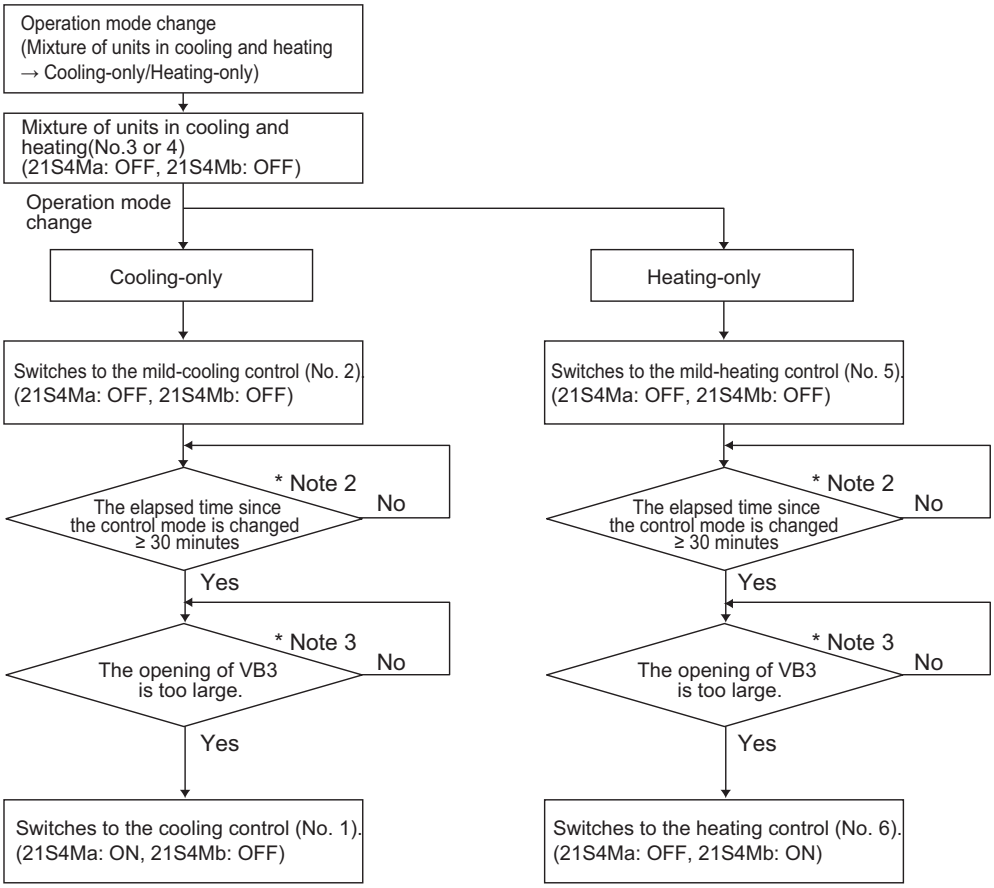

Note

1) Select the installation site carefully, as some noise may be produced when the 4-way valve is switched.
   Install the unit in a place where the noise from the unit will not be problem.
   (Install the indoor units and HBC controller at least 5m [16-6/16ft] away from each other when installing in a space with low background noise, e.g., hotel rooms.)
   Install the unit in the ceiling of an area that are not always occupied by people, e.g., hallway, office kitchen, restrooms. (Do not install the unit in the middle of a room.)
2) The elapsed time is used to reduce the switching frequency of the control modes between No. 1 or No. 6 AND No. 3 or No. 4.
3) Capacity control is determined depending on the opening of VB1 that adjusts the water flow rate.

-3- Valve block (VB1) water flow rate adjustment

- Depending on the capacity required, periodic control is performed every one minute to keep the temperature difference between the heat exchanger outlet pipe temperature and indoor unit port pipe temperature within 4.0ºC for cooling and 4.5ºC for heating, and the opening is controlled in the range between 85 and 700 (cooling) or 900 and 1600 (Heating) pulses.
  For the degree of valve opening, C800 or H800 indicate fully open and 0 indicates fully closed.

-4- Valve block (VB1) water flow path switching control

- The following table shows the control pattern of the 3-way valve in different operation modes to switch the water flow.

(1) Cooling-only Thermo-ON, Cooling-only Thermo-OFF, Cooling-only test run, Heating-only Thermo ON, and Heating-only Thermo OFF

Outdoor unit operation mode	Connected indoor unit operation mode	VB3 command value for opening
Cooling-only Thermo-ON Heating-only Thermo ON	Stop	1
	Fan	1
	Thermo-ON	2 or 3
	Thermo-OFF	1
Cooling-only Thermo-OFF Heating-only Thermo OFF	Stop	1
	Fan	1
	Thermo-OFF	1
Cooling-only test run	Stop	1
	Fan	1
	Thermo-ON	2 or 3
	Thermo-OFF	1

(2) Heating-main Thermo-ON, Heating-main Thermo-OFF, Cooling-main Thermo-ON, and Cooling-main Thermo-OFF

Outdoor unit operation mode	Connected indoor unit operation mode	VB3 command value for opening
Heating-main Thermo-ON Cooling-main Thermo-ON	Stop	1
	Fan	1
	Cooling Thermo-ON	2
	Cooling Thermo-OFF	1
	Heating Thermo-ON	3
	Heating Thermo-OFF	1
Heating-main Thermo-OFF Cooling-main Thermo-OFF	Stop	1
	Fan	1
	Cooling Thermo-OFF	1
	Heating Thermo-OFF	1

<Designated degree of valve opening>
- 1: 800 pulse
- 2: 85~700 pulses
- 3: 900~1600 pulses

-5- Bypass Control

Solenoid valves have two types: (SVM1) that bypass the high- and low- pressure sides; LEV (LEV3). They perform the following functions.

(1) Bypass solenoid valve (SVM1) (ON: open)

Operation mode	SVM1	
	ON	OFF
Cooling-only Thermo-ON	Always ON	
Cooling-main Thermo-ON	Always OFF	
Heating-only Thermo-ON	Always OFF	
Heating-main Thermo-ON	Always OFF	
Defrost	Always ON during heat recovery defrost	OFF except to perform heat recovery defrost
Stop	Always OFF	
Cooling-only Thermo-OFF	Always ON	
Thermo-OFF (Heating-only, Mixture of units in cooling and heating)	Always OFF	
Cooling-only test run	Always ON	
Test run for stop	Always ON	

-6- Plate heat exchanger control

(1) Cooling-only Thermo-ON and Cooling-only test run

- When three minutes have passed after the LEV operates with initial opening, the LEV opening is adjusted every 1 minute to keep the amount of superheat before and after the plate heat exchanger constant.

(2) Heating-only Thermo-ON

- When three minutes have passed after the LEV operates with initial opening, the LEV opening is adjusted every 1 minute to keep the amount of subcool before and after the plate heat exchanger constant.

(3) Cooling-main/Heating-main Thermo-ON and Cooling-main/Heating-main refrigerant recovery

1) Periodic control for LEV1

   The LEV opening is adjusted the same way as described in (2) Heating-only Thermo-ON and Heating-only refrigerant recovery.

2) Periodic control for LEV2

   To be fully open (3000)

-7- Defrost Operation Control

(1) Defrost cycle type

- The defrost cycle has following two types: Bypass defrost that is the same method as that used in a CITY MULTI series system and heat recovery defrost (default) that the heat is collected from the water circuit and the defrost cycle ends early.

The following figure shows the refrigerant flow for the bypass defrost. In the bypass defrost method, LEV1 and 2 are closed and the heat is not exchanged between the refrigerant and water. In the heat recovery defrost method, the defrost cycle ends early because the heat is caught from the water.
The basic defrost method is the heat recovery defrost with the dip switch 3-10 on the HBC controller turned OFF (default).
The bypass defrost may be performed depending on the water temperature. Setting the dip switch 3-10 to ON performs the bypass defrost.

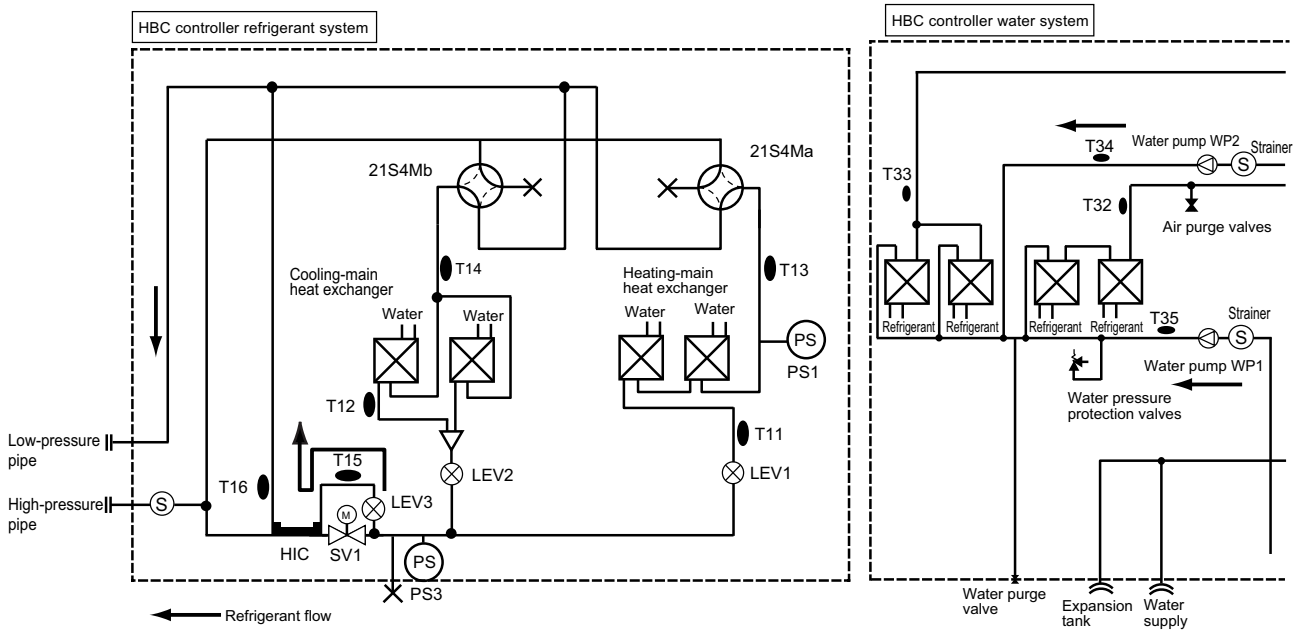

(2) Starting the defrost operation

Refer to the Service Handbook of the respective outdoor unit for information about defrost-start conditions.

(3) Defrost cycle

		Bypass defrost		Heat recovery defrost	
Outdoor Unit	Dip switch setting	SW3-10 ON		SW3-10 OFF	
	Operation mode	Heating-only	Heating-main	Heating-only	Heating-main
	Outdoor unit frequency	103Hz			
	Outdoor unit fan	Stop			
	SV1a	ON (open)			
	SV5b	ON (open)			
	21S4a, 21S4b	OFF			
	SV9	OFF (closed)			
HBC controller (other than 3-way valve and water flow rate control valve)	LEV1	41		3000	
	LEV2	41		3000	41
	LEV3	3000			
	SVM1	ON		OFF	
	21S4Ma	OFF			
	21S4Mb	ON		ON	OFF
	PUMP1	Scheduled control		Command value 100%	
	PUMP2	Scheduled control		Command value 100%	Scheduled control

HBC controller (3-way valve and water flow rate control valve)	Dip switch setting	SW3-10 ON			
	Indoor unit mode	Heating Thermo-ON	Heating Thermo-OFF	Cooling Thermo-ON	Cooling Thermo-OFF
	VB1a~p	Scheduled control	0	Scheduled control	0

HBC controller (3-way valve and water flow rate control valve)	Dip switch setting	SW3-10 OFF			
	Indoor unit mode	Heating Thermo-ON	Heating Thermo-OFF	Cooling Thermo-ON	Cooling Thermo-OFF
	VB1a~p	C800 or H800	0	Scheduled control	0

*The indoor unit fan will stop during defrost.

(4) Recovering from Defrost

- The setting of the dip switch 3-10 determines the defrost method (bypass defrost or heat recovery defrost).

As shown in the following flow chart, the bypass defrost may be performed during the heat recovery defrost depending on the operation status.

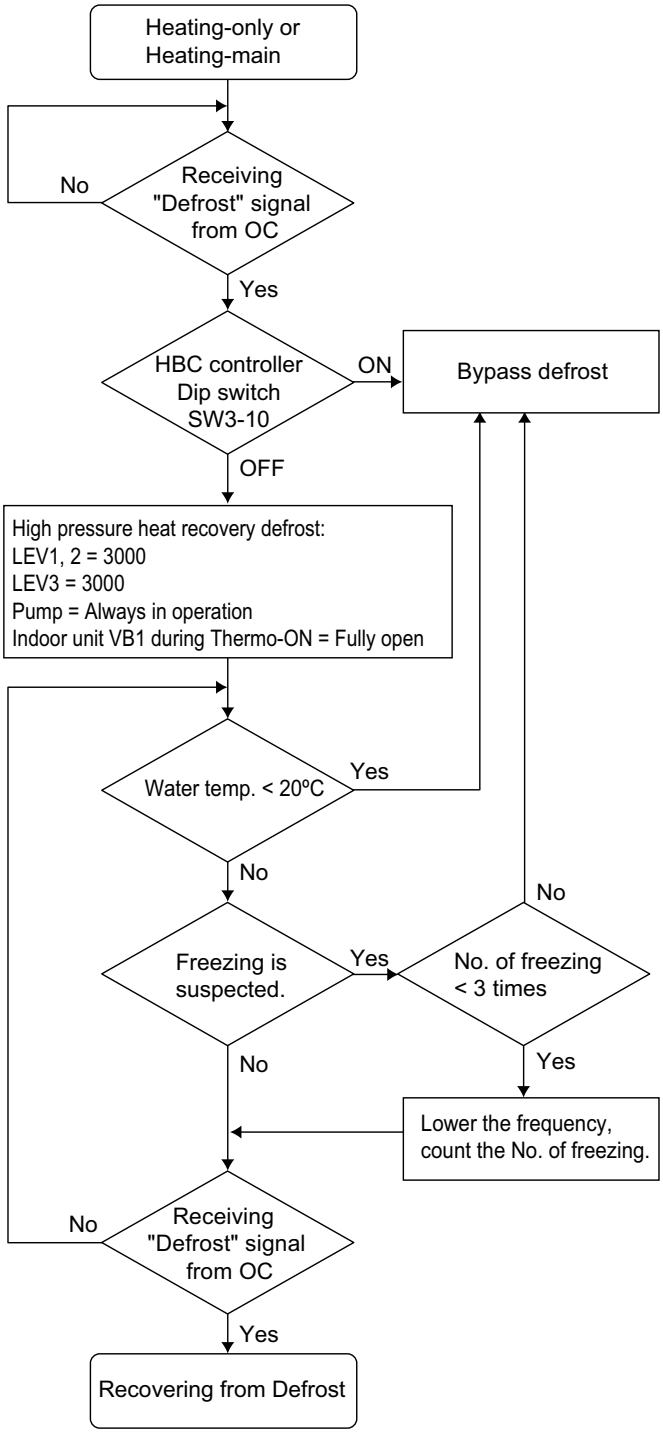

-8- Refrigerant Recovery Control

The refrigerant recovery control function controls the refrigerant flow at the HBC controller during heating operation to keep the refrigerant from collecting inside the HBC controller.
It is also performed during cooling operation to prevent an excessive amount of refrigerant from accumulating in the outdoor heat exchanger.

Starting criteria for the refrigerant recovery cycle (during Cooling-only, Cooling-main, Heating-only, or Heating-main mode)

The refrigerant recovery mode starts when all of the following conditions are met:

1) When 5 minutes have passed in the Heating-only or Heating-main mode or 30 seconds have passed in the Cooling-only or Cooling-main mode since the completion of the previous refrigerant recovery cycle AND the when following conditions are met.
   Outdoor unit TH4 > 105°C [221°F]
2) When the port is not in the 4-minute restart delay mode

Starting criteria for the refrigerant recovery cycle (during Cooling-only, Cooling-main, Heating-only, or Heating-main mode)

The opening of LEV1 and LEV2 on the HBC controller is increased.

-9- Backup control

The following backup control is started on the HBC controller as necessary.

(1) Backup mode for plate heat exchanger protection

- The following control is performed depending on the outlet pipe temperature of the plate heat exchanger for freeze-up protection.

[Cooling-main/Heating-main operation]

1) Outdoor unit (Heat source unit)

Cooling-main operation: Continued; Heating-main operation: Continued
Cooling-only operation: Thermo-OFF

2) HBC controller

		Control mode	
		Cooling-main/Heating-main	Cooling-only
Outdoor unit (Heat source unit)	Operation mode	Continues the current operation	Cooling-only Thermo-OFF
HBC controller	21S4Ma	Heating side: open (de-energized)	Cooling side: open (energized)
	21S4Mb	Cooling side: open (de-energized)	Cooling side: open (de-energized)
	LEV1	Maintains the opening that was used in the previous operation mode	Opening during Cooling-only Thermo-OFF
	LEV2	41 pulses: fully closed	Opening during Cooling-only Thermo-OFF
	LEV3	3000 pulses: fully open	Opening during Cooling-only Thermo-OFF
	SVM1	Closed	Open
	PUMP1	Continues the heating operation	Continues the cooling-only operation
	PUMP2	Continues the cooling operation	Continues the cooling-only operation
	VB1a~p	The opening depending on the indoor unit operation mode	The opening depending on the indoor unit operation mode

(2) Heating water temperature backup mode

- When the heating operation can be continued without receiving heat from the refrigerant due to water temperature rise during heating operation (the outlet pipe temperature of the plate heat exchanger is 50ºC or above), the outdoor unit goes into the Thermo-OFF mode, and the heating operation is performed only by circulating the hot water by the water pump. When the water temperature decreases to a certain level (the outlet temperature of the plate heat exchanger is 45ºC or below), the outdoor unit starts up.

-10- Water pump protection control

When the circuit is clogged or air enters the water circuit, the protection control starts on the HBC controller to protect the water pump and the system is stopped depending on the situation.

(1) When the internal temperature of the water pump increases

- When the detection temperature of the water pump outlet pipe is above a certain level, the water pump is stopped to protect it from the heat.

(2) When the revolutions of the water pump increases

- When the revolutions of the water pump is above a certain level (The value changes depending on the specified voltage.), the water pump is stopped to reduce the risk of air infiltration and water leaks.

[3] Operation Flow Chart

1. Mode determination flowchart

(1) Indoor unit (cooling, heating, dry, fan mode)

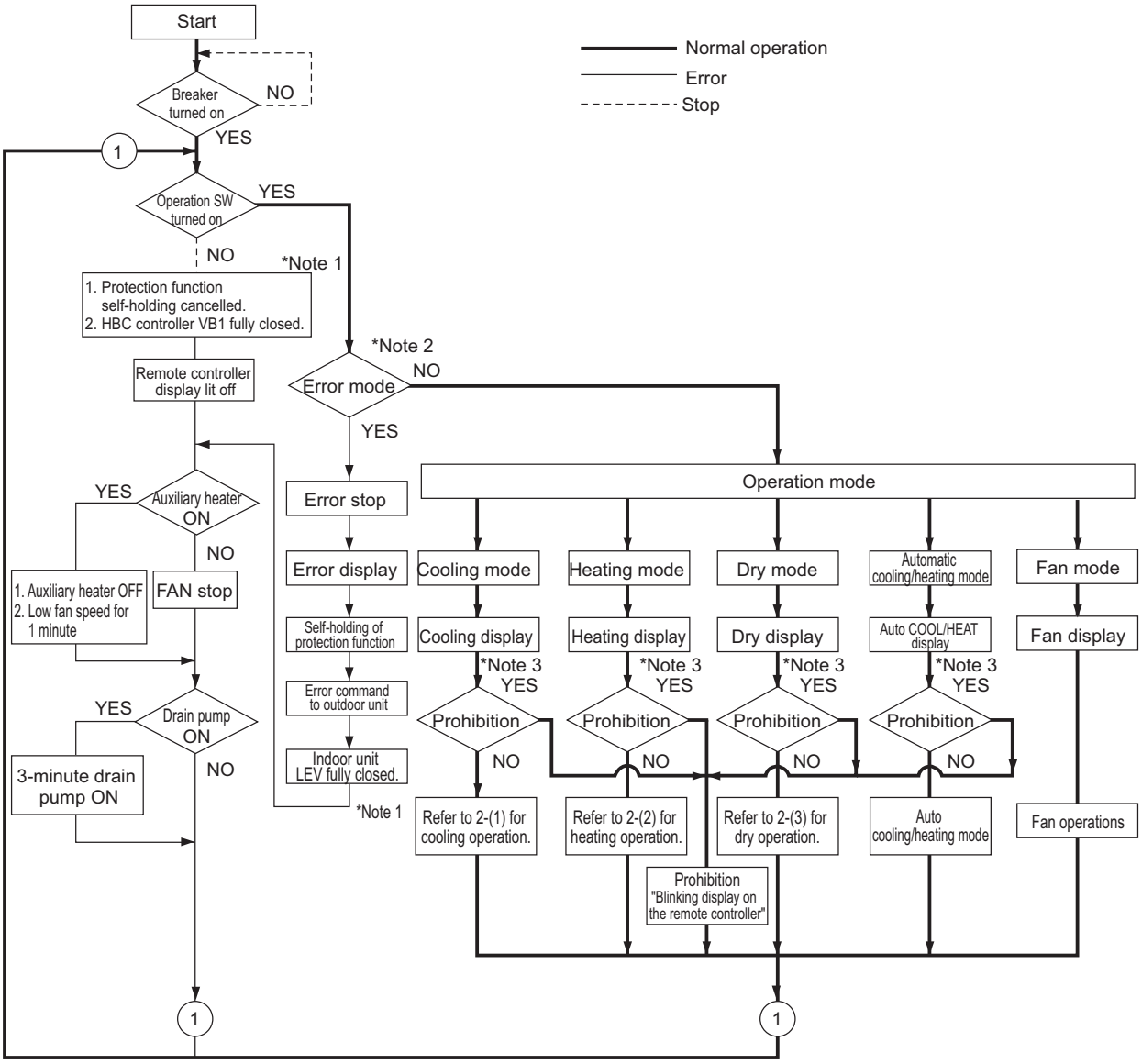

*Note 1. HBC controller VB1 fully closed : Opening 0.

*Note 2. The system may go into the error mode on either the indoor unit side or the HBC controller or outdoor unit side. If some of the indoor units are experiencing a problem, only those indoor units that are experiencing the problem will stop. If the HBC controller or the outdoor unit is experiencing a problem, all the connected units will stop.

*Note 3. If multiple indoor units are connected to a port and there is a discrepancy in the operation mode between the indoor unit and the port, the operation will be prohibited. (Operation mode blinks on the remote controller, the Fan stops, HBC controller VB1 becomes fully closed.)

(2) Outdoor unit (cooling only, heating only, cooling main and heating main modes) (Heat source unit)

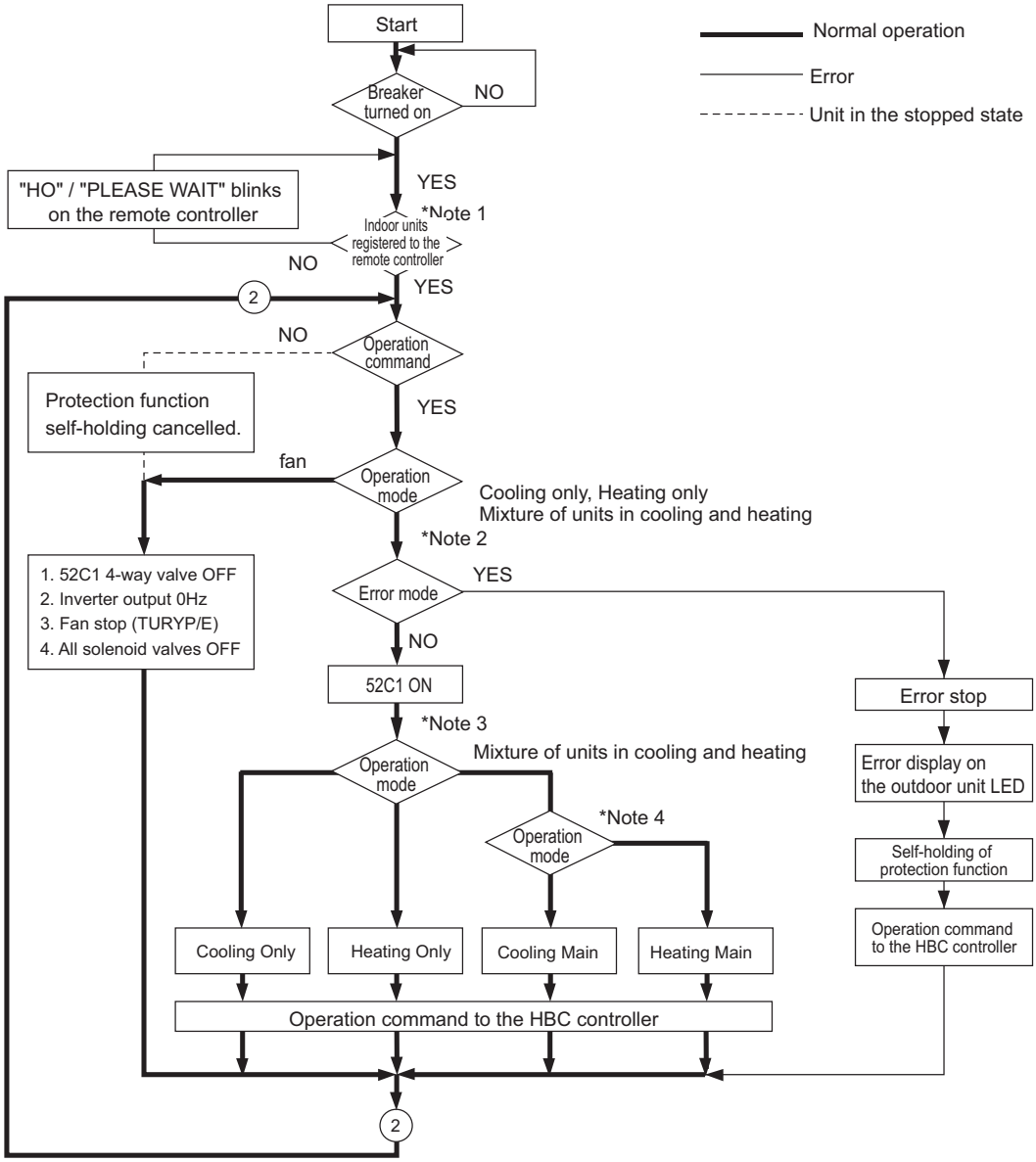

*Note 1. For approximately three minutes after power on, a search for the outdoor unit address, HBC controller address, indoor unit address, and remote controller address, and group information is performed. While this process is performed, "HO" and "PLEASE WAIT" blink on the display. If the indoor units have not been grouped with the remote controller, "HO" and "PLEASE WAIT" will keep blinking on the display, even after three minutes after power on.

*Note 2. The system may go into the error mode on the indoor unit, HBC controller, or the outdoor unit side. The outdoor units will stop only when all the indoor units are experiencing a problem. If at least one of the indoor units is in normal operation, the outdoor unit will continue in operation, displaying an error code on the LED.

*Note 3. The units will follow the operation mode commands from the HBC controller

*Note 4. When the operation mode commands from the HBC controllers are mixed (both cooling and heating), the actual operation mode is determined by the outdoor unit.

(3) HBC controller (cooling only, heating only, cooling main and heating main modes)

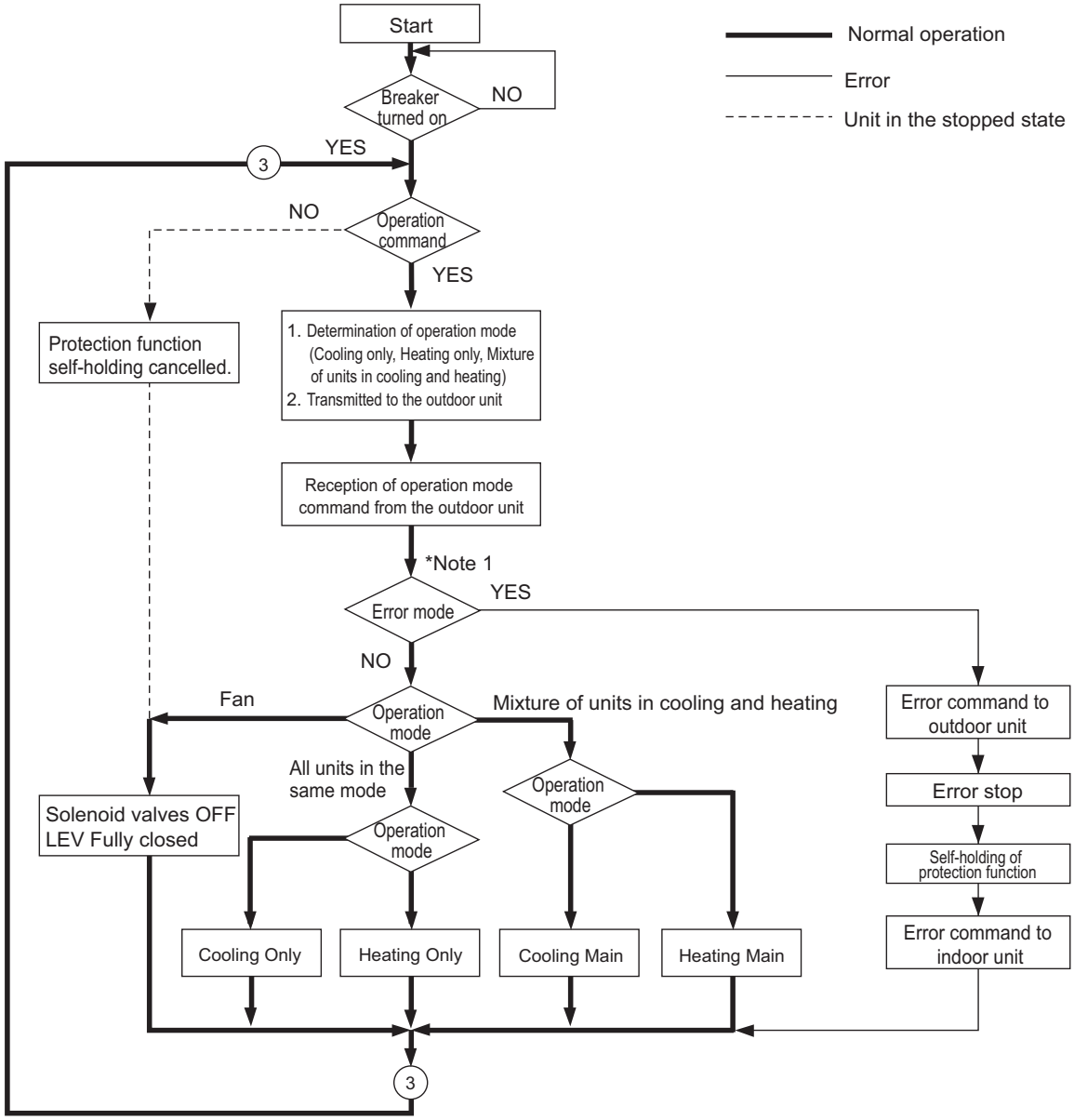

Note 1. The system may go into the error mode on either the indoor unit side or the HBC controller or outdoor unit side. If some of the indoor units are experiencing a problem, only those indoor units that are experiencing the problem will stop. If the HBC controller or the outdoor unit is experiencing a problem, all the connected units will stop.

2. Operations in each mode

(1) Cooling operation

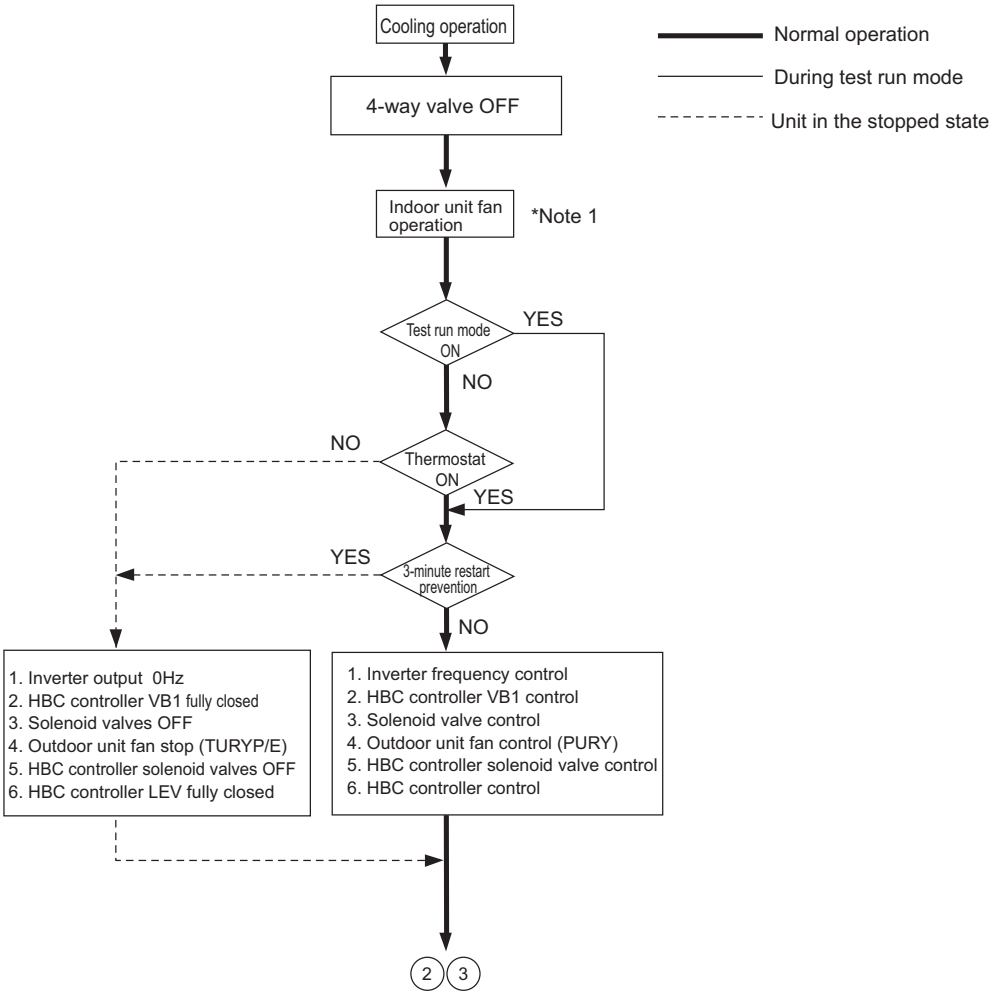

*Note 1. The indoor fan operates at the set notch under cooling mode regardless of the ON/OFF state of the thermostat.

(2) Heating operation

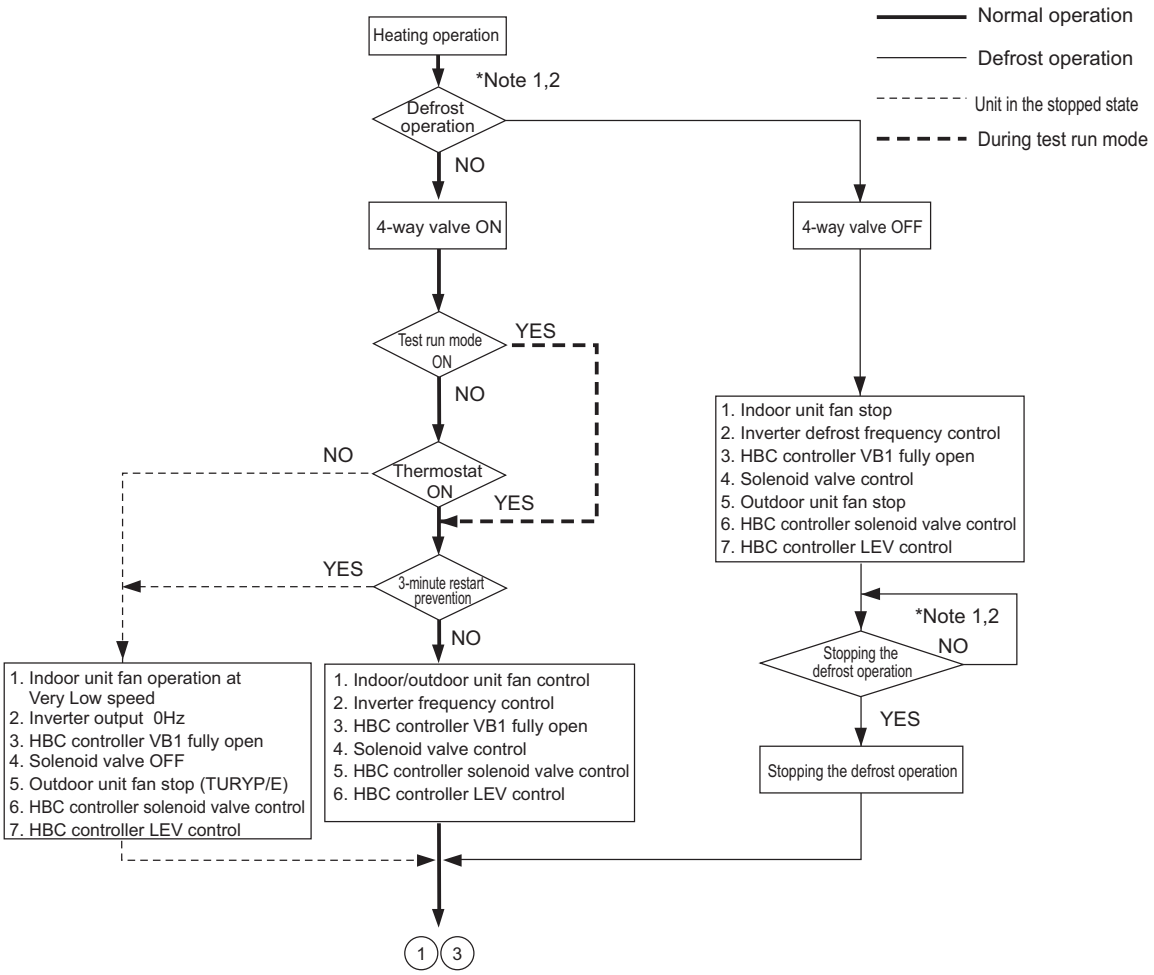

*Note 1. When the outdoor unit goes into the defrost mode (TURYP/E only), defrost command is sent to the HBC controller and indoor units.
Upon reception of the command, the indoor units will go into the defrost mode. When defrosting is completed and upon receiving the signal that indicates the completion of defrosting, indoor units will resume the heating operation.

*Note 2. Defrost end condition: 10 or more minutes must pass after defrost operation.
or Outdoor unit piping temperature : refer to "-7- Defrost operation control" of [2] Controlling HBC Controller (page 80)

(3) Dry operation

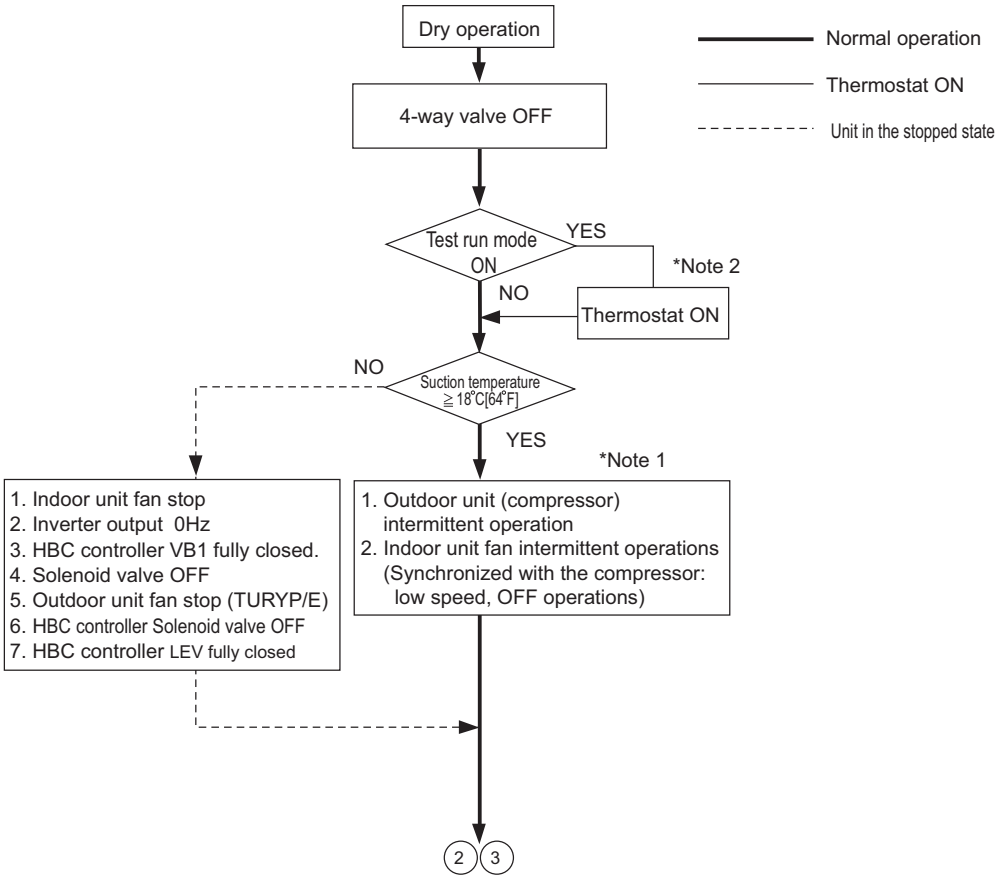

*Note 1.When the return air temperature reaches 18ºC [64ºF] or above, the outdoor unit (compressor) and the indoor unit fan will start a simultaneous intermittent operation. The operations of the outdoor unit, HBC controller, outdoor unit LEVs and solenoid valves that are performed when the compressor turns on are the same with the cooling operation.

*Note 2.Thermostat is always kept on during test run mode, and indoor and outdoor unit intermittent operation (ON) time is a little longer than that of normal operation.

VII Test Run Mode

[1] Read before Test Run.....93
[2] Operating Characteristic and Refrigerant Amount.....94
[3] Evaluating and Adjusting Refrigerant Charge.....94
[4] Refrigerant Amount Adjust Mode.....96
[5] The following symptoms are normal. 96

[1] Read before Test Run

(1) Check for refrigerant leak and loose cables and connectors.

(2) Measure the insulation resistance between the power supply terminal block and the ground with a 500V megger and make sure it reads at least 1.0Mohm.

Note

- Do not operate the unit if the insulation resistance is below 1.0Mohm.
- Do not apply megger voltage to the terminal block for transmission line. Doing so will damage the controller board.
- The insulation resistance between the power supply terminal block and the ground could go down to close to 1Mohm immediately after installation or when the power is kept off for an extended period of time because of the accumulation of refrigerant in the compressor.
- If insulation resistance reads at least 1Mohm, by turning on the main power and powering the belt heater for at least 12 hours, the refrigerant in the compressor will evaporate and the insulation resistance will go up.
- Do not measure the insulation resistance of the terminal block for transmission line for the unit remote controller.

(3) Make sure the valves on both the high-pressure and low-pressure sides are fully open.

Note

Securely tighten the cap.

(4) Check the phase sequence and the voltage of the power supply.

(5) [When a transmission booster is connected]
Turn on the transmission booster before turning on the outdoor units.

Note

- If the outdoor units are turned on first, the connection information for the refrigerant circuit may not be properly recognized.
- In case the outdoor units are turned on before the transmission booster is turned on, perform a power reset on the outdoor units after turning on the power booster.

(6) Turn on the main power to the unit at least 12 hours before test run to power the belt heater.

Note

Insufficient powering time may result in compressor damage.

(7) When a power supply unit is connected to the transmission line for centralized control, perform a test run with the power supply unit being energized. Leave the power jumper connector on CN41 as it is (factory setting).

[2] Operating Characteristic and Refrigerant Amount

It is important to have a clear understanding of the characteristics of refrigerant and the operating characteristics of air conditioners before attempting to adjust the refrigerant amount in a given system.

1. Operating characteristic and refrigerant amount

The following table shows items of particular importance.

1) During cooling operation, the amount of refrigerant in the accumulator is the smallest when all indoor units are in operation.
2) During heating operation, the amount of refrigerant in the accumulator is the largest when all indoor units are in operation.
3) General tendency of discharge temperature
   - Discharge temperature tends to rise when the system is short on refrigerant.
   - Changing the amount of refrigerant in the system while there is refrigerant in the accumulator has little effect on the discharge temperature.
   - The higher the pressure, the more likely it is for the discharge temperature to rise.
   - The lower the pressure, the more likely it is for the discharge temperature to rise.
4) When the amount of refrigerant in the system is adequate, the compressor shell temperature is 10 to 60°C [18 to 108°F] higher than the low pressure saturation temperature (Te).

   -> If the temperature difference between the compressor shell temperature and low pressure saturation temperature (Te) is smaller than 5°C [9°F], an overcharging of refrigerant is suspected.

[3] Evaluating and Adjusting Refrigerant Charge

1. Refrierant Overcharge and Undercharge

Overcharging or undercharging of refrigerant can cause the following symptoms:
Before attempting to adjust the amount of refrigerant in the system, thoroughly check the operating conditions of the system. Then, adjust the refrigerant amount by running the unit in the refrigerant amount adjust mode.

The system comes to an abnormal stop, displaying 1500 (overcharged refrigerant) on the controller.	Overcharged refrigerant
The operating frequency does not reach the set frequency, and there is a problem with performance.	Insufficient refrigerant amount
The system comes to an abnormal stop, displaying 1102 (abnormal discharge temperature) on the controller.	

2. Checking the Refrigerant Charge during Operation

Operate all indoor units in either cooling-only or heating-only mode, and check such items as discharge temperature, subcooling, low pressure, suction temperature, and shell bottom temperature to estimate the amount of refrigerant in the system.

Symptoms	Conclusion
Discharge temperature is high. (Normal discharge temperature is below 95°C [203°F].) *1	Slightly under-charged refrigerant
Low pressure is unusually low.	
Suction superheat is large. (Normal suction superheat is less than 20°C [36°F].)	
Compressor shell bottom temperature is high. (The difference between the compressor shell bottom temperature and low pressure saturation temperature (Te) is greater than 60°C [108°F].)	
Discharge superheat is small. (Normal discharge superheat is greater than 10°C [18°F].)	Slightly overcharged refrigerant
Compressor shell bottom temperature is low. (The difference between the compressor shell bottom temperature and low pressure saturation temperature (Te) is less than 5°C [9°F].)	

*1 Evaluate the refrigerant amount using other criteria during the injection control.

3. Maximum refrigerant charge

There is a limit to the amount of refrigerant that can be charged into a unit. Observe the maximum refrigerant charge in the table below.

♦TURYP072-168

Total index of the outdoor units	P072	P096	P120	P144	P168
Factory charge (kg) (oz)	5.2 (184)	8.0 (283)	8.0 (283)	10.8 (381)	10.8 (381)
Maximum additional refrigerant charge on site (kg) (oz)	21.0 (741)	25.4 (896)	25.4 (896)	33.1 (1168)	33.1 (1168)
Maximum refrigerant charge (kg) (oz)	26.2 (925)	33.4 (1179)	33.4 (1179)	43.9 (1549)	43.9 (1549)

♦TURYE072-168

Total index of the outdoor units	E072	E096	E120	E144	E168
Factory charge (kg) (oz)	5.2 (184)	8.0 (283)	8.0 (283)	10.8 (381)	10.8 (381)
Maximum additional refrigerant charge on site (kg) (oz)	21.0 (741)	25.4 (896)	25.4 (896)	33.1 (1168)	33.1 (1168)
Maximum refrigerant charge (kg) (oz)	26.2 (925)	33.4 (1179)	33.4 (1179)	43.9 (1549)	43.9 (1549)

♦TQRYP072-168

Total index of the outdoor units	P072	P096	P120	P144	P168
Factory charge (kg) (oz)	5.0 (177)	5.0 (177)	5.0 (177)	6.0 (212)	6.0 (212)
Maximum additional refrigerant charge on site (kg) (oz)	21.0 (741)	25.4 (896)	25.4 (896)	33.1 (1168)	33.1 (1168)
Maximum refrigerant charge (kg) (oz)	26.0 (918)	30.4 (1073)	30.4 (1073)	39.1 (1380)	39.1 (1380)

[4] Refrigerant Amount Adjust Mode

On the model of unit described in this document, the refrigerant charge cannot be adjusted.

[5] The following symptoms are normal.

Symptoms	Remote controller display	Cause
The auto vane adjusts its position by itself.	Normal display	After an hour of cooling operation with the auto vane in the vertical position, the vane may automatically move into the horizontal position. Louver blades will automatically move into the horizontal position while the unit is in the defrost mode, pre-heating stand-by mode, or when the thermostat triggers unit off.
The fan stops during heating operation.	Defrost	The fan remains stopped during defrost operation.
The fan keeps running after the unit has stopped.	Unlit	When the auxiliary heater is turned on, the fan operates for one minute after stopping to dissipate heat.
The fan speed does not reach the set speed when operation switch is turned on.	STAND BY	The fan operates at extra low speed for 5 minutes after it is turned on or until the pipe temperature reaches 35°C[95°F], then it operates at low speed for 2 minutes, and finally it operates at the set speed. (Pre-heating stand-by)
When the main power is turned on, the display shown on the right appears on the indoor unit remote controller for 5 minutes.	"HO" or "PLEASE WAIT" icons blink on the display.	The system is starting up. Wait until the blinking display of "HO" or "PLEASE WAIT" go off.
The drain pump keeps running after the unit has stopped.	Unlit	The drain pump stays in operation for three minutes after the unit in the cooling mode is stopped.
The drain pump is running while the unit is stopped.		When drain water is detected, the drain pump goes into operation even while the unit is stopped.
Indoor unit and HBC controller make noise during cooling/ heating changeover.	Normal display	This noise is made when the refrigerant circuit is reversed and is normal.
Sound of the refrigerant flow is heard from the indoor unit immediately after starting operation.	Normal display	This is caused by the transient instability of the refrigerant flow and is normal.
Warm air sometimes comes out of the indoor units that are not in the heating mode.	Normal display	This is due to the fact that the LEVs on some of the indoor units are kept slightly open to prevent the refrigerant in the indoor units that are not operating in the heating mode from liquefying and accumulating in the compressor. It is part of a normal operation.
The HBC controller makes refrigerant flow noise during defrost.	During defrost	This noise is produced by the high-pressure liquid refrigerant migrating into the HBC and evaporating. (This noise is normal.)

VIII Troubleshooting

[1] Error Code Lists 99
[2] Responding to Error Display on the Remote Controller 103
[3] Investigation of Transmission Wave Shape/Noise 151
[4] Troubleshooting Principal Parts 154
[5] Refrigerant Leak 166
[6] Servicing the HBC controller 168
[7] Instructions for debris removal operation 170
[8] Instructions for the air vent operation 171
[9] Instructions for the water pump replacement 172

[1] Error Code Lists

Error Code	Preliminary error code	Error (preliminary) detail code	Error code definition		Searched unit: Outdoor unit	Indoor unit	HBC controller	LOSSNAY	Remote controller	Notes
2500	-	-	Drain sensor submergence			O				
2501	-	-	Water pump error				O			
2502	-	-	Drain pump fault (float switch)			O	O			
			Untightened manual air vent valve			O				
2503	-	-	Drain sensor (Thd) fault			O		O		
2512	-	-	3-way valve/Water flow rate control valve fault				O			
4102	4152	-	Open phase		O					
4106	-	-	Transmission power supply fault		O					
4114	-	-	Indoor unit fan motor error			O				
4115	-	-	Power supply signal sync error		O					
5111	-	-	Temperature sensor fault (HBC controller)	Liquid-side refrigerant temp. of Heating-main heat exchanger (TH11)			O			
5112	-	-		Liquid-side refrigerant temp. of Cooling-main heat exchanger (TH12)			O			
5113	-	-		Gas-side refrigerant temp. of Heating-main heat exchanger (TH13)			O			
5114	-	-		Gas-side refrigerant temp. of Cooling-main heat exchanger (TH14)			O			
5115	-	-		Bypass inlet temperature (TH15)			O			
5116	-	-		Bypass outlet temperature (TH16)			O			
5132	–	–	Temperature sensor fault (HBC controller)	Water-side outlet temp. of Heating-main heat exchanger (TH32)			O			
5133	–	–		Water-side outlet temp. of Cooling-main heat exchanger (TH33)			O			
5134	–	–		Water pump WP2 outlet temperature (TH34)			O			
5135	–	–		Water pump WP1 outlet temperature (TH35)			O			

Error Code	Preliminary error code	Error (preliminary) detail code	Error code definition		Searched unit					Notes
					Outdoor unit	Indoor unit	HBC controller	LOSSNAY	Remote controller	
5141	–	–	Temperature sensor fault (HBC controller)	1st port returned water temp. (TH31a)			O			
5142	–	–		2nd port returned water temp. (TH31b)			O			
5143	–	–		3rd port returned water temp. (TH31c)			O			
5144	–	–		4th port returned water temp. (TH31d)			O			
5145	–	–		5th port returned water temp. (TH31e)			O			
5146	–	–		6th port returned water temp. (TH31f)			O			
5147	–	–		7th port returned water temp. (TH31g)			O			
5148	–	–		8th port returned water temp. (TH31h)			O			
5149	-	-		9th port returned water temp. (TH31i)			O			
5150	-	-		10th port returned water temp. (TH31j)			O			
5151	-	-		11th port returned water temp. (TH31k)			O			
5152	-	-		12th port returned water temp. (TH31l)			O			
5153	-	-		13th port returned water temp. (TH31m)			O			
5154	-	-		14th port returned water temp. (TH31n)			O			
5155	-	-		15th port returned water temp. (TH31o)			O			
5156	-	-		16th port returned water temp. (TH31p)			O			

Error Code	Preliminary error code	Error (preliminary) detail code	Error code definition		Searched unit					Notes
					Outdoor unit	Indoor unit	HBC controller	LOSSNAY	Remote controller	
5161	-	-	Temperature sensor fault (Sub-HBC)	1st port returned water temp. (TH41a)			O			
5162	-	-		2nd port returned water temp. (TH41b)			O			
5163	-	-		3rd port returned water temp. (TH41c)			O			
5164	-	-		4th port returned water temp. (TH41d)			O			
5165	-	-		5th port returned water temp. (TH41e)			O			
5166	-	-		6th port returned water temp. (TH41f)			O			
5167	-	-		7th port returned water temp. (TH41g)			O			
5168	-	-		8th port returned water temp. (TH41h)			O			
5169	-	-		9th port returned water temp. (TH41i)			O			
5170	-	-		10th port returned water temp. (TH41j)			O			
5171	-	-		11th port returned water temp. (TH41k)			O			
5172	-	-		12th port returned water temp. (TH41l)			O			
5173	-	-		13th port returned water temp. (TH41m)			O			
5174	-	-		14th port returned water temp. (TH41n)			O			
5175	-	-		15th port returned water temp. (TH41o)			O			
5176	-	-		16th port returned water temp. (TH41p)			O			
5177	-	-		Water-side outlet temp. of Heating-main heat exchanger (TH42)			O			
5178	-	-		Water-side outlet temp. of Cooling-main heat exchanger (TH43)			O			
5201	1402	-	High-pressure sensor fault (Outdoor unit HPS/HBC controller PS1)		O		O			
5301	4300	[115]	ACCT sensor fault		O					
		[117]	ACCT sensor circuit fault		O					
		[119]	Open-circuited IPM/Loose ACCT connector		O					
		[120]	Faulty ACCT wiring		O					
5701	-	-	Loose float switch connector			O				
6600	-	-	Address overlaps		O	O	O	O	O	

Error Code	Preliminary error code	Error (preliminary) detail code	Error code definition	Searched unit					Notes
				Outdoor unit	Indoor unit	HBC controller	LOSSNAY	Remote controller	
6601	-	-	Polarity setting error					O	
6602	-	-	Transmission processor hardware error	O	O	O	O	O	
6603	-	-	Transmission line bus busy error	O	O	O	O	O	
6606	-	-	Communication error between device and transmission processors	O	O	O	O	O	
6607	-	-	No ACK error	O	O	O	O	O	
6608	-	-	No response error	O	O	O	O	O	
7100	-	-	Total capacity error	O					
7101	-	-	Capacity code setting error	O	O		O		
7102	-	-	Wrong number of connected units	O		O			
7105	-	-	Address setting error	O					
7106	-	-	Attribute setting error				O		
7107	-	-	Port setting error			O			
7110	-	-	Connection information signal transmission/reception error	O					
7113	-	-	Function setting error	O					
7117	-	-	Model setting error	O					
7130	-	-	Incompatible unit combination	O					

[2] Responding to Error Display on the Remote Controller

1. Error Code

2500

Drain sensor submergence (Models with a drain sensor)

2. Error definition and error detection method

1) If an immersion of the drain sensor in the water is detected while the unit is in any mode other than the Cool/Dry mode and when the drain pump goes from OFF to ON, this condition is considered preliminary water leakage. While this error is being detected, humidifier output cannot be turned on.
2) If the immersion of the sensor in the water is detected four consecutive times at an hour interval, this is considered water leakage, and "2500" appears on the monitor.
3) Detection of water leakage is also performed while the unit is stopped.
4) Preliminary water leakage is cancelled when the following conditions are met:

- One hour after the preliminary water leakage was detected, it is not detected that the drain pump goes from OFF to ON.
- The operation mode is changed to Cool/Dry.
- The liquid pipe temperature minus the inlet temperature is -10°C [-18°F] or less.

3. Cause, check method and remedy

Cause	Check method and remedy
(1) Drain water drainage problem ・Clogged drain pump ・Clogged drain piping ・Backflow of drain water from other units	Check for proper drainage.
(2) Adhesion of water drops to the drain sensor ・Trickling of water along the lead wire ・Rippling of drain water caused by filter clogging	1) Check for proper lead wire installation. 2) Check for clogged filter.
(3) Failure of the relay circuit for the solenoid valve	Replace the relay.
(4) Indoor unit control board failure ・Drain sensor circuit failure	If the above item checks out OK, replace the indoor unit control board.

1. Error Code

2500

Drain sensor submergence (Models with a float switch)

2. Error definition and error detection method

1) If an immersion of the float switch in the water is detected while the unit is in any mode other than the Cool/Dry mode and when the drain pump goes from OFF to ON, this condition is considered preliminary water leakage. While this error is being detected, humidifier output cannot be turned on.
2) If the drain pump turns on within one hour after preliminary water leakage is detected and the above-mentioned condition is detected two consecutive times, water leakage error water leakage is detected, and "2500" appears on the monitor.
3) Detection of water leakage is also performed while the unit is stopped.
4) Preliminary water leakage is cancelled when the following conditions are met:

- One hour after the preliminary water leakage was detected, it is not detected that the drain pump goes from OFF to ON.
- The operation mode is changed to Cool/Dry.
- The liquid pipe temperature minus the inlet temperature is - 10°C [-18°F] or less.

3. Cause, check method and remedy

Cause	Check method and remedy
(1) Drain water drainage problem ・Clogged drain pump ・Clogged drain piping ・Backflow of drain water from other units	Check for proper drainage.
(2) Stuck float switch Check for slime in the moving parts of the float switch.	Check for normal operation of the float switch.
(3) Float switch failure	Check the resistance with the float switch turned on and turned off.

<Reference>

Drain pump operation triggered by a submergence of the liquid level sensor (except during the Cooing/Dry mode)

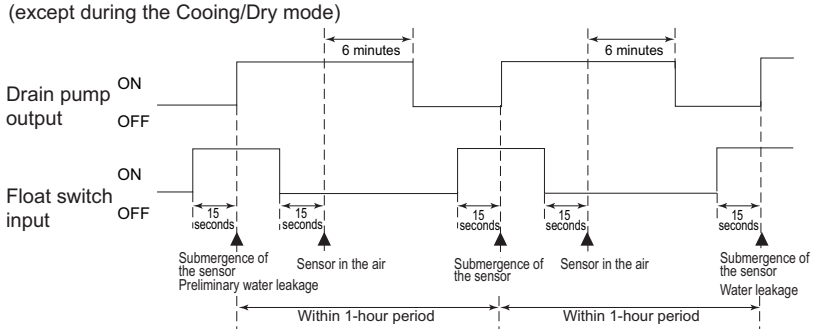

1. Error Code

2501

Water pump fault

2. Error definition and error detection method

- When clogged water circuit or water leaks from the water circuit is detected, the water pump is stopped for protection.
- When the following statuses are detected, the pump will be stopped.
  - ∗The revolutions of the water pump exceeds the specific range.
  - ∗Pump discharge port: TH34, TH35 > 53ºC [127ºF]

3. Cause, check method and remedy

Cause	Check method and remedy
(1) Water circuit is clogged.	1) Check for tightened water flow rate control valves or field-installed valves.
(2) Water leaks from the water circuit	2) Check the pump for proper sound. If there is air in the circuit, it makes a noise.
(3) Air infiltration through the air vent valve	3) Check that any air vent valves are not installed in the water circuit on the suction side water pump. If an air vent valve is installed in the water circuit on the suction side water pump, it will cause the air infiltration.
(4) Broken or semi-broken thermistor wire	4) Check for a broken thermistor wire.
(5) Thermistor failure	5) Check the resistance of the thermistor. 0°C [32°F] : 6.0kΩ 10°C [50°F] : 3.9kΩ 20°C [68°F]: 2.6kΩ 30°C [86°F] : 1.8kΩ 40°C [104°F] : 1.3kΩ
(6) Semi-broken pump wire	6) Check for semi-broken pump wires.

- If a sudden water leak occurs, replace the water pressure protection valves because they may be the cause.

1. Error Code

2502

Drain pump fault (Models with a drain sensor)

2. Error definition and error detection method

1) Make the drain sensor thermistor self-heat. If the temperature rise is small, it is interpreted that the sensor is immersed in water. This condition is considered to be a preliminary error, and the unit goes into the 3-minute restart delay mode.
2) If another episode of the above condition is detected during the preliminary error, this is considered a drain pump error, and "2502" appears on the monitor.
3) This error is always detected while the drain pump is in operation.
4) The following criteria are met when the criteria for the forced stoppage of outdoor unit (system stoppage) are met.
   ∗"Liquid pipe temperature - inlet temperature ≤ -10°C [-18 °F] " has been detected for 30 minutes.
   ∗The immersion of drain sensor is detected 10 consecutive times.
   ∗The conditions that are listed under items 1) through 3) above are always met before the criteria for the forced stoppage of the outdoor unit.
5) The indoor unit that detected the conditions that are listed in item 4) above brings the outdoor unit in the same refrigerant circuit to an error stop (compressor operation prohibited), and the outdoor unit brings all the indoor units in the same refrigerant circuit that are in any mode other than Fan or Stop to an error stop. "2502" appears on the monitor of the units that came to an error stop.
6) Forced stoppage of the outdoor unit
   Detection timing: The error is detected whether the unit is in operation or stopped.
7) Ending criteria for the forced stoppage of outdoor unit
   Power reset the indoor unit that was identified as the error source and the outdoor unit that is connected to the same refrigerant circuit.
   Forced stoppage of the outdoor unit cannot be cancelled by stopping the unit via the remote controller.
   (Note) Items 1) - 3) and 4) - 7) are detected independently from each other.

Note

The address and attribute that appear on the remote controller are those of the indoor unit (or OA processing unit) that caused the error.

3. Cause, check method and remedy

Cause	Check method and remedy
(1) Drain pump failure	Check for proper functioning of the drain pump.
(2) Drain water drainage problem •Clogged drain pump •Clogged drain piping	Check for proper drainage.
(3) Adhesion of water drops to the drain sensor •Trickling of water along the lead wire •Rippling of drain water caused by filter clogging	1) Check for proper lead wire installation. 2) Check for clogged filter.
(4) Indoor unit control board failure •Drain pump drive circuit failure •Drain heater output circuit failure	If the above item checks out OK, replace the indoor unit control board.
(5) Items (1) through (4) above and an indoor unit electronic valve closure failure (leaky valve) occurred simultaneously.	Check the solenoid valves on the indoor unit for leaks.

1. Error Code

2502

Drain pump fault (Models with a float switch)

2. Error definition and error detection method

1) The immersion of sensor tip in water is detected by the ON/OFF signal from the float switch.
   ∗Submergence of the sensor
   When it is detected that the float switch has been ON for 15 seconds, it is interpreted that the sensor tip is immersed in water.
   ∗Sensor in the air
   When it is detected that the float switch has been OFF for 15 seconds, it is interpreted that the sensor tip is not immersed in water.
2) If it is detected that the float switch has been ON for 3 minutes after the immersion of the sensor tip was detected, this is considered a drain pump failure, and "2502" appears on the monitor.
   ∗The total time it takes for this error to be detected is 3 minutes and 15 seconds, including the time it takes for the first immersion of the sensor tip to be detected.
3) Detection of drain pump failure is performed while the unit is stopped.
4) The following criteria are met when the criteria for the forced stoppage of outdoor unit (system stoppage) are met.
   ∗"Liquid pipe temperature - inlet temperature ≦ - 10°C [-18°F] " has been detected for 30 minutes.
   ∗It is detected by the float switch that the sensor tip has been immersed in water for 15 minutes or more.
   ∗The conditions that are listed under items 1) through 3) above are always met before the criteria for the forced stoppage of the outdoor unit.
5) The indoor unit and HBC controller that detected the conditions that are listed in item 4) above brings the outdoor unit in the same refrigerant system to an abnormal stop (compressor operation prohibited), and the outdoor unit brings all the indoor units and HBC controller in the same refrigerant system that are in any mode other than Fan or Stop to an abnormal stop. "2502" appears on the monitor of the units that came to an abnormal stop.
6) Forced stoppage of the outdoor unit
   Detection timing: The error is detected whether the unit is in operation or stopped.
   This error is detected whether the unit is in operation or stopped.
7) Ending criteria for the forced stoppage of outdoor unit
   Power reset the indoor unit that was identified as the error source and the outdoor unit that is connected to the same refrigerant circuit.
   Forced stoppage of the outdoor unit cannot be cancelled by stopping the unit via the remote controller.
   (Note) Items 1) - 3) and 4) - 7) are detected independently from each other.

Note

The address and attribute that appear on the remote controller are those of the indoor unit (or OA processing unit) that caused the error.

3. Cause, check method and remedy

Cause		Check method and remedy
(1)	Drain pump failure	Check for proper functioning of the drain pump mechanism
(2)	Drain water drainage problem •Clogged drain pump •Clogged drain piping	Check for proper drainage.
(3)	Stuck float switch Check for slime in the moving parts of the float switch.	Check for normal operation of the float switch.
(4)	Float switch failure	Check the resistance with the float switch turned on and turned off.
(5)	Indoor unit/HBC controller control board fault •Drain pump drive circuit failure •Float switch input circuit failure	Replace indoor unit control board.
(6)	Items (1) through (5) above and an indoor unit electronic valve closure failure (leaky valve) occurred simultaneously.	Check the solenoid valves on the indoor unit for leaks.
(7)	Untightened manual air vent valve	Visual/Manual inspection

•If a sudden water leak occurs, replace the water pressure protection valves because they may be the cause.
•During water supply or air vent operation, set the Dip SW 5-2 from OFF to ON. (This error is ignored for nine hours.)

1. Error Code

2503

Drain sensor (Thd) fault

2. Error definition and error detection method

- If the open or short circuit of the thermistor has been detected for 30 seconds, this condition is considered to be a preliminary error, and the unit goes into the 3-minute restart delay mode.
- If another episode of the above condition is detected during the preliminary error, this is considered a drain sensor error.(If the short or open circuit of the thermistor is no longer detected, normal operation will be restored in 3 minutes.)
- This error is detected when one of the following conditions are met.
  - ∗During Cool/Dry operation
  - ∗Liquid pipe temperature minus inlet temperature is equal to or smaller than - 10°C [-18°F] (except during the defrost cycle)
  - ∗When the liquid temperature thermistor or suction temperature thermistor or short or open circuited.
  - ∗Drain pump is in operation.
  - ∗One hour has elapsed since the drain sensor went off.

    Short: 90°C [194 °F] or above
    Open: - 20°C [-4 °F] or below

3. Cause, check method and remedy

Cause	Check method and remedy
(1) Faulty connector (CN31) insertion.	1) Check for connector connection failure. Reinsert the connector, restart the operation, and check for proper operation.
(2) Broken or semi-broken thermistor wire	2) Check for a broken thermistor wire.
(3) Thermistor failure	3) Check the resistance of the thermistor. 0°C[32 °F]:6.0kΩ 10°C[50 °F]:3.9kΩ 20°C[68°F]:2.6kΩ 30°C[86°F]:1.8kΩ 40°C[104 °F]:1.3kΩ
(4) Indoor unit control board (error detection circuit) failure	4) Replace the indoor unit control board if the problem recurs when the unit is operated with the No.-1 and No.-2 pins on the drain sensor connector (CN31) being short-circuited. If the above item checks out OK, there are no problems with the drain sensor. Turn off the power and turn it back on.

1. Error Code

2512

Valve block fault

2. Error definition and error detection method

♦Limit signal that is output from valve block is not detected or is not reset after it is detected.

3. Cause, check method and remedy

Cause	Check method and remedy
(1) Loose connectors, wiring fault (2) Valve block fault	When the LEDs on the control board (VB3a-VB3p) are lit, check the valve block whose LED is lit for loose connectors, wiring fault, and proper operation. When the LEDs described above are not lit, check all the valve block for proper operation.
(3) Control board fault	If no problems are found with the above items, replace the control board.

1. Error Code

4102

Open phase

2. Error definition and error detection method

- An open phase of the power supply (L1 phase, N phase) was detected at power on.
- The L3 phase current is outside of the specified range.

Note

The open phase of the power supply may not always be detected if a power voltage from another circuit is applied.

3. Cause, check method and remedy

Cause	Check method and remedy
(1) Power supply problem ・Open phase voltage of the power supply ・Power supply voltage drop	Check the input voltage to the power supply terminal block TB1.
(2) Noise filter problem ・Coil problem ・Circuit board failure	・Check the coil connections. ・Check for coil burnout. ・Confirm that the voltage at the CN3 connector is 198 V or above.
(3) Wiring failure	Confirm that the voltage at the control board connector CNAC is 198 V or above. If the voltage is below 198V, check the wiring connection between the noise filter board CN3, noise filter board CN2 and control board CNAC. Confirm that the wiring between noise filter TB23 and INV board SC-L3 is put through CT3.
(4) Blown fuse	Check for a blown fuse (F01) on the control board. ->If a blown fuse is found, check for a short-circuiting or earth fault of the actuator.
(5) CT3 failure	Replace the inverter if this problem is detected after the compressor has gone into operation.
(6) Control board failure	Replace the control board if none of the above is causing the problem.

1. Error Code

4106

<Transmission power supply fault Error detail code FF (Outdoor unit)>

2. Error definition and error detection method

Transmission power output failure

3. Cause

1) Wiring failure
2) Transmission power supply cannot output voltage because overcurrent was detected.
3) Voltage cannot be output due to transmission power supply problem.
4) Transmission voltage detection circuit failure

4. Check method and remedy

Check the items in VIII [4] -3- (2) Troubleshooting transmission power circuit of outdoor unit on all outdoor units in the same refrigerant circuit.(page 163)

<Transmission power supply fault other than error detail code FF (Outdoor unit)>

2. Error definition and error detection method

Transmission power reception failure

3. Cause

One of the outdoor units stopped supplying power, but no other outdoor units start supplying power.

4. Check method and remedy

Check the items in VIII [4] -3- (2) Troubleshooting transmission power circuit of outdoor unit on all outdoor units in the same refrigerant circuit.(page 163)

---

1. Error Code

4114

Indoor unit fan motor error

2. Error definition and error detection method

When the fan motor output from the indoor unit circuit board is ON and when the rotation speed input from the fan motor cannot be detected for 30 seconds or more

3. Cause, check method and remedy

Cause	Check method and remedy
(1) Fan motor connector contact failure	Check the fan motor connector CNMF for proper connection.
(2) Indoor unit circuit board failure	Remove the fan motor connector CNMF and check the voltage at the indoor unit circuit board. Testing point 1. 280 VDC (Between CNMF1 (+) and CNMF4 (-)) 2. 15 VDC (Between CNMF5 (+) and CNMF4 (-)) Replace the indoor unit circuit board if the voltage is abnormal. If the 4114 error persists after the indoor unit circuit board is replaced, replace the fan motor as well.
(3) Fan motor fault	Replace the fan motor if the voltage is normal in step (2) above. If the 4114 error persists after the fan motor is replaced, replace the indoor unit circuit board as well.

1. Error Code

4115

Power supply signal sync error

2. Error definition and error detection method

The frequency cannot be determined when the power is switched on.

3. Cause, check method and remedy

Cause	Check method and remedy
(1) Power supply error	Check the voltage of the power supply terminal block (TB1).
(2) Noise filter problem •Coil problem •Circuit board failure	•Check the coil connections. •Check for coil burnout. •Confirm that the voltage at the CN3 connector is 198 V or above.
(3) Faulty wiring	Check fuse F01 on the control board.
(4) Wiring failure Between noise filter CN3 and noise filter CN2 and control board CNAC	Confirm that the voltage at the control board connector CNAC is 198 V or above.
(5) Control board failure	If none of the items described above is applicable, and if the trouble reappears even after the power is switched on again, replace the control board.

1. Error Code

5111 - 5116

Temperature sensor fault (HBC controller) (TH11~TH16)

5132 - 5135

Temperature sensor fault (HBC controller) (TH32~TH35)

5141 - 5156

Temperature sensor fault (HBC controller) (TH31a~TH31p)

5161 - 5176

Temperature sensor fault (Sub-HBC controller) (TH41a~TH41p)

5177 - 5178

Temperature sensor fault (Sub-HBC controller) (TH42~TH43)

2. Error definition and error detection method

- If a shorted (high temperature intake) or open (low temperature intake) thermistor (TH11 through TH16, TH32 through TH35, TH31a through TH31p, TH41a through TH41p, TH42, or TH43) is detected during operation, the unit comes to an abnormal stop, and an error code “5111” through “5116,” “5132” through “5135,” “5141” through “5156,” “5161” through “5176,” or “5177” through “5178” appears on the display.
- Detection of a short- or open-circuit as described above is suspended during the defrost cycle and for 3 minutes after the operation mode is changed.

3. Cause, check method and remedy

Cause	Check method and remedy
(1) Thermistor failure	Check thermistor resistance.
(2) Pinched lead wire	Check for pinched lead wire.
(3) Torn wire coating	Check for wire coating.
(4) A pin on the male connector is missing or contact failure	Check connector.
(5) Disconnected wire	Check for wire.
(6) Thermistor input circuit failure on the control board	Check the intake temperature of the sensor with the LED monitor. When the temperature is far different from the actual temperature, replace the control board.

<Reference>

	Short detection	Open detection
TH11	110°C [230°F] and above (0.4kΩ)	-40°C [-40°F] and below (130kΩ)
TH12	110°C [230°F] and above (0.4kΩ)	-40°C [-40°F] and below (130kΩ)
TH13	110°C [230°F] and above (0.4kΩ)	-40°C [-40°F] and below (130kΩ)
TH14	110°C [230°F] and above (0.4kΩ)	-40°C [-40°F] and below (130kΩ)
TH15	110°C [230°F] and above (0.4kΩ)	-40°C [-40°F] and below (130kΩ)
TH16	110°C [230°F] and above (0.4kΩ)	-40°C [-40°F] and below (130kΩ)
TH32~TH35	110°C [230°F] and above (0.4kΩ)	-40°C [-40°F] and below (130kΩ)
TH31a~TH31p	110°C [230°F] and above (0.4kΩ)	-40°C [-40°F] and below (130kΩ)
TH41a~TH41p	110°C [230°F] and above (0.4kΩ)	-40°C [-40°F] and below (130kΩ)
TH42~TH43	110°C [230°F] and above (0.4kΩ)	-40°C [-40°F] and below (130kΩ)

1. Error Code

5201

High-pressure sensor fault (Outdoor unit 63HS1/HBC controller PS)

2. Error definition and error detection method

When a pressure sensor reading of 4.06 MPa [589 psi] or above is detected, error codes "5201" and "5203" will appear. The unit will continue its operation by using other sensors as a backup.

3. Cause, check method and remedy

Cause	Check method and remedy
(1) High pressure sensor failure	Refer to the page on the troubleshooting of the high pressure sensor in outdoor unit service handbook.
(2) Pressure drop due to refrigerant leak	
(3) Torn wire coating	
(4) A pin on the male connector is missing or contact failure	
(5) Disconnected wire	
(6) High pressure sensor input circuit failure on the control board	

1. Error Code

5301

ACCT sensor fault (Detail code 115)

2. Error definition and error detection method

When the formula "output current < 1.5 Arms" remains satisfied for 10 seconds while the inverter is in operation.

3. Cause, check method and remedy

Cause	Check method and remedy
(1) Inverter open output phase	Check the output wiring connections.
(2) Compressor failure	Refer to the page on troubleshooting of inverter in outdoor unit service handbook
(3) INV board failure	Refer to the page on troubleshooting of inverter in outdoor unit service handbook

Note

Refer to the page on troubleshooting of inverter in outdoor unit service handbook.

1. Error Code

5301

ACCT sensor circuit fault (Detail code 117)

2. Error definition and error detection method

When an error value is detected with the ACCT detection circuit just before the inverter starts

3. Cause, check method and remedy

Cause	Check method and remedy
(1) INV board failure	Refer to the page on troubleshooting of inverter in outdoor unit service handbook
(2) Compressor failure	Refer to the page on troubleshooting of inverter in outdoor unit service handbook

Note

Refer to the page on troubleshooting of inverter in outdoor unit service handbook.

1. Error Code

5301

Open-circuited IPM/Loose ACCT connector (Detail code 119)

2. Error definition and error detection method

Presence of enough current cannot be detected during the self-diagnostic operation immediately before inverter startup.

3. Cause, check method and remedy

Cause	Check method and remedy
(1) Inverter output wiring problem	Check output wiring connections. Confirm that the U- and W-phase output cables are put through CT12 and CT22 on the INV board respectively.
(2) Inverter failure	Refer to the page on troubleshooting of inverter in outdoor unit service handbook
(3) Compressor failure	Refer to the page on troubleshooting of inverter in outdoor unit service handbook

Note

Refer to the page on troubleshooting of inverter in outdoor unit service handbook.

1. Error Code

5301

Faulty ACCT wiring (Detail code 120)

2. Error definition and error detection method

Presence of target current cannot be detected during the self-diagnostic operation immediately before startup. (Detection of improperly mounted ACCT sensor)

3. Cause, check method and remedy

Cause	Check method and remedy
(1) Inverter output wiring problem	Check output wiring connections. Confirm that the U- and W-phase output cables are put through CT12 and CT22 on the INV board respectively.
(2) Inverter failure	Refer to the page on troubleshooting of inverter in outdoor unit service handbook
(3) Compressor failure	Refer to the page on troubleshooting of inverter in outdoor unit service handbook

Note

Refer to the page on troubleshooting of inverter in outdoor unit service handbook.

1. Error Code

5701

Loose float switch connector

2. Error definition and error detection method

Detection of the disconnected float switch (open-phase condition) during operation

3. Cause, check method and remedy

(1) CN4F disconnection or contact failure

Check for disconnection of the connector (CN4F) on the indoor unit control board.

1. Error Code

6600

Address overlaps

2. Error definition and error detection method

An error in which signals from more than one indoor units with the same address are received

Note

The address and attribute that appear on the remote controller indicate the controller that detected the error.

3. Cause, check method and remedy

Cause	Check method and remedy
(1) Two or more of the following have the same address: Outdoor units, HBC controllers, indoor units, LOSSNAY units, controllers such as ME remote controllers. <Example> 6600 "01" appears on the remote controller Unit #01 detected the error. Two or more units in the system have 01 as their address. (2) Signals are distorted by the noise on the transmission line.	♦Find the unit that has the same address as that of the error source. **Once the unit is found, correct the address. Then, turn off the outdoor units, indoor units, and LOSSNAY units, keep them all turned off for at least five minutes, and turn them back on.** ♦When air conditioning units are operating normally despite the address overlap error Check the transmission wave shape and noise on the transmission line. See the section "Investigation of Transmission Wave Shape/Noise."

1. Error Code

6601

Polarity setting error

2. Error definition and error detection method

The error detected when transmission processor cannot distinguish the polarities of the M-NET transmission line.

3. Cause, check method and remedy

Cause	Check method and remedy
(1) No voltage is applied to the M-NET transmission line that AG-150A/GB-50ADA/PAC-YG50ECA/BAC-HD150 are connected to. (2) M-NET transmission line to which AG-150A/GB-50ADA/PAC-YG50ECA/BAC-HD150 are connected is short-circuited.	Check if power is supplied to the M-NET transmission line of the AG-150A/GB-50ADA/PAC-YG50ECA/BAC-HD150, and correct any problem found.

1. Error Code

6602

Transmission processor hardware error

2. Error definition and error detection method

Although "0" was surely transmitted by the transmission processor, "1" is displayed on the transmission line.

Note

The address/attribute appeared on the display on the remote controller indicates the controller where an error occurred.

3. Cause

1) When the wiring work of or the polarity of either the indoor or outdoor transmission line is performed or is changed while the power is on, the transmitted data will collide, the wave shape will be changed, and an error will be detected.
2) Grounding fault of the transmission line
3) When grouping the indoor units that are connected to different outdoor units, the male power supply connectors on the multiple outdoor units are connected to the female power supply switch connector (CN40).
4) When the power supply unit for transmission lines is used in the system connected with MELANS, the male power supply connector is connected to the female power supply switch connector (CN40) on the outdoor unit.
5) Controller failure of the source of the error
6) When the transmission data is changed due to the noise on the transmission line
7) Voltage is not applied on the transmission line for centralized control (in case of grouped indoor units connected to different outdoor units or in case of the system connected with MELANS)

4. Check method and remedy

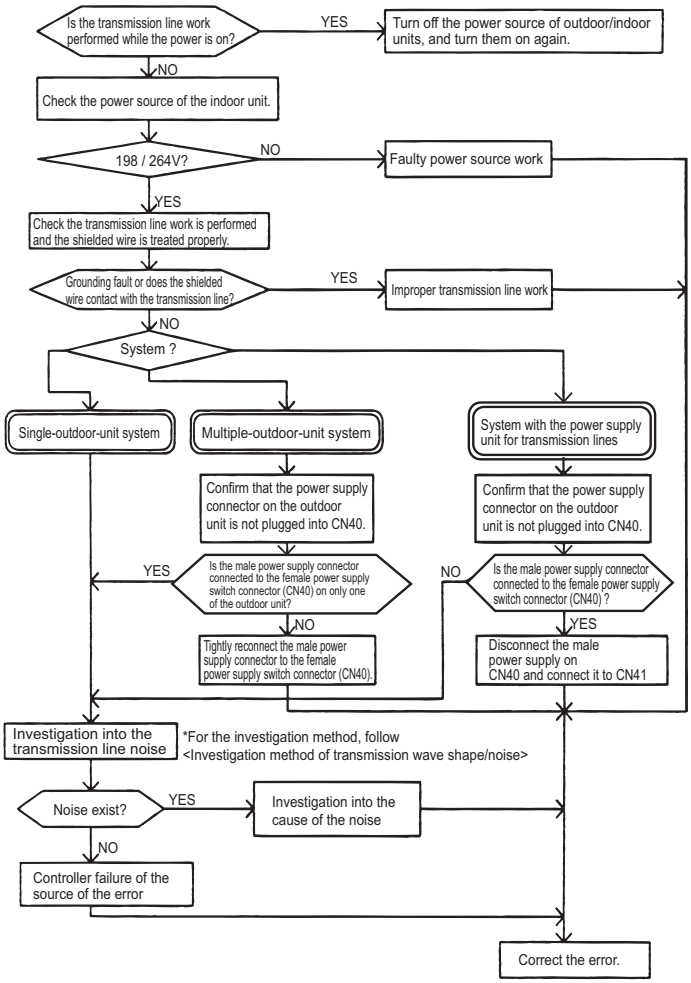

1. Error Code

6603

Transmission line bus busy error

2. Error definition and error detection method

- Generated error when the command cannot be transmitted for 4-10 minutes in a row due to bus-busy
- Generated error when the command cannot be transmitted to the transmission line for 4-10 minutes in a row due to noise

Note

The address/attribute appeared on the display on the remote controller indicates the controller where an error occurred.

3. Cause, check method and remedy

Cause	Check method and remedy
(1) The transmission processor cannot be transmitted as the short-wavelength voltage like noise exists consecutively on the transmission line.	Check the transmission wave shape and noise on the transmission line. See the section "Investigation of Transmission Wave Shape/Noise." -> No noise indicates that the error source controller is a failure. -> If noise exists, investigate the noise.
(2) Error source controller failure	

1. Error Code

6606

Communication error between device and transmission processors

2. Error definition and error detection method

Communication error between the main microcomputer on the indoor unit board and the microcomputer for transmission

Note

The address/attribute appeared on the display on the remote controller indicates the controller where an error occurred.

3. Cause, check method and remedy

Cause	Check method and remedy
(1) Data is not properly transmitted due to accidental erroneous operation of the controller of the error source.	Turn off the power source of the outdoor and the indoor units.(When the power source is turned off separately, the microcomputer will not be reset, and the error will not be corrected.) -> If the same error occurs, the error source controller is a failure.
(2) Error source controller failure	

1. Error Code

6607

No ACK error

2. Error definition and error detection method

The error is detected when no acknowledgement (ACK signal) is received after the transmission. (eg. When the data is transmitted six times in a row with 30 seconds interval, the error is detected on the transmission side.)

Note

The address/attribute appeared on the display on the remote controller indicates the controller which did not provide the response (ACK).

3. System configuration

(1) System with one outdoor unit

Error source address	Error display	Detection method	Cause	Check method and remedy
Outdoor unit (OC)	ME remote controller (RC) MA remote controller (MA)	No acknowledgement (ACK) at IC transmission to OC	(1) Contact failure of transmission line of OC or IC (2) Decrease of transmission line voltage/signal by exceeding acceptable range of transmission wiring. Farthest:200 m [656ft] or less Remote controller wiring: 10m [32ft] or less (3) Erroneous sizing of transmission line (Not within the range below). Wire diameter: 1.25mm^2 [AWG16] or more (4) Indoor unit control board failure	Turn off the power source of the outdoor unit, and turn it on again. If the error is accidental, it will run normally. If not, check the causes (1) - (4).
HBC controller (HB)	ME remote controller (RC) MA remote controller (MA)	No acknowledgement (ACK) at IC transmission to HB	(1) When HBC controller address is changed or modified during operation. (2) Faulty or disconnected transmission wiring of HBC controller (3) Disconnected connector of HBC controller (CN02) (4) Faulty control board of HBC controller	Turn off the outdoor/indoor units for 5 or more minutes, and turn them on again. If the error is accidental, they will run normally. If not, check the causes (1) - (4).
Indoor unit (IC)	ME remote controller (RC) MA remote controller (MA)	No acknowledgement (ACK) at RC transmission to IC	(1) When IC unit address is changed or modified during operation. (2) Faulty or disconnected IC transmission wiring (3) Disconnected IC connector (CN2M) (4) Indoor unit controller failure (5) ME remote controller failure	Turn off the outdoor/indoor units for 5 or more minutes, and turn them on again. If the error is accidental, they will run normally. If not, check the causes (1) - (5).
LOSSNAY (LC)	ME remote controller (RC) MA remote controller (MA)	No acknowledgement (ACK) at IC transmission to LC	(1) The power source of LOSSNAY has been shut off. (2) When the address of LOSSNAY is changed in the middle of the operation (3) Faulty or disconnected transmission wiring of LOSSNAY (4) Disconnected connector (CN1) on LOSSNAY (5) Controller failure of LOSSNAY	Turn off the power source of LOSSNAY and turn it on again. If the error is accidental, it will run normally. If not, check the causes (1) - (5).
ME remote controller (RC)	ME remote controller (RC) MA remote controller (MA)	No acknowledgement (ACK) at IC transmission to RC	(1) Faulty transmission wiring at IC unit side. (2) Faulty wiring of the transmission line for ME remote controller (3) When the address of ME remote controller is changed in the middle of the operation (4) ME remote controller failure	Turn off the power source of the outdoor unit for 5 minutes or more, and turn it on again. If the error is accidental, it will run normally. If not, check the causes (1) - (4).

1. Error Code

6607

No ACK error

2. Error definition and error detection method

The error is detected when no acknowledgement (ACK signal) is received after the transmission. (eg. When the data is transmitted six times in a row with 30 seconds interval, the error is detected on the transmission side.)

Note

The address/attribute appeared on the display on the remote controller indicates the controller which did not provide the response (ACK).

3. System configuration

(2) Grouping of units in a system with multiple outdoor units

Error source address	Error display	Detection method	Cause	Check method and remedy
Outdoor unit (OC)	ME remote controller (RC) MA remote controller (MA)	No acknowledgement (ACK) at IC transmission to OC	Same cause as that for system with one outdoor unit	Same remedy as that for system with one outdoor unit
HBC controller (HB)	ME remote controller (RC) MA remote controller (MA)	No acknowledgement (ACK) at IC transmission to HB	Same cause as that for system with one outdoor unit	Same remedy as that for system with one outdoor unit
Indoor unit (IC)	ME remote controller (RC) MA remote controller (MA)	No acknowledgement (ACK) at RC transmission to IC	(1) Same causes as (1) - (5) for system with one outdoor unit (2) Disconnection or short circuit of the transmission line for the outdoor unit on the terminal block for centralized control line connection (TB7) (3) When multiple outdoor units are connected and the power source of one of the outdoor units has been shut off. (4) The male power supply connector of the outdoor unit is not connected to the female power supply switch connector (CN40). (5) The male power supply connectors on 2 or more outdoor units are connected to the female power supply switch connector (CN40) for centralized control. If an error occurs, after the unit runs normally once, the following causes may be considered. •Total capacity error (7100) •Capacity code error (7101) •Error in the number of connected units (7102) •Address setting error (7105)	1) Turn off the power sources of the outdoor and indoor units for 5 or more minutes, and turn them on again. If the error is accidental, the will run normally.If not, check the cause 2). 2) Check the causes of (1) - (5). If the cause is found, correct it. If no cause is found, check 3). 3) Check the LED displays for troubleshooting on other remote controllers whether an error occurs. If an error is found, -> If an error is found, check the check code definition, and correct the error. If no error is found, -> Indoor unit board failure

1. Error Code

6607

No ACK error

2. Error definition and error detection method

The error is detected when no acknowledgement (ACK signal) is received after the transmission. (eg. When the data is transmitted six times in a row with 30 seconds interval, the error is detected on the transmission side.)

Note

The address/attribute appeared on the display on the remote controller indicates the controller which did not provide the response (ACK).

3. System configuration

(2) Grouping of units in a system with multiple outdoor units

Error source address	Error display	Detection method	Cause	Check method and remedy
LOSSNAY (LC)	ME remote controller (RC) MA remote controller (MA)	No acknowledgement (ACK) at IC transmission to LC	(1) Factors (1) through (5) in the "Factors in system with one outdoor unit" (When performing an interlocked operation of the LOSSNAY unit and the indoor units that are connected to different outdoor units.) (2) Disconnection or short circuit of the transmission line for the outdoor unit on the terminal block for centralized control line connection (TB7) (3) When multiple outdoor units are connected and the power source of one of the outdoor units has been shut off. (4) The male power supply connector of the outdoor unit is not connected to the female power supply switch connector (CN40). (5) The male power supply connectors on 2 or more outdoor units are connected to the female power supply switch connector (CN40) for centralized control. If an error occurs, after the unit runs normally once, the following causes may be considered. •Total capacity error (7100) •Capacity code error (7101) •Error in the number of connected units (7102) •Address setting error (7105)	1) Turn off the power source of LOSSNAY for 5 or more minutes, and turn it on again. If the error is accidental, it will run normally.If not, check the cause 2). 2) Check the causes of (1) - (5). If the cause is found, correct it. If no cause is found, check 3). 3) Same cause as that for indoor unit described in 3)

1. Error Code

6607

No ACK error

2. Error definition and error detection method

The error is detected when no acknowledgement (ACK signal) is received after the transmission. (eg. When the data is transmitted six times in a row with 30 seconds interval, the error is detected on the transmission side.)

Note

The address/attribute appeared on the display on the remote controller indicates the controller which did not provide the response (ACK).

3. System configuration

(2) Grouping of units in a system with multiple outdoor units

Error source address	Error display	Detection method	Cause	Check method and remedy
ME remote controller (RC)	ME remote controller (RC) MA remote controller (MA)	No acknowledgement (ACK) at IC transmission to RC	(1) Same causes as (1) - (4) for system with one outdoor unit (2) Disconnection or short circuit of the transmission line for the outdoor unit on the terminal block for centralized control line connection (TB7) (3) When multiple outdoor units are connected and the power source of one of the outdoor units has been shut off. (4) The male power supply connector of the outdoor unit is not connected to the female power supply switch connector (CN40). (5) The male power supply connectors on 2 or more outdoor units are connected to the female power supply switch connector (CN40) for centralized control. If the problem recurs after normal operation is restored, the problem is caused by one of the following factors: •Total capacity error (7100) •Capacity code setting error (7101) •Error in the number of connected units (7102) •Address setting error (7105)	1) Turn off the power source of LOSSNAY for 5 or more minutes, and turn it on again. If the error is accidental, it will run normally.If not, check the cause 2). 2) Check the causes of (1) - (5). If the cause is found, correct it. If no cause is found, check 3). 3) Same cause as that for indoor unit described in 3)

1. Error Code

6607

No ACK error

2. Error definition and error detection method

The error is detected when no acknowledgement (ACK signal) is received after the transmission. (eg. When the data is transmitted six times in a row with 30 seconds interval, the error is detected on the transmission side.)

Note

The address/attribute appeared on the display on the remote controller indicates the controller which did not provide the response (ACK).

3. System configuration

(3) System connected to the system controllers (MELANS)

Error source address	Error display	Detection method	Cause	Check method and remedy
Outdoor unit (OC)	ME remote controller (RC) System controller (SC) MA remote controller (MA)	No acknowledgement (ACK) at IC transmission to OC	Same cause as that for system with one outdoor unit	Same remedy as that for system with one outdoor unit
HBC controller (HB)	ME remote controller (RC) system controller (SC) MA remote controller (MA)	No acknowledgement (ACK) at IC transmission to HB	Same cause as that for system with one outdoor unit	Same remedy as that for system with one outdoor unit

1. Error Code

6607

No ACK error

2. Error definition and error detection method

The error is detected when no acknowledgement (ACK signal) is received after the transmission. (eg. When the data is transmitted six times in a row with 30 seconds interval, the error is detected on the transmission side.)

Note

The address/attribute appeared on the display on the remote controller indicates the controller which did not provide the response (ACK).

3. System configuration

(3) System connected to the system controllers (MELANS)

Error source address	Error display	Detection method	Cause	Check method and remedy
Indoor unit (IC)	ME remote controller (RC) MA remote controller (MA)	No acknowledgement (ACK) at RC transmission to IC	Same as grouping of units in a system with multiple outdoor units	Same remedy as that for grouping of units in a system with multiple outdoor units
	System controller (SC)	No acknowledgement (ACK) at SC transmission to IC	1. Error occurrence on some IC (1) Same cause as that for system with one outdoor unit	Same remedy as that for system with one outdoor unit
			2. Error occurrence on all IC in the system with one outdoor unit (1) Total capacity error (7100) (2) Capacity code error (7101) (3) Error in the number of connected units (7102) (4) Address setting error (7105) (5) Disconnection or short circuit of the transmission line for the outdoor unit on the terminal block for centralized control line connection (TB7) (6) Turn off the power source of the outdoor unit (7) Malfunction of electrical system for the outdoor unit	1) Check the LED display for troubleshooting on the outdoor unit. •If an error is found, check the check code definition, and correct the error. •If no error is found, check 2). 2) Check (5) - (7) on the left.
			3. Error occurrence on all IC (1) Same causes as (1) - (7) described in 2. (2) The male power supply connectors on 2 or more outdoor units are connected to the female power supply switch connector (CN40) for the transmission line for centralized control. (3) Disconnection or shutdown of the power source of the power supply unit for transmission line (4) System controller (MELANS) malfunction	Check voltage of the transmission line for centralized control. •20V or more: Check (1) and (2) on the left. •Less than 20V: Check (3) on the left.

1. Error Code

6607

No ACK error

2. Error definition and error detection method

The error is detected when no acknowledgement (ACK signal) is received after the transmission. (eg. When the data is transmitted six times in a row with 30 seconds interval, the error is detected on the transmission side.)

Note

The address/attribute appeared on the display on the remote controller indicates the controller which did not provide the response (ACK).

3. System configuration

(3) System connected to the system controllers (MELANS)

Error source address	Error display	Detection method	Cause	Check method and remedy
ME remote controller (RC)	ME remote controller (RC) System controller (SC) MA remote controller (MA)	No acknowledgement (ACK) at IC transmission to RC	Same as grouping of units in a system with multiple outdoor units	Same remedy as that for grouping of units in a system with multiple outdoor units
	System controller (SC)	No acknowledgement (ACK) at MELANS transmission to RC	1. Error occurrence on some IC (1) Same cause as that for system with one outdoor unit	Same remedy as that for system with one outdoor unit
			2. Error occurrence on all IC in the system with one outdoor unit (1) An error is found by the outdoor unit. Total capacity error (7100) Capacity code error (7101) Error in the number of connected units (7102) Address setting error (7105) (2) Disconnection or short circuit of the transmission line for the outdoor unit on the terminal block for centralized control line connection (TB7) (3) Turn off the power source of the outdoor unit (4) Malfunction of electrical system for the outdoor unit	1) Check the LED display for troubleshooting on the outdoor unit. • If an error is found, check the check code definition, and correct the error. • If no error is found, check the cause 2). 2) Check (2) - (4) on the left.
			3. Error occurrence on all IC (1) Same causes as (1) - (4) described in 2. (2) When the power supply unit for transmission lines is used and the male power supply connector is connected to the female power supply switch connector (CN40) for the transmission line for centralized control (3) Disconnection or shutdown of the power source of the power supply unit for transmission line (4) System controller (MELANS) malfunction	Check (1) - (4) on the left.

1. Error Code

6607

No ACK error

2. Error definition and error detection method

The error is detected when no acknowledgement (ACK signal) is received after the transmission. (eg. When the data is transmitted six times in a row with 30 seconds interval, the error is detected on the transmission side.)

Note

The address/attribute appeared on the display on the remote controller indicates the controller which did not provide the response (ACK).

3. System configuration

(3) System connected to the system controllers (MELANS)

Error source address	Error display	Detection method	Cause	Check method and remedy
System controller (SC)	ME remote controller (RC) MA remote controller (MA)	No acknowledgement (ACK) at IC transmission to SC	1. Error display on some displays on ME remote controllers (1) Faulty wiring of the transmission line for ME remote controller (2) Disconnection or contact failure of the transmission connector for ME remote controller (3) ME remote controller failure	Check (1) - (3) on the left.
			2. Error occurrence on all IC in the system with one outdoor unit (1) An error is found by the outdoor unit. Total capacity error (7100) Capacity code error (7101) Error in the number of connected units (7102) Address setting error (7105) (2) Disconnection or short circuit of the transmission line for the outdoor unit on the terminal block for centralized control line connection (TB7) (3) Turn off the power source of the outdoor unit (4) Malfunction of electrical system for the outdoor unit	1) Check the LED display for troubleshooting on the outdoor unit. • If an error is found, check the check code definition, and correct the error. • If no error is found, check the cause 2) 2) Check (2) - (4) on the left.
			3. Error display on all displays on ME remote controllers (1) Same causes as (1) - (4) described in 2. (2) When the power supply unit for transmission lines is used and the male power supply connector is connected to the female power supply switch connector (CN40) for the transmission line for centralized control (3) Disconnection or shutdown of the power source of the power supply unit for transmission line (4) System controller (MELANS) malfunction	Check (1) - (4) on the left

1. Error Code

6607

No ACK error

2. Error definition and error detection method

The error is detected when no acknowledgement (ACK signal) is received after the transmission. (eg. When the data is transmitted six times in a row with 30 seconds interval, the error is detected on the transmission side.)

Note

The address/attribute appeared on the display on the remote controller indicates the controller which did not provide the response (ACK).

3. System configuration

(4) Errors that are not limited to a particular system

Error source address	Error display	Detection method	Cause	Check method and remedy
Address which should not be existed	-	-	(1) Although the address of ME remote controller has been changed after the group is set using ME remote controller, the indoor unit is keeping the memory of the previous address. The same symptom will appear for the registration with SC. (2) Although the address of LOSSNAY has been changed after the interlock registration of LOSSNAY is made using ME remote controller, the indoor unit is keeping the memory of the previous address.	Delete unnecessary information of non-existing address which some indoor units have. Use either of the following two methods for deletion. 1) Address deletion by ME remote controller Delete unnecessary address information using the manual setting function of ME remote controller. 2) Deletion of connection information of the outdoor unit by the deleting switch **Note that the above method will delete all the group settings set via the ME remote controller and all the interlock settings between LOSSNAY units and indoor units.** • Turn off the power source of the outdoor unit, and wait for 5 minutes. • Turn on the dip switch (SW5-2) on the outdoor unit control board. • Turn on the power source of the outdoor unit, and wait for 5 minutes. • Turn off the power source of the outdoor unit, and wait for 5 minutes. • Turn off the dip switch (SW5-2) on the outdoor unit control board. • Turn on the power source of the outdoor unit.

1. Error Code

6608

No response error

2. Error definition and error detection method

- When no response command is returned although acknowledgement (ACK) is received after transmission, an error is detected.
- When the data is transmitted 10 times in a row with 3 seconds interval, an error is detected on the transmission side.

Note

The address/attribute appeared on the display on the remote controller indicates the controller where an error occurred.

3. Cause

1) The transmission line work is performed while the power is on, the transmitted data will collide, and the wave shape will be changed.
2) The transmission is sent and received repeatedly due to noise.
3) Decrease of transmission line voltage/signal by exceeding acceptable range of transmission wiring.
   Farthest:200m [656ft] or less
   Remote controller wiring:12m [39ft] or less
4) The transmission line voltage/signal is decreased due to erroneous sizing of transmission line.
   Wire diameter: 1.25mm^2[AWG16] or more

4. Check method and remedy

1) When an error occurs during commissioning, turn off the power sources for the outdoor unit, indoor unit, BC controller, and LOSSNAY for 5 or more minutes, and then turn them on again.
   - When they return to normal operation, the cause of the error is the transmission line work performed with the power on.
   - If an error occurs again, check the cause 2).
2) Check 3) and 4) above.
   - If the cause is found, correct it.
   - If no cause is found, check 3).
3) Check transmission wave shape/ noise on trans-mission line by following "VIII [3] Investigation of Transmission Wave Shape/ Noise" (page 151).
   Noise is the most possible cause of the error "6608".

1. Error Code

7100

Total capacity error

2. Error definition and error detection method

The model total of indoor units in the system with one outdoor unit exceeds limitations.

3. Error source, cause, check method and remedy,

<table>
<tr><th>Error source</th><th>Cause</th><th>Check method and remedy</th></tr>
<tr><td rowspan="3">Outdoor unit</td><td>(1) The model total of indoor units in the system with one outdoor unit exceeds the following table.
<table>
<tr><th>Model</th><th>Qj Total</th></tr>
<tr><td>(E)P200 model</td><td>300</td></tr>
<tr><td>(E)P250 model</td><td>375</td></tr>
<tr><td>(E)P300 model</td><td>450</td></tr>
<tr><td>(E)P350 model</td><td>525</td></tr>
<tr><td>(E)P400 model</td><td>600</td></tr>
<tr><td>(E)P450 model</td><td>675</td></tr>
<tr><td>(E)P500 model</td><td>750</td></tr>
</table></td><td>1) Check the Qj total (capacity code total) of indoor units connected.

2) Check the Qj setting (capacity code) of the connected indoor unit set by the switch (SW2 on indoor unit board).

When the model name set by the switch is different from that of the unit connected, turn off the power source of the outdoor and the indoor units, and change the setting of the Qj (capacity code).

3) Indoor unit Qj table
<table>
<tr><th>Model</th><th>Qj</th></tr>
<tr><td>15</td><td>3</td></tr>
<tr><td>20</td><td>4</td></tr>
<tr><td>25</td><td>5</td></tr>
<tr><td>32</td><td>6</td></tr>
<tr><td>40</td><td>8</td></tr>
<tr><td>50</td><td>10</td></tr>
</table></td></tr>
<tr><td>(2) The model selection switches (SW5-3 - 5-8) on the outdoor unit are set incorrectly.
<table>
<tr><th rowspan="2">Model</th><th colspan="6">SW5</th></tr>
<tr><th>3</th><th>4</th><th>5</th><th>6</th><th>7</th><th>8</th></tr>
<tr><td>P200 model</td><td>OFF</td><td>ON</td><td>OFF</td><td>OFF</td><td>ON</td><td>OFF</td></tr>
<tr><td>P250 model</td><td>ON</td><td>ON</td><td>OFF</td><td>OFF</td><td>ON</td><td>OFF</td></tr>
<tr><td>P300 model</td><td>OFF</td><td>OFF</td><td>ON</td><td>OFF</td><td>ON</td><td>OFF</td></tr>
<tr><td>P350 model</td><td>OFF</td><td>ON</td><td>ON</td><td>OFF</td><td>ON</td><td>OFF</td></tr>
<tr><td>P400 model</td><td>ON</td><td>ON</td><td>ON</td><td>OFF</td><td>ON</td><td>OFF</td></tr>
<tr><td>P450 model</td><td>OFF</td><td>OFF</td><td>OFF</td><td>ON</td><td>ON</td><td>OFF</td></tr>
<tr><td>P500 model</td><td>ON</td><td>OFF</td><td>OFF</td><td>ON</td><td>ON</td><td>OFF</td></tr>
<tr><td>EP200 model</td><td>OFF</td><td>ON</td><td>OFF</td><td>OFF</td><td>ON</td><td>ON</td></tr>
<tr><td>EP250 model</td><td>ON</td><td>ON</td><td>OFF</td><td>OFF</td><td>ON</td><td>ON</td></tr>
<tr><td>EP300 model</td><td>OFF</td><td>OFF</td><td>OFF</td><td>OFF</td><td>ON</td><td>ON</td></tr>
<tr><td>EP350 model</td><td>OFF</td><td>ON</td><td>ON</td><td>OFF</td><td>ON</td><td>ON</td></tr>
<tr><td>EP400 model</td><td>ON</td><td>ON</td><td>ON</td><td>OFF</td><td>ON</td><td>ON</td></tr>
<tr><td>EP450 model</td><td>OFF</td><td>OFF</td><td>OFF</td><td>ON</td><td>ON</td><td>ON</td></tr>
<tr><td>EP500 model</td><td>ON</td><td>OFF</td><td>OFF</td><td>ON</td><td>ON</td><td>ON</td></tr>
</table></td><td>Check the setting for the model selection switch on the outdoor unit (Dipswitches SW5-3 - 5-8 on the outdoor unit control board).</td></tr>
<tr><td>(3) The outdoor unit and the auxiliary unit (OS) that is connected to the same system are not properly connected.</td><td>Confirm that the TB3 on the OC and OS are properly connected.</td></tr>
</table>

1. Error Code

7101

Capacity code setting error

2. Error definition and error detection method

Connection of incompatible (wrong capacity code) indoor unit or outdoor unit

3. Error source, cause, check method and remedy

<table>
<tr><th>Error source</th><th>Cause</th><th>Check method and remedy</th></tr>
<tr><td>Outdoor unit
Indoor unit</td><td>(1) The model name (capacity code) set by the switch (SW2) is wrong.

*The capacity of the indoor unit can be confirmed by the self-diagnosis function (SW4 operation) of the outdoor unit.</td><td>1) Check the model name (capacity code) of the indoor unit which has the error source address set by the switch (SW2 on indoor unit board).
When the model name set by the switch is different from that of the unit connected, turn off the power source of the outdoor and the indoor units, and change the setting of the capacity code.</td></tr>
<tr><td>Outdoor unit</td><td>(2) The model selection switches (SW5-3 - 5-8) on the outdoor unit are set incorrectly.

<table>
<tr><th rowspan="2">Model</th><th colspan="6">SW5</th></tr>
<tr><th>3</th><th>4</th><th>5</th><th>6</th><th>7</th><th>8</th></tr>
<tr><td>P200 model</td><td>OFF</td><td>ON</td><td>OFF</td><td>OFF</td><td>ON</td><td>OFF</td></tr>
<tr><td>P250 model</td><td>ON</td><td>ON</td><td>OFF</td><td>OFF</td><td>ON</td><td>OFF</td></tr>
<tr><td>P300 model</td><td>OFF</td><td>OFF</td><td>ON</td><td>OFF</td><td>ON</td><td>OFF</td></tr>
<tr><td>P350 model</td><td>OFF</td><td>ON</td><td>ON</td><td>OFF</td><td>ON</td><td>OFF</td></tr>
<tr><td>P400 model</td><td>ON</td><td>ON</td><td>ON</td><td>OFF</td><td>ON</td><td>OFF</td></tr>
<tr><td>P450 model</td><td>OFF</td><td>OFF</td><td>OFF</td><td>ON</td><td>ON</td><td>OFF</td></tr>
<tr><td>P500 model</td><td>ON</td><td>OFF</td><td>OFF</td><td>ON</td><td>ON</td><td>OFF</td></tr>
<tr><td>EP200 model</td><td>OFF</td><td>ON</td><td>OFF</td><td>OFF</td><td>ON</td><td>ON</td></tr>
<tr><td>EP250 model</td><td>ON</td><td>ON</td><td>OFF</td><td>OFF</td><td>ON</td><td>ON</td></tr>
<tr><td>EP300 model</td><td>OFF</td><td>OFF</td><td>OFF</td><td>OFF</td><td>ON</td><td>ON</td></tr>
<tr><td>EP350 model</td><td>OFF</td><td>ON</td><td>ON</td><td>OFF</td><td>ON</td><td>ON</td></tr>
<tr><td>EP400 model</td><td>ON</td><td>ON</td><td>ON</td><td>OFF</td><td>ON</td><td>ON</td></tr>
<tr><td>EP450 model</td><td>OFF</td><td>OFF</td><td>OFF</td><td>ON</td><td>ON</td><td>ON</td></tr>
<tr><td>EP500 model</td><td>ON</td><td>OFF</td><td>OFF</td><td>ON</td><td>ON</td><td>ON</td></tr>
</table></td><td>Check the setting for the model selection switch on the outdoor unit (Dipswitches SW5-3 - 5-8 on the outdoor unit control board).</td></tr>
</table>

1. Error Code

7102

Wrong number of connected units

2. Error definition and error detection method

The number of connected indoor units is "0" or exceeds the allowable value.

3. Error source, cause, check method and remedy

<table>
<tr><th>Error source</th><th>Cause</th><th>Check method and remedy</th></tr>
<tr>
<td>Outdoor unit</td>
<td>(1) Number of indoor units connected to the outdoor terminal block (TB3) for indoor/ outdoor transmission lines exceeds limitations described below.
<table>
<tr><th>Number of units</th><th>Restriction on the number of units</th></tr>
<tr><td>Total number of indoor units</td><td>1 - 50: (E)P200 model
1 - 50: (E)P250 model
1 - 50: (E)P300 model
1 - 50: (E)P350 model
1 - 50: (E)P400 model
1 - 50: (E)P450 model
1 - 50: (E)P500 model</td></tr>
<tr><td>Number of HBC controllers</td><td>1 - 2 *1</td></tr>
<tr><td>Total number of outdoor units</td><td>1</td></tr>
</table>
*1 2 units in the case of P300 or later model
(2) Disconnected transmission line from the outdoor unit or BC controller
(3) Short-circuited transmission line
When (2) and (3) apply, the following display will appear.
♦ME remote controller
Nothing appears on the remote controller because it is not powered.
♦MA remote controller
"HO" or "PLEASE WAIT" blinks.
(4) The model selection switch (SW5-7) on the outdoor unit is set to OFF. (Normally set to ON)
(5) Outdoor unit address setting error
The outdoor units in the same refrigerant circuit do not have sequential address numbers.
(6) The units other than HBC controller and indoor units for exclusive use with HBC controller are connected.</td>
<td>1) Check whether the number of units connected to the outdoor terminal block (TB3) for indoor/ outdoor transmission lines does not exceed the limitation. (See (1) and (2) on the left.)
2) Check (2) - (3) on the left.
3) Check whether the transmission line for the terminal block for centralized control (TB7) is not connected to the terminal block for the indoor/outdoor transmission line (TB3).
4) Check the setting for the model selection switch on the outdoor unit (Dipswitches SW5-7 on the outdoor unit control board).</td>
</tr>
</table>

1. Error Code

7105

Address setting error

2. Error definition and error detection method

Erroneous setting of OC unit address
Erroneous setting of BC controller address

3. Cause, check method and remedy

Error source	Cause	Check method and remedy
Outdoor unit BC controller	Erroneous setting of OC unit address The address of outdoor unit is not being set to 51 - 100. The address of HBC controller is not set to 51 - 100.	Check that the outdoor unit and HBC controller addresses are set to 00 or a number between 51 and 100. If the outdoor unit address is out of the valid range, reset the address with the power to the outdoor unit turned off. If the HBC controller address is out of the valid range, reset the address with the power to both the outdoor unit and HBC controller turned off.

1. Error Code

7106

Attribute setting error

2. Error definition and error detection method

Error source	Cause	Check method and remedy
-	A remote controller for use with indoor units, such as the MA remote controller, is connected to the OA processing unit whose attribute is FU.	To operate the OA processing unit directly via a remote controller for use with indoor units, such as the MA remote controller, set the DIP SW 3-1 on the OA processing unit to ON. Operation Method: SW3-1 Interlocked operation with the indoor unit: OFF Direct operation via the MA remote controller: ON

1. Error Code

7107

Port setting error

2. Error definition and error detection method

The port with wrong number is connected to the indoor unit.The model total connected to the port is greater than the specification.

3. Cause, check method and remedy

Error source	Cause	Check method and remedy
HBC controller	(1) Model total of indoor units per each port or per each port merge is greater than the specification. Total port number: Single branching Model total: 80 (2) 4 or more indoor units are connected to the same port. (3) When two ports are used, the port with the smaller number is not connected to the indoor unit. (4) The address of the HBC controller is not set to an address that equals the address of the lowest address of the connected indoor unit plus 50.	**Before resetting the port number using the port number setting switch or the model using the model (capacity code) setting switch, turn off the power of the outdoor unit, the HBC controller and the indoor unit.**

1. Error Code

7110

Connection information signal transmission/reception error

2. Error definition and error detection method

The given indoor unit is inoperable because it is not properly connected to the outdoor unit in the same system.

3. Error source, cause, check method and remedy

Error source	Cause	Check method and remedy
Outdoor unit	(1) Power to the transmission booster is cut off.	1) Confirm that the power to the transmission booster is not cut off by the booster being connected to the switch on the indoor unit. (The unit will not function properly unless the transmission booster is turned on.)
	(2) Power resetting of the transmission booster and outdoor unit.	->Reset the power to the outdoor unit.
	(3) Wiring failure between OC and OS	2) Confirm that the TB3 on the OC and OS are properly connected.
	(4) Broken wire between OC and OS.	3) Check the model selection switch on the outdoor unit (Dipswitch SW5-7 on the control board.).
	(5) The model selection switch (SW5-7) on the outdoor unit is set to OFF. (Normally set to ON)	

1. Error Code

7113

Function setting error (incorrect resistor connection)

2. Error source, cause, check method and remedy

Error source	Cause	Check method and remedy
Outdoor unit	(1) Wiring fault (2) Loose connectors, short-circuit, contact failure (3) Incompatible control board and INV board (replacement with a wrong circuit board) (4) DIP SW setting error on the control board	(Detail code 15) 1) Check the connector CNTYP5 on the control board for proper connection.
		(Detail code 14) 1) Check the connector CNTYP4 on the control board for proper connection. 2) Check the settings of SW5-3 through SW5-6 on the control board.
		(Detail code 12) 1) Check the connector CNTYP2 on the control board for proper connection. 2) Check the connector CNTYP5 on the control board for proper connection. 3) Check the settings of SW5-3 through SW5-8 on the control board.
		(Detail code 16) 1) Check the connector CNTYP on the INV board for proper connection. 2) Check the connector CNTYP5 on the control board for proper connection. 3) Check the settings of SW5-3 through SW5-8 on the control board. 4) Check the wiring between the control board and INV board.
		(Detail code 00, 01, 05) 1) Check the wiring between the control board and INV board. 2) Check the settings of SW5-3 through SW5-8 on the control board. 3) Check the connector CNTYP5 on the control board for proper connection.
		(Detail code Miscellaneous) *If a set-model-name identification error occurs, check the detail code on the unit on which the error occurred. The detail code that appears on other units will be different from the ones shown above.

1. Error Code

7117

Model setting error

2. Error source, cause, check method and remedy

Error source	Cause	Check method and remedy
Outdoor unit	(1) Wiring fault (2) Loose connectors, short-circuit, contact failure	(Detail code 15) 1) Check the connector CNTYP5 on the control board for proper connection.
		(Detail code 14) 1) Check the connector CNTYP4 on the control board for proper connection.
		(Detail code 12) 1) Check the connector CNTYP2 on the control board for proper connection. 2) Check the connector CNTYP5 on the control board for proper connection.
		(Detail code 16) 1) Check the connector CNTYP on the INV board for proper connection. 2) Check the connector CNTYP5 on the control board for proper connection. 3) Check the wiring between the control board and INV board.
		(Detail code 0, 1, 5, 6) 1) Check the wiring between the control board and INV board. 2) Check the settings of SW5-3 through SW5-6 on the control board. 3) Check the connector CNTYP5 on the control board for proper connection.
		(Detail code Miscellaneous) *If a set-model-name identification error occurs, check the detail code on the unit on which the error occurred. The detail code that appears on other units will be different from the ones shown above.

1. Error Code

7130

Incompatible unit combination

2. Error source, cause, check method and remedy

Refer to 7130 in outdoor unit service handbook.

-1- Troubleshooting according to the remote controller malfunction or the external input error

In the case of MA remote controller

1. Phenomena

Even if the operation button on the remote controller is pressed, the display remains unlit and the unit does not start running.(Power indicator ◎ does not appear on the screen.)

(1) Cause

1) The power is not supplied to the indoor unit.
   - The main power of the indoor unit is not on.
   - The connector on the indoor unit board has come off.
   - The fuse on the indoor unit board has melted.
   - Transformer failure and disconnected wire of the indoor unit.
2) Incorrect wiring for the MA remote controller
   - Disconnected wire for the MA remote controller or disconnected line to the terminal block.
   - Short-circuited MA remote controller wiring
   - Incorrect wiring of the MA remote controller cables
   - Incorrect connection of the MA remote wiring to the terminal block for transmission line (TB5) on the indoor unit
   - Wiring mixup between the MA remote controller cable and 220 - 240 VAC power supply cable
   - Reversed connection of the wire for the MA remote controller and the M-NET transmission line on the indoor unit
3) The number of the MA remote controllers that are connected to an indoor unit exceeds the allowable range (2 units).
4) The length or the diameter of the wire for the MA remote controller are out of specification.
5) Short circuit of the wire for the remote display output of the outdoor unit or reversed polarity connection of the relay.
6) The indoor unit board failure
7) MA remote controller failure

(2) Check method and remedy

1) Measure voltages of the MA remote controller terminal (among 1 to 3).
   - If the voltage is between DC 9 and 12V, the remote controller is a failure.
   - If no voltage is applied, check the causes 1) and 3) and if the cause is found, correct it.
   If no cause is found, refer to 2).
2) Remove the wire for the remote controller from the terminal block (TB15) on the MA remote controller for the indoor unit, and check voltage among 1 to 3.
   - If the voltage is between DC 9 and 12 V, check the causes 2) and 4) and if the cause is found, correct it.
   - If no voltage is applied, check the cause 1) and if the cause is found, correct it.
   If no cause is found, check the wire for the remote display output (relay polarity).
   If no further cause is found, replace the indoor unit board.

In the case of MA remote controller

2. Phenomena

When the remote controller operation SW is turned on, the operation status briefly appears on the display, then it goes off, and the display lights out immediately, and the unit stops.

(1) Cause

1) The power for the M-NET transmission line is not supplied from the outdoor unit.
2) Short circuit of the transmission line.
3) Incorrect wiring of the M-NETtransmission line on the outdoorunit.
   - Disconnected wire for the MA remote controller or disconnected line to the terminal block.
   - The indoor transmission line is connected incorrectly to the transmission terminal block for centralized controller (TB7).
   - The male power supply connectors on the multiple outdoor units are connected to the female power supply switch connector (CN40).
   In the system to which the power supply unit for transmission lines is connected, the male power supply connector is connected to the female power supply switch connector (CN40) on the outdoor unit.
4) Disconnected M-NET transmission line on the indoor unit side.
5) Disconnected wire between the terminal block for M-NET line (TB5) of the indoor unit and the indoor unit board (CN2M) or disconnected connector.

(2) Check method and remedy

1) **When 2) and 3) above apply, check code 7102 will be displayed on the self-diagnosis LED.**

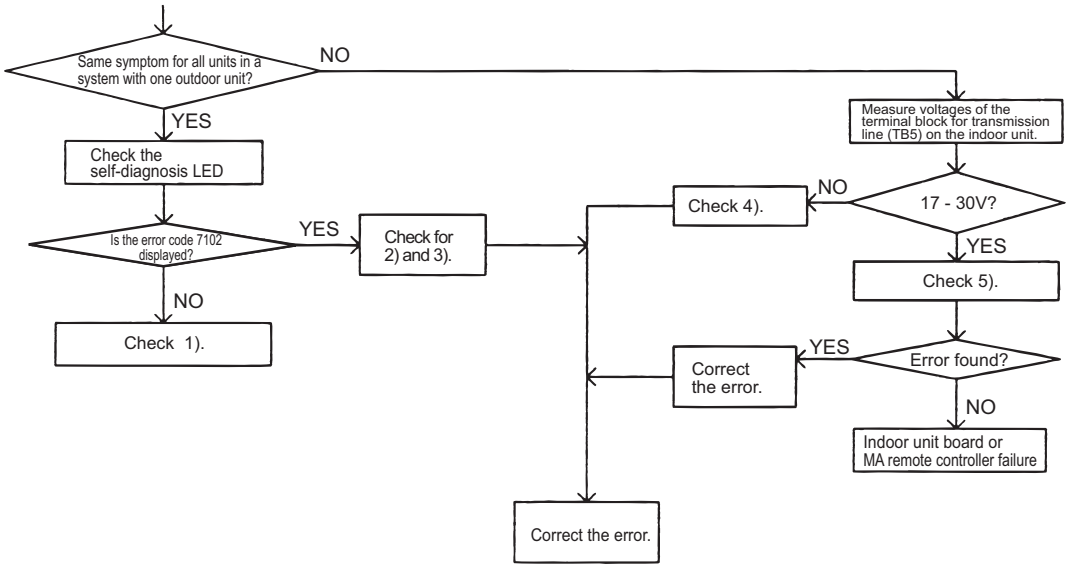

Refer to VIII [4] -3- (2) "Troubleshooting transmission power circuit of outdoor unit" for how to check item 1 in the flow chart above.(page 163)

In the case of MA remote controller

3. Phenomena

"HO" or "PLEASE WAIT" display on the remote controller does not disappear, and no operation is performed even if the button is pressed. ("HO" or "PLEASE WAIT" display will normally turn off 5 minutes later after the power on.)

(1) Cause

1) The power for the M-NET transmission line is not supplied from the outdoor unit.
2) Short-circuited transmission line
3) Incorrect wiring of the M-NET transmission line on the outdoor unit.
   - Disconnected wire for the MA remote controller or disconnected line to the terminal block.
   - The indoor transmission line is connected incorrectly to the transmission terminal block for centralized controller (TB7).
   - The male power supply connectors on the multiple outdoor units are connected to the female power supply switch connector (CN40).
     In the system to which the power supply unit for transmission lines is connected, the male power supply connector is connected to the female power supply switch connector (CN40) on the outdoor unit
4) Disconnected M-NET transmission line on the indoor unit.
5) Disconnected wire between the terminal block for M-NET line (TB5) of the indoor unit and the indoor unit board (CN2M) or disconnected connector.
6) Incorrect wiring for the MA remote controller
   - Short-circuited wire for the MA remote controller
   - Disconnected wire for the MA remote controller (No.2) and disconnected line to the terminal block.
   - Reversed daisy-chain connection between groups
   - Incorrect wiring for the MA remote controller to the terminal block for transmission line connection (TB5) on the indoor unit
   - The M-NET transmission line is connected incorrectly to the terminal block (TB15) for the MA remote controller.
7) The sub/main setting of the MA remote controller is set to sub.
8) 2 or more main MA remote controllers are connected.
9) Indoor unit board failure (MA remote controller communication circuit)
10) Remote controller failure
11) Outdoor unit failure

(2) Check method and remedy

1) **When 2) and 3) above apply, check code 7102 will be displayed on the self-diagnosis LED.**

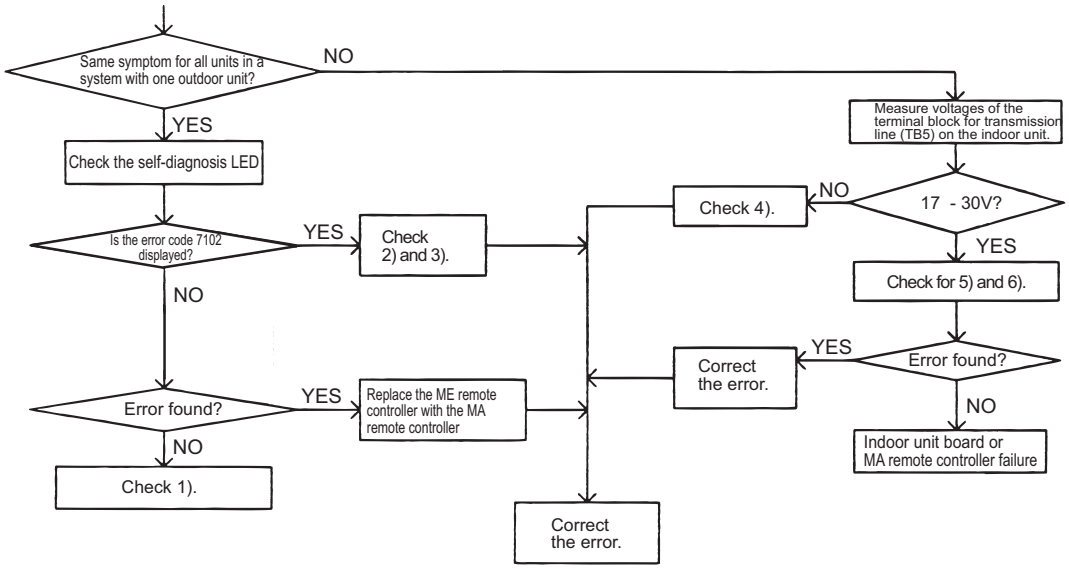

Refer to VIII [4] -3- (2) "Troubleshooting transmission power circuit of outdoor unit" for how to check item 1 in the flow chart above.(page 163)

Flow chart

Even if the operation button on the remote controller is pressed, the indoor and the outdoor units do not start running.

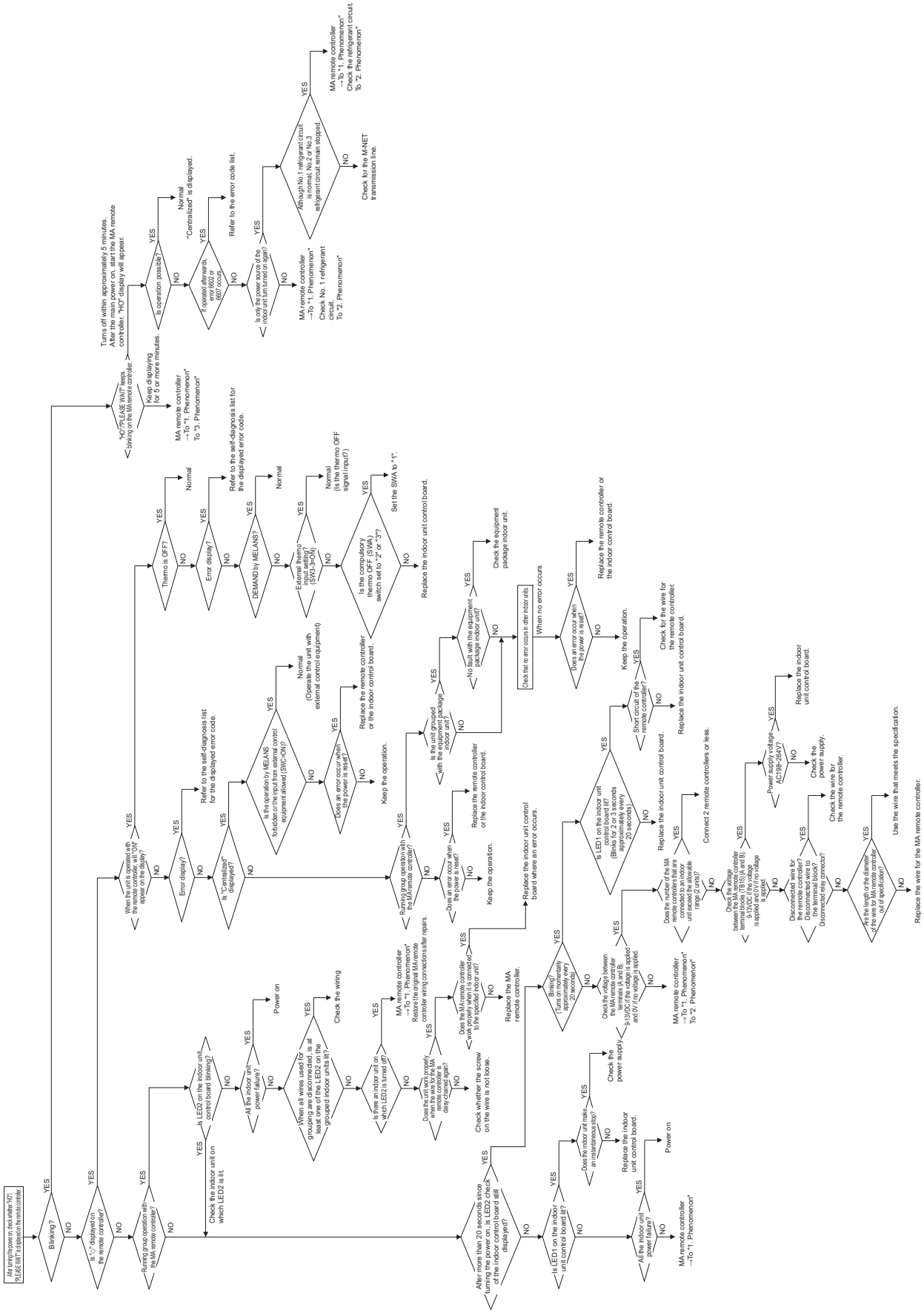

In case of ME remote controller

1. Phenomena

Even if the operation button on the remote controller is pressed, the display remains unlit and the unit does not start running. (Power indicator ◎ does not appear on the screen.)

(1) Cause

1) The power for the M-NET transmission line is not supplied from the indoor unit.
2) Short circuit of the transmission line.
3) Incorrect wiring of the M-NET transmission line on the outdoor unit.
   - Disconnected wire for the MA remote controller or disconnected line to the terminal block.
   - The indoor transmission line is connected incorrectly to the transmission terminal block for centralized controller (TB7).
4) Disconnected transmission line on the remote controller.
5) Remote controller failure
6) Outdoor unit failure

(2) Check method and remedy

1) Check voltage of the transmission terminal block for of the ME remote controller.
   - If voltage between is 17V and 30V -> ME remote controller failure
   - When voltage is 17V or less -> Refer to VIII [4] -3- (2) "Troubleshooting transmission power curcuit of outdoor unit".(page 163)
2) **When 2) and 3) above apply, check code 7102 will be displayed on the self-diagnosis LED.**

In case of ME remote controller

2. Phenomena

When the remote controller operation SW is turned on, a temporary operation display is indicated, and the display lights out immediately.

(1) Cause

1) The power is not supplied to the indoor unit.

- The main power of the indoor unit (AC220V) is not on.
- The connector on the indoor unit board has come off.
- The fuse on the indoor unit board has melted.
- Transformer failure and disconnected wire of the indoor unit
- The indoor unit board failure

2) The outdoor control board failure

As the indoor unit does not interact with the outdoor unit, the outdoor unit model cannot be recognized.

(2) Check method and remedy

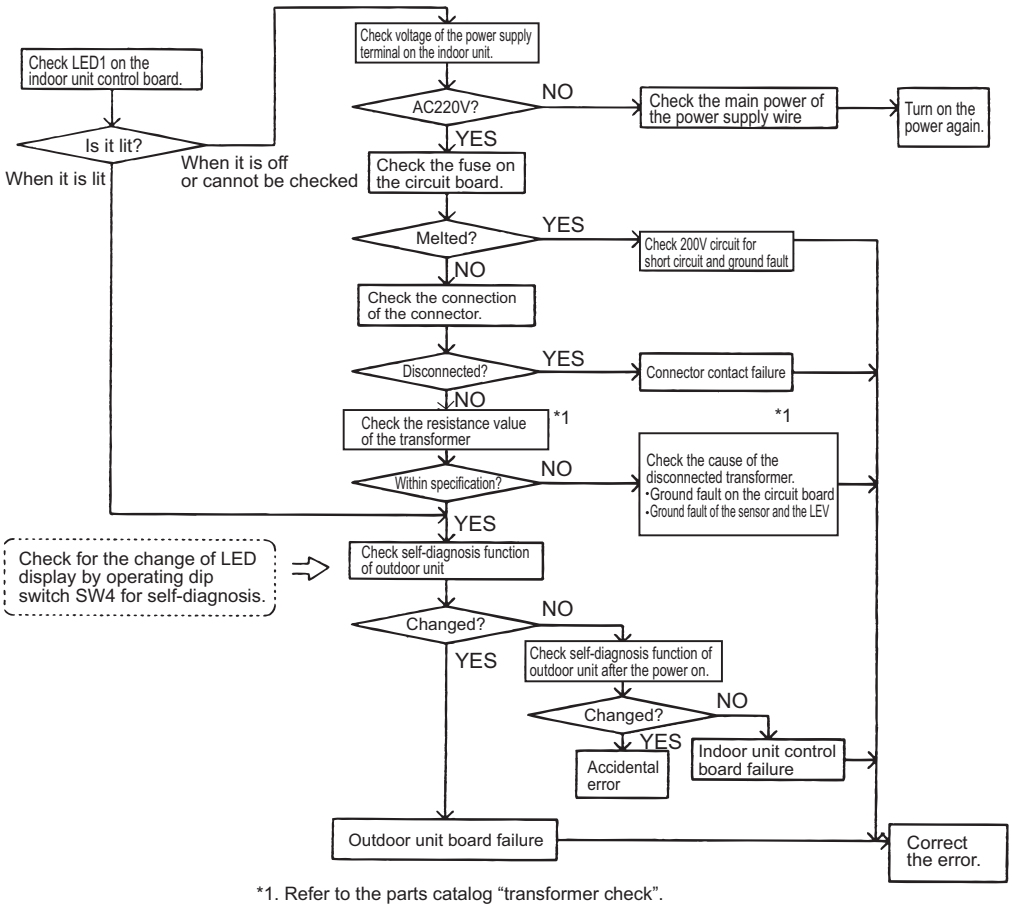

*1. Refer to the parts catalog “transformer check”.

In case of ME remote controller

3. Phenomena

"HO" display on the remote controller does not disappear, and no operation is performed even if the button is pressed.

(1) Cause

Without using MELANS

1) Outdoor unit address is set to "00"
2) A wrong address is set.
   - The address of the indoor unit that is connected to the remote controller is incorrect. (It should equal the ME remote controller address plus 100.)
   - A wrong address is set to the ME remote controller. (100 must be added to the address of the indoor unit.)
3) Faulty wiring of the terminal block for transmission line (TB5) of the indoor unit in the same group with the remote controller.
4) The centralized control switch (SW5-1) on the outdoor unit is set to ON.
5) Disconnection or faulty wiring of indoor unit transmission line.
6) Disconnection between the terminal block for M-NET line connection (TB5) of the indoor unit and the male connector (CN2M)
7) The male power supply connectors on 2 or more outdoor units are connected to the female power supply switch connector (CN40) for the transmission line for centralized control.
8) Outdoor unit control board failure
9) Indoor unit control board failure
10) Remote controller failure

Interlocking control with MELANS

11) No group registration is made using MELANS. (The indoor unit and the ME remote controller are not grouped.)
12) Disconnected transmission line for centralized control (TB7) of the outdoor unit
13) The male power supply connector is connected to CN40 on more than one outdoor unit, or the connector is connected to CN40 on the outdoor unit in the system to which a power supply unit for transmission line is connected.

Using MELANS

14) When MELANS is used, "HO" display on the remote controller will disappear when the indoor unit and the local remote controller (ME remote controller) are grouped.
    If "HO" does not disappear after the registration, check the causes (2) 1) - 3).

(2) Check method and remedy

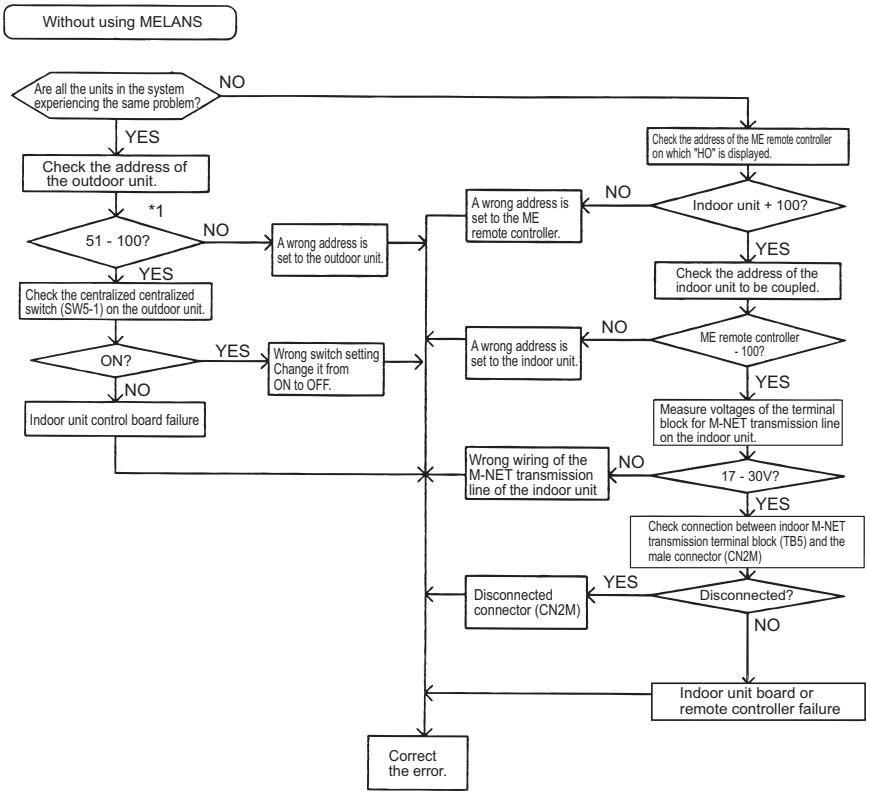

*1. When the indoor unit address is set to 1 - 50, the address will be forcibly set to 100.

In case of ME remote controller

4. Phenomena

"88" appears on the remote controller when the address is registered or confirmed.

(1) Cause, check method and remedy

Cause	Check method and remedy
An error occurs when the address is registered or confirmed. (common)	
1. A wrong address is set to the unit to be coupled.	(1) Confirm the address of unit to be coupled.
2. The transmission line of the unit to be coupled is disconnected or is not connected.	(2) Check the connection of transmission line.
3. Circuit board failure of the unit to be coupled	(3) Check voltage of the terminal block for transmission line of the unit to be coupled.
	1) Normal if voltage is between DC17 and 30V.
4. Improper transmission line work	2) Check (4) in case other than 1).
Generates at interlocking registration between LOSSNAY and the indoor unit	
5. The power of LOSSNAY is OFF.	(4) Check for the main power of LOSSNAY.
Generates at confirmation of controllers used in the system in which the indoor units connected to different outdoor units are grouped	
6. The power of the outdoor unit to be confirmed has been cut off.	(5) Check the power supply of the outdoor unit which is coupled with the unit to be confirmed.
7. The power of the outdoor unit to be confirmed has been cut off.	(6) Check that the transmission line for centralized control (TB7) of the outdoor unit is not disconnected.
8. When the indoor units connected to different outdoor units are grouped without MELANS, the male power supply connector is not connected to the female power supply switch connector (CN40) for the transmission line for centralized control.	(7) Check voltage of the transmission line for centralized control.
9. The male power supply connectors on 2 or more outdoor units are connected to the female power supply switch connector (CN40) for the transmission line for centralized control.	1) Normal when voltage is between 10V and 30V
10. In the system to which MELANS is connected, the male power supply connector is connected to the female power supply switch connector (CN40) for the transmission line for centralized control.	2) Check 8 - 11 described on the left in case other than 1).
11. Short circuit of the transmission line for centralized control	

Both for MA remote controller and ME remote controller

1. Phenomena

Although cooling operation starts with the normal remote controller display, the capacity is not enough

(1) Cause, check method and remedy

Cause	Check method and remedy
1. Compressor frequency does not rise sufficiently. ♦Faulty detection of pressure sensor. ♦Protection works and compressor frequency does not rise due to high discharge temperature ♦Protection works and compressor frequency does not rise due to high pressure ♦Pressure drops excessively.	(1) Check pressure difference between the detected pressure by the pressure sensor and the actual pressure with self-diagnosis LED. -> If the accurate pressure is not detected, check the pressure sensor. (Refer to the page on Trouble-shooting of Pressure Sensor in outdoor unit service handbook) Note: Lower inlet pressure by the low pressure sensor than the actual pressure causes insufficient capacity. SW4 setting (SW6-10: OFF) High pressure sensor SW4 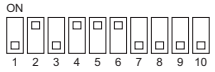 Low pressure sensor SW4 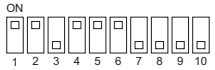 (2) Check temperature difference between the evaporating temperature (Te) and the target evaporating temperature (Tem) with self-diagnosis LED. Note: Higher Te than Tem causes insufficient capacity. SW4 setting (SW6-10: OFF) Evaporating temperature Te SW4 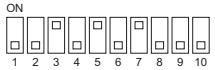 Target evaporating temperature Tem SW4 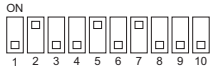 Note: Protection works and compressor frequency does not rise even at higher Te than Tem due to high discharge temperature and high pressure. At high discharge temperature: Refer to 1102 in outdoor unit service handbook At high pressure: Refer to 1302 in outdoor unit service handbook
2. HBC controller LEV1 and 2 actuation failure ♦Insufficient refrigerant flows due to LEV malfunction (not enough opening) or protection works and compressor frequency does not rise due to pressure drop.	Refer to the page of LEV troubleshooting ([4] -1-).(page 154)

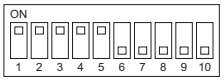

The figure at left shows that the switches 1 through 5 are set to ON and 6 through 10 are set to OFF.

Cause	Check method and remedy
3. RPM error of the outdoor unit FAN ♦Motor failure or board failure, or airflow rate decrease due to clogging of the heat exchanger ♦The fan is not properly controlled as the outdoor temperature cannot be precisely detected by the temperature sensor. ♦The fan is not properly controlled as the pressure cannot be precisely detected by the pressure sensor.	Refer to the page on troubleshooting of the outdoor unit fan in outdoor unit service handbook Refer to 5106 in outdoor unit service handbook Refer to 1302 in outdoor unit service handbook
4. Long piping length The cooling capacity varies greatly depending on the pressure loss. (When the pressure loss is large, the cooling capacity drops.)	Check the piping length to determine if it is contributing to performance loss. Piping pressure loss can be estimated from the temperature difference between the indoor unit heat exchanger outlet temperature and the saturation temperature (Te) of 63LS. ->Correct the piping.
5. Piping size is not proper (thin)	
6. Insufficient refrigerant amount Protection works and compressor frequency does not rise due to high discharge temperature.	Refer to 1-1. (Compressor frequency does not rise sufficiently.)(page 146) Refer to the page on refrigerant amount adjustment(page 94)
7. Clogging by foreign object	Check the temperature difference between in front of and behind the place where the foreign object is clogging the pipe (upstream side and downstream side). When the temperature drops significantly, the foreign object may clog the pipe. -> Remove the foreign object inside the pipe.
8. The indoor unit inlet temperature is excessively. (Less than 15°C [59°F] WB)	Check the inlet air temperature and for short cycling. Change the environment where the indoor unit is used.
9. Compressor failure The amount of circulating refrigerant decreases due to refrigerant leak in the compressor.	Check the discharge temperature to determine if the refrigerant leaks, as it rises if there is a leak.
10. HBC controller LEV3 actuation failure Sufficient cold water is not supplied as sufficient sub cool cannot be secured on the HBC controller due to LEVI, 2, and 3 actuation failure.	Refer to the page of LEV troubleshooting ([4] -1-).(page 154)
11. TH12, TH15 and 63HS1 sensor failure or faulty wiring LEV3 is not controlled normally.	♦Check the thermistor. ♦Check wiring.
12. HBC controller valve block actuation failure Sufficient cold water is not supplied because of the insufficient water flow rate and coexistence of cold and hot water on the HBC controller due to valve block actuation failure.	♦Refer to the section on valve block fault under "Troubleshooting." (page 168)

2. Phenomena

Although heating operation starts with the normal remote controller display, the capacity is not enough.

(1) Cause, check method and remedy

Cause	Check method and remedy
1. Compressor frequency does not rise sufficiently. ♦Faulty detection of pressure sensor. ♦Protection works and compressor frequency does not rise due to high discharge temperature ♦Protection works and compressor frequency does not rise due to high pressure.	(1) Check pressure difference between the detected pressure by the pressure sensor and the actual pressure with self-diagnosis LED. -> If the accurate pressure is not detected, check the pressure sensor. (Refer to the page on Trouble-shooting of Pressure Sensor in outdoor unit service handbook) Note: Higher inlet pressure by the high pressure sensor than the actual pressure causes insufficient capacity. SW4 setting (SW6-10: OFF) High pressure sensor SW4 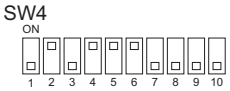 Low pressure sensor SW4 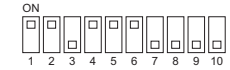 (2) Check the difference between the condensing temperature (Tc) and the target condensing temperature (Tcm) with self-diagnosis LED. Note: Higher Tc than Tcm causes insufficient capacity. SW4 setting (SW6-10: OFF) Condensing temperature Tc SW4 Target condensing temperature Tcm SW4 Note: Protection works and compressor frequency does not rise even at lower Tc than Tcm due to high discharge temperature and high pressure. At high discharge temperature: Refer to 1102 in outdoor unit service handbook At high pressure: Refer to 1302 in outdoor unit service handbook

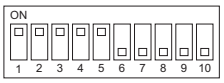

The figure at left shows that the switches 1 through 5 are set to ON and 6 through 10 are set to OFF.

Cause		Check method and remedy
2.	HBC controller LEV1 and 2 actuation failure Sufficient hot water is not supplied on the HBC controller due to HBC controller LEVI, 2, and 3 actuation failure.	Refer to the page of LEV troubleshooting ([4] -1-). (page 154)
3.	Temperature reading error on the indoor unit piping temperature sensor If the temperature reading on the sensor is higher than the actual temperature, it makes the subcool seem smaller than it is, and the LEV opening decreases too much.	Check the thermistor.
4	RPM error of the outdoor unit FAN ♦Motor failure or board failure, or airflow rate decrease, pressure drop due to clogging of the heat exchanger leading to high discharge temperature ♦The fan is not properly controlled as the temperature cannot be precisely detected with the piping sensor.	Refer to the page on outdoor unit fan in outdoor unit service handbook
5.	Insulation failure of the refrigerant piping	
6.	Long piping length Excessively long piping on the high pressure side causes pressure loss leading to increase in the high pressure.	Confirm that the characteristic of capacity drop due to piping length. -> Change the pipe
7.	Piping size is not proper (thin)	
8.	Clogging by foreign object	Check the temperature difference between the upstream and the downstream of the pipe section that is blocked. Since blockage in the extended section is difficult to locate, operate the unit in the cooling cycle, and follow the same procedures that are used to locate the blockage of pipe during cooling operation. ->Remove the blockage in the pipe.
9.	The indoor unit inlet temperature is excessively high.(exceeding 28°C [82°F])	Check the inlet air temperature and for short cycling. Change the environment where the indoor unit is used.
10.	Insufficient refrigerant amount Protection works and compressor frequency does not rise due to low discharge temperature Refrigerant recovery operation is likely to start.	Refer to 2 - 1. (Compressor frequency does not rise sufficiently.)(page 148) Refer to the page on refrigerant amount adjustment.(page 94)
11.	Compressor failure (same as in case of cooling)	Check the discharge temperature.
12.	HBC controller LEV3 actuation failure A drop in the low pressure that is caused either by a blockage of liquid pipe or by a pressure loss and the resultant slowing of refrigerant flow causes a tendency for the discharge temperature to rise.	Refer to the page of LEV troubleshooting ([4] -1-). (page 154)
13.	HBC controller valve block actuation failure Sufficient hot water is not supplied because of the insufficient water flow rate and coexistence of cold and hot water on the HBC controller due to valve block actuation failure.	Refer to the section on valve block fault under "Troubleshooting." (page 168)

3. Phenomena

Outdoor unit stops at times during operation.

(1) Cause, check method and remedy

Cause	Check method and remedy
The first stop is not considered as an error, as the unit turns to anti-restart mode for 3 minutes as a preliminary error. **Error mode** 1) Abnormal high pressure 2) Abnormal discharge air temperature 3) Heatsink thermistor failure 4) Thermistor failure 5) Pressure sensor failure 6) Over-current break 7) Refrigerant overcharge Note1: Frost prevention tripping only under cooling mode may be considered in addition to the above. (Freeze protection is detected by one or all indoor units.) Note2: Even the second stop is not considered as an error when some specified errors occur. (eg. The third stop is considered as an error when the thermistor error occurs.)	(1) Check the mode operated in the past by displaying preliminary error history on LED display with SW4. (2) Reoperate the unit to find the mode that stops the unit by displaying preliminary error history on LED display with SW4 Refer to the reference page for each error mode. *Display the indoor piping temperature table with SW4 to check whether the freeze proof operation runs properly, and check the temperature.

[3] Investigation of Transmission Wave Shape/Noise

1. M-NET transmission

Control is performed by exchanging signals between the outdoor unit and the indoor unit (ME remote controller) through M-NET transmission. Noise interference on the transmission line will interrupt the normal transmission, leading to erroneous operation.

(1) Symptoms caused by noise interference on the transmission line

Cause	Erroneous operation	Error code	Error code definition
Noise interference on the transmission line	Signal is transformed and will be misjudged as the signal of another address.	6600	Address overlap
	Transmission wave pattern is transformed due to the noise creating a new signal	6602	Transmission processor hardware error
	Transmission wave pattern is transformed due to the noise, and will not be received normally leading to no acknowledgement (ACK).	6607	No ACK error
	Transmission cannot be performed due to the fine noise.	6603	Transmission line bus busy error
	Transmission is successful; however, the acknowledgement (ACK) or the response cannot be received normally due to the noise.	6607 6608	No ACK error No response error

(2) Wave shape check

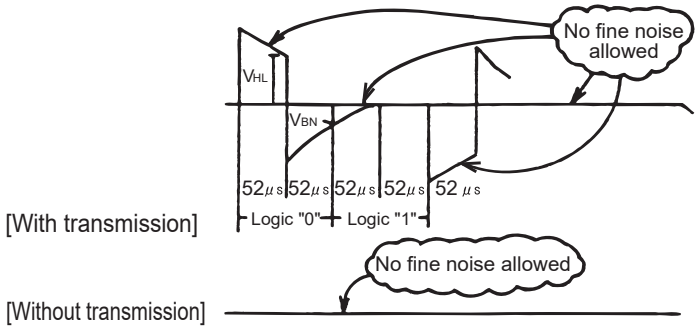

Wave shape check

Check the wave pattern of the transmission line with an oscilloscope. The following conditions must be met.

1) Small wave pattern (noise) must not exist on the transmission signal. (Minute noise (approximately 1V) can be generated by DC-DC converter or the inverter operation; however, such noise is not a problem when the shield of the transmission line is grounded.)
2) The sectional voltage level of transmission signal should be as follows.

Logic	Voltage level of the transmission line
0	V_{HL} = 2.5V or higher
1	V_{BN} = 1.3V or below

(3) Check method and remedy

1) Measures against noise
Check the followings when noise exists on the wave or the errors described in (1) occur.

	Error code definition	Remedy
Check that the wiring work is performed according to wiring specifications.	1. The transmission line and the power line are not wired too closely.	Isolate the transmission line from the power line (5cm [1-31/32"] or more). Do not insert them in the same conduit.
	2. The transmission line is not bundled with that for another systems.	The transmission line must be isolated from another transmission line. When they are bundled, erroneous operation may be caused.
	3. The specified wire is used for the transmission line.	Use the specified transmission line. Type: Shielded wire CVVS/CPEVS/MVVS (For ME remote controller) Diameter: 1.25mm^2 [AWG16] or more (Remote controller wire: 0.3 - 1.25mm^2 [AWG22-16])
	4. When the transmission line is daisy-chained on the indoor unit terminals, are the shields daisy-chained on the terminals, too?	The transmission is two-wire daisy-chained. The shielded wire must be also daisy-chained. When the shielded cable is not daisy-chained, the noise cannot be reduced enough.
Check that the grounding work is performed according to grounding specifications.	5. Is the shield of the indoor-outdoor transmission cable grounded to the earth terminal on the outdoor unit?	Connect the shield of the indoor-outdoor transmission cable to the earth terminal (⏚) on the outdoor unit. If no grounding is provided, the noise on the transmission line cannot escape leading to change of the transmission signal.
	6. Check the treatment method of the shield of the transmission line (for centralized control).	The transmission cable for centralized control is less subject to noise interference if it is grounded to the outdoor unit whose power jumper cable was moved from CN41 to CN40 or to the power supply unit. The environment against noise varies depending on the distance of the transmission lines, the number of the connected units, the type of the controllers to be connected, or the environment of the installation site. Therefore, the transmission line work for centralized control must be performed as follows. 1. When no grounding is provided: Ground the shield of the transmission cable by connecting to the outdoor unit whose power jumper connector was moved from CN41 to CN40 or to the power supply unit. 2. When an error occurs even though one point grounding is provided: Ground the shield on all outdoor units.

2) Check the followings when the error "6607" occurs, or "HO" appears on the display on the remote controller.

Error code definition	Remedy
7. The farthest distance of transmission line is 200m [656ft] or longer.	Check that the farthest distance from the outdoor unit to the indoor unit and to the remote controller is within 200m [656ft].
8. The types of transmission lines are different.	Use the specified transmission line. Type: Shielded wire CVVS/CPEVS/MVVS (For ME remote controller) Diameter: 1.25mm^2 [AWG16] or more (Remote controller wire: 0.3-1.25mm^2 [AWG22-16])
9. Outdoor unit circuit board failure	Replace the outdoor unit control board or the power supply board for the transmission line.
10. Indoor unit circuit board failure or remote controller failure	Replace the indoor unit circuit board or the remote controller.
11. The MA remote controller is connected to the M-NET transmission line.	Connect the MA remote controller to the terminal block for MA remote controller (TB15).

2. MA remote controller transmission

The communication between the MA remote controller and the indoor unit is performed with current tone burst.

(1) Symptoms caused by noise interference on the transmission line

If noise is generated on the transmission line, and the communication between the MA remote controller and the indoor unit is interrupted for 3 minutes in a row, MA transmission error (6831) will occur.

(2) Confirmation of transmission specifications and wave pattern

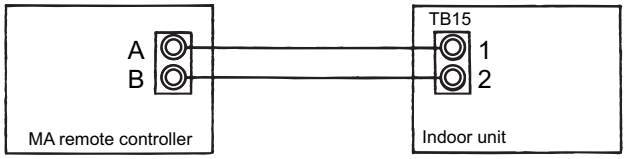

A, B : No polarity
Across terminal No. 1-2
: Power supply (9V to 12VDC)

Transmission waveform (Across terminal No.1 - 2)

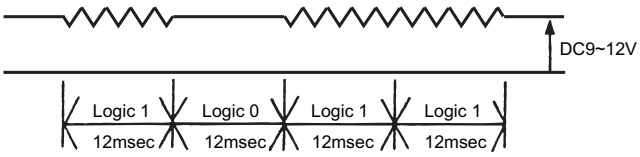

① Satisfies the formula
12 msec/bit ± 5%

② Voltage among terminals must be between DC9 and 12 V.

[4] Troubleshooting Principal Parts

-1- LEV

LEV operation

HBC controller LEVI, 2, and 3 (linear expansion valves) are driven by the pulse signal from the control board and are controlled by a stepping motor.

(1) HBC controller LEV

The valve opening changes according to the number of pulses.

1) Control boards and the LEV (HBC controller LEV1, 2, 3)

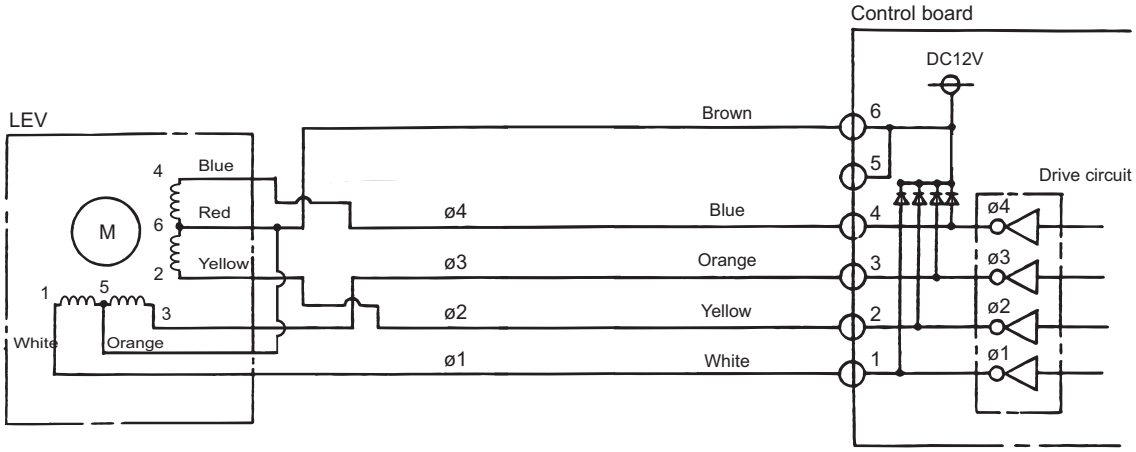

2) Pulse signal output and valve operation

Output (phase) number	Output state			
	1	2	3	4
ϕ1	ON	OFF	OFF	ON
ϕ2	ON	ON	OFF	OFF
ϕ3	OFF	ON	ON	OFF
ϕ4	OFF	OFF	ON	ON

Output pulses change in the following orders when the
Valve is closed; 1 →2 →3 → 4 → 1
Valve is open; 4 →3 →2 → 1 → 4

*1. When the LEV opening angle does not change, all the output phases will be off.
*2. When the output is open phase or remains ON, the motor cannot run smoothly, and rattles and vibrates.

3) LEV valve closing and opening operation

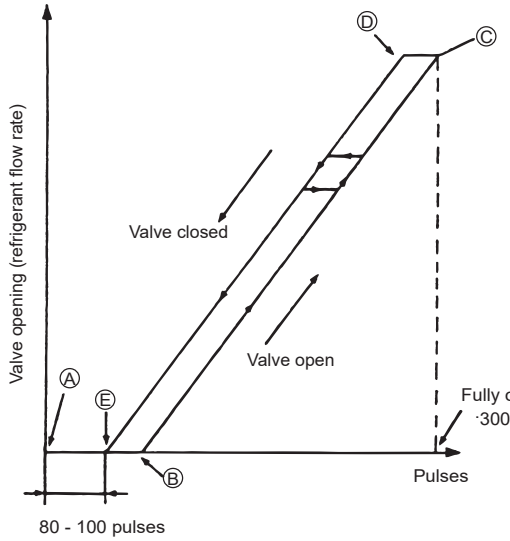

* Upon power on, the HBC controller circuit board sends 3200 Hz pulse signals to the LEVs (HBC controller LEV 1, 2, and 3) to determine the valve position and bring the valve to the position as indicated by Ⓐ in the diagram.

When the valve operates smoothly, no sound from LEV or no vibration occurs, however, when the pulses change from Ⓔ to Ⓐ in the chart or the valve is locked, a big sound occurs.

*Whether a sound is generated or not can be determined by holding a screwdriver against it, then placing your ear against the handle.

*1 The LEV opening may become greater depending on the operation status.

(2) Judgment methods and possible failure mode

Malfunction mode	Judgment method	Remedy
Microcomputer driver circuit failure	Disconnect the control board connector and connect the check LED as shown in the figure below. 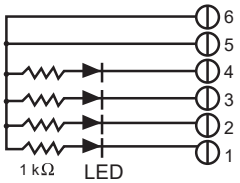 resistance : 0.25W 1kΩ LED : DC15V 20mA or more When the main power is turned on, the indoor unit circuit board outputs pulse signals to the indoor unit LEV for 10 seconds. If any of the LED remains lit or unlit, the drive circuit is faulty.	When the drive circuit has a problem, replace the control board.
LEV mechanism is locked	If the LEV is locked, the drive motor runs idle, and makes a small clicking sound. When the valve makes a closing and opening sound, the valve has a problem.	Replace the LEV.
Disconnected or short-circuited LEV motor coil	Measure resistance between the coils (red - white, red -orange, brown - yellow, brown - blue) using a tester. They are normal if resistance is 150ohm ± 10%.	Replace the LEV coils.
Faulty wire connections in the connector or faulty contact	1. Check for loose pins on the connector and check the colors of the lead wires visually 2. Disconnect the control board's connector and conduct a continuity check using a tester.	Check the continuity at the points where an error occurs.

-2- Troubleshooting Principal Parts of HBC Controller

1. Pressure sensor

Troubleshooting flow chart for pressure sensor

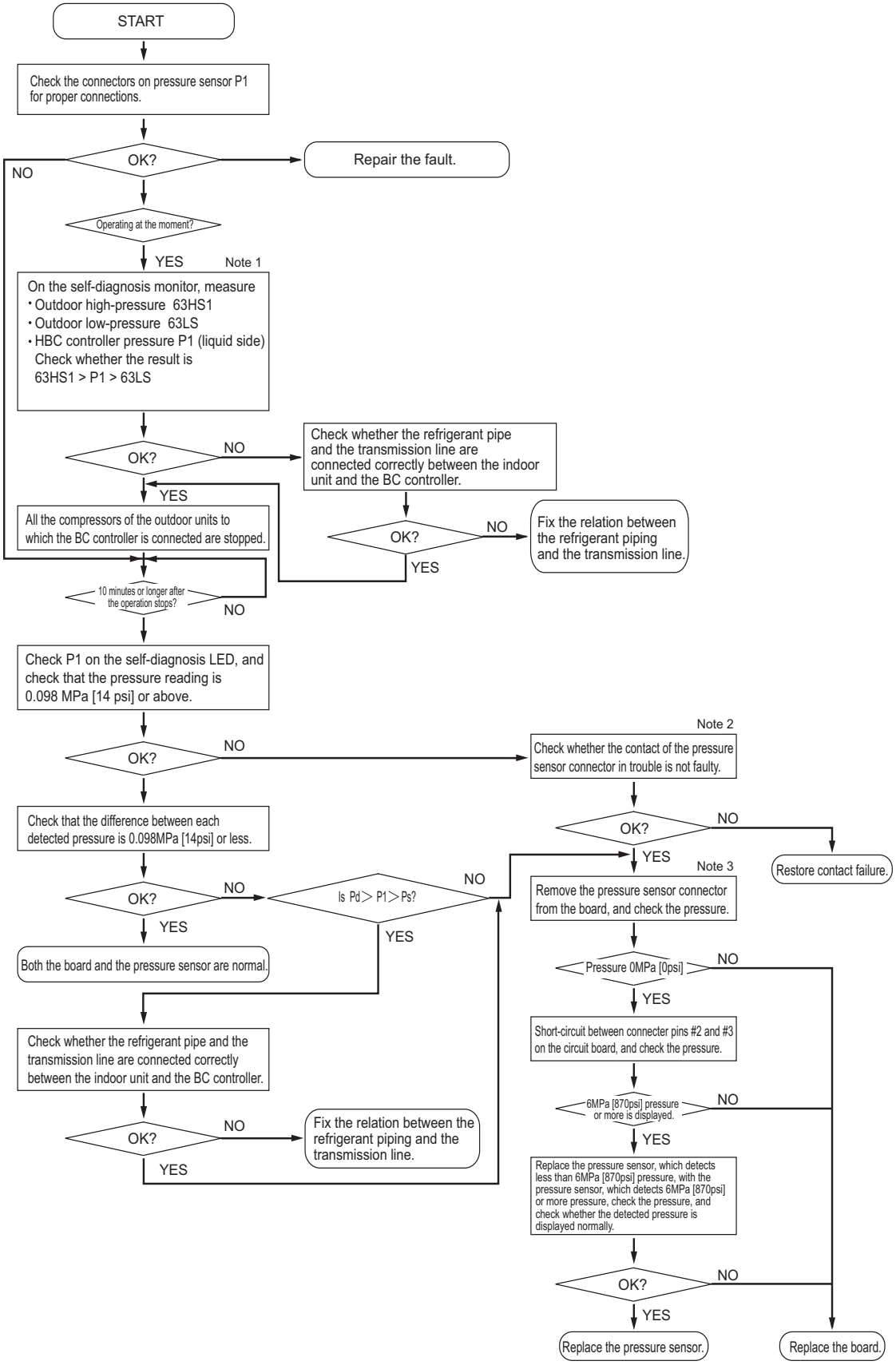

Note

1) Check the self-diagnosis switch (Outdoor control board SW4 (SW6-10:OFF)).

Measurement data	Symbol	SW4 setting value
Outdoor high pressure	63HS1	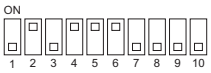
Outdoor low pressure	63LS	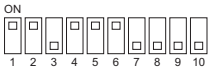

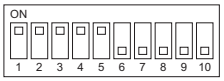

The figure at left shows that the switches 1 through 5 are set to ON and 6 through 10 are set to OFF.

Note

2) Check CNP1 connector on the HBC controller control board for proper connections.
3) Check the pressure value on the self-diagnosis switch (same as note 2) with the connector of the applied pressure sensor is disconnected from the board.

2. Temperature sensor

Troubleshooting instructions for thermistor

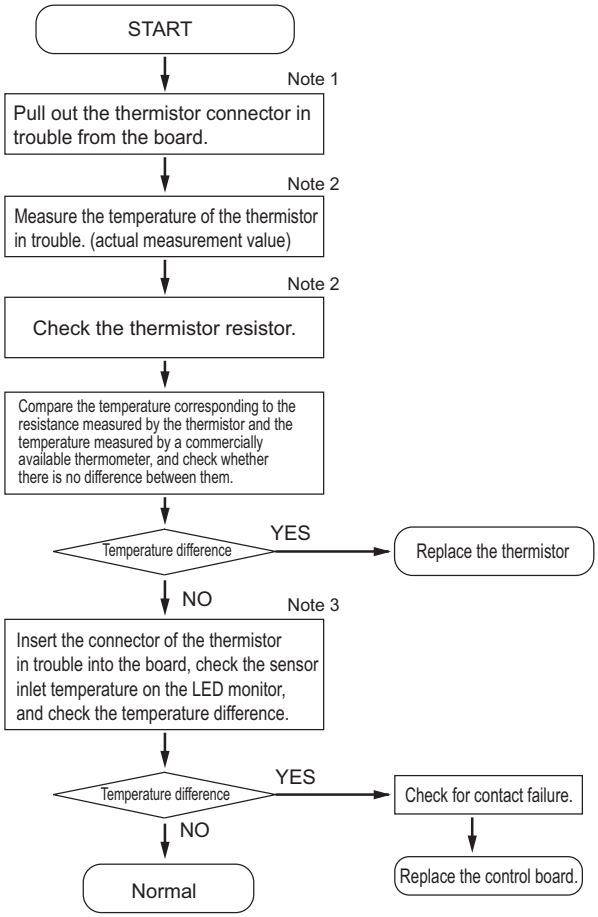

Note

1) Connectors on the circuit board are connected to the sensors as follows. Unplug the corresponding connectors before checking each sensor.

Sensor	Connectable connector
TH11~TH12	CN501
TH13~TH14	CN502
TH15~TH16	CN511
TH31a~TH31b	CN503
TH31c~TH31d	CN504
TH31e~TH31f	CN508
TH31g~TH31h	CN509
TH32~TH33	CN510
TH31i~TH31j, TH34	CN505
TH31k~TH31l, TH35	CN506
TH31m~TH31n	CN507
TH31o	CN515
TH31p	CN516

2)

- Pull out the sensor connector from the I/O board, Do not pull the sensor by holding the lead wire.
- Measure the resistance with such as a tester.
- Compare the measured value with that of shown in the figure below. When the result is ± 10%, it is normal.

3. Troubleshooting flow chart for LEV, Solenoid valve, and Valve block

(1) LEV

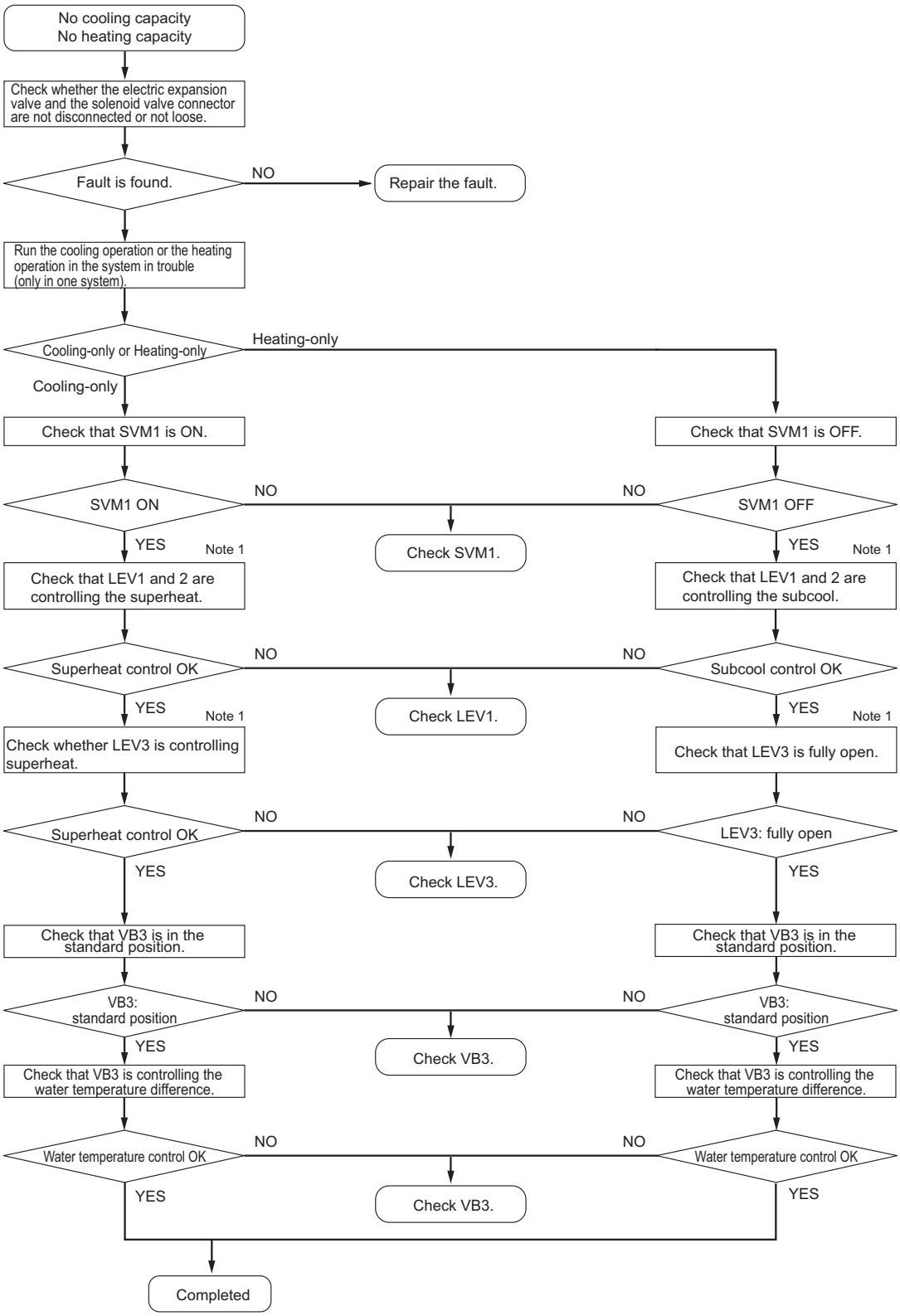

Note

1) Refer to Chapter "Control" for superheat, subcool, and water temperature difference.

Troubleshooting flow chart for solenoid valve body

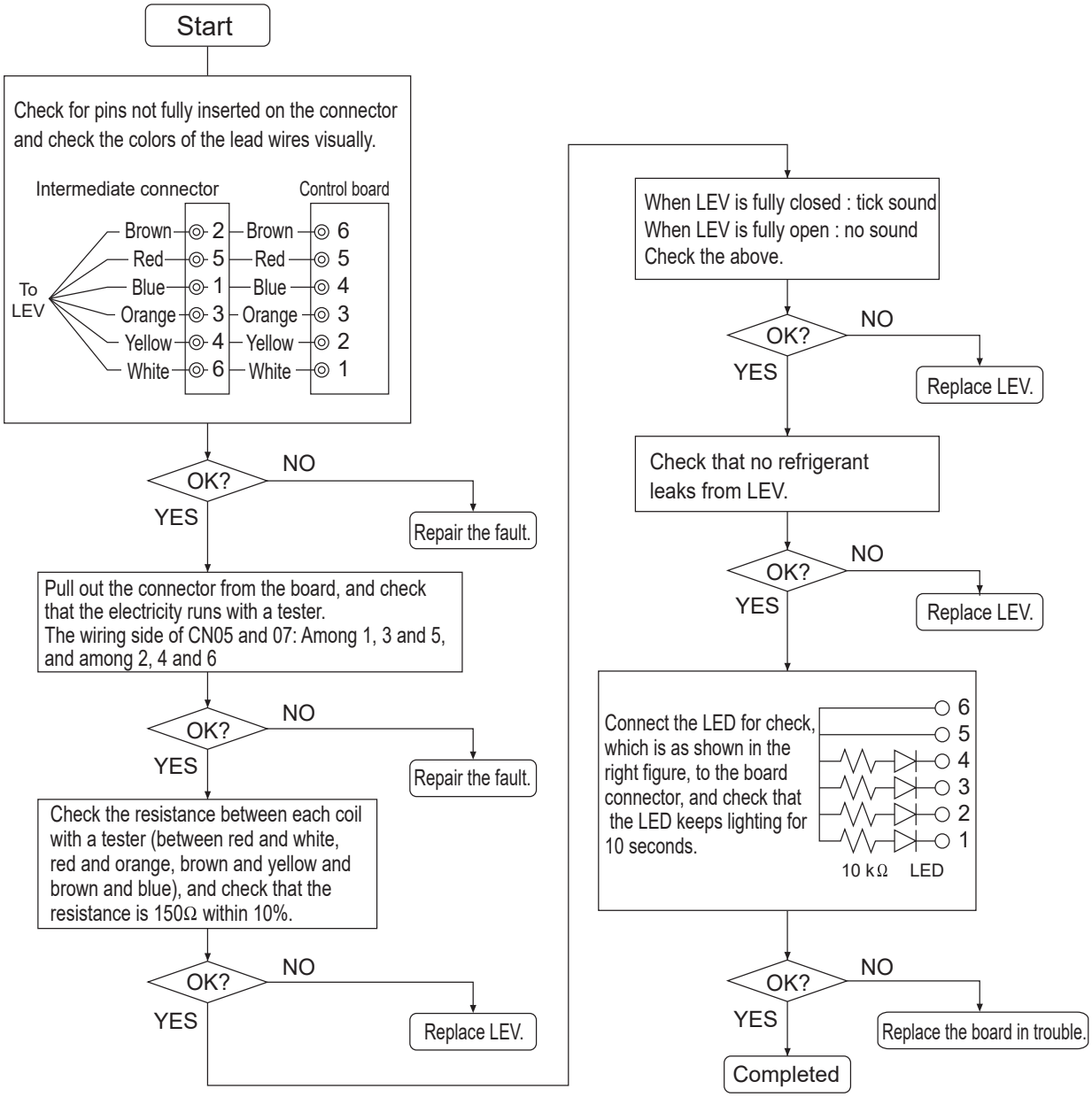

-3- Control Circuit

(1) Control power source function block

1) PURY-(E)M***YNW-A/PURY-(E)P***YNW-A

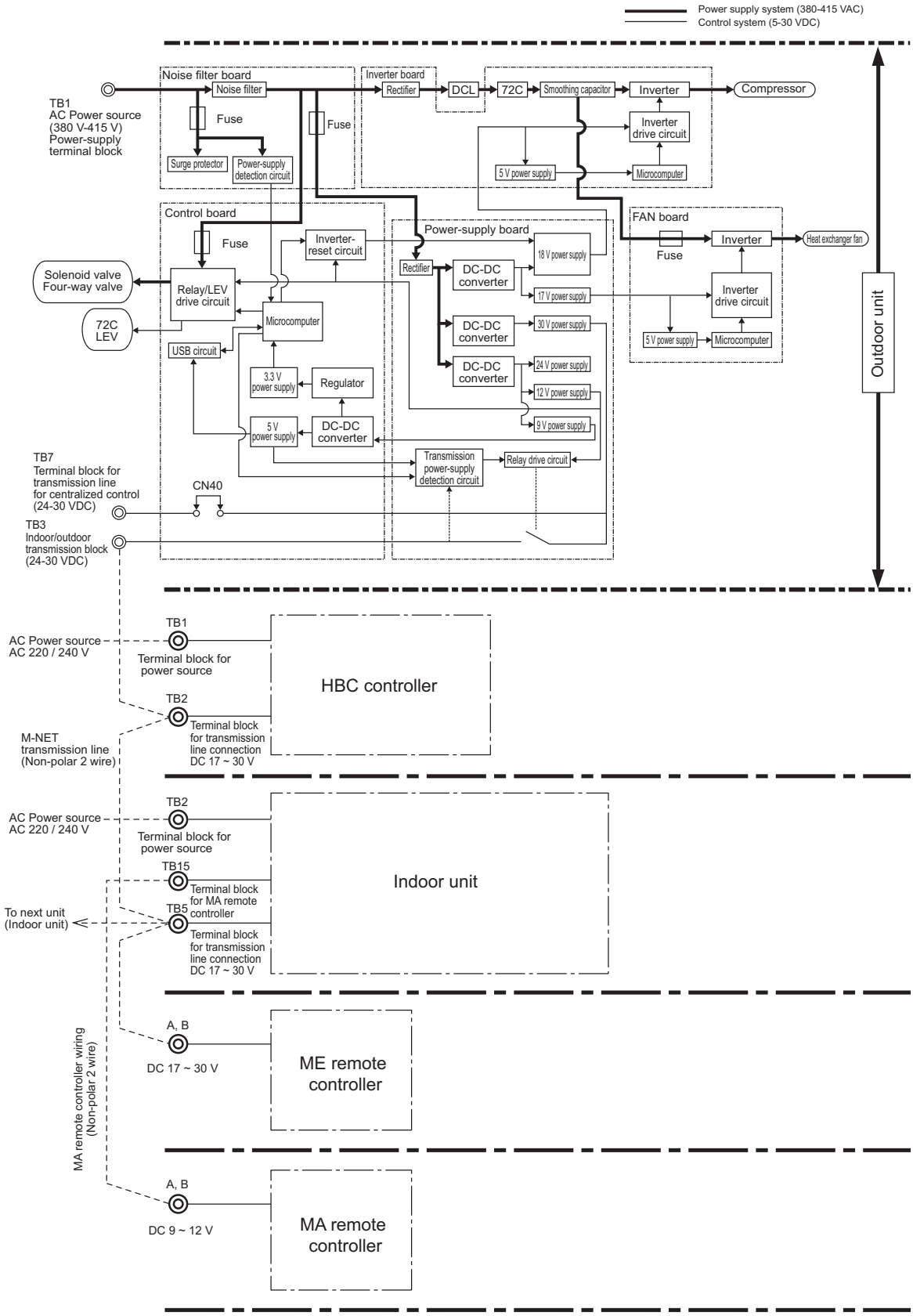

* MA remote controllers and ME remote controllers cannot be used together.
(Both the ME and MA remote controller can be connected to a system with a system controller.)

2) PURY-(E)P***YLM-A

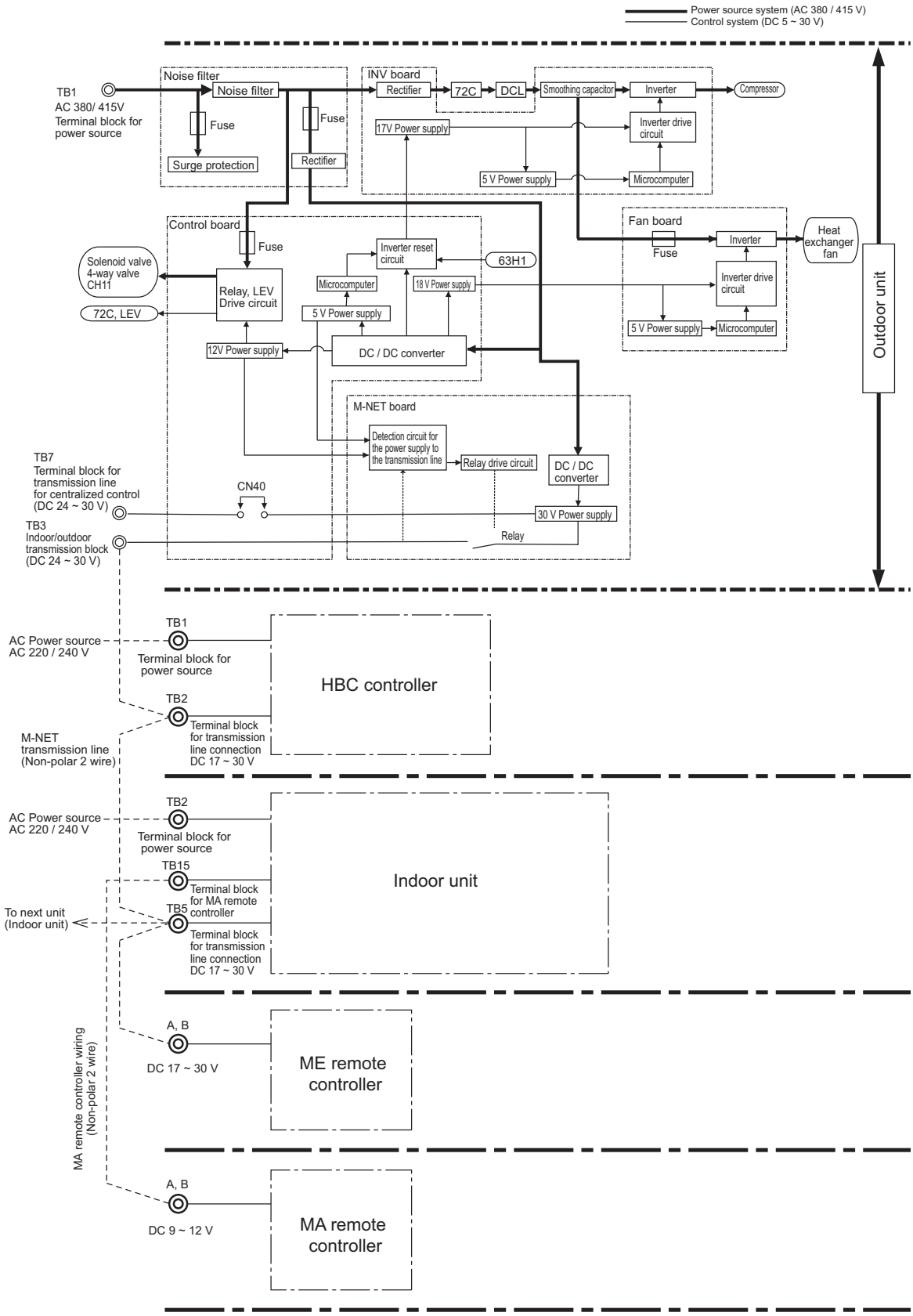

* MA remote controllers and ME remote controllers cannot be used together.
(Both the ME and MA remote controller can be connected to a system with a system controller.)

(2) Troubleshooting transmission power circuit of outdoor unit

1) PURY-(E)M***YNW-A/PURY-(E)P***YLM-A

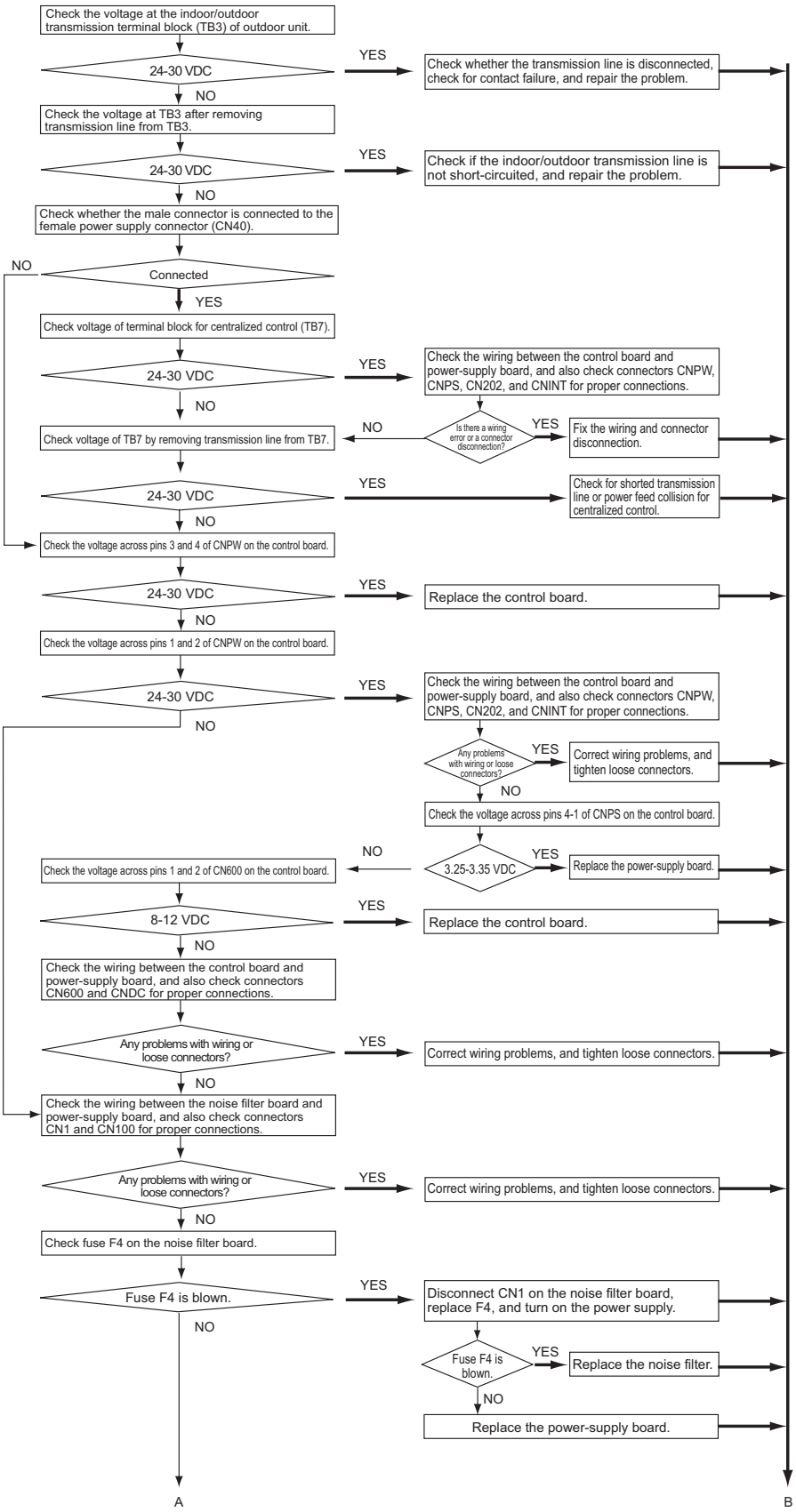

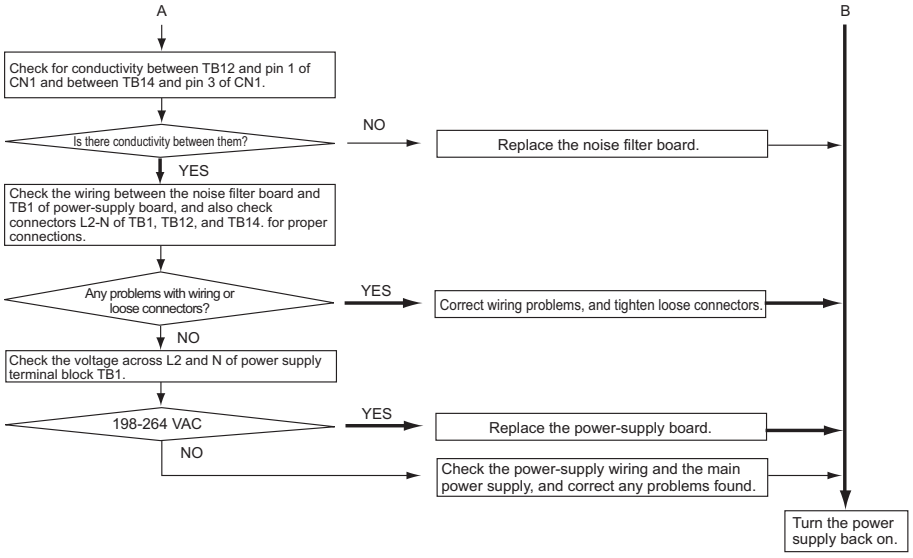
A
B
Check for conductivity between TB12 and pin 1 of CN1 and between TB14 and pin 3 of CN1.
Is there conductivity between them?
NO
Replace the noise filter board.
YES
Check the wiring between the noise filter board and TB1 of power-supply board, and also check connectors L2-N of TB1, TB12, and TB14. for proper connections.
Any problems with wiring or loose connectors?
YES
Correct wiring problems, and tighten loose connectors.
NO
Check the voltage across L2 and N of power supply terminal block TB1.
198-264 VAC
YES
Replace the power-supply board.
NO
Check the power-supply wiring and the main power supply, and correct any problems found.
Turn the power supply back on.

2) PURY-(E)P***YLM-A

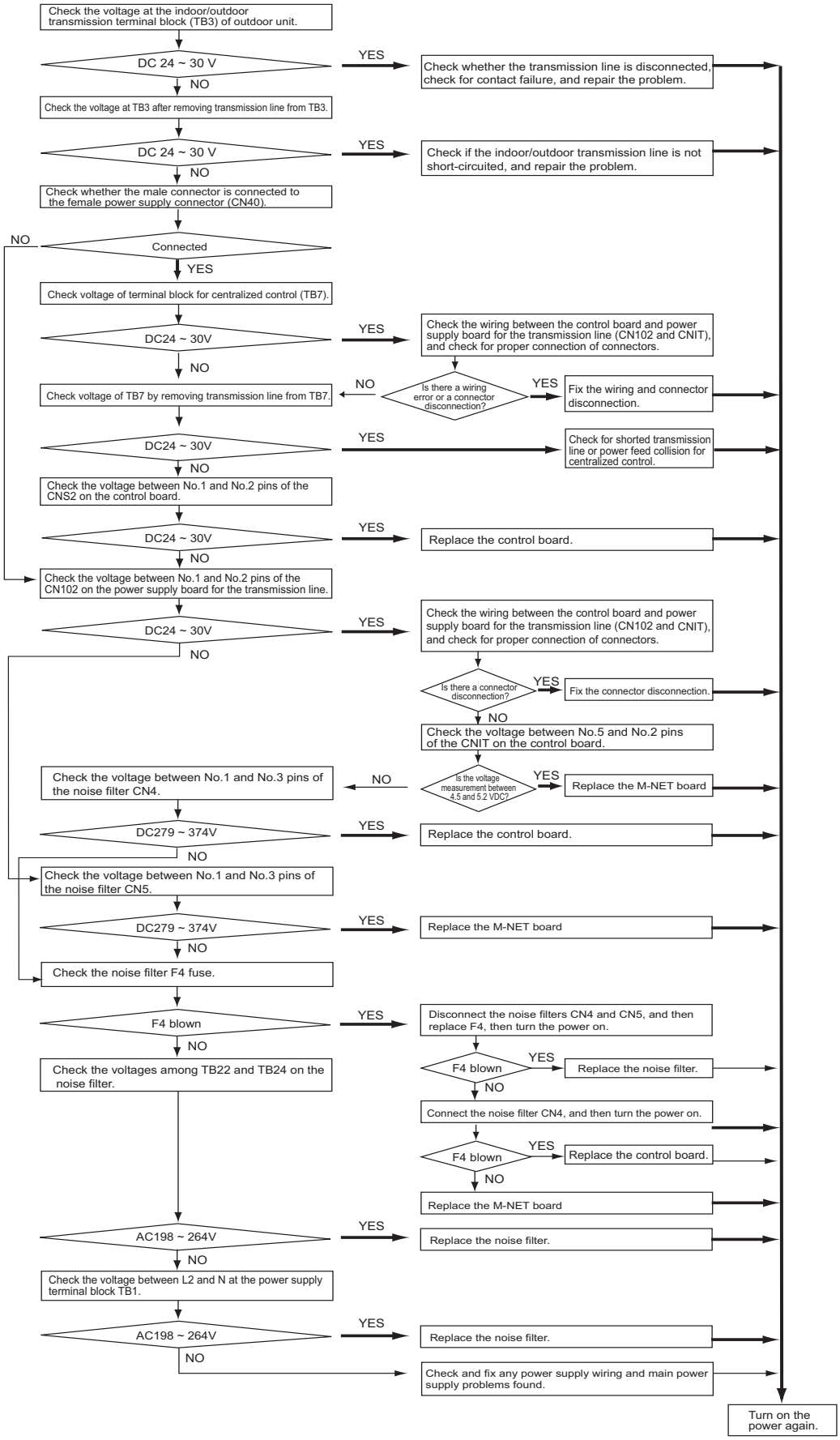

[5] Refrigerant Leak

1. Leak spot: In the case of extension pipes and HBC controller (Cooling season)

1) Mount a pressure gauge on the service check joint (CJ2) on the low-pressure side.
2) Stop all the indoor units, and close the high-pressure side refrigerant service valve (BV2) on the outdoor unit while the compressor is being stopped.
3) Stop all the indoor units; turn on SW4 (912) on the outdoor unit control board while the compressor is being stopped. (Pump down mode will start, and all the indoor units will run in cooling test run mode.)
4) In the pump down mode (SW4 (912) is ON), all the indoor units and compressors will automatically stop when the low pressure (63LS) reaches 0.383MPa [55psi] or less or 15 minutes have passed after the pump mode started. Stop all the indoor units and compressors when the pressure indicated by the pressure gauge, which is on the check joint (CJ2) for low-pressure service, reaches 0.383MPa [55psi] or 20 minutes pass after the pump down operation is started.
5) Close the service ball valve (BV1) on the low-pressure pipe on the outdoor unit.
6) Collect the refrigerant that remains in the extended pipe for the HBC controller. Do not discharge refrigerant into the atmosphere when it is collected.
7) Repair the leak.
8) After repairing the leak, vacuum*1 the extension pipe and the HBC controller.
9) To adjust refrigerant amount, open the ball valves (BV1 and BV2) inside the outdoor unit and turn off SW2-4.

2. Leak spot: In the case of outdoor unit (Cooling season)

(1) Run all the indoor units in the cooling test run mode.

1) To run the indoor unit in test run mode, turn SW4 (769) on the outdoor unit control board to ON.
2) Change the setting of the remote controller for all the indoor units to the cooling mode.
3) Check that all the indoor units are performing a cooling operation.

(2) Stop all the indoor units, and stop the compressor.

1) To stop all the indoor units and the compressors, turn SW4 (769) on the outdoor control board from ON to OFF.
2) Check that all the indoor units are being stopped.

(3) Close the ball valves (BV1 and BV2).

(4) Collect the refrigerant that remains inside the outdoor unit. Do not discharge refrigerant into air into the atmosphere when it is collected.

(5) Repair the leak.

(6) After repairing the leak, replace the dryer with the new one, and perform evacuation *1 inside the outdoor unit.

(7) To adjust refrigerant amount, open the ball valves (BV1 and BV2) inside the outdoor unit.

*1. Refer to Chapter I [8] Vacuum Drying (Evacuation) for detailed procedure.(page 9)

3. Leak spot: In the case of extension pipe and HBC controller (Heating season)

(1) Run all the indoor units in heating test run mode.

1) To run the indoor unit in test run mode, set SW4 (769) on the outdoor unit control board to ON.
2) Change the setting of the remote controller for all the indoor units to the heating mode.
3) Check that all the indoor units are performing a heating operation.

(2) Stop all the indoor units, and stop the compressor.

1) To stop all the indoor units and the compressors, turn SW4 (769) on the outdoor control board from ON to OFF.
2) Check that all the indoor units are stopped.

(3) Close the ball valves (BV1 and BV2).

(4) Extract any residual refrigerant in the extension pipes and HBC controller. Do not discharge refrigerant into air when it is collected.

(5) Repair the leak.

(6) After repairing the leak, evacuate the air from the extension pipes and HBC controller*1. Then, open the ball valves (BV1 and BV2), and operate the unit in the refrigerant charge adjust mode.

4. Leak spot: In the case of outdoor unit (Heating season)

1) Extract the refrigerant from the entire system (outdoor units, extension pipes, and HBC controller). Do not discharge refrigerant into the atmosphere when it is collected.
2) Repair the leak.
3) Repair the leak, and evacuate the air from the entire system *1 . Then, calculate the proper amount of refrigerant to be added (outdoor unit + extension pipe + HBC controller), and charge the system with that amount. Refer to Chapter VII [3] 3. for the proper amount of refrigerant charge.(page 95)

*1. Refer to Chapter I [8] Vacuum Drying (Evacuation) for detailed procedure.(page 9)

[6] Servicing the HBC controller

1. Valve block

VB3 (valve block) is driven by the pulse signal from the HBC controller control board and are controlled by a stepping motor.

1) HBC controller control board and valve block (VB3)

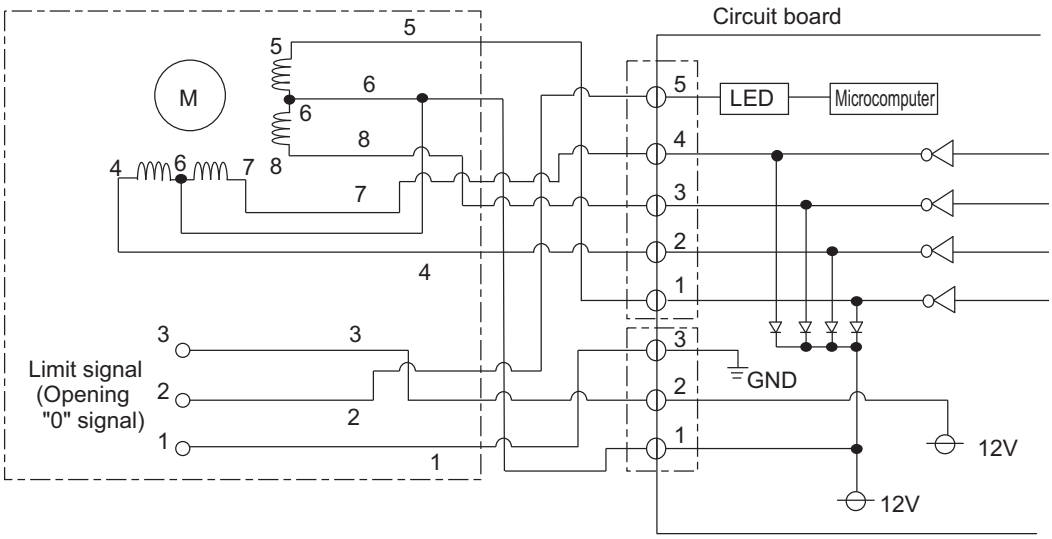

2) Pulse signal output and valve motion

Output (phase) number	Output status			
	1	2	3	4
4	ON	ON	OFF	OFF
5	OFF	ON	ON	OFF
7	OFF	OFF	ON	ON
8	ON	OFF	OFF	ON

When valve opens (0→C800 or H800): 4→3→2→1

When valve closes (C800 or H800→0): 1→2→3→4

- If the LEDs (VB3a-VB3p) on the control board are lit, check the relevant valve blocks for loose connectors and faulty wiring. Make sure that the valve blocks are properly controlling the refrigerant flow.
- If the LED is unlit, check all valve blocks for proper operation.
- If the problem persists after taking the above measures, replace the circuit board.

3) Opening and closing of the valve

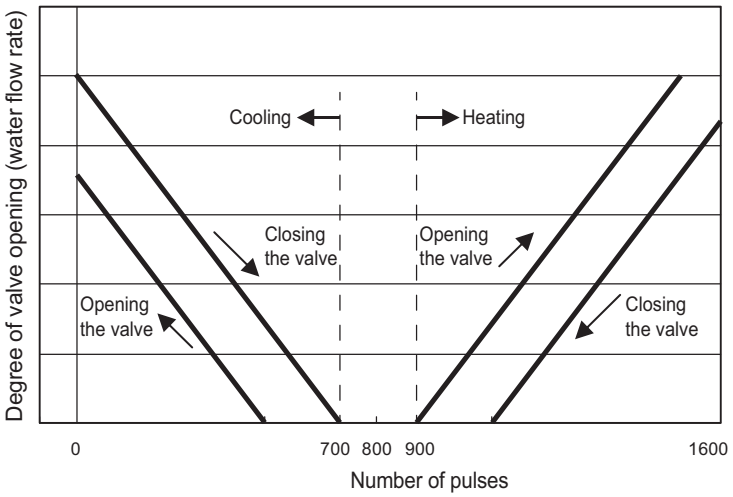

2. Water pump

Check the connector and make sure that it is connected properly.
Check the driving power supply, control power supply for the pumps internal board, and check the control signal voltage by connecting each voltage to ground. (Control signal voltage will be 0V when stopped and 6V when running at 100%)
If these are voltages are not correct then investigate the HBC controller pump power supply board.

If the supply voltages are correct, and the control signal is being sent and the pump will still not operate the likely causes are:

- Internal pump control board failure - replace pump. (Note: The internal pump control board is usually damaged when removing and replacing the connector with the power supply turned on. Always remove the pump connector with the power supply turned off.)
- Coil failure - replace pump. If the windings have been damaged the pump will require replacing.
- Internal mechanical failure such as bearing failure, turbine failure, magnet degradation. This will require pump replacement.

Before replacement the causes must be investigated and resolved. The pump shaft bearings and magnets can be easily damaged by overheating due to dry running or water system blockage. Check the strainer for blockage, investigate the water circuit for blockage and or foreign material, and that there is no air in the system or an uncontrolled leak.

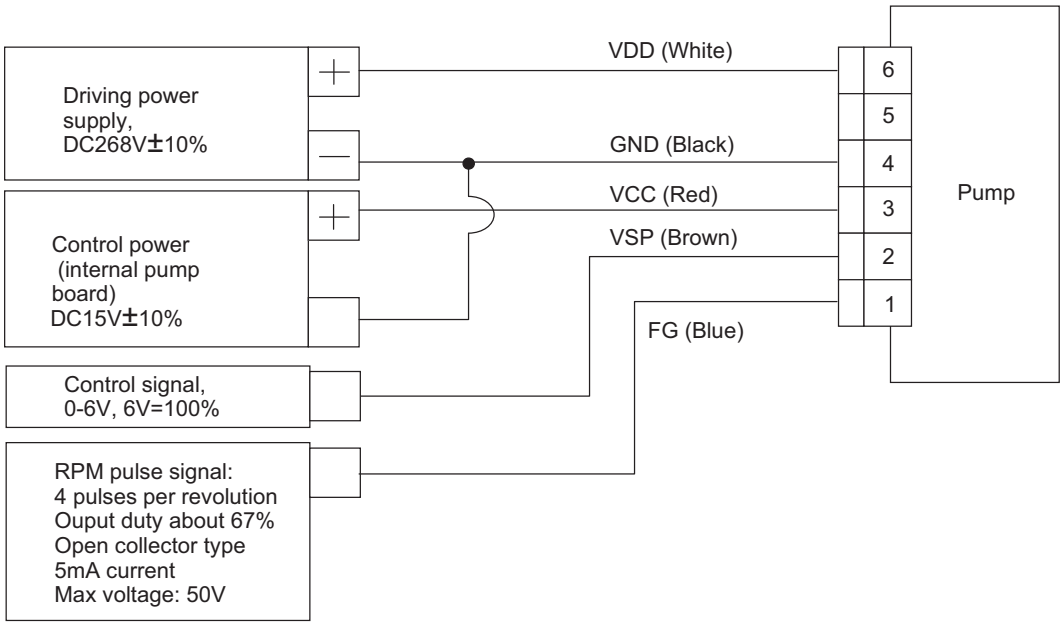

[7] Instructions for debris removal operation

This operation removes the debris that may have been introduced during installation from the water circuit.
Perform this operation **after completion of water- and refrigerant-piping work, air tightness test, evacuation of refrigerant circuits, refrigerant charging, and electrical work.**

1.Preparation for debris removal operation

1.Set DIP SW 5-1 (valve opening when stopped), DIP SW 5-2 (nullification of drain over-flow error for 9 hours) from off to on.

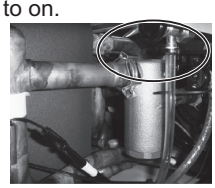

HBC controller

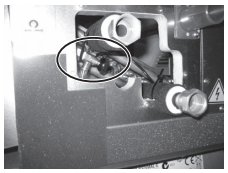

Indoor unit (Example: PEFY-WP-VMA-E)

2.Turn on the breaker, and then open the air vent valves on the HBC controller and the indoor units.
Refer to the Installation Manual for the location of air vent valves.
(If there are air vent valves on the field-installed pipes, open the valves as well.)

3.Supply water from the suction pipe on the HBC controller.

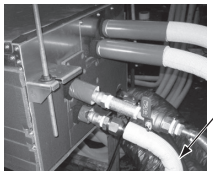

Install a non-return valve to prevent water in the water circuit flowing back to the water supply pipe, or remove the water supply hose after the air vent operation.

4.**Check that water comes from each air vent valve, and perform the debris removal operation.**

2.Debris removal operation

1.If there are a large amount of debris in the water in the field-installed pipes, set DIPSW4-1 from OFF to ON.
(Refer to the flowchart for debris removal operation for details.)
Perform the debris removal operation. (Each air vent valve should stay open.)

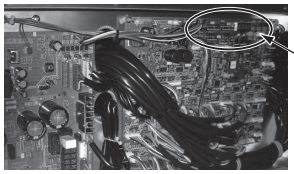

LED and DIPSW positions

2. Forty minutes after the completion of debris removal operation, the LED will indicate "Air0." The LED indication will change to "Air1," "Air2," and "AirE" in order. Then, the water pump will stop.

3.Stop the water supply, and check that no water is coming out of the air vent valves. Then, set the dipswitch 4-1 from ON to OFF.

4.Set DIP SW4-6 to on, and switch off the HBC controller. Open the air-vent valve and the water-vent valve.
Slowly open the strainer closest to the water supply to the HBC controller. (Note that if it is opened fast, water may blast out.) Remove the strainer, clean its inside, and refit it.

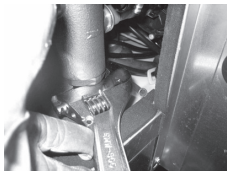

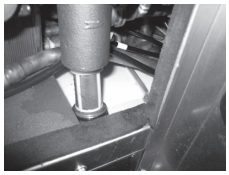

5.Slowly open the other strainer which is the furthest from the water supply.
(After the cleaning, set DIPSW4-6 to OFF.)

6.Make sure the strainers are re-installed.

Flowchart for debris removal operation (DIPSW4-1 is ON.)

Step 1 Intermittent operation of water pump (20 min) — The operation is performed while air is discharged from the water pipe. [Air1]

↓

Step 2 Operation of all indoor units (20 min) — Debris in the pipe will accumulate into the strainer by operating all indoor units. [Air2 to AirE]

(1)The operation can be forced to stop by setting DIPSW4-4 from OFF to ON.
(2)If it is found during any step that air ventilation has not been completed to the desired degree, start over at Step 2-1.

<General cautions>
(1)To avoid malfunction, do not connect or disconnect the power connector of the water pump being powered on.
(2)Check for water leaks from the field-installed pipe joint during operation.
(3)Do not pull the clip on the connection of the water pipe with pliers so that undue force is applied.
(4)If Error appears on the LED, turn off the breaker, turn it back on, and start over at step 2-1.

3.End processing

Set the dipswitches 5-1 and 5-2 to OFF after completion of debris removal operation.

[8] Instructions for the air vent operation

This operation removes the air that remains after water is supplied to the water circuit.
Perform this operation **after completion of water- and refrigerant-piping work, air tightness test, evacuation of refrigerant circuits, and refrigerant charging (and debris removal, if performed).**
* When main-HBC controllers are conected in parallel, please do not operate them at the same time.

1.Preparation for the air vent operation

1.Set DIP SW 5-1 (valve opening when stopped), DIP SW 5-2 (nullification of drain over-flow error for 9 hours) from off to on.

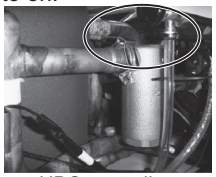
HBC controller

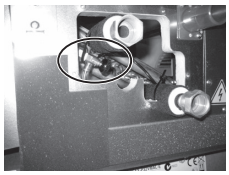
Indoor unit (Example: PEFY-WP-VMA-E)

2.Turn on the breaker, and then open the air vent valves on the HBC controller and the indoor units.
Refer to the Installation Manual for the location of air vent valves.
(If there are air vent valves on the field-installed pipes, open the valves as well.)

3.Supply water from the suction pipe on the HBC controller.

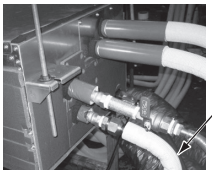
Install a non-return valve to prevent water in the water circuit flooding back to the water supply pipe, or remove the water supply hose after the air vent operation.

4.**Check that water comes from each air vent valve, and perform the air vent operation.**

2.Air vent operation

1.Set DIPSW4-3 from OFF to ON.
2.The LED will indicate "Air1" "Air2" "Air3" "Air4" and "AirE" in order over a period of up to 140~380 minutes, and after 140~380 minutes have passed, the water pump will stop.

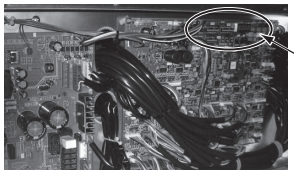
LED and DIPSW positions

3.Set the dipswitch 4-3 from ON to OFF.
4.Close the all air vent valves.
5.Stop the water supply.

3.Checking for the presence of residual air

1.Set DIPSW4-5 from OFF to ON, and operate the water pump.

2.If there is residual air in the circuit, it will be noisy. Check for water leaks from the pipe, and then, perform the air vent operation again.

Flowchart for air vent operation (DIPSW4-3 is ON.)

Step 1	Intermittent operation of water pump (20 min)	The operation is performed while air is discharged from the water pipe. [Air1]
Step 2	Operation of all indoor units (20 min)	The residual air will be roughly removed by operating all indoor units. [Air2]
Step 3	Operation of individual indoor unit (10 min per one branch)	The residual air will be removed by operating indoor units for each branch. [Air3]
Step 4	Heating operation of all indoor units (20 min)	The saturated air in the circulating water will be removed by performing heating operation for all indoor units and raising the temperature of the circulating water. [Air4 to AirE]

(1)The operation can be forced to stop by setting DIPSW4-4 from OFF to ON.
(2) If it is found during any step that air ventilation has not been completed to the desired degree, go back to Step 2-1.
(3)If Error appears on the LED, turn off the breaker, turn it back on, and start over at step 2-1.

4.End processing

Set the dipswitches 5-1 and 5-2 to OFF after completion of air vent operation.

[9] Instructions for the water pump replacement

1.After turning off the power to the HBC controller, replace the water pump. To stop the water flow from the indoor unit, perform the following DIPSW operations.
When replacing the water pump near the water supply port, set DIPSW4-6 to ON (DIPSW4-7 to OFF).
When replacing the other water pump, set DIPSW4-6 and DIPSW4-7 to ON.

2.Open the top panel and maintenance panel of the water pump to be replaced.

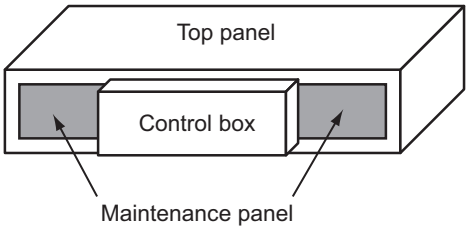

3.Remove the clips on the inlet/outlet of the water pump.

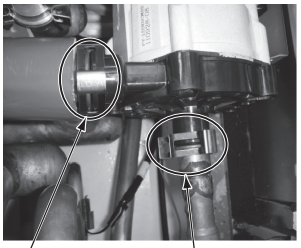

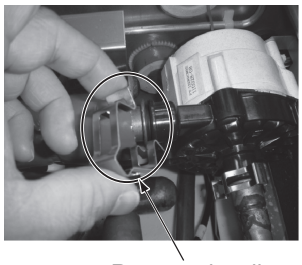

4.Remove the water pump by pulling out the inlet/outlet of the water pump.

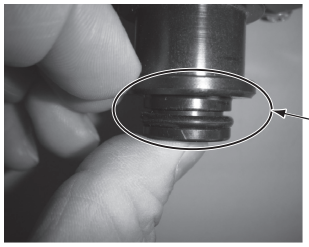

5.After removing the water pump, check the O-ring on the sleeve for damage. If O-ring is damaged, replace the O-ring with a new one.

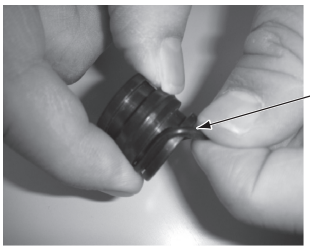

6.Insert the water pump again so that debris is not trapped in the O-ring, and install the clip.
When inserting the water pump, lubricate the O-ring with soapy water.

7.After closing the panels, turn on the power to the HBC controller, and perform the air vent operation.

Replacement procedures for each service part

1. Solenoid valve coil (SV1)

Operation procedures	Illustrations	Operation location
(1) Remove the four fixing screws from the service panel (right) and then remove the service panel (right). (2) Remove the two fixing screws from the service panel (top right) and then remove the service panel (top right). (3) Disconnect the corresponding solenoid valve coil connector from the control board. (4) Remove the control box and then remove the solenoid valve coil wires secured by clamps. (5) Remove one solenoid valve coil fixing screw from the top (indicated by direction of the arrow in the figure) and then remove the solenoid valve coil. (6) Remove the one fixing screw and then remove the solenoid valve fixing plate. (7) Install the new solenoid valve coil in the position indicated in the figure and then connect the connector to the control board.	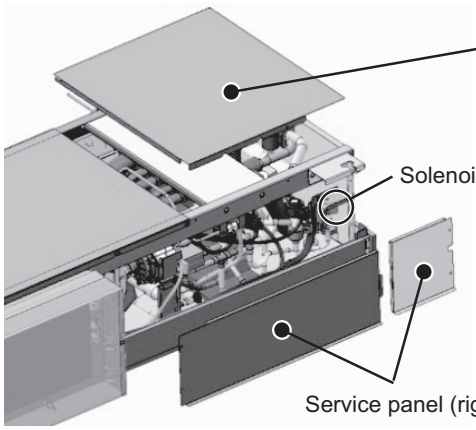 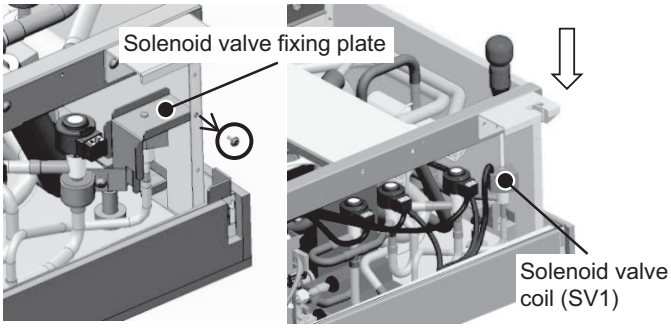	In ceiling space

2. 4-way valve coils (21S4Ma, 21S4Mb)

Operation procedures	Illustrations	Operation location
(1) Remove the four fixing screws from the service panel (right) and then remove the service panel (right). (2) Disconnect the corresponding solenoid valve coil connector from the control board. (3) Remove the two 4-way valve coil fixing screws from the front (indicated by direction of the arrow in the figure) and then remove two 4-way valve coils. (4) Remove the control box and then remove the 4-way valve coil wires secured by clamps. They are also secured to the solenoid valve coil wires with cable ties so remove the cable ties. (5) Install the new 4-way valve coils in the positions indicated in the figure and then connect the connectors to the control board. * Take care not to mix up the 4-way valve coils on the left and right when installing them.	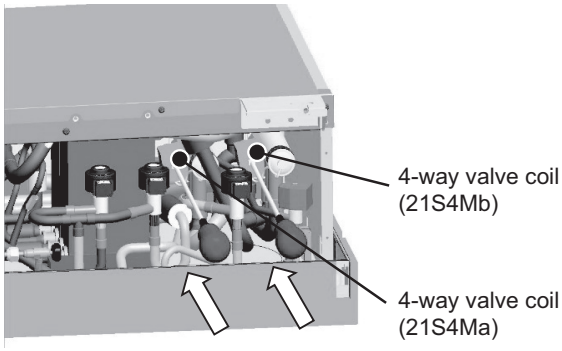	In ceiling space

3. LEV coils (LEV1, LEV2, LEV3)

Operation procedures	Illustrations	Operation location
(1) Remove four fixing screws from the service panel (right) and then remove the service panel (right). (2) Disconnect the corresponding LEV coil connectors from the control board. (3) Remove the control box and then remove the LEV coil wires secured by clamps and cable ties. (4) Rotate the LEV coils slightly and then remove them in the upward direction. (5) Install the new LEV coils in the positions indicated in the figure and then connect the connectors to the control board. ∗Take care not to mix up the three LEV coils when installing them. ∗Rotate the LEV coils until you hear them snap into place to attach them properly.	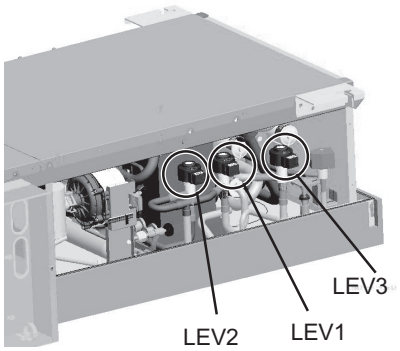	In ceiling space

4. Valve motor and valve body

Operation procedures	Illustrations	Operation location
(1) Perform the operation to drain the water from the system if necessary in accordance with the following. •When replacing only valve motor: Draining water from system not necessary •When replacing valve body: Draining water from system necessary (2) Remove the four fixing screws from the service panel (right) and then remove the service panel (right). (3) Remove the two fixing screws from the service panel (top left) and then remove the service panel (top left). (4) Disconnect the corresponding valve motor connector from the control board. (5) Remove the four control box fixing screws and then remove the control box. Disconnect each wire connector and then completely remove the control box. (6) Perform the removal operation in accordance with the following. •When replacing only valve motor: Remove the two fixing screw and then remove the valve motor. •When replacing valve body: Remove the motor as described above and then pull out the valve body in the direction of the arrow indicated in the figure.	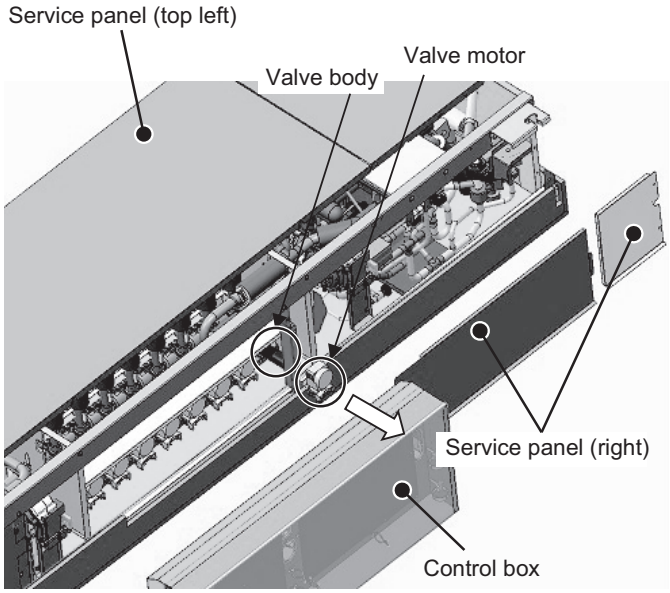	In ceiling space

5. Valve block

Operation procedures	Illustrations	Operation location
(1) Collect the refrigerant and water and then carry out the unit from the ceiling space. (2) Remove all of the service panels (top, front, and back). (3) Disconnect all connectors from the control board. (4) Remove the clips (figure below) connecting the pipes shown in the figure and then remove the T pipe in the upward direction. (① to ③ in the figure) 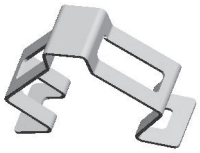 Clip (5) Remove the clips connecting the branch pipes and then remove the two branch pipes in the upward direction. (④ and ⑤ in the figure) (6) Remove the clips connecting the pipes shown in the figure. (⑥ to ⑧ in the figure) (7) Remove the 4-way valve fixing plate. (3 screws) (8) Remove the ten screws indicated by the arrows in the figure that are securing the front frame and back frame control box supporting plates. (9) Hold the lifting brackets and lift up the valve block assembly to remove it. (10) Remove all of the pipes from the valve block assembly.	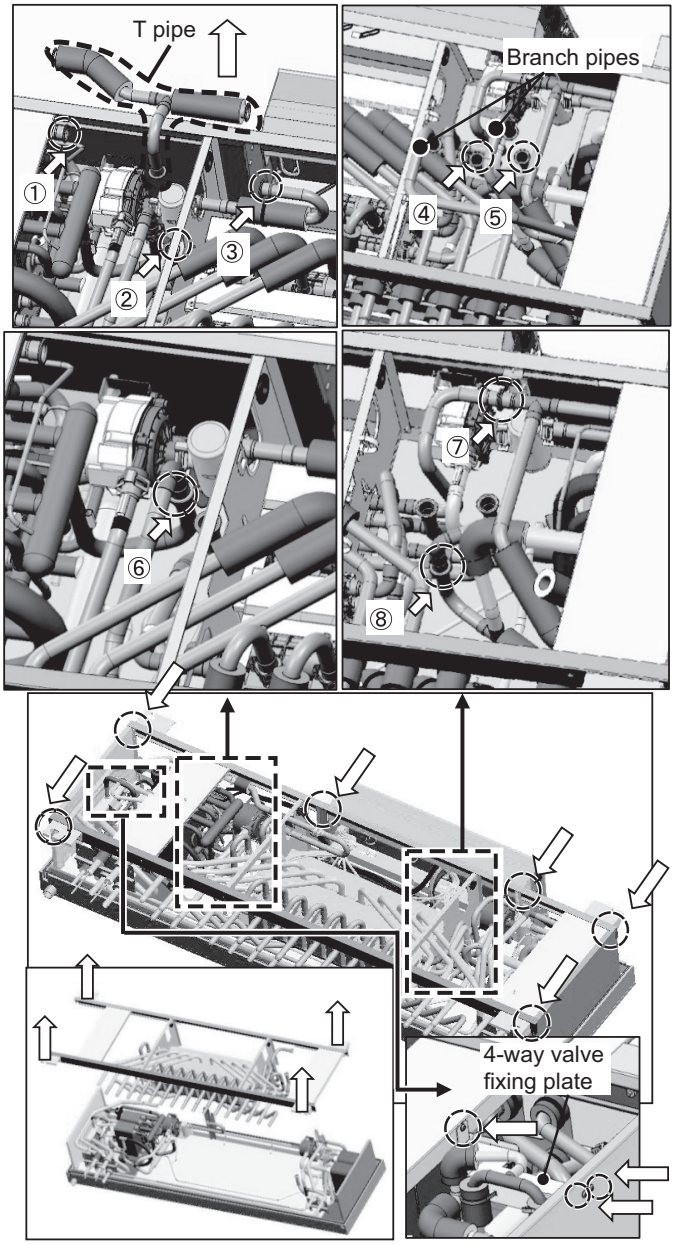 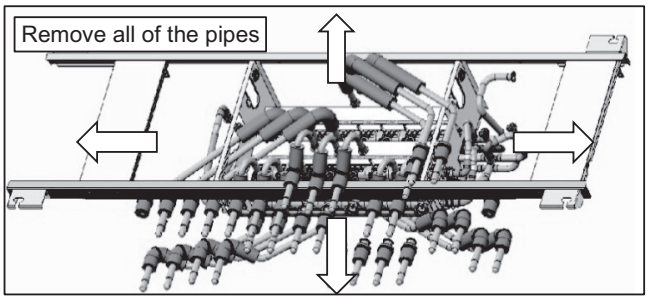	Below ceiling

Operation procedures	Illustrations	Operation location
(11) Remove the 8 fixing screws of the plates supporting the valve block shown in the figure. (12) Remove the 8 screws securing the valve block and then replace the valve block. *It is recommend to replace all nipples with new ones because damage to an O-ring attached to a nipple may cause water to leak during recovery after replacement of a valve block.	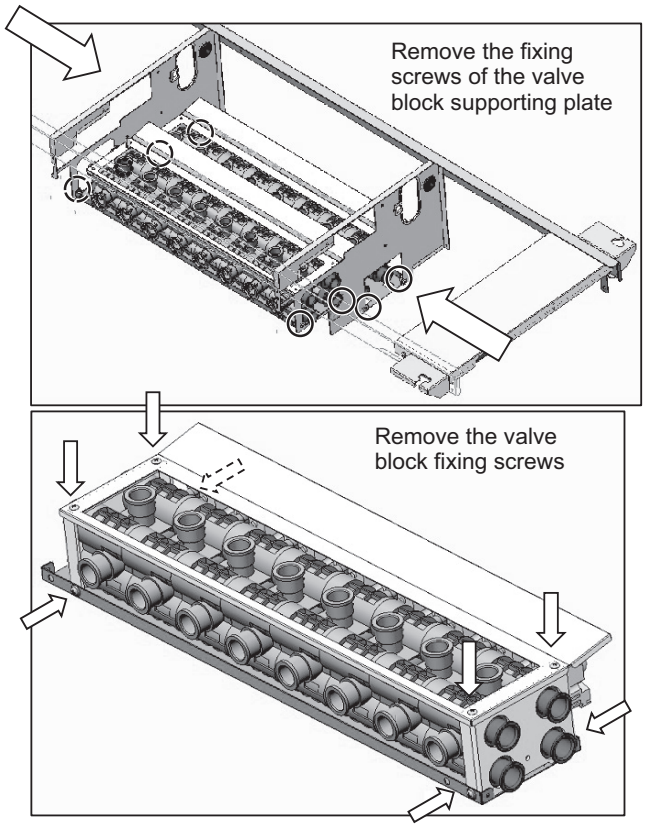	Below ceiling

6. Solenoid valve and LEV body

Operation procedures	Illustrations	Operation location
(1) Collect the refrigerant and water and then carry out the unit from the ceiling space. (2) Remove the four fixing screws from the service panel (right) and then remove the service panel (right). (3) Remove the two fixing screws from the service panel (top right) and then remove the service panel (top right). (4) Disconnect the corresponding valve coil connectors from the control board and also remove the coil from the valve. (For how to remove the coil, follow the operation procedures of 1.) (5) Remove the float switch and fixing plate from the drain pan (to prevent them from catching fire when the brazing is performed). Remove the two fixing screws from the direction of the arrow indicated in the figure. (6) Protect the heat insulation material around the corresponding valve to prevent it from burning. (7) Debraze the corresponding valve to remove it and then replace it.	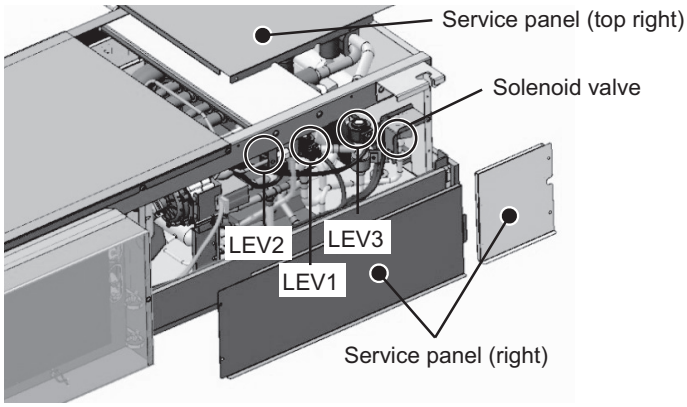 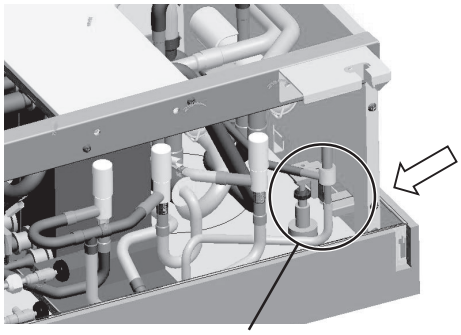 Float switch	Below ceiling

7. Strainer

Operation procedures	Illustrations	Operation location
(1) Unscrew the four fixing screws from the service panel on the right to remove it (when servicing the strainer on the Heating-main side water-pump). (2) Unscrew the four fixing screws from the service panel on the left to remove it (when servicing the strainer on the Cooling-main side water-pump).	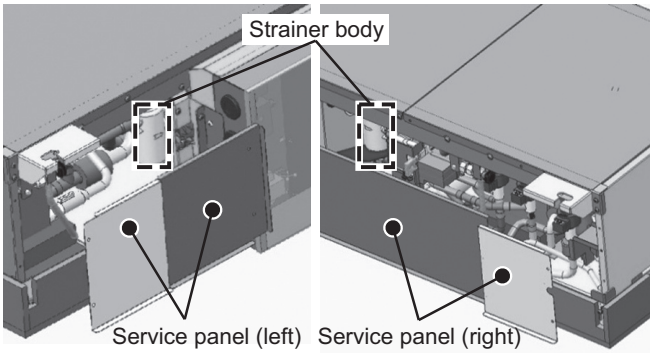	In ceiling space
(3) Unscrew the two screws on either side of the control box. (Applicable to TCMBM0108VA11N4 only)	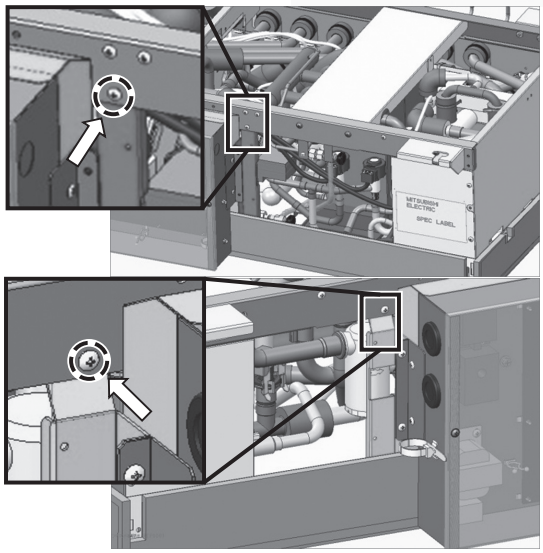	
(4) Slide the control box to the left until the strainer is visible (Approx. 150 mm). (Applicable to TCMBM0108VA11N4 only)	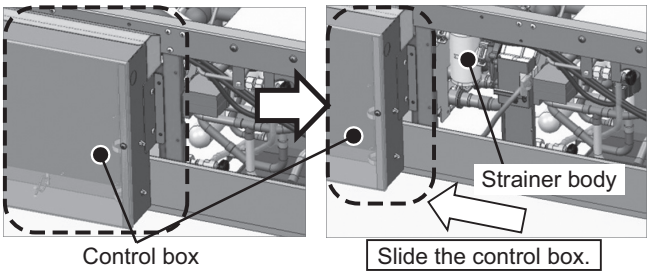	
(5) Using the supplied spanner plate, open the cover at the bottom of the strainer. (6) Pull out the strainer downward, and replace it. *Fully tighten the cover at the bottom of the strainer. Failing to do so may cause a water leakage.	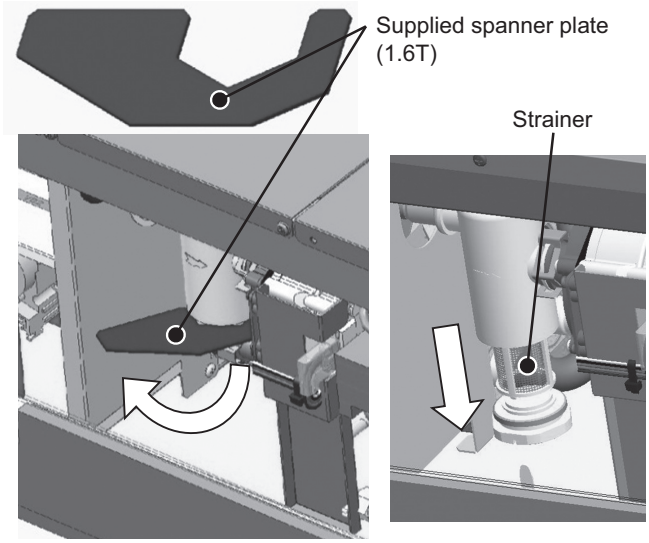	

8. Pump (right side of control box)

Operation procedures	Illustrations	Operation location
(1) Remove the four fixing screws from the service panel (right) and then remove the service panel (right). (2) Remove the two fixing screws from the service panel (top left) and then remove the service panel (top left). (3) Disconnect the pump connector. ∗Do not disconnect and connect the pump connector while the power is on. Doing so may cause a failure.	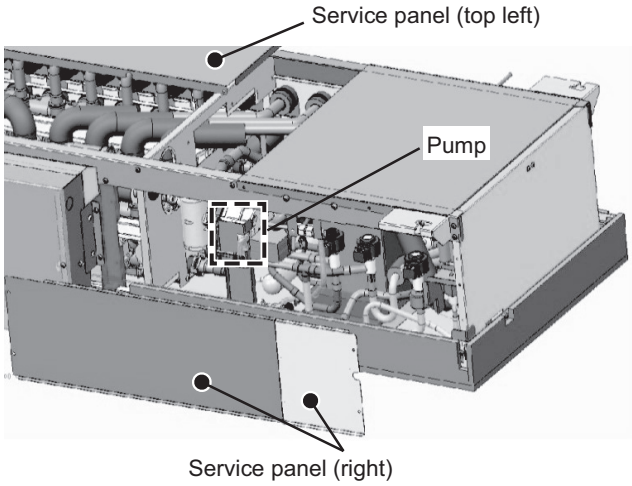	In ceiling space
(4) Remove the control box and then remove the pump and float switch wires secured by clamps. (5) Remove the two clips connecting the pump and pipes and then move the pipes by hand in the direction indicated by the arrow in the figure.	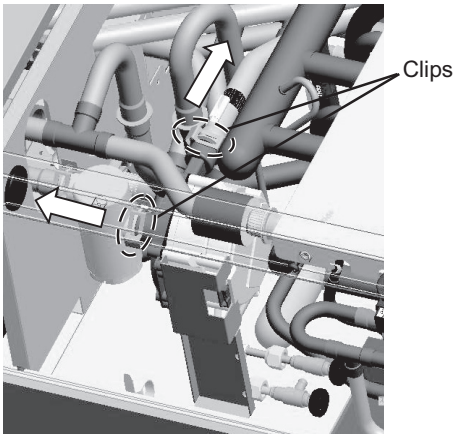	
(6) Remove the two screws securing the drain pan and then remove the drain pan. ∗If you have a screwdriver with a handle that is 100 mm or less, there is no need to remove the drain pan.	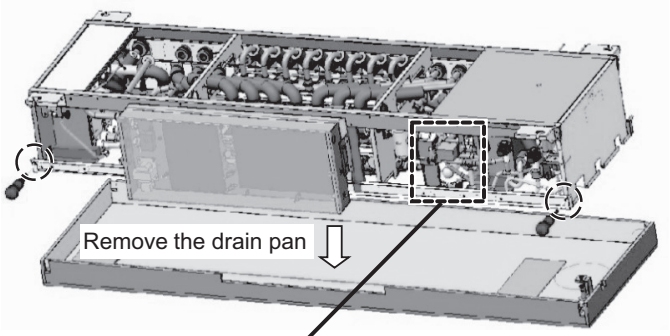	
(7) Remove the two fixing screws of the pump fixing plate and then remove the pump and plate. (8) Remove the two screws securing the pump and plate from the side (direction of arrow) and then replace the pump.	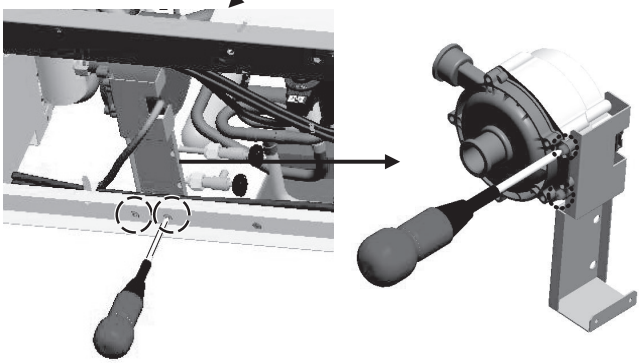	

9. Pump (left side of control box)

Operation procedures	Illustrations	Operation location
(1) Remove the four fixing screws from the service panel (left) and then remove the service panel (left). (2) Remove the two fixing screws from the service panel (top left) and then remove the service panel (top left). (3) Disconnect the pump connector. ∗Do not disconnect and connect the pump connector while the power is on. Doing so may cause a failure.	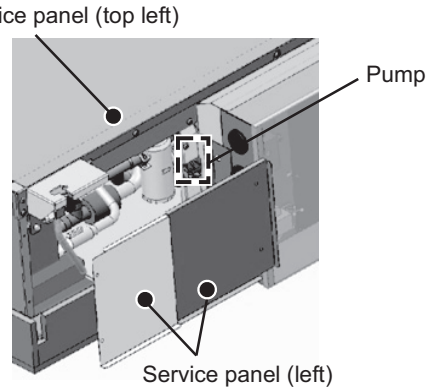	In ceiling space
(4) Remove the two clips connecting the pump and pipes and then move the pipes by hand in the direction indicated by the arrow in the figure.	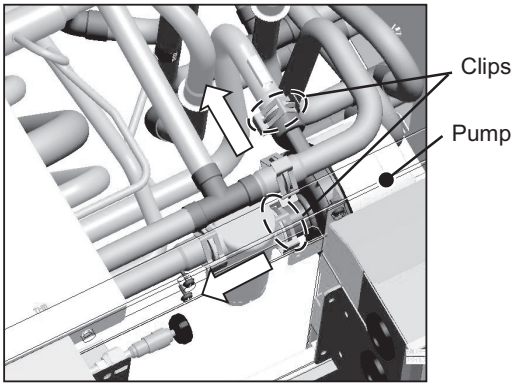	
(5) Remove the control box and then remove the pump wires secured by clamps. (6) Remove the one control box fixing screw and then remove the control box fixing plate. (7) Remove the two screws securing the pump and plate from the side (direction of arrow) and then replace the pump.	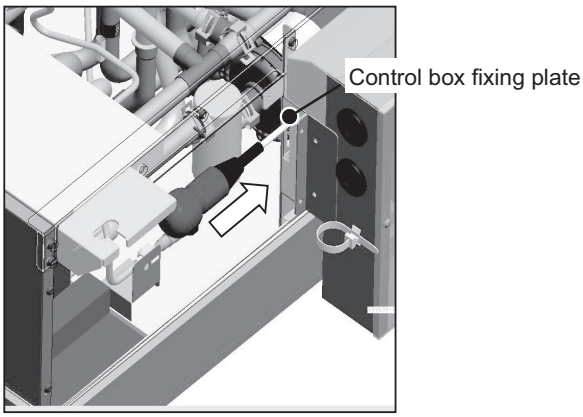	

10. Thermistor (TH31)

Operation procedures	Illustrations	Operation location
(1) Remove the two fixing screws from the service panel (top right) and then remove the service panel (top right). (2) Remove the two fixing screws from the service panel (top left) and then remove the service panel (top left). (3) Disconnect all TH31 connectors from the control board. (4) Remove the four control box fixing screws and then remove the control box. (5) Remove the thermistor (TH34). <Refer to 11.> (Because of same connector as TH31) (6) Pull out TH31 from the top of the unit and then replace it.	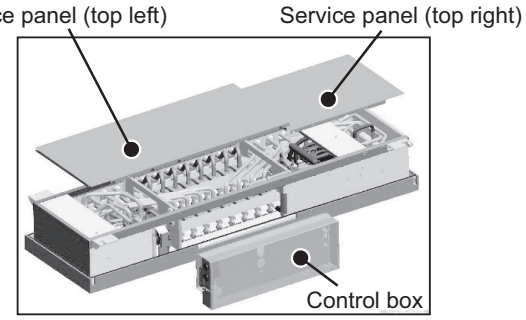 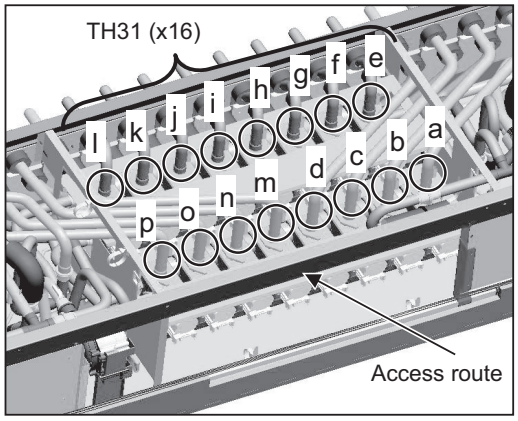	In ceiling space

11. Thermistors (TH12, TH14, TH15, and TH34)

Operation procedures	Illustrations	Operation location
(1) Disconnect the connectors of the thermistor to be replaced from the control board. (2) Remove the four fixing screws from the service panel (right) and then remove the service panel (right). (3) Remove the thermistor from the front of the unit and then replace it. (4) Remove the control box and then remove the thermistor wires secured by clamps. (5) In the case of TH12, also remove TH11. In the case of TH14, also remove TH13. In the case of TH15, also remove TH16. In the case of TH34, also remove TH31i and TH31j. (Because of same connector as corresponding thermistor) <Refer to 10.>	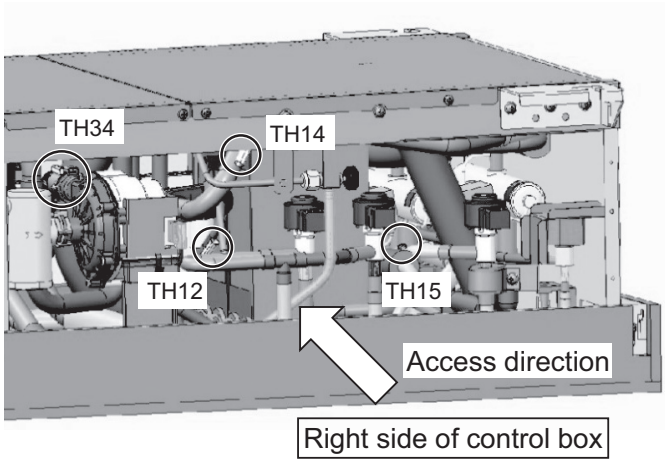	In ceiling space

12. Thermistors (TH11, TH13, TH32, and TH35)

Operation procedures	Illustrations	Operation location
(1) Disconnect the connectors of the thermistor to be replaced from the control board. (2) Remove the four fixing screws from the service panel (left) and then remove the service panel (left). (3) Remove the thermistor from the front of the unit and then replace it. (4) Remove the control box and then remove the thermistor wires secured by clamps. (5) In the case of TH11, also remove TH12. In the case of TH13, also remove TH14. In the case of TH32, also remove TH33. In the case of TH35, also remove TH31k and TH31l. (Because of same connector as corresponding thermistor) <Refer to 10.>	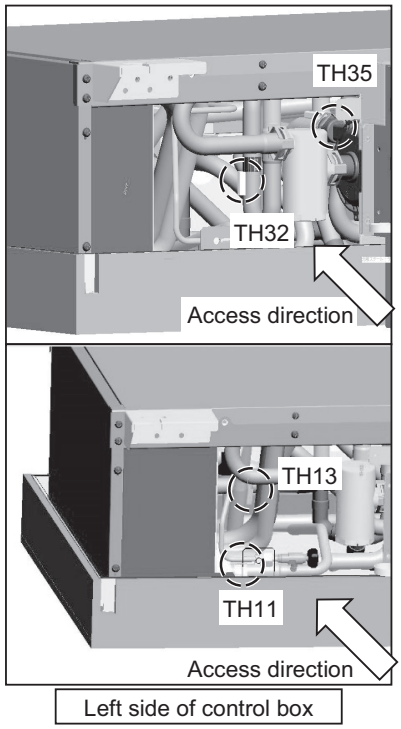	In ceiling space

13. Thermistors (TH16 and TH33)

Operation procedures	Illustrations	Operation location
(1) Disconnect the connectors of the thermistor to be replaced from the control board. (2) Remove the four fixing screws from the service panel (right) and then remove the service panel (right). (3) Remove the two fixing screws from the service panel (top right) and then remove the service panel (top right). (4) Remove the thermistor from the top of the unit and then replace it. (5) Remove the control box and then remove the thermistor wires secured by clamps. (6) In the case of TH16, also remove TH15. In the case of TH33, also remove TH32. (Because of same connector as corresponding thermistor) <Refer to 10.>	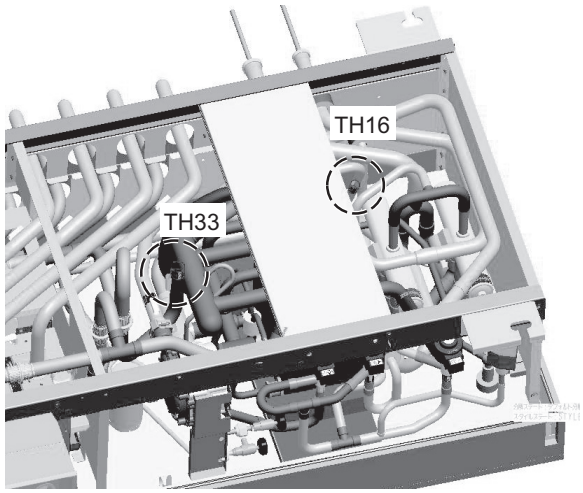	In ceiling space

14. 4-way valve body (21S4)

Operation procedures	Illustrations	Operation location
(1) 1.Perform the operation as described in (1) to (8) of 5. (2) Debraze the three places indicated in the figure and then replace the 4-way valve with a service part. When brazing, protect the heat insulation material to prevent it from burning. 4- way valve service part	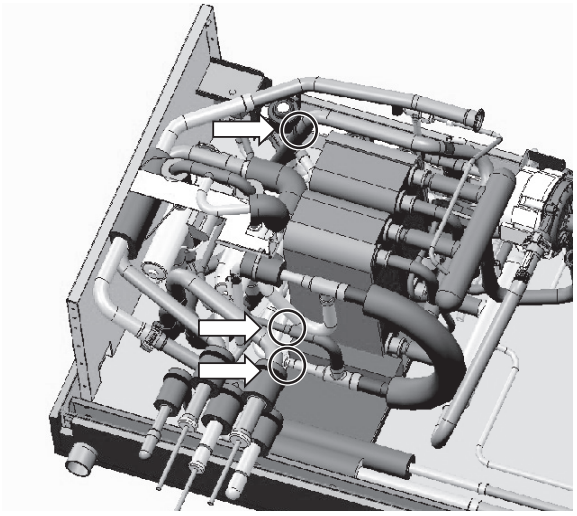	Below ceiling

15. Plate heat exchanger (cooling-main side)

Operation procedures	Illustrations	Operation location
(1) Perform the work as described in (1) to (8) of 5. (2) Remove the two flare nuts of the water purge valve and air purge valve. (① and ② in the figure) (3) Debraze the three places indicated in the figure and then replace the plate heat exchanger with a service part. (③, ④, and ⑤ in the figure) 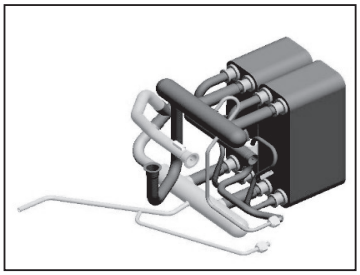 Plate heat exchanger (cooling-main side) service part	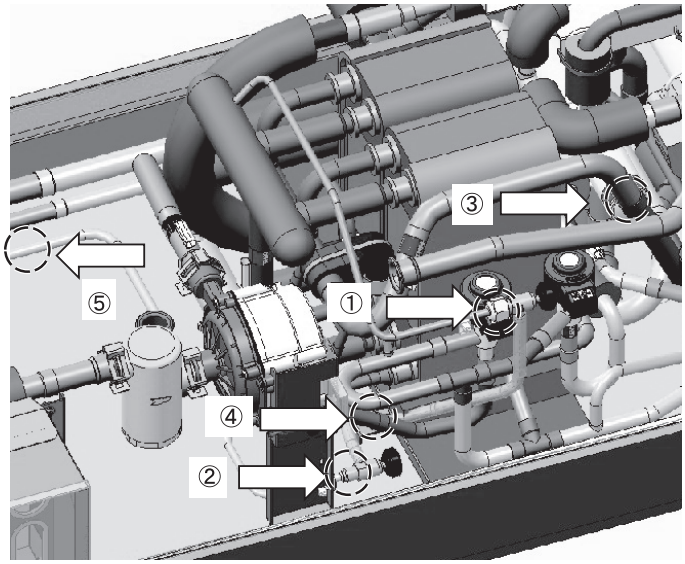	Below ceiling

16. Plate heat exchanger (heating-main side)

Operation procedures	Illustrations	Operation location
(1) Perform the work as described in (1) to (8) of 5. (2) Remove the clips connecting the pipes in the two places shown in the figure and then remove the branch pipes in the upward direction. (① and ② in the figure) (3) Remove the one flare nut of the air purge valve. (③ in the figure) (4) Debraze the three places indicated in the figure and then replace the plate heat exchanger with a service part. (④, ⑤, and ⑥ in the figure) 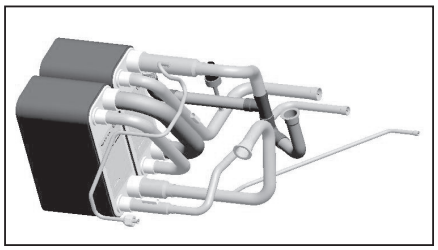 Plate heat exchanger (heating-main side) service part	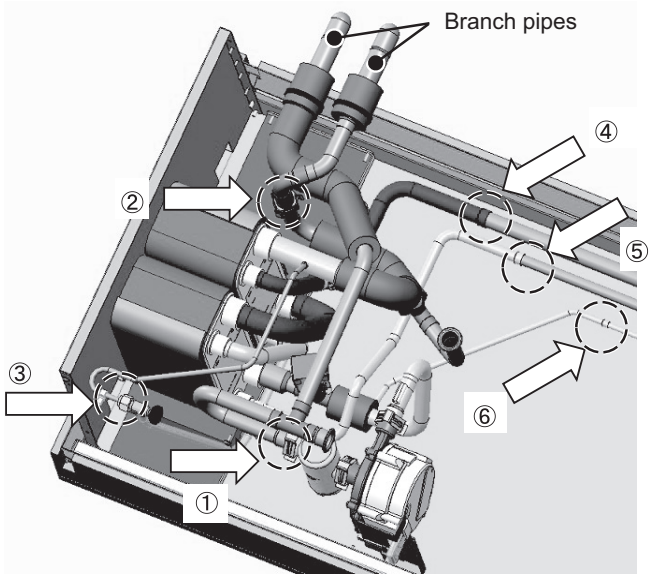	Below ceiling

17. Pressure sensor

Operation procedures	Illustrations	Operation location
(1) Perform the work as described in (1) to (8) of 5. (2) Remove the clips connecting the pipes in the two places shown in the figure and then remove the branch pipes in the upward direction. (① and ② in the figure) (3) Debraze the brazed portion of the pressure sensor indicated in the figure and then replace the pressure sensor with a service part. (③ in the figure) *Protect the heat insulation material around the pressure sensor so as not to burn it with the flame of the torch.	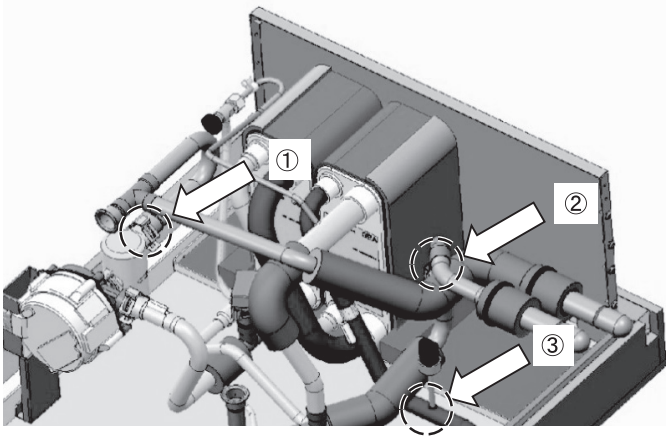	Below ceiling

18. Pressure sensor (PS3)

Operation procedures	Illustrations	Operation location
(1) Perform the work as described in (1) to (8) of 5. (2) Cut the cable ties securing the heat insulation material indicated in the figure and then remove the heat insulation material. (3) Debraze the brazed portion of the pressure sensor indicated in the figure and then replace the pressure sensor with a service part. (① in the figure) *Protect the heat insulation material around the pressure sensor so as not to burn it with the flame of the torch.	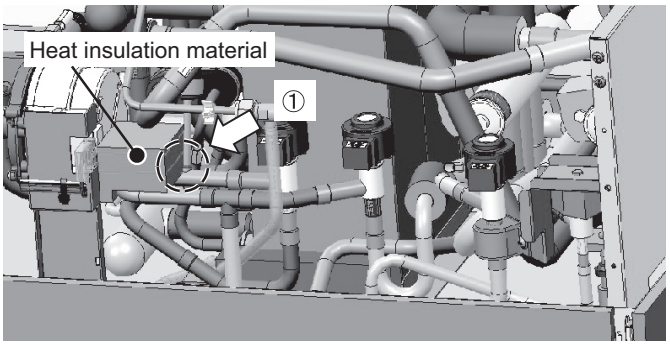	Below ceiling

19. Strainer in front of 4-way valve

Operation procedures	Illustrations	Operation location
(1) Collect the refrigerant and water and then carry out the unit from the ceiling space. (2) Remove the four fixing screws from the service panel (right) and then remove the service panel (right). (3) Remove the two fixing screws from the service panel (top right) and then remove the service panel (top right). (4) Disconnect the 4-way valve coil connector from the control board. (5) Remove the one 4-way valve coil fixing screw from the front (indicated by direction of the arrow in the figure) and then remove the 4-way valve coil so as not to burn the wires with the brazing flame. (6) Debraze the positions indicated in the figure, remove the strainer inside the pipe, and then replace it with a service part.	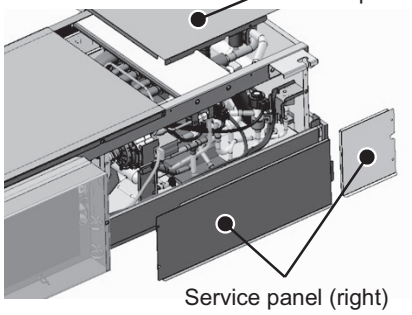 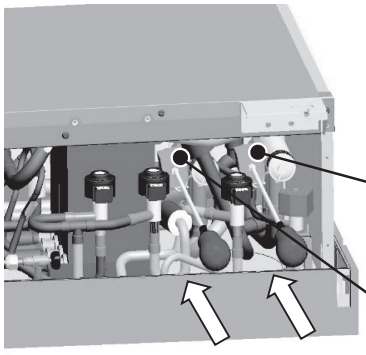 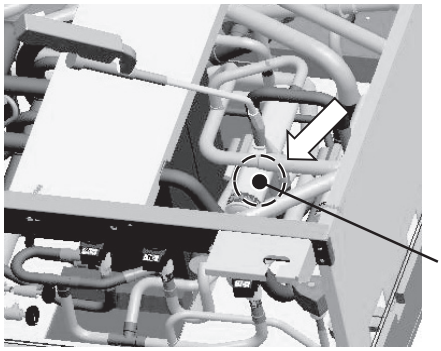	Below ceiling

20. Water pressure protection valve

Operation procedures	Illustrations	Operation location
(1) Remove the two fixing screws from the service panel (top left) and then remove the service panel (top left). (2) Remove the cover above the water pressure protection valve (① in the figure) in the upward direction from the top. Then remove the clip toward the front (② in the figure). Remove the water pressure protection valve (③ in the figure) upward and replace it with a service part.	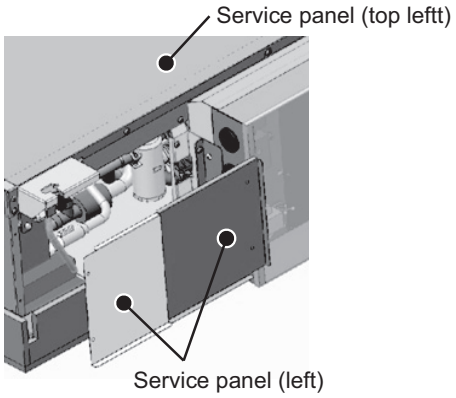 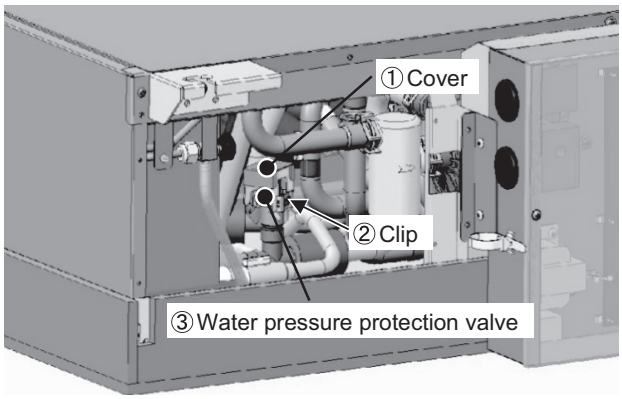	In ceiling space

21. Water purge valve and air purge valve

Operation procedures	Illustrations	Operation location
(1) Remove the four fixing screws from the service panel (right) and then remove the service panel (right). (2) Remove the four fixing screws from the service panel (left) and then remove the service panel (left). (3) Cut the cable ties securing the PVC tubes and plates. (4) Remove the clamps securing the pipes of the air purge valve and water purge valve from the plates. (5) Loosen the flare nuts with a spanner and then replace the valves with service parts. (6) Secure the PVC tubes to the plates in their original position. ∗To prevent rough movement when the valves are opened. (7) Perform the air purge operation. Water purge valve and air purge valve service parts	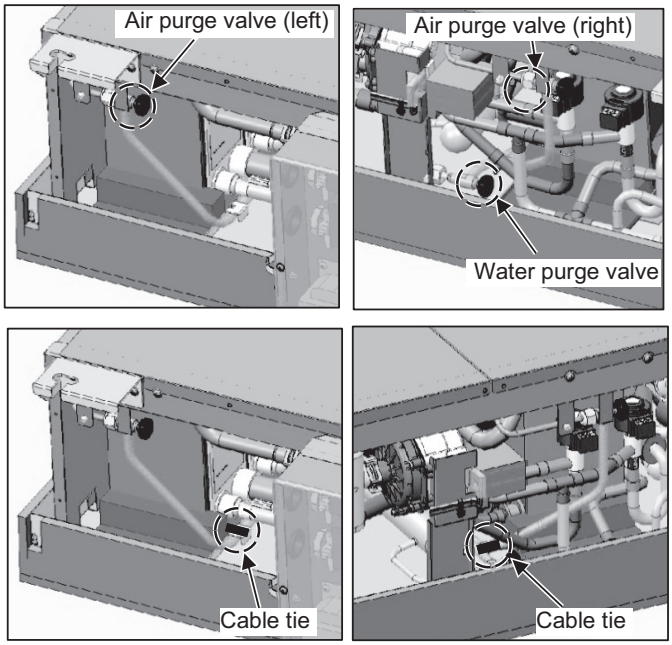	In ceiling space

Ⅸ LED Monitor Display on the Outdoor Unit Board

[1] How to Read the LED on the Service Monitor 191

[1] How to Read the LED on the Service Monitor

-1- Outdoor unit board

1. How to Read the LED

By setting the DIP SW 4-1 through 4-10 (Set SW6-10 to OFF.)(Switch number 10 is represented by 0), the operating condition of the unit can be monitored on the service monitor. (Refer to the table on page 81 for DIP SW settings.)
The service monitor uses 4-digit 7-segment LED to display numerical values and other types of information.

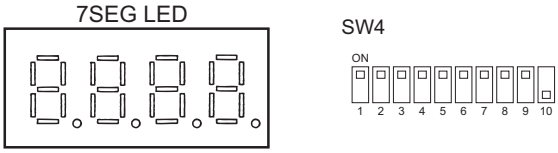

♦In the example above, 1 through 9 are set to ON, and 10 is set to OFF.

Pressure and temperature are examples of numerical values, and operating conditions and the on-off status of solenoid valve are examples of flag display.

1) Display of numerical values

Example: When the pressure data sensor reads 18.8kg/cm^2 (Item No. 58)

♦The unit of pressure is in kg/cm^2

♦ Use the following conversion formula to convert the displayed value into a value in SI unit.

Value in SI unit (MPa) = Displayed value (kg/cm^2) x 0.098

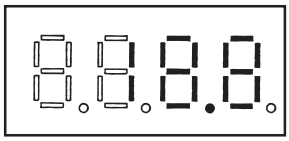

2) Flag display

Example: When 21S4a, 21S4b, SV1a are ON. (Item No. 3)

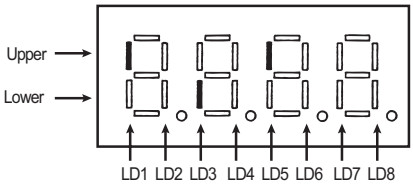

Example: 3-minutes restart mode (Item No. 14)

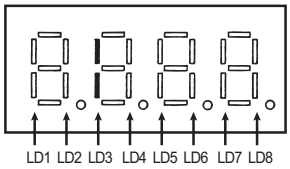

2. Initial LED Display

From power on until the completion of initial settings, the following information will be displayed on the monitor screen. (Displays No. 1 through No. 4 in order repeatedly.)

No	Item	Display	Remarks
1	Software version	0103	[0103] : Version 1.03
2	Refrigerant type	410	[410] : R410A
3	Model and capacity	H-20	[H-20] : Cooling/Heating 20 HP For the first few minutes after power on, the capacity of each outdoor unit is displayed. Thereafter, the combined capacity is displayed.
4	Communication address	51	[51] : Address 51

After the initial settings have been completed, the information on these items can be checked by making the switch setting that corresponds to No. 517 in the LED display table.

Note

Only item No. 1 "Software Version" appears on the display if there is a wiring failure between the control board and the transmission line power supply board or if the circuit board has failed. LED may not light up at all.

3. Clock Memory Function

The outdoor unit has a simple clock function that enables the unit to calculate the current time with an internal timer by receiving the time set by the system controller, such as AG-150A.
If an error (including a preliminary error) occurs, the error history data and the error detection time are stored into the service memory.
The error detection time stored in the service memory and the current time can be seen on the service LED.

Note

1) Use the time displayed on the service LED as a reference.
2) The date and the time are set to "00" by default. If a system controller that sets the time, such as AG-150A is not connected, the elapsed time and days since the first power on will be displayed.
   If the time set on a system controller is received, the count will start from the set date and the time.
3) The time is not updated while the power of the indoor unit is turned off. When the power is turned off and then on again, the count will resume from the time before the power was turned off. Thus, the time that differs the actual time will be displayed. (This also applies when a power failure occurs.)
   The system controller, such as AG-150A, adjusts the time once a day. When the system controller is connected, the time will be automatically updated to the correct current time after the time set by the system controller is received. (The data stored into the memory before the set time is received will not be updated.)

(1) Reading the time data:

1) Time display
   Example: 12 past 9

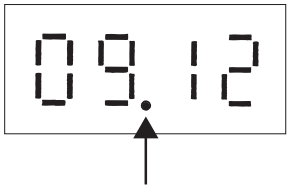

* Disappears if the time data is deviated due to a power failure, or if a system controller that sets the time is not connected.

2) Date display
   ♦When the main controller that can set the time is connected
   Example: May 10, 2003

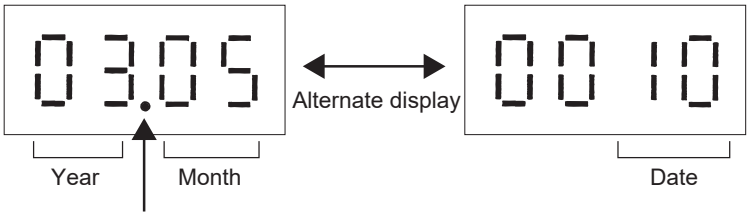

* Appears between the year and the month, and nothing appears when the date is displayed.

♦When the main controller that can set the time is not connected
Example: 52 days after power was turned on

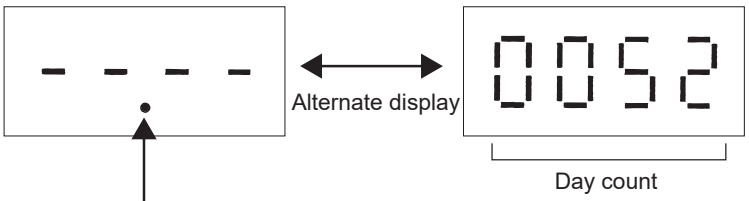

* Appears between the year and the month, and nothing appears when the date is displayed.

-2- HBC controller/Sub-HBC controller board

1. How to read the LED

The operation status of the unit can be monitored on the service monitor.
The service monitor uses 4-digit 7-segment LED to display flags.
There are no check items using dipswitch settings.

7SEG LED

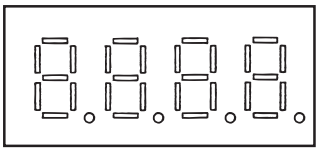

LD1: Pump in operation
LD2: DIP SW 5-4 ON
LD3: DIP SW 5-5 ON
LD5: 72C
LD7: HB
LD8: Microcomputer in operation

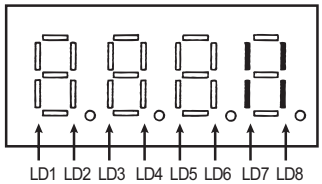

2. LED display at initial setting

From power on until the completion of initial settings, the following information will be displayed on the monitor screen.
(Displays No. 1 through No. 4 in order repeatedly.)

No	Item	Display	Remarks
1	Software version	0228	[0228] : Version 2.28
2	-		[ ] : Turning off the light
3	Model and capacity	GA	[GA] : HBC controller [Gb] : Sub-HBC controller
4	Communication address	52	[52] : Address 52

Note

Only item No. 1 "Software Version" appears on the display if there is a wiring failure between the control board and the transmission line power supply board or if the circuit board has failed.

Refer to the Service Handbook of the respective outdoor unit for information about items No. 0 through No. 407.

Data on indoor unit system

No.	SW4 (SW6-9: OFF, SW6-10: OFF)	Item	Display								Remarks
	1234567890		LD1	LD2	LD3	LD4	LD5	LD6	LD7	LD8	
408	0001100110	IC1 Suction temperature	-99.9 to 999.9								The unit is [°C]
409	1001100110	IC2 Suction temperature	-99.9 to 999.9								
410	0101100110	IC3 Suction temperature	-99.9 to 999.9								
411	1101100110	IC4 Suction temperature	-99.9 to 999.9								
412	0011100110	IC5 Suction temperature	-99.9 to 999.9								
413	1011100110	IC6 Suction temperature	-99.9 to 999.9								
414	0111100110	IC7 Suction temperature	-99.9 to 999.9								
415	1111100110	IC8 Suction temperature	-99.9 to 999.9								
416	0000010110	IC9 Suction temperature	-99.9 to 999.9								
417	1000010110	IC10 Suction temperature	-99.9 to 999.9								
418	0100010110	IC11 Suction temperature	-99.9 to 999.9								
419	1100010110	IC12 Suction temperature	-99.9 to 999.9								
420	0010010110	IC13 Suction temperature	-99.9 to 999.9								
421	1010010110	IC14 Suction temperature	-99.9 to 999.9								
422	0110010110	IC15 Suction temperature	-99.9 to 999.9								
423	1110010110	IC16 Suction temperature	-99.9 to 999.9								
424	0001010110	IC17 Suction temperature	-99.9 to 999.9								
425	1001010110	IC18 Suction temperature	-99.9 to 999.9								
426	0101010110	IC19 Suction temperature	-99.9 to 999.9								
427	1101010110	IC20 Suction temperature	-99.9 to 999.9								
428	0011010110	IC21 Suction temperature	-99.9 to 999.9								
429	1011010110	IC22 Suction temperature	-99.9 to 999.9								
430	0111010110	IC23 Suction temperature	-99.9 to 999.9								
431	1111010110	IC24 Suction temperature	-99.9 to 999.9								
432	0000110110	IC25 Suction temperature	-99.9 to 999.9								
433	1000110110	IC26 Suction temperature	-99.9 to 999.9								
434	0100110110	IC27 Suction temperature	-99.9 to 999.9								
435	1100110110	IC28 Suction temperature	-99.9 to 999.9								
436	0010110110	IC29 Suction temperature	-99.9 to 999.9								

Data on indoor unit system

No.	SW4 (SW6-9: OFF, SW6-10: OFF)	Item	Display								Remarks
	1234567890		LD1	LD2	LD3	LD4	LD5	LD6	LD7	LD8	
437	1010110110	IC30 Suction temperature	-99.9 to 999.9								The unit is [°C]
438	0110110110	IC31 Suction temperature	-99.9 to 999.9								
439	1110110110	IC32 Suction temperature	-99.9 to 999.9								
440	0001110110	IC33 Suction temperature	-99.9 to 999.9								
441	1001110110	IC34 Suction temperature	-99.9 to 999.9								
442	0101110110	IC35 Suction temperature	-99.9 to 999.9								
443	1101110110	IC36 Suction temperature	-99.9 to 999.9								
444	0011110110	IC37 Suction temperature	-99.9 to 999.9								
445	1011110110	IC38 Suction temperature	-99.9 to 999.9								
446	0111110110	IC39 Suction temperature	-99.9 to 999.9								
447	1111110110	IC40 Suction temperature	-99.9 to 999.9								
448	0000001110	IC41 Suction temperature	-99.9 to 999.9								
449	1000001110	IC42 Suction temperature	-99.9 to 999.9								
450	0100001110	IC43 Suction temperature	-99.9 to 999.9								
451	1100001110	IC44 Suction temperature	-99.9 to 999.9								
452	0010001110	IC45 Suction temperature	-99.9 to 999.9								
453	1010001110	IC46 Suction temperature	-99.9 to 999.9								
454	0110001110	IC47 Suction temperature	-99.9 to 999.9								
455	1110001110	IC48 Suction temperature	-99.9 to 999.9								
456	0001001110	IC49Suction temperature	-99.9 to 999.9								
457	1001001110	IC50 Suction temperature	-99.9 to 999.9								
458	0101001110	IC1 Water pipe inlet temperature	-99.9 to 999.9								The unit is [°C]
459	1101001110	IC2 Water pipe inlet temperature	-99.9 to 999.9								
460	0011001110	IC3 Water pipe inlet temperature	-99.9 to 999.9								
461	1011001110	IC4 Water pipe inlet temperature	-99.9 to 999.9								
462	0111001110	IC5 Water pipe inlet temperature	-99.9 to 999.9								
463	1111001110	IC6 Water pipe inlet temperature	-99.9 to 999.9								
464	0000101110	IC7 Water pipe inlet temperature	-99.9 to 999.9								
465	1000101110	IC8 Water pipe inlet temperature	-99.9 to 999.9								
466	0100101110	IC9 Water pipe inlet temperature	-99.9 to 999.9								
467	1100101110	IC10 Water pipe inlet temperature	-99.9 to 999.9								
468	0010101110	IC11 Water pipe inlet temperature	-99.9 to 999.9								
469	1010101110	IC12 Water pipe inlet temperature	-99.9 to 999.9								
470	0110101110	IC13 Water pipe inlet temperature	-99.9 to 999.9								
471	1110101110	IC14 Water pipe inlet temperature	-99.9 to 999.9								
472	0001101110	IC15 Water pipe inlet temperature	-99.9 to 999.9								
473	1001101110	IC16 Water pipe inlet temperature	-99.9 to 999.9								
474	0101101110	IC17 Water pipe inlet temperature	-99.9 to 999.9								
475	1101101110	IC18 Water pipe inlet temperature	-99.9 to 999.9								

Data on indoor unit system

No.	SW4 (SW6-9: OFF, SW6-10: OFF)	Item	Display								Remarks
	1234567890		LD1	LD2	LD3	LD4	LD5	LD6	LD7	LD8	
476	0011101110	IC19 Water pipe inlet temperature	-99.9 to 999.9								The unit is [°C]
477	1011101110	IC20 Water pipe inlet temperature	-99.9 to 999.9								
478	0111101110	IC21 Water pipe inlet temperature	-99.9 to 999.9								
479	1111101110	IC22 Water pipe inlet temperature	-99.9 to 999.9								
480	0000011110	IC23 Water pipe inlet temperature	-99.9 to 999.9								
481	1000011110	IC24 Water pipe inlet temperature	-99.9 to 999.9								
482	0100011110	IC25 Water pipe inlet temperature	-99.9 to 999.9								
483	1100011110	IC26 Water pipe inlet temperature	-99.9 to 999.9								
484	0010011110	IC27 Water pipe inlet temperature	-99.9 to 999.9								
485	1010011110	IC28 Water pipe inlet temperature	-99.9 to 999.9								
486	0110011110	IC29 Water pipe inlet temperature	-99.9 to 999.9								
487	1110011110	IC30 Water pipe inlet temperature	-99.9 to 999.9								
488	0001011110	IC31 Water pipe inlet temperature	-99.9 to 999.9								
489	1001011110	IC32 Water pipe inlet temperature	-99.9 to 999.9								
490	0101011110	IC33 Water pipe inlet temperature	-99.9 to 999.9								
491	1101011110	IC34 Water pipe inlet temperature	-99.9 to 999.9								
492	0011011110	IC35 Water pipe inlet temperature	-99.9 to 999.9								
493	1011011110	IC36 Water pipe inlet temperature	-99.9 to 999.9								
494	0111011110	IC37 Water pipe inlet temperature	-99.9 to 999.9								
495	1111011110	IC38 Water pipe inlet temperature	-99.9 to 999.9								
496	0000111110	IC39 Water pipe inlet temperature	-99.9 to 999.9								
497	1000111110	IC40 Water pipe inlet temperature	-99.9 to 999.9								
498	0100111110	IC41 Water pipe inlet temperature	-99.9 to 999.9								
499	1100111110	IC42 Water pipe inlet temperature	-99.9 to 999.9								
500	0010111110	IC43 Water pipe inlet temperature	-99.9 to 999.9								
501	1010111110	IC44 Water pipe inlet temperature	-99.9 to 999.9								
502	0110111110	IC45 Water pipe inlet temperature	-99.9 to 999.9								
503	1110111110	IC46 Water pipe inlet temperature	-99.9 to 999.9								
504	0001111110	IC47 Water pipe inlet temperature	-99.9 to 999.9								
505	1001111110	IC48 Water pipe inlet temperature	-99.9 to 999.9								
506	0101111110	IC49 Water pipe inlet temperature	-99.9 to 999.9								
507	1101111110	IC50 Water pipe inlet temperature	-99.9 to 999.9								

Setting data

No.	SW4 (SW6-9: OFF, SW6-10: OFF)	Item	Display								Remarks
	1234567890		LD1	LD2	LD3	LD4	LD5	LD6	LD7	LD8	
512	0000000001	Self-address	Alternate display of self address and unit model								
513	1000000001	IC/FU address	Count-up display of number of connected units								
514	0100000001	RC address	Count-up display of number of connected units								
515	1100000001	HB/HS address	Count-up display of number of connected units								
516	0010000001	OS address	Count-up display of number of connected units								
517	1010000001	Version/Capacity	S/W version → Refrigerant type → Model and capacity → Communication address								
518	0110000001	OC address	OC address display								

Data on indoor unit system

No.	SW4 (SW6-9: OFF, SW6-10: OFF)	Item	Display								Remarks
	1234567890		LD1	LD2	LD3	LD4	LD5	LD6	LD7	LD8	
523	1101000001	IC1 Water pipe outlet temperature	-99.9 to 999.9								The unit is [°C]
524	0011000001	IC2 Water pipe outlet temperature	-99.9 to 999.9								
525	1011000001	IC3 Water pipe outlet temperature	-99.9 to 999.9								
526	0111000001	IC4 Water pipe outlet temperature	-99.9 to 999.9								
527	1111000001	IC5 Water pipe outlet temperature	-99.9 to 999.9								
528	0000100001	IC6 Water pipe outlet temperature	-99.9 to 999.9								
529	1000100001	IC7 Water pipe outlet temperature	-99.9 to 999.9								
530	0100100001	IC8 Water pipe outlet temperature	-99.9 to 999.9								
531	1100100001	IC9 Water pipe outlet temperature	-99.9 to 999.9								
532	0010100001	IC10 Water pipe outlet temperature	-99.9 to 999.9								
533	1010100001	IC11 Water pipe outlet temperature	-99.9 to 999.9								
534	0110100001	IC12 Water pipe outlet temperature	-99.9 to 999.9								
535	1110100001	IC13 Water pipe outlet temperature	-99.9 to 999.9								
536	0001100001	IC14 Water pipe outlet temperature	-99.9 to 999.9								
537	1001100001	IC15 Water pipe outlet temperature	-99.9 to 999.9								
538	0101100001	IC16 Water pipe outlet temperature	-99.9 to 999.9								
539	1101100001	IC17 Water pipe outlet temperature	-99.9 to 999.9								
540	0011100001	IC18 Water pipe outlet temperature	-99.9 to 999.9								
541	1011100001	IC19 Water pipe outlet temperature	-99.9 to 999.9								
542	0111100001	IC20 Water pipe outlet temperature	-99.9 to 999.9								
543	1111100001	IC21 Water pipe outlet temperature	-99.9 to 999.9								
544	0000010001	IC22 Water pipe outlet temperature	-99.9 to 999.9								
545	1000010001	IC23 Water pipe outlet temperature	-99.9 to 999.9								
546	0100010001	IC24 Water pipe outlet temperature	-99.9 to 999.9								
547	1100010001	IC25 Water pipe outlet temperature	-99.9 to 999.9								
548	0010010001	IC26 Water pipe outlet temperature	-99.9 to 999.9								
549	1010010001	IC27 Water pipe outlet temperature	-99.9 to 999.9								
550	0110010001	IC28Water pipe outlet temperature	-99.9 to 999.9								
551	1110010001	IC29 Water pipe outlet temperature	-99.9 to 999.9								
552	0001010001	IC30 Water pipe outlet temperature	-99.9 to 999.9								
553	1001010001	IC31 Water pipe outlet temperature	-99.9 to 999.9								
554	0101010001	IC32 Water pipe outlet temperature	-99.9 to 999.9								
555	1101010001	IC33 Water pipe outlet temperature	-99.9 to 999.9								
556	0011010001	IC34 Water pipe outlet temperature	-99.9 to 999.9								
557	1011010001	IC35 Water pipe outlet temperature	-99.9 to 999.9								
558	0111010001	IC36 Water pipe outlet temperature	-99.9 to 999.9								
559	1111010001	IC37 Water pipe outlet temperature	-99.9 to 999.9								
560	0000110001	IC38 Water pipe outlet temperature	-99.9 to 999.9								
561	1000110001	IC39 Water pipe outlet temperature	-99.9 to 999.9								
562	0100110001	IC40 Water pipe outlet temperature	-99.9 to 999.9								

Data on indoor unit system

No.	SW4 (SW6-9: OFF, SW6-10: OFF)	Item	Display								Remarks
	1234567890		LD1	LD2	LD3	LD4	LD5	LD6	LD7	LD8	
563	1100110001	IC41 Water pipe outlet temperature	-99.9 to 999.9								The unit is [°C]
564	0010110001	IC42 Water pipe outlet temperature	-99.9 to 999.9								
565	1010110001	IC43 Water pipe outlet temperature	-99.9 to 999.9								
566	0110110001	IC44 Water pipe outlet temperature	-99.9 to 999.9								
567	1110110001	IC45 Water pipe outlet temperature	-99.9 to 999.9								
568	0001110001	IC46 Water pipe outlet temperature	-99.9 to 999.9								
569	1001110001	IC47 Water pipe outlet temperature	-99.9 to 999.9								
570	0101110001	IC48 Water pipe outlet temperature	-99.9 to 999.9								
571	1101110001	IC49 Water pipe outlet temperature	-99.9 to 999.9								
572	0011110001	IC50 Water pipe outlet temperature	-99.9 to 999.9								

Setting data

No.	SW4 (SW6-9: OFF, SW6-10: OFF)	Item	Display								Remarks
	1234567890		LD1	LD2	LD3	LD4	LD5	LD6	LD7	LD8	
676	0010010101	INV board S/W version	0.00 to 99.99								
679	1110010101	Fan board (address 5) S/W version	0.00 to 99.99								
680	0001010101	Fan board (address 6) S/W version	0.00 to 99.99								
688	0000110101	Current time	00:00 to 23:59								Hour: minute
689	1000110101	Current time -2	00.00 to 99.12/1 to 31								Year and month, and date alternate display
690	0100110101	Time of error detection 1	00:00 to 23:59								Hour: minute
691	1100110101	Time of error detection 1-2	00.00 to 99.12/1 to 31								Year and month, and date alternate display
692	0010110101	Time of error detection 2	00:00 to 23:59								Hour: minute
693	1010110101	Time of error detection 2-2	00.00 to 99.12/1 to 31								Year and month, and date alternate display
694	0110110101	Time of error detection 3	00:00 to 23:59								Hour: minute
695	1110110101	Time of error detection 3-2	00.00 to 99.12/1 to 31								Year and month, and date alternate display
696	0001110101	Time of error detection 4	00:00 to 23:59								Hour: minute
697	1001110101	Time of error detection 4-2	00.00 to 99.12/1 to 31								Year and month, and date alternate display
698	0101110101	Time of error detection 5	00:00 to 23:59								Hour: minute
699	1101110101	Time of error detection 5-2	00.00 to 99.12/1 to 31								Year and month, and date alternate display
700	0011110101	Time of error detection 6	00:00 to 23:59								Hour: minute
701	1011110101	Time of error detection 6-2	00.00 to 99.12/1 to 31								Year and month, and date alternate display
702	0111110101	Time of error detection 7	00:00 to 23:59								Hour: minute
703	1111110101	Time of error detection 7-2	00.00 to 99.12/1 to 31								Year and month, and date alternate display
704	0000001101	Time of error detection 8	00:00 to 23:59								Hour: minute
705	1000001101	Time of error detection 8-2	00.00 to 99.12/1 to 31								Year and month, and date alternate display
706	0100001101	Time of error detection 9	00:00 to 23:59								Hour: minute
707	1100001101	Time of error detection 9-2	00.00 to 99.12/1 to 31								Year and month, and date alternate display
708	0010001101	Time of error detection 10	00:00 to 23:59								Hour: minute
709	1010001101	Time of error detection 10-2	00.00 to 99.12/1 to 31								Year and month, and date alternate display
710	0110001101	Time of last data backup before error	00:00 to 23:59								Hour: minute
711	1110001101	Time of last data backup before error -2	00.00 to 99.12/1 to 31								Year and month, and date alternate display

Data on indoor unit system

No.	SW4 (SW6-9: OFF, SW6-10: OFF)	Item	Display								Remarks
	1234567890		LD1	LD2	LD3	LD4	LD5	LD6	LD7	LD8	
764	0011111101	IC1 Operation mode	0000: Stop 0001: Ventilation 0002: Cooling 0003: Heating 0004: Dry								
765	1011111101	IC2 Operation mode									
766	0111111101	IC3 Operation mode									
767	1111111101	IC4 Operation mode									
768	0000000011	IC5 Operation mode									
769	1000000011	IC6 Operation mode									
770	0100000011	IC7 Operation mode									
771	1100000011	IC8 Operation mode									
772	0010000011	IC9 Operation mode									
773	1010000011	IC10 Operation mode									
774	0110000011	IC11 Operation mode									
775	1110000011	IC12 Operation mode									
776	0001000011	IC13 Operation mode									
777	1001000011	IC14 Operation mode									
778	0101000011	IC15 Operation mode									
779	1101000011	IC16 Operation mode									
780	0011000011	IC17 Operation mode									
781	1011000011	IC18 Operation mode									
782	0111000011	IC19 Operation mode									
783	1111000011	IC20 Operation mode									
784	0000100011	IC21 Operation mode									
785	1000100011	IC22 Operation mode									
786	0100100011	IC23 Operation mode									
787	1100100011	IC24 Operation mode									
788	0010100011	IC25 Operation mode									
789	1010100011	IC26 Operation mode									
790	0110100011	IC27 Operation mode									
791	1110100011	IC28 Operation mode									

Data on indoor unit system

No.	SW4 (SW6-9: OFF, SW6-10: OFF)	Item	Display								Remarks
	1234567890		LD1	LD2	LD3	LD4	LD5	LD6	LD7	LD8	
792	0001100011	IC29 Operation mode	0000: Stop 0001: Ventilation 0002: Cooling 0003: Heating 0004: Dry								
793	1001100011	IC30 Operation mode									
794	0101100011	IC31 Operation mode									
795	1101100011	IC32 Operation mode									
796	0011100011	IC33 Operation mode									
797	1011100011	IC34 Operation mode									
798	0111100011	IC35 Operation mode									
799	1111100011	IC36 Operation mode									
800	0000010011	IC37 Operation mode									
801	1000010011	IC38 Operation mode									
802	0100010011	IC39 Operation mode									
803	1100010011	IC40 Operation mode									
804	0010010011	IC41 Operation mode									
805	1010010011	IC42 Operation mode									
806	0110010011	IC43 Operation mode									
807	1110010011	IC44 Operation mode									
808	0001010011	IC45 Operation mode									
809	1001010011	IC46 Operation mode									
810	0101010011	IC47 Operation mode									
811	1101010011	IC48 Operation mode									
812	0011010011	IC49 Operation mode									
813	1011010011	IC50 Operation mode									
814	0111010011	IC1 filter	0000 to 9999								Hours since last maintenance [h]
815	1111010011	IC2 filter	0000 to 9999								
816	0000110011	IC3 filter	0000 to 9999								
817	1000110011	IC4 filter	0000 to 9999								
818	0100110011	IC5 filter	0000 to 9999								
819	1100110011	IC6 filter	0000 to 9999								
820	0010110011	IC7 filter	0000 to 9999								
821	1010110011	IC8 filter	0000 to 9999								
822	0110110011	IC9 filter	0000 to 9999								
823	1110110011	IC10 filter	0000 to 9999								
824	0001110011	IC11 filter	0000 to 9999								
825	1001110011	IC12 filter	0000 to 9999								
826	0101110011	IC13 filter	0000 to 9999								
827	1101110011	IC14 filter	0000 to 9999								
828	0011110011	IC15 filter	0000 to 9999								
829	1011110011	IC16 filter	0000 to 9999								
830	0111110011	IC17 filter	0000 to 9999								

Data on indoor unit system

No.	SW4 (SW6-9: OFF, SW6-10: OFF)	Item	Display								Remarks
	1234567890		LD1	LD2	LD3	LD4	LD5	LD6	LD7	LD8	
831	1111110011	IC18 filter	0000 to 9999								Hours since last maintenance [h]
832	0000001011	IC19 filter	0000 to 9999								
833	1000001011	IC20 filter	0000 to 9999								
834	0100001011	IC21 filter	0000 to 9999								
835	1100001011	IC22 filter	0000 to 9999								
836	0010001011	IC23 filter	0000 to 9999								
837	1010001011	IC24 filter	0000 to 9999								
838	0110001011	IC25 filter	0000 to 9999								
839	1110001011	IC26 filter	0000 to 9999								
840	0001001011	IC27 filter	0000 to 9999								Hours since last maintenance [h]
841	1001001011	IC28 filter	0000 to 9999								
842	0101001011	IC29 filter	0000 to 9999								
843	1101001011	IC30 filter	0000 to 9999								
844	0011001011	IC31 filter	0000 to 9999								
845	1011001011	IC32 filter	0000 to 9999								
846	0111001001	IC33 filter	0000 to 9999								
847	1111001011	IC34 filter	0000 to 9999								
848	0000101011	IC35 filter	0000 to 9999								
849	1000101011	IC36 filter	0000 to 9999								
850	0100101011	IC37 filter	0000 to 9999								
851	1100101011	IC38 filter	0000 to 9999								
852	0010101011	IC39 filter	0000 to 9999								
853	1010101011	IC40 filter	0000 to 9999								
854	0110101011	IC41 filter	0000 to 9999								
855	1110101011	IC42 filter	0000 to 9999								
856	0001101011	IC43 filter	0000 to 9999								
857	1001101011	IC44 filter	0000 to 9999								
858	0101101011	IC45 filter	0000 to 9999								
859	1101101011	IC46 filter	0000 to 9999								
860	0011101011	IC47 filter	0000 to 9999								
861	1011101011	IC48 filter	0000 to 9999								
862	0111101011	IC49 filter	0000 to 9999								
863	1111101011	IC50 filter	0000 to 9999								

Other types of data

No.	SW4 (SW6-9: OFF, SW6-10: OFF)	Item	Display								Remarks
	1234567890		LD1	LD2	LD3	LD4	LD5	LD6	LD7	LD8	
871	1110011011	U-phase current effective value 1	-99.9 to 999.9								The unit is [A]
872	0001011011	W-phase current effective value 1	-99.9 to 999.9								
873	1001011011	Power factor phase angle 1	-99.9 to 999.9								The unit is [deg]
880	0000111011	Control board Reset counter	0 to 254								The unit is [time]
881	1000111011	INV board Reset counter	0 to 254								
884	0010111011	Fan board (address 5) reset counter	0 to 254								The unit is [time]
885	1010111011	Fan board (address 6) reset counter	0 to 254								
980	0010101111	M-NET processor S/W version	0.00 to 99.99								

Current data (TURYP/E series only)

No.	SW4 (SW6-9:ON, SW6-10:OFF)	Item	Display								Remarks
	1234567890		LD1	LD2	LD3	LD4	LD5	LD6	LD7	LD8	
1320	0001010010	Relay output display HBC (Main)	SVM1	21S4Ma	21S4Mb	72C	Float switch	Loose float switch connector	Oil balance	Low frequency oil recovery	
1321	1001010010	WP1 control (HBC) (Main)	HBC (Main) address ↔ 0000 to 0100*1								
1322	0101010010	WP2 control (HBC) (Main)	HBC (Main) address ↔ 0000 to 0100*1								
1323	1101010010	WP1 rotation (HBC) (Main)	HBC (Main) address ↔ 0000 to 9999*1								
1324	0011010010	WP2 rotation (HBC) (Main)	HBC (Main) address ↔ 0000 to 9999*1								
1325	1011010010	TH11 (HBC) (Main)	HBC (Main) address ↔ -99.9 to 999.9*1								
1326	0111010010	TH12 (HBC) (Main)	HBC (Main) address ↔ -99.9 to 999.9*1								
1327	1111010010	TH13 (HBC) (Main)	HBC (Main) address ↔ -99.9 to 999.9*1								
1328	0000110010	TH14 (HBC) (Main)	HBC (Main) address ↔ -99.9 to 999.9*1								
1329	1000110010	TH15 (HBC) (Main)	HBC (Main) address ↔ -99.9 to 999.9*1								
1330	0100110010	TH16 (HBC) (Main)	HBC (Main) address ↔ -99.9 to 999.9*1								
1331	1100110010	TH31a (HBC) (Main)	HBC (Main) address ↔ -99.9 to 999.9*1								
1332	0010110010	TH31b (HBC) (Main)	HBC (Main) address ↔ -99.9 to 999.9*1								
1333	1010110010	TH31c (HBC) (Main)	HBC (Main) address ↔ -99.9 to 999.9*1								
1334	0110110010	TH31d (HBC) (Main)	HBC (Main) address ↔ -99.9 to 999.9*1								
1335	1110110010	TH31e (HBC) (Main)	HBC (Main) address ↔ -99.9 to 999.9*1								
1336	0001110010	TH31f (HBC) (Main)	HBC (Main) address ↔ -99.9 to 999.9*1								
1337	1001110010	TH31g (HBC) (Main)	HBC (Main) address ↔ -99.9 to 999.9*1								
1338	0101110010	TH31h (HBC) (Main)	HBC (Main) address ↔ -99.9 to 999.9*1								
1339	1101110010	TH31i (HBC) (Main)	HBC (Main) address ↔ -99.9 to 999.9*1								
1340	0011110010	TH31j (HBC) (Main)	HBC (Main) address ↔ -99.9 to 999.9*1								
1341	1011110010	TH31k (HBC) (Main)	HBC (Main) address ↔ -99.9 to 999.9*1								
1342	0111110010	TH31l (HBC) (Main)	HBC (Main) address ↔ -99.9 to 999.9*1								
1343	1111110010	TH31m (HBC) (Main)	HBC (Main) address ↔ -99.9 to 999.9*1								
1344	0000001010	TH31n (HBC) (Main)	HBC (Main) address ↔ -99.9 to 999.9*1								
1345	1000001010	TH31o (HBC) (Main)	HBC (Main) address ↔ -99.9 to 999.9*1								
1346	0100001010	TH31p (HBC) (Main)	HBC (Main) address ↔ -99.9 to 999.9*1								
1347	1100001010	TH32 (HBC) (Main)	HBC (Main) address ↔ -99.9 to 999.9*1								
1348	0010001010	TH33 (HBC) (Main)	HBC (Main) address ↔ -99.9 to 999.9*1								
1349	1010001010	TH34 (HBC) (Main)	HBC (Main) address ↔ -99.9 to 999.9*1								
1350	0110001010	TH35 (HBC) (Main)	HBC (Main) address ↔ -99.9 to 999.9*1								
1351	1110001010	SC1 (HBC) (Main)	HBC (Main) address ↔ -99.9 to 999.9*1								
1352	0001001010	SC2 (HBC) (Main)	HBC (Main) address ↔ -99.9 to 999.9*1								
1353	1001001010	SH1 (HBC) (Main)	HBC (Main) address ↔ -99.9 to 999.9*1								
1354	0101001010	SH2 (HBC) (Main)	HBC (Main) address ↔ -99.9 to 999.9*1								
1355	1101001010	PT1 (HBC) (Main)	HBC (Main) address ↔ -99.9 to 999.9*1								

*1 When multiple main HBC and sub HBC controllers are connected to the outdoor unit or heat source unit, the addresses and the values of these controllers will be displayed on the maintenance LED in the following cycle: HBC (Main1) (HBC (Sub1)) addresses → HBC (Main1) (HBC (Sub1)) values → Blank → HBC (Main2) (HBC (Sub2)) addresses → HBC (Main2) (HBC (Sub2)) values → Blank → HBC (Main1) (HBC (Sub1)) addresses (cycles back to the beginning and repeats).

Current data (TURYP/E series only)

No.	SW4 (SW6-9:ON, SW6-10:OFF)	Item	Display								Remarks
	1234567890		LD1	LD2	LD3	LD4	LD5	LD6	LD7	LD8	
1356	0011001010	dPHM (HBC) (Main)	HBC (Main) address ↔ -99.9 to 999.9*1								
1357	1011001010	PS1 (HBC) (Main)	HBC (Main) address ↔ -99.9 to 999.9*1								
1358	0111001010	PS3 (HBC) (Main)	HBC (Main) address ↔ -99.9 to 999.9*1								
1359	1111001010	LEV1 opening (HBC) (Main)	HBC (Main) address ↔ -99.9 to 999.9*1								
1360	0000101010	LEV2 opening (HBC) (Main)	HBC (Main) address ↔ -99.9 to 999.9*1								
1361	1000101010	LEV3 opening (HBC) (Main)	HBC (Main) address ↔ -99.9 to 999.9*1								
1362	0100101010	TH41a (HBC) (Sub)	HBC (Sub) address ↔ -99.9 to 999.9*1								
1363	1100101010	TH41b (HBC) (Sub)	HBC (Sub) address ↔ -99.9 to 999.9*1								
1364	0010101010	TH41c (HBC) (Sub)	HBC (Sub) address ↔ -99.9 to 999.9*1								
1365	1010101010	TH41d (HBC) (Sub)	HBC (Sub) address ↔ -99.9 to 999.9*1								
1366	0110101010	TH41e (HBC) (Sub)	HBC (Sub) address ↔ -99.9 to 999.9*1								
1367	1110101010	TH41f (HBC) (Sub)	HBC (Sub) address ↔ -99.9 to 999.9*1								
1368	0001101010	TH41g (HBC) (Sub)	HBC (Sub) address ↔ -99.9 to 999.9*1								
1369	1001101010	TH41h (HBC) (Sub)	HBC (Sub) address ↔ -99.9 to 999.9*1								
1370	0101101010	TH41i (HBC) (Sub)	HBC (Sub) address ↔ -99.9 to 999.9*1								
1371	1101101010	TH41j (HBC) (Sub)	HBC (Sub) address ↔ -99.9 to 999.9*1								
1372	0011101010	TH41k (HBC) (Sub)	HBC (Sub) address ↔ -99.9 to 999.9*1								
1373	1011101010	TH41l (HBC) (Sub)	HBC (Sub) address ↔ -99.9 to 999.9*1								
1374	0111101010	TH41m (HBC) (Sub)	HBC (Sub) address ↔ -99.9 to 999.9*1								
1375	1111101010	TH41n (HBC) (Sub)	HBC (Sub) address ↔ -99.9 to 999.9*1								
1376	0000011010	TH41o (HBC) (Sub)	HBC (Sub) address ↔ -99.9 to 999.9*1								
1377	1000011010	TH41p (HBC) (Sub)	HBC (Sub) address ↔ -99.9 to 999.9*1								
1378	0100011010	TH32 (HBC) (Sub)	HBC (Sub) address ↔ -99.9 to 999.9*1								
1379	1100011010	TH33 (HBC) (Sub)	HBC (Sub) address ↔ -99.9 to 999.9*1								
1380	0010011010	VB1a (HBC) (Main)	HBC (Main) address ↔ 0 or C1 to C999 or H1 to H999 or 1000 to 9999*1								
1381	1010011010	VB1b (HBC) (Main)	HBC (Main) address ↔ 0 or C1 to C999 or H1 to H999 or 1000 to 9999*1								
1382	0110011010	VB1c (HBC) (Main)	HBC (Main) address ↔ 0 or C1 to C999 or H1 to H999 or 1000 to 9999*1								
1383	1110011010	VB1d (HBC) (Main)	HBC (Main) address ↔ 0 or C1 to C999 or H1 to H999 or 1000 to 9999*1								
1384	0001011010	VB1e (HBC) (Main)	HBC (Main) address ↔ 0 or C1 to C999 or H1 to H999 or 1000 to 9999*1								
1385	1001011010	VB1f (HBC) (Main)	HBC (Main) address ↔ 0 or C1 to C999 or H1 to H999 or 1000 to 9999*1								
1386	0101011010	VB1g (HBC) (Main)	HBC (Main) address ↔ 0 or C1 to C999 or H1 to H999 or 1000 to 9999*1								
1387	1101011010	VB1h (HBC) (Main)	HBC (Main) address ↔ 0 or C1 to C999 or H1 to H999 or 1000 to 9999*1								
1388	0011011010	VB1i (HBC) (Main)	HBC (Main) address ↔ 0 or C1 to C999 or H1 to H999 or 1000 to 9999*1								
1389	1011011010	VB1j (HBC) (Main)	HBC (Main) address ↔ 0 or C1 to C999 or H1 to H999 or 1000 to 9999*1								
1390	0111011010	VB1k (HBC) (Main)	HBC (Main) address ↔ 0 or C1 to C999 or H1 to H999 or 1000 to 9999*1								
1391	1111011010	VB1l (HBC) (Main)	HBC (Main) address ↔ 0 or C1 to C999 or H1 to H999 or 1000 to 9999*1								
1392	0000111010	VB1m (HBC) (Main)	HBC (Main) address ↔ 0 or C1 to C999 or H1 to H999 or 1000 to 9999*1								

*1 When multiple main HBC and sub HBC controllers are connected to the outdoor unit or heat source unit, the addresses and the values of these controllers will be displayed on the maintenance LED in the following cycle: HBC (Main1) (HBC (Sub1)) addresses → HBC (Main1) (HBC (Sub1)) values → Blank → HBC (Main2) (HBC (Sub2)) addresses → HBC (Main2) (HBC (Sub2)) values → Blank → HBC (Main1) (HBC (Sub1)) addresses (cycles back to the beginning and repeats).

Current data (TURYP/E series only)

No.	SW4 (SW6-9:ON, SW6-10:OFF)	Item	Display								Remarks
	1234567890		LD1	LD2	LD3	LD4	LD5	LD6	LD7	LD8	
1393	1000111010	VB1n (HBC) (Main)	HBC (Main) address ↔ 0 or C1 to C999 or H1 to H999 or 1000 to 9999*1								
1394	0100111010	VB1o (HBC) (Main)	HBC (Main) address ↔ 0 or C1 to C999 or H1 to H999 or 1000 to 9999*1								
1395	1100111010	VB1p (HBC) (Main)	HBC (Main) address ↔ 0 or C1 to C999 or H1 to H999 or 1000 to 9999*1								
1396	0010111010	VB1a (HBC) (Sub)	HBC (Sub) address ↔ 0 or C1 to C999 or H1 to H999 or 1000 to 9999*1								
1397	1010111010	VB1b (HBC) (Sub)	HBC (Sub) address ↔ 0 or C1 to C999 or H1 to H999 or 1000 to 9999*1								
1398	0110111010	VB1c (HBC) (Sub)	HBC (Sub) address ↔ 0 or C1 to C999 or H1 to H999 or 1000 to 9999*1								
1399	1110111010	VB1d (HBC) (Sub)	HBC (Sub) address ↔ 0 or C1 to C999 or H1 to H999 or 1000 to 9999*1								
1400	0001111010	VB1e (HBC) (Sub)	HBC (Sub) address ↔ 0 or C1 to C999 or H1 to H999 or 1000 to 9999*1								
1401	1001111010	VB1f (HBC) (Sub)	HBC (Sub) address ↔ 0 or C1 to C999 or H1 to H999 or 1000 to 9999*1								
1402	0101111010	VB1g (HBC) (Sub)	HBC (Sub) address ↔ 0 or C1 to C999 or H1 to H999 or 1000 to 9999*1								
1403	1101111010	VB1h (HBC) (Sub)	HBC (Sub) address ↔ 0 or C1 to C999 or H1 to H999 or 1000 to 9999*1								
1404	0011111010	VB1i (HBC) (Sub)	HBC (Sub) address ↔ 0 or C1 to C999 or H1 to H999 or 1000 to 9999*1								
1405	1011111010	VB1j (HBC) (Sub)	HBC (Sub) address ↔ 0 or C1 to C999 or H1 to H999 or 1000 to 9999*1								
1406	0111111010	VB1k (HBC) (Sub)	HBC (Sub) address ↔ 0 or C1 to C999 or H1 to H999 or 1000 to 9999*1								
1407	1111111010	VB1l (HBC) (Sub)	HBC (Sub) address ↔ 0 or C1 to C999 or H1 to H999 or 1000 to 9999*1								
1408	0000000110	VB1m (HBC) (Sub)	HBC (Sub) address ↔ 0 or C1 to C999 or H1 to H999 or 1000 to 9999*1								
1409	1000000110	VB1n (HBC) (Sub)	HBC (Sub) address ↔ 0 or C1 to C999 or H1 to H999 or 1000 to 9999*1								
1410	0100000110	VB1o (HBC) (Sub)	HBC (Sub) address ↔ 0 or C1 to C999 or H1 to H999 or 1000 to 9999*1								
1411	1100000110	VB1p (HBC) (Sub)	HBC (Sub) address ↔ 0 or C1 to C999 or H1 to H999 or 1000 to 9999*1								

*1 When multiple main HBC and sub HBC controllers are connected to the outdoor unit or heat source unit, the addresses and the values of these controllers will be displayed on the maintenance LED in the following cycle: HBC (Main1) (HBC (Sub1)) addresses → HBC (Main1) (HBC (Sub1)) values → Blank → HBC (Main2) (HBC (Sub2)) addresses → HBC (Main2) (HBC (Sub2)) values → Blank → HBC (Main1) (HBC (Sub1)) addresses (cycles back to the beginning and repeats).

Data before error (TURYP/E series only)

No.	SW4 (SW6 - 9: ON, SW6-10: OFF)	Item	Display								Remarks
	1234567890		LD1	LD2	LD3	LD4	LD5	LD6	LD7	LD8	
1656	0001111001	Relay output display (HBC) (Main)	SVM1	21S4Ma	21S4Mb	72C	Float switch	Loose float switch connector	Oil balance	Low frequency oil recovery	
1657	1001111001	WP1 control (HBC) (Main)	HBC (Main) address ↔ 0000 to 0100*1								
1658	0101111001	WP2 control (HBC) (Main)	HBC (Main) address ↔ 0000 to 0100*1								
1659	1101111001	WP1 rotation (HBC) (Main)	HBC (Main) address ↔ 0000 to 9999*1								
1660	0011111001	WP2 rotation (HBC) (Main)	HBC (Main) address ↔ 0000 to 9999*1								
1661	1011111001	TH11 (HBC) (Main)	HBC (Main) address ↔ -99.9 to 999.9*1								
1662	0111111001	TH12 (HBC) (Main)	HBC (Main) address ↔ -99.9 to 999.9*1								
1663	1111111001	TH13 (HBC) (Main)	HBC (Main) address ↔ -99.9 to 999.9*1								
1664	0000000101	TH14 (HBC) (Main)	HBC (Main) address ↔ -99.9 to 999.9*1								
1665	1000000101	TH15 (HBC) (Main)	HBC (Main) address ↔ -99.9 to 999.9*1								
1666	0100000101	TH16 (HBC) (Main)	HBC (Main) address ↔ -99.9 to 999.9*1								
1667	1100000101	TH31a (HBC) (Main)	HBC (Main) address ↔ -99.9 to 999.9*1								
1668	0010000101	TH31b (HBC) (Main)	HBC (Main) address ↔ -99.9 to 999.9*1								
1669	1010000101	TH31c (HBC) (Main)	HBC (Main) address ↔ -99.9 to 999.9*1								
1670	0110000101	TH31d (HBC) (Main)	HBC (Main) address ↔ -99.9 to 999.9*1								
1671	1110000101	TH31e (HBC) (Main)	HBC (Main) address ↔ -99.9 to 999.9*1								
1672	0001000101	TH31f (HBC) (Main)	HBC (Main) address ↔ -99.9 to 999.9*1								
1673	1001000101	TH31g (HBC) (Main)	HBC (Main) address ↔ -99.9 to 999.9*1								
1674	0101000101	TH31h (HBC) (Main)	HBC (Main) address ↔ -99.9 to 999.9*1								
1675	1101000101	TH31i (HBC) (Main)	HBC (Main) address ↔ -99.9 to 999.9*1								
1676	0011000101	TH31j (HBC) (Main)	HBC (Main) address ↔ -99.9 to 999.9*1								
1677	1011000101	TH31k (HBC) (Main)	HBC (Main) address ↔ -99.9 to 999.9*1								
1678	0111000101	TH31l (HBC) (Main)	HBC (Main) address ↔ -99.9 to 999.9*1								
1679	1111000101	TH31m (HBC) (Main)	HBC (Main) address ↔ -99.9 to 999.9*1								
1680	0000100101	TH31n (HBC) (Main)	HBC (Main) address ↔ -99.9 to 999.9*1								
1681	1000100101	TH31o (HBC) (Main)	HBC (Main) address ↔ -99.9 to 999.9*1								
1682	0100100101	TH31p (HBC) (Main)	HBC (Main) address ↔ -99.9 to 999.9*1								
1683	1100100101	TH32 (HBC) (Main)	HBC (Main) address ↔ -99.9 to 999.9*1								
1684	0010100101	TH33 (HBC) (Main)	HBC (Main) address ↔ -99.9 to 999.9*1								
1685	1010100101	TH34 (HBC) (Main)	HBC (Main) address ↔ -99.9 to 999.9*1								
1686	0110100101	TH35 (HBC) (Main)	HBC (Main) address ↔ -99.9 to 999.9*1								
1687	1110100101	SC1 (HBC) (Main)	HBC (Main) address ↔ -99.9 to 999.9*1								
1688	0001100101	SC2 (HBC) (Main)	HBC (Main) address ↔ -99.9 to 999.9*1								
1689	1001100101	SH1 (HBC) (Main)	HBC (Main) address ↔ -99.9 to 999.9*1								
1690	0101100101	SH2 (HBC) (Main)	HBC (Main) address ↔ -99.9 to 999.9*1								

*1 When multiple main HBC and sub HBC controllers are connected to the outdoor unit or heat source unit, the addresses and the values of these controllers will be displayed on the maintenance LED in the following cycle: HBC (Main1) (HBC (Sub1)) addresses → HBC (Main1) (HBC (Sub1)) values → Blank → HBC (Main2) (HBC (Sub2)) addresses → HBC (Main2) (HBC (Sub2)) values → Blank → HBC (Main1) (HBC (Sub1)) addresses (cycles back to the beginning and repeats).

Data before error (TURYP/E series only)

No.	SW4 (SW6 - 9: ON, SW6-10: OFF)	Item	Display								Remarks
	1234567890		LD1	LD2	LD3	LD4	LD5	LD6	LD7	LD8	
1691	1101100101	PT1 (HBC) (Main)	HBC (Main) address ↔ -99.9 to 999.9*1								
1692	0011100101	dPHM (HBC) (Main)	HBC (Main) address ↔ -99.9 to 999.9*1								
1693	1011100101	PS1 (HBC) (Main)	HBC (Main) address ↔ -99.9 to 999.9*1								
1694	0111100101	PS3 (HBC) (Main)	HBC (Main) address ↔ -99.9 to 999.9*1								
1695	1111100101	LEV1 opening (HBC) (Main)	HBC (Main) address ↔ -99.9 to 999.9*1								
1696	0000010101	LEV2 opening (HBC) (Main)	HBC (Main) address ↔ -99.9 to 999.9*1								
1697	1000010101	LEV3 opening (HBC) (Main)	HBC (Main) address ↔ -99.9 to 999.9*1								
1698	0100010101	TH41a (HBC) (Sub)	HBC (Sub) address ↔ -99.9 to 999.9*1								
1699	1100010101	TH41b (HBC) (Sub)	HBC (Sub) address ↔ -99.9 to 999.9*1								
1700	0010010101	TH41c (HBC) (Sub)	HBC (Sub) address ↔ -99.9 to 999.9*1								
1701	1010010101	TH41d (HBC) (Sub)	HBC (Sub) address ↔ -99.9 to 999.9*1								
1702	0110010101	TH41e (HBC) (Sub)	HBC (Sub) address ↔ -99.9 to 999.9*1								
1703	1110010101	TH41f (HBC) (Sub)	HBC (Sub) address ↔ -99.9 to 999.9*1								
1704	0001010101	TH41g (HBC) (Sub)	HBC (Sub) address ↔ -99.9 to 999.9*1								
1705	1001010101	TH41h (HBC) (Sub)	HBC (Sub) address ↔ -99.9 to 999.9*1								
1706	0101010101	TH41i (HBC) (Sub)	HBC (Sub) address ↔ -99.9 to 999.9*1								
1707	1101010101	TH41j (HBC) (Sub)	HBC (Sub) address ↔ -99.9 to 999.9*1								
1708	0011010101	TH41k (HBC) (Sub)	HBC (Sub) address ↔ -99.9 to 999.9*1								
1709	1011010101	TH41l (HBC) (Sub)	HBC (Sub) address ↔ -99.9 to 999.9*1								
1710	0111010101	TH41m (HBC) (Sub)	HBC (Sub) address ↔ -99.9 to 999.9*1								
1711	1111010101	TH41n (HBC) (Sub)	HBC (Sub) address ↔ -99.9 to 999.9*1								
1712	0000110101	TH41o (HBC) (Sub)	HBC (Sub) address ↔ -99.9 to 999.9*1								
1713	1000110101	TH41p (HBC) (Sub)	HBC (Sub) address ↔ -99.9 to 999.9*1								
1714	0100110101	TH32 (HBC) (Sub)	HBC (Sub) address ↔ -99.9 to 999.9*1								
1715	1100110101	TH33 (HBC) (Sub)	HBC (Sub) address ↔ -99.9 to 999.9*1								
1716	0010110101	VB1a (HBC) (Main)	HBC (Main) address ↔ 0 or C1 to C999 or H1 to H999 or 1000 to 9999*1								
1717	1010110101	VB1b (HBC) (Main)	HBC (Main) address ↔ 0 or C1 to C999 or H1 to H999 or 1000 to 9999*1								
1718	0110110101	VB1c (HBC) (Main)	HBC (Main) address ↔ 0 or C1 to C999 or H1 to H999 or 1000 to 9999*1								
1719	1110110101	VB1d (HBC) (Main)	HBC (Main) address ↔ 0 or C1 to C999 or H1 to H999 or 1000 to 9999*1								
1720	0001110101	VB1e (HBC) (Main)	HBC (Main) address ↔ 0 or C1 to C999 or H1 to H999 or 1000 to 9999*1								
1721	1001110101	VB1f (HBC) (Main)	HBC (Main) address ↔ 0 or C1 to C999 or H1 to H999 or 1000 to 9999*1								
1722	0101110101	VB1g (HBC) (Main)	HBC (Main) address ↔ 0 or C1 to C999 or H1 to H999 or 1000 to 9999*1								
1723	1101110101	VB1h (HBC) (Main)	HBC (Main) address ↔ 0 or C1 to C999 or H1 to H999 or 1000 to 9999*1								
1724	0011110101	VB1i (HBC) (Main)	HBC (Main) address ↔ 0 or C1 to C999 or H1 to H999 or 1000 to 9999*1								
1725	1011110101	VB1j (HBC) (Main)	HBC (Main) address ↔ 0 or C1 to C999 or H1 to H999 or 1000 to 9999*1								
1726	0111110101	VB1k (HBC) (Main)	HBC (Main) address ↔ 0 or C1 to C999 or H1 to H999 or 1000 to 9999*1								
1727	1111110101	VB1l (HBC) (Main)	HBC (Main) address ↔ 0 or C1 to C999 or H1 to H999 or 1000 to 9999*1								

*1 When multiple main HBC and sub HBC controllers are connected to the outdoor unit or heat source unit, the addresses and the values of these controllers will be displayed on the maintenance LED in the following cycle: HBC (Main1) (HBC (Sub1)) addresses → HBC (Main1) (HBC (Sub1)) values → Blank → HBC (Main2) (HBC (Sub2)) addresses → HBC (Main2) (HBC (Sub2)) values → Blank → HBC (Main1) (HBC (Sub1)) addresses (cycles back to the beginning and repeats).

Data before error (TURYP/E series only)

No.	SW4 (SW6 - 9: ON, SW6-10: OFF)	Item	Display								Remarks
	1234567890		LD1	LD2	LD3	LD4	LD5	LD6	LD7	LD8	
1728	0000001101	VB1m (HBC) (Main)	HBC (Main) address ↔ 0 or C1 to C999 or H1 to H999 or 1000 to 9999*1								
1729	1000001101	VB1n (HBC) (Main)	HBC (Main) address ↔ 0 or C1 to C999 or H1 to H999 or 1000 to 9999*1								
1730	0100001101	VB1o (HBC) (Main)	HBC (Main) address ↔ 0 or C1 to C999 or H1 to H999 or 1000 to 9999*1								
1731	1100001101	VB1p (HBC) (Main)	HBC (Main) address ↔ 0 or C1 to C999 or H1 to H999 or 1000 to 9999*1								
1732	0010001101	VB1a (HBC) (Sub)	HBC (Sub) address ↔ 0 or C1 to C999 or H1 to H999 or 1000 to 9999*1								
1733	1010001101	VB1b (HBC) (Sub)	HBC (Sub) address ↔ 0 or C1 to C999 or H1 to H999 or 1000 to 9999*1								
1734	0110001101	VB1c (HBC) (Sub)	HBC (Sub) address ↔ 0 or C1 to C999 or H1 to H999 or 1000 to 9999*1								
1735	1110001101	VB1d (HBC) (Sub)	HBC (Sub) address ↔ 0 or C1 to C999 or H1 to H999 or 1000 to 9999*1								
1736	0001001101	VB1e (HBC) (Sub)	HBC (Sub) address ↔ 0 or C1 to C999 or H1 to H999 or 1000 to 9999*1								
1737	1001001101	VB1f (HBC) (Sub)	HBC (Sub) address ↔ 0 or C1 to C999 or H1 to H999 or 1000 to 9999*1								
1738	0101001101	VB1g (HBC) (Sub)	HBC (Sub) address ↔ 0 or C1 to C999 or H1 to H999 or 1000 to 9999*1								
1739	1101001101	VB1h (HBC) (Sub)	HBC (Sub) address ↔ 0 or C1 to C999 or H1 to H999 or 1000 to 9999*1								
1740	0011001101	VB1i (HBC) (Sub)	HBC (Sub) address ↔ 0 or C1 to C999 or H1 to H999 or 1000 to 9999*1								
1741	1011001101	VB1j (HBC) (Sub)	HBC (Sub) address ↔ 0 or C1 to C999 or H1 to H999 or 1000 to 9999*1								
1742	0111001101	VB1k (HBC) (Sub)	HBC (Sub) address ↔ 0 or C1 to C999 or H1 to H999 or 1000 to 9999*1								
1743	1111001101	VB1l (HBC) (Sub)	HBC (Sub) address ↔ 0 or C1 to C999 or H1 to H999 or 1000 to 9999*1								
1744	0000101101	VB1m (HBC) (Sub)	HBC (Sub) address ↔ 0 or C1 to C999 or H1 to H999 or 1000 to 9999*1								
1745	1000101101	VB1n (HBC) (Sub)	HBC (Sub) address ↔ 0 or C1 to C999 or H1 to H999 or 1000 to 9999*1								
1746	0100101101	VB1o (HBC) (Sub)	HBC (Sub) address ↔ 0 or C1 to C999 or H1 to H999 or 1000 to 9999*1								
1747	1100101101	VB1p (HBC) (Sub)	HBC (Sub) address ↔ 0 or C1 to C999 or H1 to H999 or 1000 to 9999*1								

*1 When multiple main HBC and sub HBC controllers are connected to the outdoor unit or heat source unit, the addresses and the values of these controllers will be displayed on the maintenance LED in the following cycle: HBC (Main1) (HBC (Sub1)) addresses → HBC (Main1) (HBC (Sub1)) values → Blank → HBC (Main2) (HBC (Sub2)) addresses → HBC (Main2) (HBC (Sub2)) values → Blank → HBC (Main1) (HBC (Sub1)) addresses (cycles back to the beginning and repeats).

Service Handbook

Model

TCMBM0108VA11N4
TCMBM1016VA11N4
TCMBS0108VB11N4
TCMBS1016VB11N4

MITSUBISHI ELECTRIC TRANE HVAC US LLC

HEAD OFFICE: 1340 SATELLITE BLVD, SUWANEE GA 30024 USA

HWE22070

New publication effective Dec. 2022
Specifications subject to change without notice