AIR CONDITIONERS

2022

# TECHNICAL & SERVICE MANUAL

Model name
<Indoor unit>

**TPEFYW006MA1W0A**
**TPEFYW008MA1W0A**
**TPEFYW012MA1W0A**
**TPEFYW015MA1W0A**
**TPEFYW018MA1W0A**
**TPEFYW024MA1W0A**
**TPEFYW027MA1W0A**
**TPEFYW030MA1W0A**
**TPEFYW036MA1W0A**
**TPEFYW048MA1W0A**

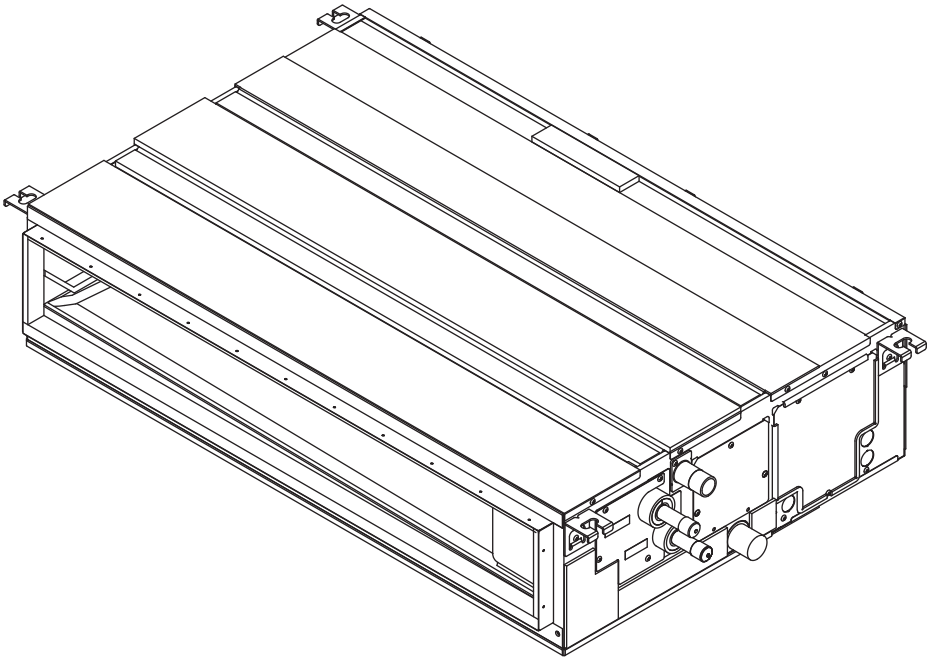

# Safety Precautions

## Read before installation and performing electrical work

- Thoroughly read the following safety precautions prior to installation.
- Observe these safety precautions for your safety.
- This equipment may have adverse effects on the equipment on the same power supply system.
- Contact the local power authority before connecting to the system.

**Symbol explanations**

**WARNING**
This symbol indicates that failure to follow the instructions exactly as stated poses the risk of serious injury or death.

**CAUTION**
This symbol indicates that failure to follow the instructions exactly as stated poses the risk of serious injury or damage to the unit.

Indicates an action that must be avoided.

Indicates important instructions.

Indicates a parts that requires grounding.

Indicates that caution must be taken with rotating parts. (This symbol is on the main unit label.) <Color: Yellow>

Indicates that the parts that are marked with this symbol pose a risk of electric shock. (This symbol is on the main unit label.) <Color: Yellow>

**WARNING**
Carefully read the labels affixed to the main unit.

**WARNING**

| |
|---|
| Do not use refrigerant other than the type indicated in the manuals provided with the unit and on the nameplate. |
| Doing so may cause the unit or pipes to burst, or result in explosion or fire during use, during repair, or at the time of disposal of the unit.<br>It may also be in violation of applicable laws.<br>Mitsubishi Electric Trane HVAC US LLC cannot be held responsible for malfunctions or accidents resulting from the use of the wrong type of refrigerant. |

| |
|---|
| Ask your dealer or a qualified technician to install the unit. |
| Improper installation by the user may result in water leakage, electric shock, or fire. |

| |
|---|
| Properly install the unit on a surface that can withstand its weight. |
| Unit installed on an unstable surface may fall and cause injury. |

| |
|---|
| Only use specified cables. Securely connect each cable so that the terminals do not carry the weight of the cable. |
| Improperly connected cables may produce heat and start a fire. |

| |
|---|
| Take appropriate safety measures against wind gusts and earthquakes to prevent the unit from toppling over. |
| Improper installation may cause the unit to topple over and cause injury or damage to the unit. |

| |
|---|
| Only use accessories (i.e., air cleaners, humidifiers, electric heaters) recommended by Mitsubishi Electric Trane HVAC US LLC. |

| |
|---|
| Do not make any modifications or alterations to the unit. Consult your dealer for repair. |
| Improper repair may result in water leakage, electric shock, or fire. |

| |
|---|
| Do not touch the heat exchanger fins with bare hands. |
| The fins are sharp and pose a risk of cuts. |

| |
|---|
| Properly install the unit according to the instructions in the Installation Manual. |
| Improper installation may result in water leakage, electric shock, or fire. |

| |
|---|
| Have all electrical work performed by an authorized electrician according to the local regulations and the instructions in this manual. Use a dedicated circuit. |
| Insufficient power supply capacity or improper installation of the unit may result in malfunctions of the unit, electric shock, or fire. |

| |
|---|
| Disconnect all electric power supplies before accessing of electric parts (inner of control box, fan motor, drain pump etc.) |
| Touching electric parts result in electric shock. |

| |
|---|
| Keep electrical parts away from water. |
| Wet electrical parts pose a risk of electric shock, smoke, or fire. |

| |
|---|
| Securely attach the control box cover. |
| If the cover is not installed properly, dust or water may infiltrate and pose a risk of electric shock, smoke, or fire. |

| |
|---|
| Consult your dealer or a qualified technician when moving or reinstalling the unit. |
| Improper installation may result in water leakage, electric shock, or fire. |

| |
|---|
| Do not try to defeat the safety features of the unit. |
| Forced operation of the pressure switch or the temperature switch by defeating the safety features for these devices, or the use of accessories other than the ones that are recommended by Mitsubishi Electric Trane HVAC US LLC may result in smoke, fire, or explosion. |

| |
|---|
| After completing the service work, check for a water leak. |

| |
|---|
| Consult your dealer for proper disposal method. |

## ⚠ CAUTION

| |
|---|
| Do not use the existing water piping. |
| Store the piping materials indoors, and keep both ends of the pipes sealed until immediately before installation. Keep the joints wrapped in plastic bags. If dust or dirt enters the water circuit, it may damage the heat exchanger and cause water leakage. |

| |
|---|
| Only use water. |
| Only use clean water as a refrigerant. The use of water outside the specification may damage the refrigerant circuit. |

| |
|---|
| Install the unit so that external force is not applied to the water pipes. |

# CONTENTS


## I Features
[1] Features ..... 1

## II Components and Functions
[1] Components and Functions ..... 2

## III Specifications
[1] Specifications ..... 5
1.Specifications ..... 5
2.Electrical component specifications ..... 8

## IV Outlines and Dimensions
[1] Outlines and Dimensions ..... 9

## V Wiring Diagram
[1] Wiring Diagram ..... 11

## VI Water System Diagram
[1] Water System Diagram ..... 12

## VII Microprocessor Control
[1] Microprocessor Control ..... 13
1.Cool operation ..... 13
2.Drying operation ..... 15
3.Fan operation ..... 16
4.Heat operation ..... 17
5.Auto operation [Automatic Cool / Heat change over operation] ..... 18
6.When unit is stopped control mode ..... 19
7.Heater control ..... 19

## VIII Troubleshooting
[1] Troubleshooting ..... 25
1.Check methods ..... 25
2.DC fan motor (fan motor/indoor control board) ..... 27
3.Address switch setting ..... 28
4.Voltage test points on the control board ..... 29
5.Dipswitch setting (Factory setting) ..... 30

## IX Disassembly Procedure
[1] Disassembly Procedure ..... 33
1.Control box ..... 33
2.Thermistor (Intake air) ..... 34
3.Drain pump ..... 34
4.Drain pan ..... 35
5.Thermistor (Water inlet/outlet piping temperature detection) ..... 36
6.Fan and fan motor ..... 37
7.Heat exchanger ..... 38

## [1] Features

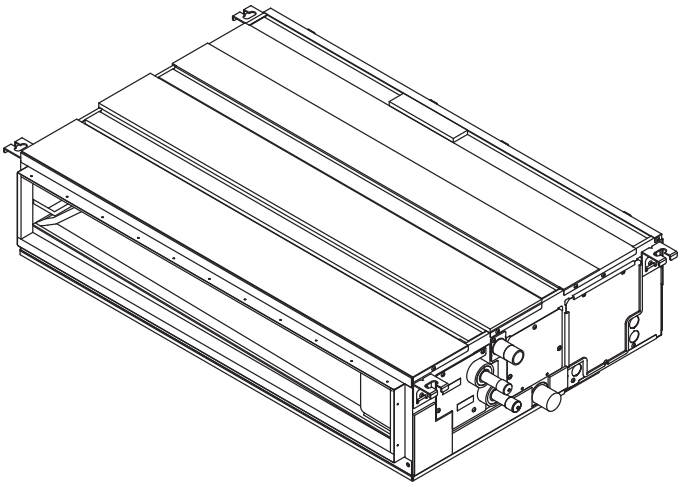

| Model | Cooling capacity/Heating capacity | |
|---|---|---|
| | BTU/h | kW |
| TPEFYW006MA1W0A | 6000/6700 | 1.8/2.0 |
| TPEFYW008MA1W0A | 8000/9000 | 2.3/2.6 |
| TPEFYW012MA1W0A | 12000/13500 | 3.5/4.0 |
| TPEFYW015MA1W0A | 15000/17000 | 4.4/5.0 |
| TPEFYW018MA1W0A | 18000/20000 | 5.3/5.9 |
| TPEFYW024MA1W0A | 24000/27000 | 7.0/7.9 |
| TPEFYW027MA1W0A | 27000/30000 | 7.9/8.8 |
| TPEFYW030MA1W0A | 30000/34000 | 8.8/10.0 |
| TPEFYW036MA1W0A | 36000/40000 | 10.6/11.7 |
| TPEFYW048MA1W0A | 48000/54000 | 14.1/15.8 |

## [1] Components and Functions

1. Indoor (Main) Unit

(1) In case of rear inlet

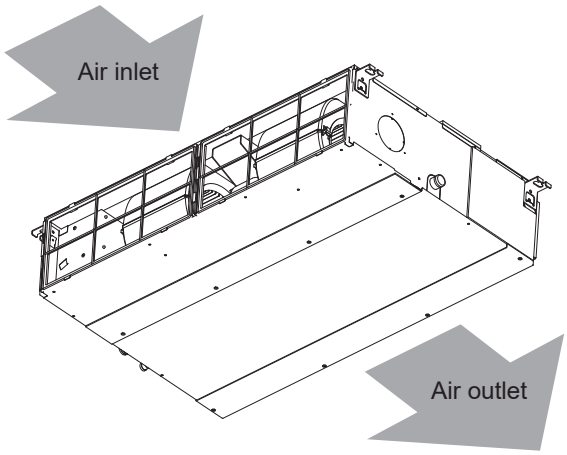


(2) In case of bottom inlet

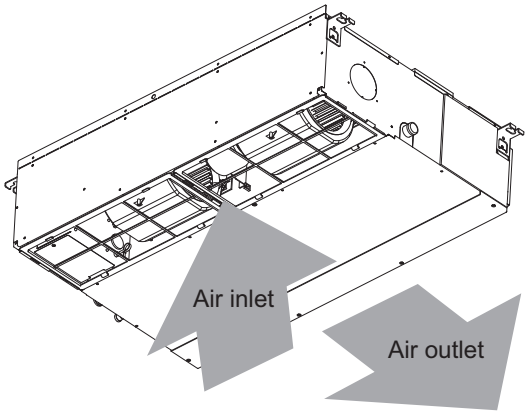

2. Remote Controller
[TAR-40MAAU]
Once the operation mode is selected, the unit will remain in the selected mode until changed.

(1) Remote Controller Interface

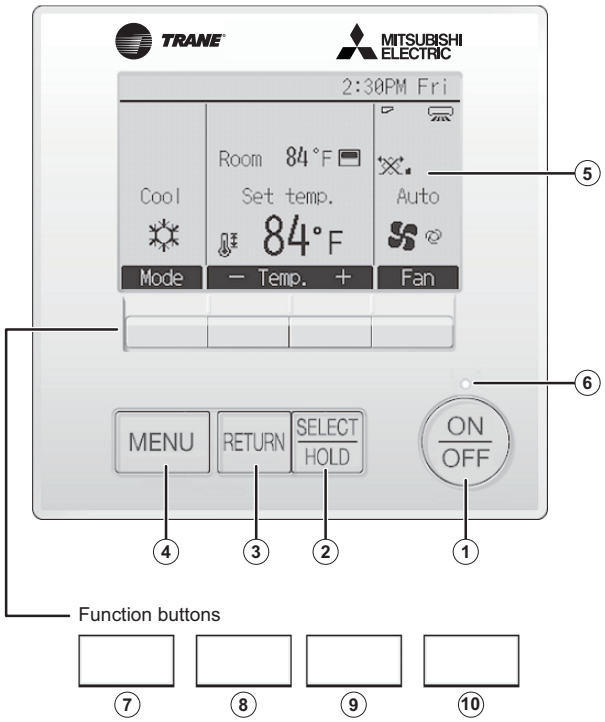


### ① [ON/OFF] button

Press to turn ON/OFF the indoor unit.

### ② [SELECT/HOLD] button

Press to save the setting.
When the Main menu is displayed, pressing this button will enable/disable the HOLD function.

### ③ [RETURN] button

Press to return to the previous screen.

### ④ [MENU] button

Press to bring up the Main menu.

### ⑤ Backlit LCD

Operation settings will appear.
When the backlight is off, pressing any button turns the backlight on and it will stay lit for a certain period of time depending on the screen.

When the backlight is off, pressing any button turns the backlight on and does not perform its function. (except for the [ON/OFF] button)

### ⑥ ON/OFF lamp

This lamp lights up in green while the unit is in operation. It blinks while the remote controller is starting up or when there is an error.

**The functions of the function buttons change depending on the screen. Refer to the button function guide that appears at the bottom of the LCD for the functions they serve on a given screen.**
**When the system is centrally controlled, the button function guide that corresponds to the locked button will not appear.**

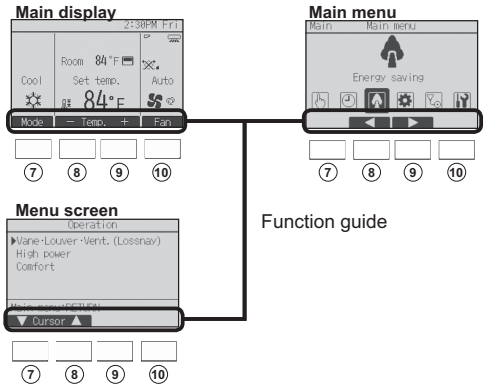


### ⑦ Function button [F1]

Main display: Press to change the operation mode.
Menu screen: The button function varies with the screen.

### ⑧ Function button [F2]

Main display: Press to decrease temperature.
Main menu: Press to move the cursor left.
Menu screen: The button function varies with the screen.

### ⑨ Function button [F3]

Main display: Press to increase temperature.
Main menu: Press to move the cursor right.
Menu screen: The button function varies with the screen.

### ⑩ Function button [F4]

Main display: Press to change the fan speed.
Menu screen: The button function varies with the screen.

## (2) Remote Controller Display

The main display can be displayed in two different modes: “Full” and “Basic.” The factory setting is “Full.” To switch to the “Basic” mode, change the setting on the Main display setting.

### Full mode

* All icons are displayed for explanation.

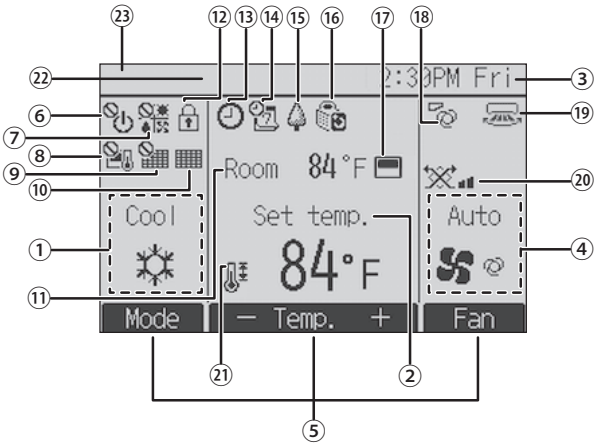


### Basic mode

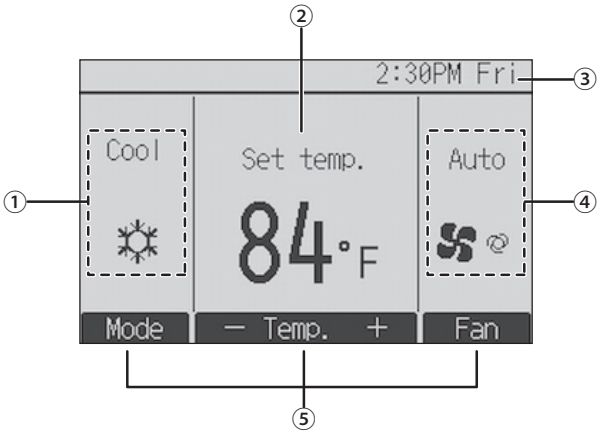


**① Operation mode**

Indoor unit operation mode appears here.

**② Set temperature**

Set temperature appears here.

**③ Clock**

Current time appears here.

**④ Fan speed**

Fan speed setting appears here.

**⑤ Button function guide**

Functions of the corresponding buttons appear here.

**⑥**

Appears when the ON/OFF operation is centrally controlled.

**⑦**

Appears when the operation mode is centrally controlled.

**⑧**

Appears when the set temperature is centrally controlled.

**⑨**

Appears when the filter reset function is centrally controlled.

**⑩**

Indicates when filter needs maintenance.

**⑪ Room temperature**

Current room temperature appears here.

**⑫**

Appears when the buttons are locked.

**⑬**

Appears when the On/Off timer or Auto-off timer function is enabled.

appears when the timer is disabled by the centralized control system.

appears when the HOLD function is enabled.

**⑭**

Appears when the Weekly timer is enabled.

**⑮**

Appears while the units are operated in the energy-save mode. (Will not appear on some models of indoor units)

**⑯**

Appears while the outdoor units are operated in the silent mode.

**⑰**

Appears when the built-in thermistor on the remote controller is activated to monitor the room temperature ( ⑪ ).

appears when the thermistor on the indoor unit is activated to monitor the room temperature.

**⑱**

Indicates the vane setting.

**⑲**

Indicates the louver setting.

**⑳**

Indicates the ventilation setting.

**㉑**

Appears when the set temperature range is restricted.

**㉒ Centrally controlled**

Appears for a certain period of time when a centrally-controlled item is operated.

**㉓ Error display**

An error code appears during the error.

* When an error code is displayed on the main display, an error is occurring but the indoor unit can keep its operation. If an error occurs, note the error code and consult your dealer.

Most settings (except ON/OFF, mode, fan speed, temperature) can be made from the Main menu.

# [1] Specifications

## 1. Specifications

| Model | | | | TPEFYW006MA1W0A | TPEFYW008MA1W0A | TPEFYW012MA1W0A | TPEFYW015MA1W0A |
|---|---|---|---|---|---|---|---|
| Power source | | | | 1-phase 208/230V 60Hz | | | |
| Cooling capacity (Nominal) | | *1 | BTU / h | 6,000 | 8,000 | 12,000 | 15,000 |
| | | *1 | kW | 1.8 | 2.3 | 3.5 | 4.4 |
| | Power input | *2 | kW | 0.042 | 0.042 | 0.052 | 0.062 |
| | Current input | *2 | A | 0.42/0.38 | 0.42/0.38 | 0.56/0.51 | 0.64/0.58 |
| Heating capacity (Nominal) | | *3 | BTU / h | 6,700 | 9,000 | 13,500 | 17,000 |
| | | *3 | kW | 2.0 | 2.6 | 4.0 | 5.0 |
| | Power input | *2 | kW | 0.040 | 0.040 | 0.050 | 0.060 |
| | Current input | *2 | A | 0.42/0.38 | 0.42/0.38 | 0.56/0.51 | 0.64/0.58 |
| External finish | | | | Galvanized steel plate | | | |
| External dimension H x W x D | | | in. | 9-7/8x27-9/16x28-7/8 | 9-7/8x27-9/16x28-7/8 | 9-7/8x27-9/16x28-7/8 | 9-7/8x35-7/16x28-7/8 |
| | | | mm | 250 x 700 x 732 | 250 x 700 x 732 | 250 x 700 x 732 | 250 x 900 x 732 |
| Net weight | | | lbs (kg) | 47(21) | 47(21) | 47(21) | 55(25) |
| Heat exchanger | | | | Cross fin (Aluminum fin and copper tube) | | | |
| | Water volume | | L | 0.9 | 0.9 | 0.9 | 1.2 |
| FAN | Type x Quantity | | | Sirocco fan x 1 | Sirocco fan x 1 | Sirocco fan x 1 | Sirocco fan x 2 |
| | External static press. | *4 | in.WG | <0.14>-0.20-<0.28>-<0.40>-<0.60> | | | |
| | | | Pa | <35>-50-<70>-<100>-<150> | | | |
| | Motor type | | | DC motor | | | |
| | Motor output | | kW | 0.085 | 0.085 | 0.085 | 0.121 |
| | Driving mechanism | | | Direct-driven by motor | | | |
| | Airflow rate (Low-Mid-High) | | cfm | 212-265-300 | 212-265-300 | 265-318-371 | 353-424-494 |
| | | | $m^3$ / min | 6.0-7.5-8.5 | 6.0-7.5-8.5 | 7.5-9.0-10.5 | 10.0-12.0-14.0 |
| | | | L / s | 100-125-142 | 100-125-142 | 125-150-175 | 167-200-233 |
| Sound pressure level (Low-Mid-High) (measured in anechoic room) | | *2 | dB <A> | 24-28-30 | 24-28-30 | 26-30-34 | 27-31-34 |
| Insulation material | | | | EPS, Polyethylene foam, Urethane foam | | | |
| Air filter | | | | PP honeycomb fabric | | | |
| Protection device | | | | Fuse | | | |
| Water piping diameter | | *5, 6 | | | | | |
| | Connection size | Inlet | mm O.D. | 22 | 22 | 22 | 22 |
| | | Outlet | mm O.D. | 22 | 22 | 22 | 22 |
| | Field pipe size | Inlet | mm I.D. | 20 | 20 | 20 | 20 |
| | | Outlet | mm I.D. | 20 | 20 | 20 | 20 |
| Field drain pipe size | | | in. (mm) | O.D. 1-1/4(32) | | | |
| Standard attachment | Document | | | Installation Manual, Instruction Book | | | |
| | Accessory | | | Washer, Drain hose, Tie band | | | |
| Optional parts | External heater adapter | | | PAC-YU25HT | | | |
| | Filter box | | | PAC-KE91TB-E | PAC-KE91TB-E | PAC-KE91TB-E | PAC-KE92TB-E |
| Remarks | Installation | | | Details on foundation work, duct work, insulation work, electrical wiring, power source switch, and other items shall be referred to the Installation Manual.<br>Due to continuing improvement, above specifications may be subject to change without notice. | | | |

Notes:

1. Nominal cooling conditions
   Indoor: 80°F D.B./67°F W.B. (26.7°C D.B./19.4°C W.B.), Outdoor: 95°F D.B. (35°C D.B.)
   Pipe length: 25 ft. (7.6 m), Level difference: 0 ft. (0 m)
2. The values are measured at the factory setting of external static pressure.
3. Nominal heating conditions
   Indoor: 70° F D.B. (21.1°C D.B.), Outdoor: 47°F D.B./43°FW.B. (8.3°C D.B./6.1°C W.B.)
   Pipe length: 25 ft. (7.6 m), Level difference: 0 ft. (0 m)
4. The factory setting of external static pressure is shown without < >.
   Refer to "Fan characteristics curves", according to the external static pressure, in DATA BOOK for the usable range of air flow rate.
5. Be sure to install a valve on the water inlet/outlet.
6. Install a strainer (40 mesh or more) on the pipe next to the valve to remove the foreign matters.

Unit converter

BTU/h =kW x 3,412
cfm =$m^3$/min x 35.31
lbs =kg/0.4536

*Above specification data is subject to rounding variation.

| Model | | | | TPEFYW018MA1W0A | TPEFYW024MA1W0A | TPEFYW027MA1W0A | TPEFYW030MA1W0A |
|---|---|---|---|---|---|---|---|
| Power source | | | | 1-phase 208/230V 60Hz | | | |
| Cooling capacity (Nominal) | | *1 | BTU / h | 18,000 | 24,000 | 27,000 | 30,000 |
| | | *1 | kW | 5.3 | 7.0 | 7.9 | 8.8 |
| | Power input | *2 | kW | 0.102 | 0.142 | 0.142 | 0.142 |
| | Current input | *2 | A | 0.98/0.89 | 1.24/1.12 | 1.24/1.12 | 1.24/1.12 |
| Heating capacity (Nominal) | | *3 | BTU / h | 20,000 | 27,000 | 30,000 | 34,000 |
| | | *3 | kW | 5.9 | 7.9 | 8.8 | 10.0 |
| | Power input | *2 | kW | 0.100 | 0.140 | 0.140 | 0.140 |
| | Current input | *2 | A | 0.98/0.89 | 1.24/1.12 | 1.24/1.12 | 1.24/1.12 |
| External finish | | | | Galvanized steel plate | | | |
| External dimension H x W x D | | | in. | 9-7/8x43-5/16x28-7/8 | 9-7/8x43-5/16x28-7/8 | 9-7/8x43-5/16x28-7/8 | 9-7/8x43-5/16x28-7/8 |
| | | | mm | 250 x 1100 x 732 | 250 x 1100 x 732 | 250 x 1100 x 732 | 250 x 1100 x 732 |
| Net weight | | | lbs (kg) | 67(30) | 67(30) | 67(30) | 67(30) |
| Heat exchanger | | | | Cross fin (Aluminum fin and copper tube) | | | |
| | Water volume | | L | 2.1 | 2.1 | 2.1 | 2.1 |
| FAN | Type x Quantity | | | Sirocco fan x 2 | Sirocco fan x 2 | Sirocco fan x 2 | Sirocco fan x 2 |
| | External static press. | *4 | in.WG | <0.14>-0.20-<0.28>-<0.40>-<0.60> | | | |
| | | | Pa | <35>-50-<70>-<100>-<150> | | | |
| | Motor type | | | DC motor | | | |
| | Motor output | | kW | 0.121 | 0.121 | 0.121 | 0.121 |
| | Driving mechanism | | | Direct-driven by motor | | | |
| | Airflow rate (Low-Mid-High) | | cfm | 512-636-742 | 618-742-883 | 618-742-883 | 618-742-883 |
| | | | $m^3$ / min | 14.5-18.0-21.0 | 17.5-21.0-25.0 | 17.5-21.0-25.0 | 17.5-21.0-25.0 |
| | | | L / s | 242-300-350 | 292-350-417 | 292-350-417 | 292-350-417 |
| Sound pressure level (Low-Mid-High) (measured in anechoic room) | | *2 | dB <A> | 29-33-37 | 31-35-39 | 31-35-39 | 31-35-39 |
| Insulation material | | | | EPS, Polyethylene foam, Urethane foam | | | |
| Air filter | | | | PP honeycomb fabric | | | |
| Protection device | | | | Fuse | | | |
| Water piping diameter | | *5, 6 | | | | | |
| | Connection size | Inlet | mm O.D. | 22 | 22 | 22 | 22 |
| | | Outlet | mm O.D. | 22 | 22 | 22 | 22 |
| | Field pipe size | Inlet | mm I.D. | 20 | 30 | 30 | 30 |
| | | Outlet | mm I.D. | 20 | 30 | 30 | 30 |
| Field drain pipe size | | | in. (mm) | O.D. 1-1/4(32) | | | |
| Standard attachment | Document | | | Installation Manual, Instruction Book | | | |
| | Accessory | | | Washer, Drain hose, Tie band | | | |
| Optional parts | External heater adapter | | | PAC-YU25HT | | | |
| | Filter box | | | PAC-KE93TB-E | PAC-KE93TB-E | PAC-KE93TB-E | PAC-KE93TB-E |
| Remarks | Installation | | | Details on foundation work, duct work, insulation work, electrical wiring, power source switch, and other items shall be referred to the Installation Manual.<br>Due to continuing improvement, above specifications may be subject to change without notice. | | | |

Notes:

1. Nominal cooling conditions
   Indoor: 80°F D.B./67°F W.B. (26.7°C D.B./19.4°C W.B.), Outdoor: 95°F D.B. (35°C D.B.)
   Pipe length: 25 ft. (7.6 m), Level difference: 0 ft. (0 m)
2. The values are measured at the factory setting of external static pressure.
3. Nominal heating conditions
   Indoor: 70°F D.B. (21.1°C D.B.), Outdoor: 47°F D.B./43°F W.B. (8.3°C D.B./6.1°C W.B.)
   Pipe length: 25 ft. (7.6 m), Level difference: 0 ft. (0 m)
4. The factory setting of external static pressure is shown without < >.
   Refer to "Fan characteristics curves", according to the external static pressure, in DATA BOOK for the usable range of air flow rate.
5. Be sure to install a valve on the water inlet/outlet.
6. Install a strainer (40 mesh or more) on the pipe next to the valve to remove the foreign matters.

Unit converter

BTU/h =kW x 3,412
cfm = $m^3$/min x 35.31
lbs = kg/0.4536

*Above specification data is subject to rounding variation.

| Model | | | | TPEFYW036MA1W0A | TPEFYW048MA1W0A |
|---|---|---|---|---|---|
| Power source | | | | 1-phase 208/230V 60Hz | |
| Cooling capacity (Nominal) | | *1 | BTU / h | 36,000 | 48,000 |
| | | *1 | kW | 10.6 | 14.1 |
| | Power input | *2 | kW | 0.222 | 0.252 |
| | Current input | *2 | A | 2.01/1.82 | 2.29/2.07 |
| Heating capacity (Nominal) | | *3 | BTU / h | 40,000 | 54,000 |
| | | *3 | kW | 11.7 | 15.8 |
| | Power input | *2 | kW | 0.220 | 0.250 |
| | Current input | *2 | A | 2.01/1.82 | 2.29/2.07 |
| External finish | | | | Galvanized steel plate | |
| External dimension H x W x D | | | in. | 9-7/8x55-1/8x28-7/8 | 9-7/8x63x28-7/8 |
| | | | mm | 250 x 1400 x 732 | 250 x 1600 x 732 |
| Net weight | | | lbs (kg) | 82(37) | 91(41) |
| Heat exchanger | | | | Cross fin (Aluminum fin and copper tube) | |
| | Water volume | | L | 2.7 | 3.7 |
| FAN | Type x Quantity | | | Sirocco fan x 3 | Sirocco fan x 3 |
| | External static press. | *4 | in.WG | <0.14>-0.20-<0.28>-<0.40>-<0.60> | |
| | | | Pa | <35>-50-<70>-<100>-<150> | |
| | Motor type | | | DC motor | |
| | Motor output | | kW | 0.300 | 0.300 |
| | Driving mechanism | | | Direct-driven by motor | |
| | Airflow rate (Low-Mid-High) | | cfm | 883-1077-1271 | 989-1201-1413 |
| | | | $m^3$ / min | 25.0-30.5-36.0 | 28.0-34.0-40.0 |
| | | | L / s | 417-508-600 | 467-567-667 |
| Sound pressure level (Low-Mid-High) (measured in anechoic room) | | *2 | dB <A> | 35-39-43 | 34-38-42 |
| Insulation material | | | | EPS, Polyethylene foam, Urethane foam | |
| Air filter | | | | PP honeycomb fabric | |
| Protection device | | | | Fuse | |
| Water piping diameter | | *5, 6 | | | |
| | Connection size | Inlet | mm O.D. | 22 | 22 |
| | | Outlet | mm O.D. | 22 | 22 |
| | Field pipe size | Inlet | mm I.D. | 30 | 30 |
| | | Outlet | mm I.D. | 30 | 30 |
| Field drain pipe size | | | in. (mm) | O.D. 1-1/4(32) | |
| Standard attachment | Document | | | Installation Manual, Instruction Book | |
| | Accessory | | | Washer, Drain hose, Tie band | |
| Optional parts | External heater adapter | | | PAC-YU25HT | |
| | Filter box | | | PAC-KE94TB-E | PAC-KE95TB-E |
| Remarks | Installation | | | Details on foundation work, duct work, insulation work, electrical wiring, power source switch, and other items shall be referred to the Installation Manual.<br>Due to continuing improvement, above specifications may be subject to change without notice. | |

Notes:

1. Nominal cooling conditions
   Indoor: 80°F D.B./67°F W.B. (26.7°C D.B./19.4°C W.B.), Outdoor: 95°F D.B. (35°C D.B.)
   Pipe length: 25 ft. (7.6 m), Level difference: 0 ft. (0 m)
2. The values are measured at the factory setting of external static pressure.
3. Nominal heating conditions
   Indoor: 70°F D.B. (21.1°C D.B.), Outdoor: 47°F D.B./43°F W.B. (8.3°C D.B./6.1°C W.B.)
   Pipe length: 25 ft. (7.6 m), Level difference: 0 ft. (0 m)
4. The factory setting of external static pressure is shown without < >.
   Refer to "Fan characteristics curves", according to the external static pressure, in DATA BOOK for the usable range of air flow rate.
5. Be sure to install a valve on the water inlet/outlet.
6. Install a strainer (40 mesh or more) on the pipe next to the valve to remove the foreign matters.

Unit converter

BTU/h =kW x 3,412
cfm = $m^3$/min x 35.31
lbs = kg/0.4536

*Above specification data is subject to rounding variation.

## 2. Electrical component specifications

| Component | Sym-bol | TPEFYW006MA1W0A | TPEFYW008MA1W0A | TPEFYW012MA1W0A |
|---|---|---|---|---|
| Room temperature thermistor | TH21 | Resistance 0°C/15kΩ, 10°C/9.6kΩ, 20°C/6.3kΩ, 25°C/5.4kΩ, 30°C/4.3kΩ, 40°C/3.0kΩ | | |
| Water inlet thermistor | TH22 | Resistance 0°C/15kΩ, 10°C/9.6kΩ, 20°C/6.3kΩ, 25°C/5.4kΩ, 30°C/4.3kΩ, 40°C/3.0kΩ | | |
| Water outlet thermistor | TH23 | Resistance 0°C/15kΩ, 10°C/9.6kΩ, 20°C/6.3kΩ, 25°C/5.4kΩ, 30°C/4.3kΩ, 40°C/3.0kΩ | | |
| Fuse | F1 | 250 VAC 6.3A | | |
| | F2 | 400 VDC 3A | | |
| Fan motor | MF | 8-pole, Output 85W ZWB278D51A | | |
| Linear expansion valve | LEV | 12 VDC Stepping motor (0~2000 pulse) | | |
| Power supply terminal block | TB2 | (L1, L2) 250V 20A | | |
| Transmission terminal block | TB5<br>TB15 | (1, 2) 250V 15A, (M1, M2, S) 250V 20A | | |
| Drain float switch | FS | Open/short detection<br>Initial contact resistance 500 mΩ or less | | |
| Drain pump | DP | PMD INPUT 3W (13 VDC) 24L/Hr | | |

| Component | Sym-bol | TPEFYW 015MA1W0A | TPEFYW 018MA1W0A | TPEFYW 024MA1W0A | TPEFYW 027MA1W0A | TPEFYW 030MA1W0A |
|---|---|---|---|---|---|---|
| Room temperature thermistor | TH21 | Resistance 0°C/15kΩ, 10°C/9.6kΩ, 20°C/6.3kΩ, 25°C/5.4kΩ, 30°C/4.3kΩ, 40°C/3.0kΩ | | | | |
| Water inlet thermistor | TH22 | Resistance 0°C/15kΩ, 10°C/9.6kΩ, 20°C/6.3kΩ, 25°C/5.4kΩ, 30°C/4.3kΩ, 40°C/3.0kΩ | | | | |
| Water outlet thermistor | TH23 | Resistance 0°C/15kΩ, 10°C/9.6kΩ, 20°C/6.3kΩ, 25°C/5.4kΩ, 30°C/4.3kΩ, 40°C/3.0kΩ | | | | |
| Fuse | F1 | 250 VAC 6.3A | | | | |
| | F2 | 400 VDC 3A | | | | |
| Fan motor | MF | 8-pole, Output 121W ZWB278D54A | | | | |
| Linear expansion valve | LEV | 12 VDC Stepping motor (0~2000 pulse) | | | | |
| Power supply terminal block | TB2 | (L1, L2) 250V 20A | | | | |
| Transmission terminal block | TB5<br>TB15 | (1, 2) 250V 15A, (M1, M2, S) 250V 20A | | | | |
| Drain float switch | FS | Open/short detection<br>Initial contact resistance 500 mΩ or less | | | | |
| Drain pump | DP | PMD INPUT 3W (13 VDC) 24L/Hr | | | | |

| Component | Sym-bol | TPEFYW036MA1W0A | TPEFYW048MA1W0A |
|---|---|---|---|
| Room temperature thermistor | TH21 | Resistance 0°C/15kΩ, 10°C/9.6kΩ, 20°C/6.3kΩ, 25°C/5.4kΩ, 30°C/4.3kΩ, 40°C/3.0kΩ | |
| Water inlet thermistor | TH22 | Resistance 0°C/15kΩ, 10°C/9.6kΩ, 20°C/6.3kΩ, 25°C/5.4kΩ, 30°C/4.3kΩ, 40°C/3.0kΩ | |
| Water outlet thermistor | TH23 | Resistance 0°C/15kΩ, 10°C/9.6kΩ, 20°C/6.3kΩ, 25°C/5.4kΩ, 30°C/4.3kΩ, 40°C/3.0kΩ | |
| Fuse | F1 | 250 VAC 6.3A | |
| | F2 | 400 VDC 3A | |
| Fan motor | MF | 10-pole, Output 300W ZWB3710D01A | |
| Linear expansion valve | LEV | 12 VDC Stepping motor (0~2000 pulse) | |
| Power supply terminal block | TB2 | (L1, L2) 250V 20A | |
| Transmission terminal block | TB5<br>TB15 | (1, 2) 250V 15A, (M1, M2, S) 250V 20A | |
| Drain float switch | FS | Open/short detection<br>Initial contact resistance 500 mΩ or less | |
| Drain pump | DP | PMD INPUT 3W (13 VDC) 24L/Hr | |

## [1] Outlines and Dimensions

1. TPEFYW006, 008, 012, 015, 018, 024, 027, 030, 036, 048MA1W0A

Unit: mm (in.)

Notes 1. Use an M10 screw for the suspension bolt (field supply).
2. Keep the service space for maintenance at the bottom.
3. This drawing is for TPEFYW018·024·027·030MA1W0A models, which have 2 fans. TPEFYW006·008·012MA1W0A models have 1 fan. TPEFYW015MA1W0A model have 2 fans. TPEFYW036·048MA1W0A models have 3 fans.
4. If the inlet duct is used, remove the air filter (supplied with the unit), then install the filter (field supply) at the suction side.
5. Heat air to 0° (32°F) or higher when taking fresh air with a fresh air intake.

Unit: mm

| Model | ① Water pipe from HBC unit | ② Water pipe to HBC unit |
|---|---|---|
| TPEFYW006,008,012MA1W0A | ø22.0 | |
| TPEFYW015MA1W0A | | |
| TPEFYW018,024,027,030MA1W0A | | |
| TPEFYW036MA1W0A | | |
| TPEFYW048MA1W0A | | |

Unit: mm(in.)

| Model | A | B | C | D | E | F | G |
|---|---|---|---|---|---|---|---|
| TPEFYW006,008,012MA1W0A | 700 (27-9/16) | 754 (29-11/16) | 800 (31-1/2) | 660 (26) | 7 | 600 (23-5/8) | 658 (25-15/16) |
| TPEFYW015MA1W0A | 900 (35-7/16) | 954 (37-9/16) | 1000 (39-3/8) | 860 (33-7/8) | 9 | 800 (31-1/2) | 858 (33-13/16) |
| TPEFYW018,024,027,030MA1W0A | 1100 (43-5/16) | 1154 (45-7/16) | 1200 (47-1/4) | 1060 (41-3/4) | 11 | 1000 (39-3/8) | 1058 (41-11/16) |
| TPEFYW036MA1W0A | 1400 (55-1/8) | 1454 (57-1/4) | 1500 (59-1/16) | 1360 (53-9/16) | 14 | 1300 (51-3/16) | 1358 (53-1/2) |
| TPEFYW048MA1W0A | 1600 (63) | 1654 (65-1/8) | 1700 (66-15/16) | 1560 (61-7/16) | 16 | 1500 (59-1/16) | 1558 (61-3/8) |

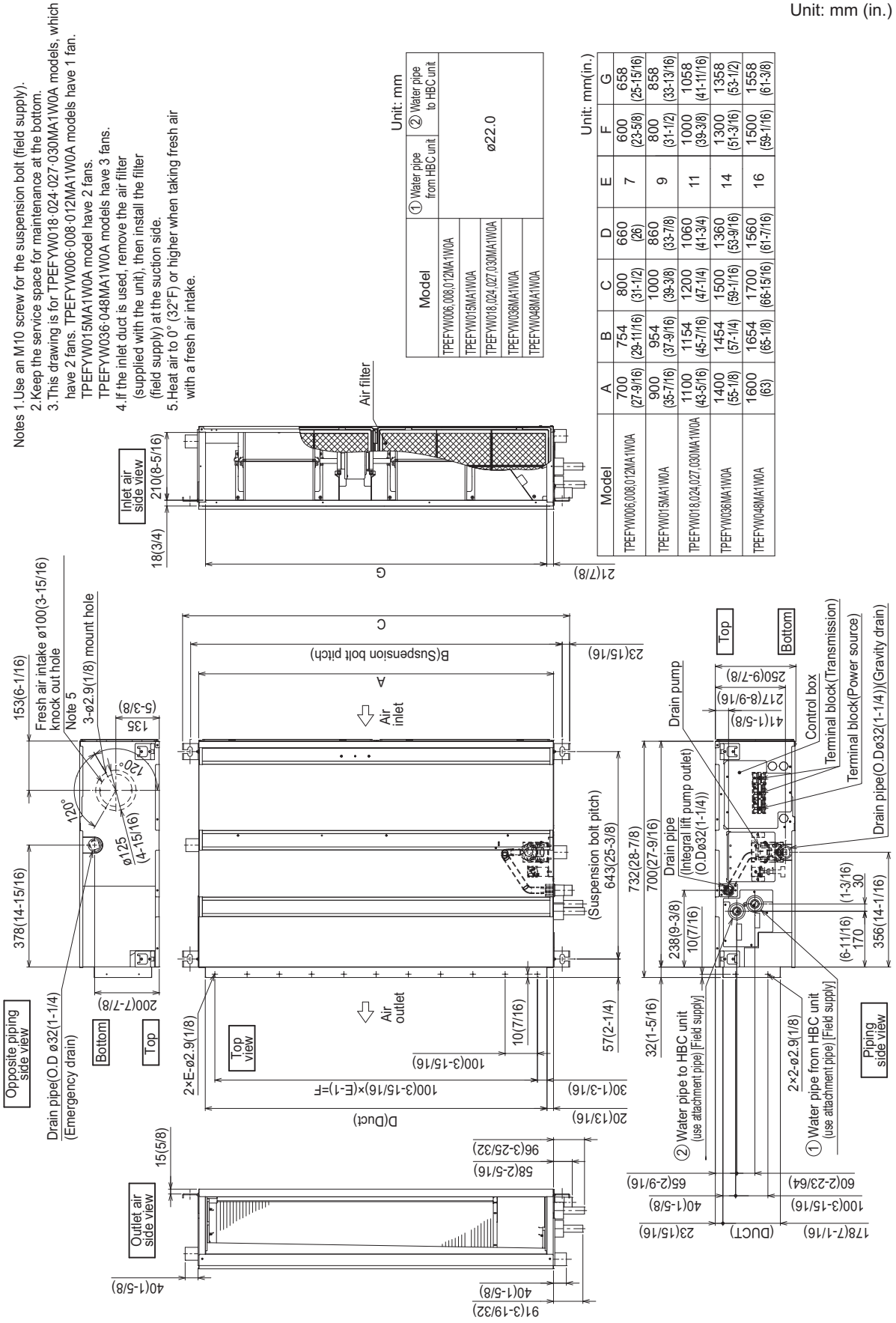

[Maintenance access space]
Secure enough access space to allow for the maintenance, inspection, and replacement of the motor, fan, drain pump, heat exchanger, and control box in one of the following ways.
Select an installation site for the indoor unit so that it's maintenance access space will not be obstructed by beams or other objects.

(1) When a space of 300mm or more is available below the unit between the unit and the ceiling. (Fig.1)
·Create access door 1 and 2 (450×450mm each) as shown in Fig.2.
(Access door 2 is not required if enough space is available below the unit for a maintenance worker to work in.)

(2) When a space of less than 300mm is available below the unit between the unit and the ceiling.
(At least 20mm of space should be left below the unit as shown in Fig.3.)
·Create access door 1 diagonally below the control box and access door 3 below the unit as shown in Fig.4.
or
·Create access door 4 below the control box and the unit as shown in Fig.5.

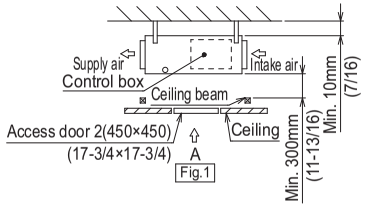

Fig.1

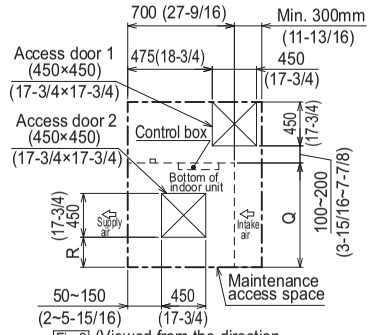

Fig.2 (Viewed from the direction of the arrow A)

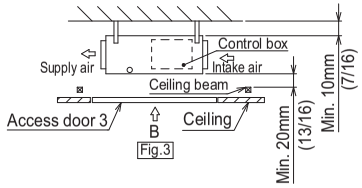

Fig.3

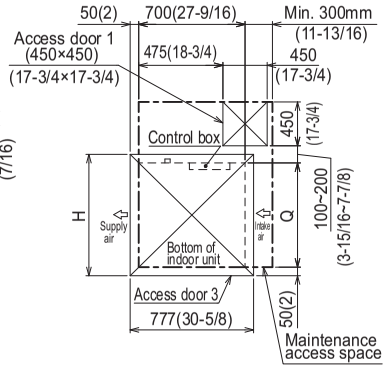

Fig.4 (Viewed from the direction of the arrow B)

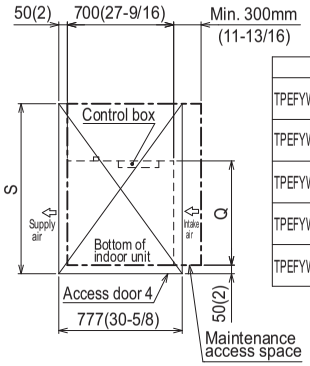

Fig.5 (Viewed from the direction of the arrow B)

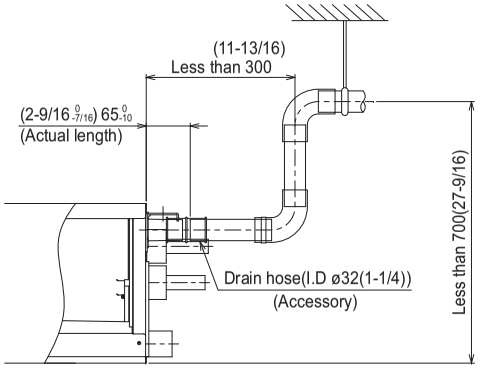


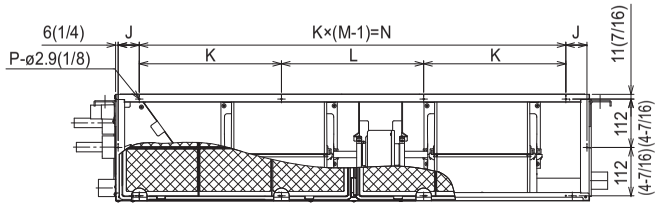


Unit: mm (in.)

| Model | H | J | K | L | M | N | P | Q | R | S |
|---|---|---|---|---|---|---|---|---|---|---|
| TPEFYW006,008,012MA1W0A | 800 (31-1/2) | 44 (1-3/4) | 150 (5-15/16) | 300 (11-13/16) | | | 10 | 700 (27-9/16) | 50~150 (2)~(5-15/16) | 1300 (51-3/16) |
| TPEFYW015MA1W0A | 1000 (39-3/8) | 54 (2-3/16) | 260 (10-1/4) | | 4 | 780 (30-3/4) | 10 | 900 (35-7/16) | 150~250 (5-15/16)~(9-7/8) | 1500 (59-1/16) |
| TPEFYW018,024,027,030MA1W0A | 1200 (47-1/4) | 49 (1-15/16) | 330 (13) | | 4 | 990 (39) | 10 | 1100 (43-5/16) | 250~350 (9-7/8)~(13-13/16) | 1700 (66-15/16) |
| TPEFYW036MA1W0A | 1500 (59-1/16) | 54 (2-3/16) | 320 (12-5/8) | | 5 | 1280 (50-7/16) | 12 | 1400 (55-1/8) | 400~500 (15-3/4)~(19-11/16) | 2000 (78-3/4) |
| TPEFYW048MA1W0A | 1700 (66-15/16) | 54 (2-3/16) | 370 (14-5/8) | | 5 | 1480 (58-5/16) | 12 | 1600 (63) | 500~600 (19-11/16)~(23-5/8) | 2200 (86-5/8) |

## [1] Wiring Diagram

1. TPEFYW006, 008, 012, 015, 018, 024, 027, 030, 036, 048MA1W0A

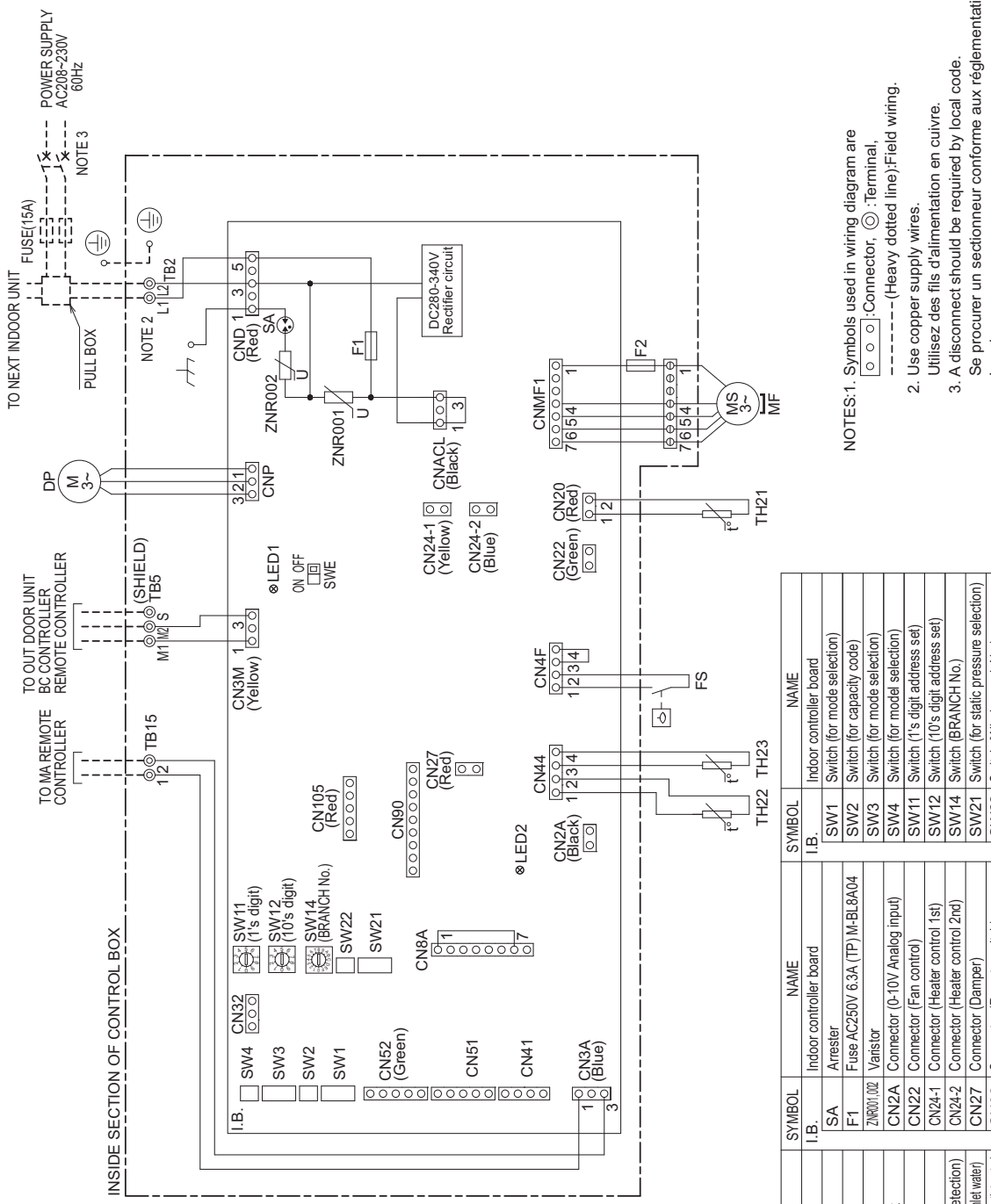


NOTES:1. Symbols used in wiring diagram are
:Connector, :Terminal,
- - - - - - (Heavy dotted line):Field wiring.
2. Use copper supply wires.
Utilisez des fils d'alimentation en cuivre.
3. A disconnect should be required by local code.
Se procurer un sectionneur conforme aux réglementations Locales.

### SYMBOL EXPLANATION

| SYMBOL | NAME |
|---|---|
| DP | Drain Pump |
| F2 | Fuse DC400V 3A SHV11 |
| FS | Float switch |
| MF | Fan Motor |
| TB2 | Power source terminal block |
| TB5 | Transmission terminal block |
| TB15 | Transmission terminal block |
| TH21 | Thermistor (inlet air temp. detection) |
| TH22 | Thermistor (piping temp.detection/inlet water) |
| TH23 | Thermistor (piping temp.detection/outlet water) |

| SYMBOL | NAME |
|---|---|
| I.B. | Indoor controller board |
| SA | Arrester |
| F1 | Fuse AC250V 6.3A (TP) M-BL8A04 |
| ZNR001,002 | Varistor |
| CN2A | Connector (0-10V Analog input) |
| CN22 | Connector (Fan control) |
| CN24-1 | Connector (Heater control 1st) |
| CN24-2 | Connector (Heater control 2nd) |
| CN27 | Connector (Damper) |
| CN32 | Connector (Remote switch) |
| CN41 | Connector (HA terminal-A) |
| CN51 | Connector (Centrally control) |
| CN52 | Connector (Remote indication) |
| CN90 | Connector (Wireless) |
| CN105 | Connector (IT terminal) |

| SYMBOL | NAME |
|---|---|
| I.B. | Indoor controller board |
| SW1 | Switch (for mode selection) |
| SW2 | Switch (for capacity code) |
| SW3 | Switch (for mode selection) |
| SW4 | Switch (for model selection) |
| SW11 | Switch (1's digit address set) |
| SW12 | Switch (10's digit address set) |
| SW14 | Switch (BRANCH No.) |
| SW21 | Switch (for static pressure selection) |
| SW22 | Switch (Wireless pair No.) |
| SWE | Connector (emergency operation) |
| LED1 | LED(Power supply) |
| LED2 | LED(Remote controller supply) |

## [1] Water System Diagram

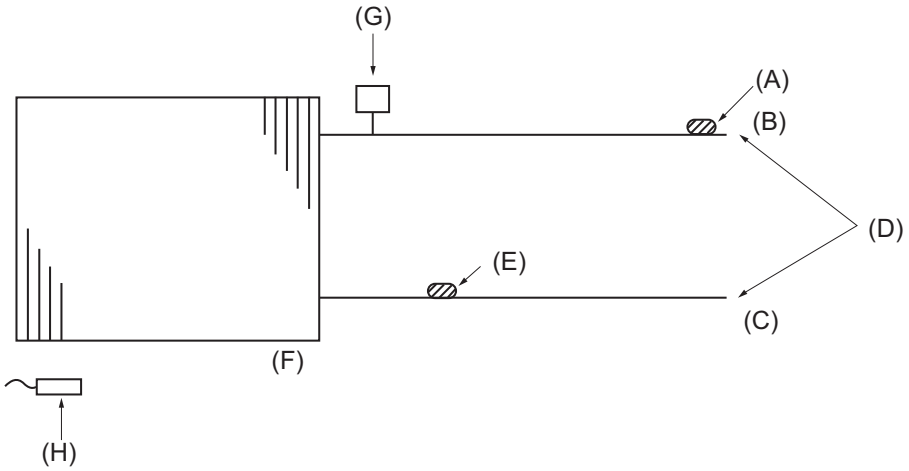


(A) Water outlet thermistor TH23

(B) Water outlet

(C) Water inlet

(D) Connections

(E) Water inlet thermistor TH22

(F) Heat exchanger

(G) Manual air purge valve

(H) Room temperature thermistor TH21

| | | | | TPEFYW 006, 008, 012, 015, 018 MA1W0A | TPEFYW 024, 027, 030, 036, 048 MA1W0A |
|---|---|---|---|---|---|
| Water piping diameter | Connection size | Inlet | mm O.D. | 22 | 22 |
| | | Outlet | mm O.D. | 22 | 22 |
| | Field pipe size | Inlet | mm I.D. | 20 | 30 |
| | | Outlet | mm I.D. | 20 | 30 |

## [1] Microprocessor Control

### 1. Cool operation

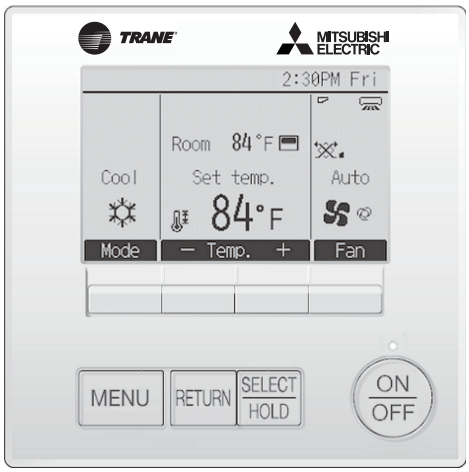


**<How to operate>**

1. Press POWER [ON/OFF] button.
2. Press the [F1] button to display Cool.
3. Press the [F2] or [F3] button to set the desired temperature.

**Note**

The set temperature changes 2°F when the [F2] or [F3] button is pressed one time. Cooling 67 to 87°F

1. Termoregulating function

(1) Thermoregulating function (Function to prevent restarting for 3 minutes)

- Room temperature ≥ desired temperature + 2°F ···Thermo ON
- Room temperature ≤ desired temperature ···Thermo OFF

(2) Anti-freezing control (Frost Prevention control of indoor unit)

- Detected condition:

When BOTH conditions 1 and 2 have been meet, the indoor LEV will close to minimum Thermo OFF* position until released.

1) Indoor unit has been Thermo ON* in Cool/Dry mode for at least 16 min.
2) When the water inlet temp (TH22) or water outlet temp (TH23) is 33.8°F or less, continuously for 3 min.

- Released condition:

Anti-freezing control is cancelled when ANY one of the following conditions is satisfied, and an additional 3 minutes have passed.

1) Water inlet temp (TH22) and water outlet temp (TH23) are 50°F or above continuously for 1 min.
2) The condition of the Thermo OFF* has become complete by thermal-regulating (unit satisfies by set point).
3) The operation mode becomes a mode other than COOL or Dry.
4) The operation is stopped (unit is turned off).
5) Three min have passed from start of anti-freezing control.

*Thermo OFF = The IC coil is not actively cooling or heating.
*Thermo ON = The IC coil is actively cooling or heating.

Example:

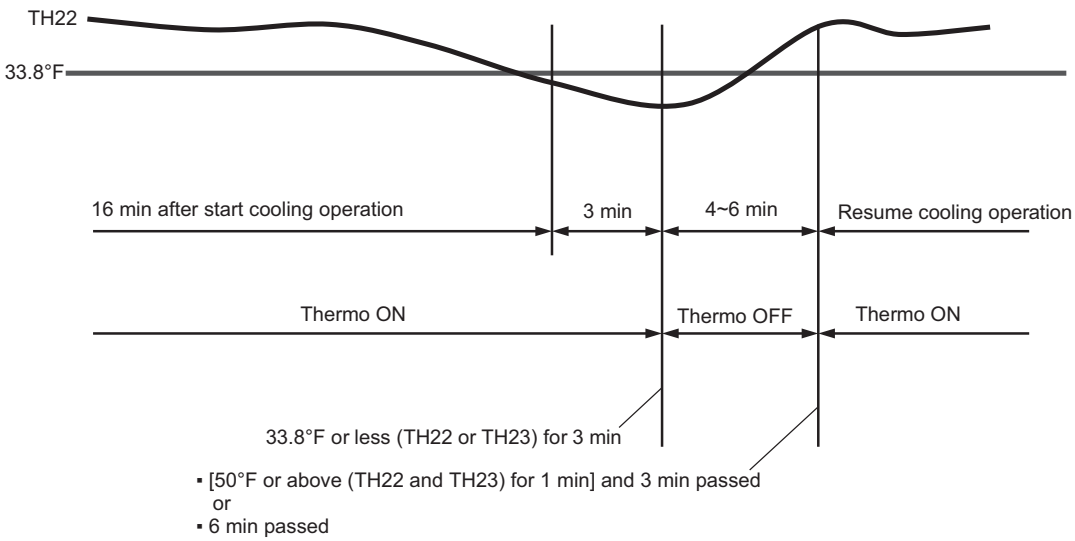

2. Fan

(1) By the remote controller setting (switch of 3 speeds+Auto)

| Type | Fan speed notch |
|---|---|
| 3 speeds + Auto type | [Low], [Mid], [High], [Auto] |

- When [Auto] is set, fan speed is changed depending on the value of: Room temperature - Desired temperature

3. Drain pump

(1) Drain pump control

- Always drain pump ON during the Cool and Drying mode operation. (Regardless of the thermo ON/ OFF)
- When the operation mode has changed from the Cool or Drying to the others (including Stop), OFF the control after the drain pump ON for 3 minutes.

(2) Float switch control

- Float switch control judges whether the sensor is in the air or in the water by turning the float switch ON/OFF.

In the water : Detected that the float switch is ON for 15 seconds.
In the air : Detected that the float switch is OFF for 15 seconds.

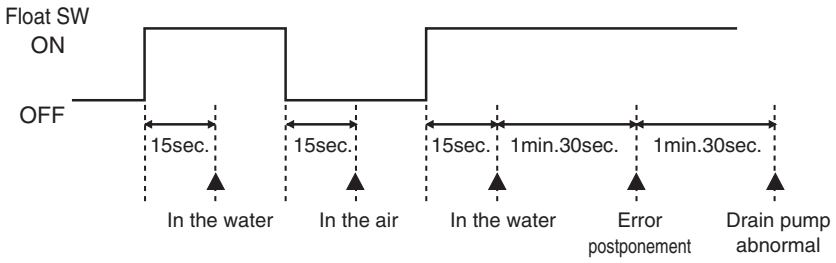

## 2. Drying operation

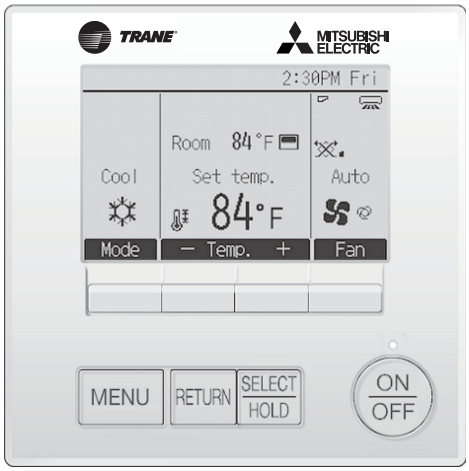


**<How to operate>**

1. Press POWER [ON/OFF] button.
2. Press the [F1] button to display Drying.
3. Press the [F2] or [F3] button to set the desired temperature.

**Note**

The set temperature changes 2°F when the [F2] or [F3] button is pressed one time. Drying 67 to 87°F

1. Termoregulating function

(1) Thermo regulating function (Function to prevent restarting for 3 minutes)

- Setting the Dry thermo by the thermo regulating signal and the room temperature (TH21).

Dry thermo ON Room temperature ≥ desired temperature + 2°F
Dry thermo OFF Room temperature ≤ desired temperature

| Room temperature | 3 min. passed since starting operation | | Dry thermo ON time (min) | Dry thermo OFF time (min) |
|---|---|---|---|---|
| | Thermo regulating signal | Room temperature (T1) | | |
| Over 64°F | ON | T1 ≥ 83°F | 9 | 3 |
| | | 83°F > T1 ≥ 79°F | 7 | 3 |
| | | 79°F > T1 ≥ 75°F | 5 | 3 |
| | | 75°F > T1 | 3 | 3 |
| | OFF | Unconditional | 3 | 10 |
| Less than 64°F | Dry thermo OFF | | | |

(2) Frozen prevention control

- No control function

2. Fan

(1) Indoor fan operation controlled depends on the compressor conditions.

| Dry thermo | Fan speed notch | |
|---|---|---|
| ON | [Low] | |
| OFF | Excluding the following | Stop |
| | Room temp. < 64°F | [Low] |

**Note**

Remote controller setting is not acceptable.

3. Drain pump

(1) Same control as Cool operation

## 3. Fan operation

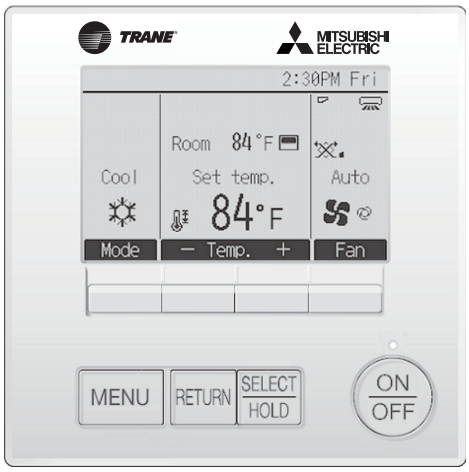


**<How to operate>**

1. Press POWER [ON/OFF] button.
2. Press the [F4] button to display Fan.

1. Fan

(1) Set by remote controller.

| Type | Fan speed notch |
|---|---|
| 3 speeds + Auto type | [Low], [Mid], [High], [Auto] |

♦When [Auto] is set, fan speed becomes [Low].

2. Drain pump

(1) Drain pump control

♦The drain pump turns ON for the specified amount of time when any of the following conditions is met:

1) ON for 3 minutes after the operation mode is switched from Cool or Drying to another operation mode (Fan).
2) ON for 6 minutes after the float switch is submerged in the water when the float switch control judges the sensor is in the water.

(2) Float switch control

♦Float switch control judges whether the sensor is in the air or in the water by turning the float switch ON/OFF.
In the water : Detected that the float switch is ON for 15 seconds.
In the air : Detected that the float switch is OFF for 15 seconds.

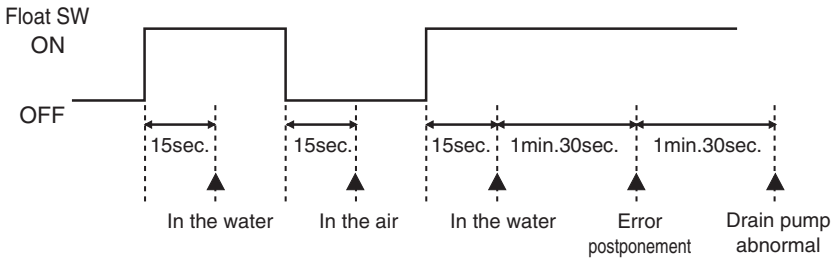

## 4. Heat operation

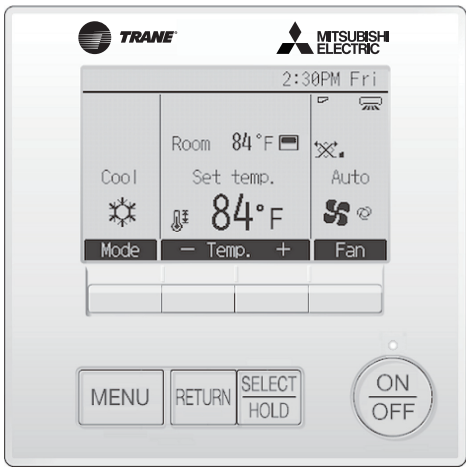


**<How to operate>**

1. Press POWER [ON/OFF] button.
2. Press the [F1] button to display Heat.
3. Press the [F2] or [F3] button to set the desired temperature.

**Note**

The set temperature changes 2°F when the [F2] or [F3] button is pressed one time. Heating 63 to 83°F.

**<Display in Heat operation>**

[DEFROST]
The [DEFROST] symbol is only displayed during the defrost operation.
[STANDBY]
The [STANDBY] symbol is only displayed during the hot adjust mode.

1. Termoregulating function

(1) Thermoregulating function (Function to prevent restarting for 3 minutes)

- Room temperature ≤ desired temperature -2°F …Thermo ON
- Room temperature ≥ desired temperature …Thermo OFF

2. Fan

(1) By the remote controller setting (switch of 3 speeds+Auto)

| Type | Fan speed notch |
|---|---|
| 3 speeds + Auto type | [Low], [Mid], [High], [Auto] |

- When [Auto] is set, fan speed is changed depending on the value of:
  Desired temperature - Room temperature
  Give priority to under-mentioned controlled mode

1) Hot adjust mode
2) Preheating exclusion mode
3) Thermo OFF mode (When the compressor off by the thermoregulating)
4) Cool air prevention mode (Defrosting mode)
5) Capacity increasing mode

(2) Hot adjust mode

- The fan controller becomes the hot adjuster mode for the following conditions.

1) When starting the Heat operation
2) When the thermoregulating function changes from OFF to ON.
3) When release the Heat defrosting operation

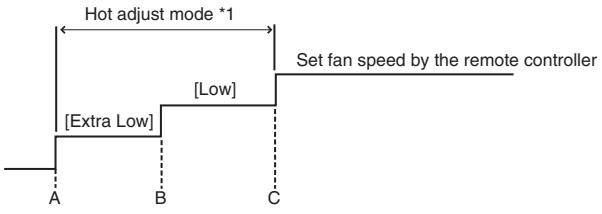


A: Hot adjust mode starts.
B: 5 minutes have passed since the condition A or the indoor water outlet pipe temperature turned 95°F or more.
C: 2 minutes have passed since the condition A. (Terminating the hot adjust mode)

**Note**

*1 "STAND BY" will be displayed during the hot adjust mode.

(3) Preheating exclusion mode

- When the condition changes the auxiliary heater ON to OFF (thermoregulating or operation stop, etc.), the indoor fan operates in [Low] mode for 1 minute.

**Note**

This control is same for the model without auxiliary heater.

(4) Thermo OFF mode

- When the thermoregulating function changes to OFF, the indoor fan operates in [Extra low].

(5) Heat defrosting mode

- The indoor fan stops.

3. Drain pump

(1) Drain pump control

- The drain pump turns ON for the specified amount of time when any of the following conditions is met:

1) ON for 3 minutes after the operation mode is switched from Cool or Drying to another operation mode (Fan).
2) ON for 6 minutes after the float switch is submerged in the water when the float swich control judges the sensor is in the water.

(2) Float switch control

- Float switch control judges whether the sensor is in the air or in the water by turning the float switch ON/OFF.

In the water : Detected that the float switch is ON for 15 seconds.
In the air : Detected that the float switch is OFF for 15 seconds.

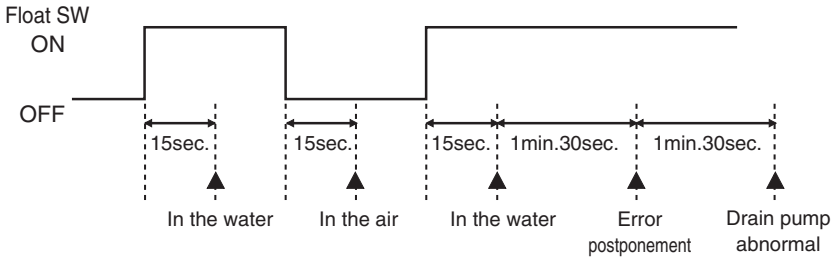


## 5. Auto operation [Automatic Cool / Heat change over operation]

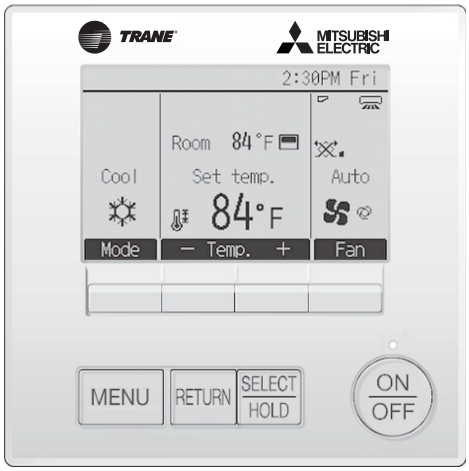


**<How to operate>**

1. Press POWER [ON/OFF] button.
2. Press the [F1] button to display Auto.
3. Press the [F2] or [F3] button to set the desired temperature.

**Note**

The set temperature changes 2°F when the [F2] or [F3] button is pressed one time. Automatic 67 to 83°F

1. Initial value of operation mode

(1) Heat mode for room temperature < Desired temperature
(2) Cool mode for room temperature ≥ Desired temperature

2. Mode change

(1) Heat mode -> Cool mode
Room temperature ≥ Desired temperature + 3°F. or 3 min. has passed
(2) Cool mode -> Heat mode
Room temperature ≤ Desired temperature - 3°F. or 3 min. has passed

3. Cool mode

(1) Same control as Cool operation

4. Heat mode

(1) Same control as heat operation
The value "3°F" is modifiable from 1.8°F to 9°F by maintenance tool.

## 6. When unit is stopped control mode

1. Drain pump

(1) Drain pump control

♦The drain pump turns ON for the specified amount of time when any of the following conditions is met:

1) ON for 3 minutes after the operation mode is switched from Cool or Drying to another operation mode (Fan).
2) ON for 6 minutes after the float switch is submerged in the water when the float switch control judges the sensor is in the water.

(2) Float switch control

♦Float switch control judges whether the sensor is in the air or in the water by turning the float switch ON/OFF.
In the water : Detected that the float switch is ON for 15 seconds.
In the air : Detected that the float switch is OFF for 15 seconds.

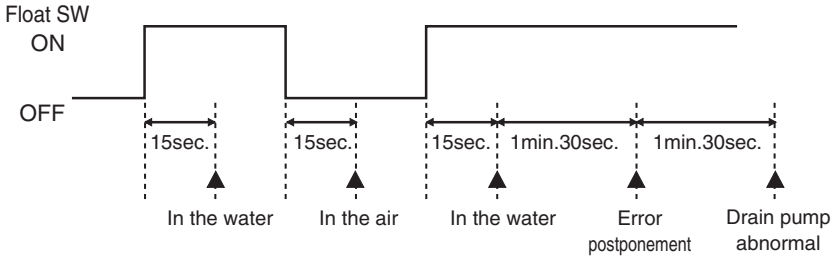


## 7. Heater control

1. Control specifications and DIP S/W setting

♦Table 1 shows the function settings the field-installed heater. Select the desired pattern in the table below, and set the DIP SW on the outdoor and indoor units as shown in Table 1.

Table.1

| Outdoor unit setting | Condition of outdoor unit | | TPEFYW-MA1W0A | | | | |
|---|---|---|---|---|---|---|---|
| | | | DIP S/W (Indoor unit)*1 | | Heater control | | |
| | | | SW3-2 | SW3-4 | Pattern | Defrost | Error |
| DIP S/W OFF *3 | N / A | | OFF | - | Heater not Available | | |
| | | | ON | OFF | Heater Available | OFF | OFF |
| | | | ON | ON | Heater Available | ON | ON*2 |
| DIP S/W ON *3 | 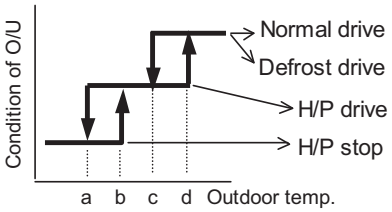  Parameters a/b/c/d are set by maintenance tool. | Normal drive | OFF | - | Heater not Available | | |
| | | | ON | OFF | Heater Available | OFF | OFF |
| | | | ON | ON | Heater Available | ON | ON*2 |
| | | Defrost drive H/P drive H/P stop | OFF | - | Heater not Available | | |
| | | | ON | OFF | Heater Available | OFF | OFF |
| | | | ON | ON | Heater Available | ON | ON*2 |

*1 Default settings: SW3-2 OFF, SW3-4 OFF
*2 Heater will not operate during all error modes.
*3 Please set function codes that are shown on outdoor unit service manuals (DIP S/W Functions).
*4 Heater On signal can not be output in the following cases for safety reasons.
- Return air temperature sensor fault (Error code: 5101)
- Indoor unit fan operation error (Error code: 4109)
- Indoor unit fan motor error (Error code: 4114)
- Transmission error (Error code: 6***, 7***)
- When heating mode is prohibited
- When demand control or capacity save is set to 0%
- During refrigerant recovery mode on PUMY system
- For a few minutes when change from thermo OFF to ON or ON to OFF in R2/WR2 system

♦Table 2 shows how the field-installed heater is controlled.

Table.2 [Heater Control Table]

| Mode Change | Condition | | | | |
|---|---|---|---|---|---|
| EH1 ON | (To -$T_{RA}$) > 2.7 °F [1.5 °C] | AND | $T_{RA}$ has not increased by 0.9 °F [0.5°C] in X min | | |
| EH2 ON | EH1 ON for > 5 min | AND | (To -$T_{RA}$) > 2.7 °F [1.5 °C] | AND | $T_{RA}$ has not increased by 0.9 °F [0.5°C] in 5 min |
| EH1 OFF | (To -$T_{RA}$) ≤ 0.9 °F [0.5 °C] | | | | |
| EH2 OFF | | | | | |

KEY
- EH1: Electric Heater 1
- EH2: Electric Heater 2
- To: Set point temperature
- $T_{RA}$: Return Air temperature
- X: Time delay (Selectable. Default is 20 min. Selectable to 10, 15, or 25 min)

♦Table 3 shows how the time delay is selected.

Table.3 [Time Delay Selection Table]

| Function Setting *1 | Action *3 |
|---|---|
| 108-1 | Set Time Delay to 10 minutes |
| 108-2 | Set Time Delay to 15 minutes |
| 108-3 | Set Time Delay to 20 minutes *2 |
| 108-4 | Set Time Delay to 25 minutes |

*1 Time delay can only be selected with MA controller. If use of a non-MA controller is desired, the time delay must first be selected with the MA controller. Then the non-MA controller can be attached and used.

*2 The default time delay setting is 20 minutes.

*3 Time delays are approximate.

•Chart 1 and Table 4 show an example of heater operation.

Chart 1 [Heater Operation Example]

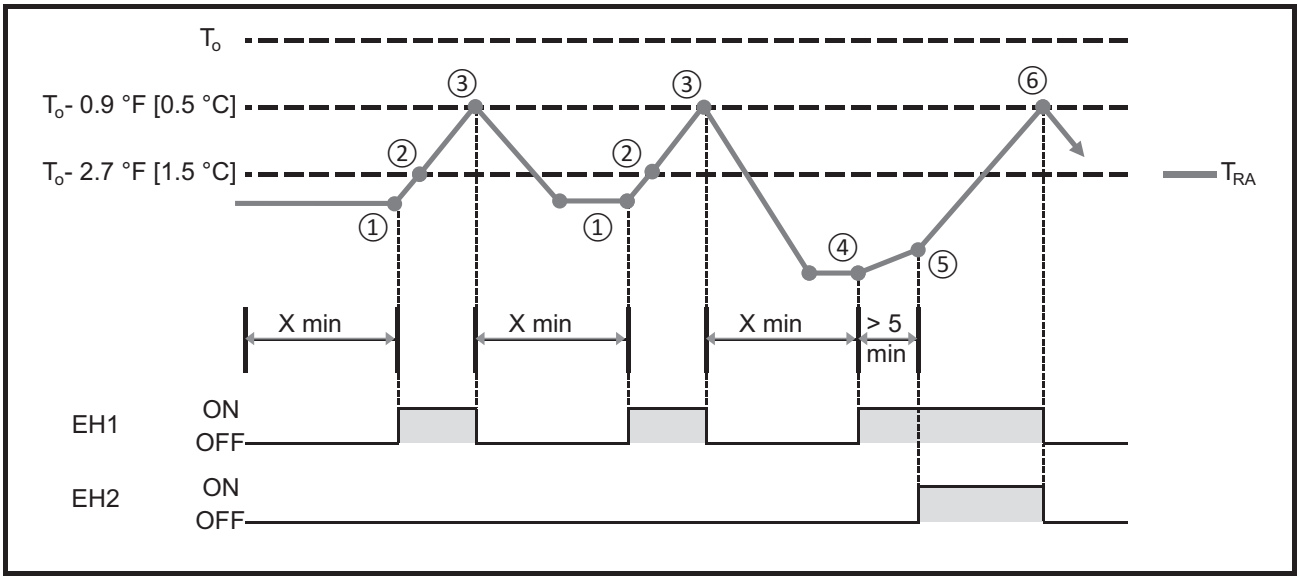


Table.4 [Heater Operation Example]

| Step | Condition | | | Result |
|---|---|---|---|---|
| ① | (To -$T_{RA}$) > 2.7 °F [1.5 °C] | AND | $T_{RA}$ has not increased by 0.9 °F [0.5°C] in X min | EH1 ON |
| ② | (To -$T_{RA}$) ≤ 2.7 °F [1.5 °C] | AND | $T_{RA}$ increasing faster than 0.9 °F [0.5°C] in 5 min | EH2 not ON |
| ③ | (To -$T_{RA}$) ≤ 0.9 °F [0.5°C] | | | EH1 OFF |
| ④ | (To -$T_{RA}$) > 2.7 °F [1.5 °C] | AND | $T_{RA}$ has not increased by 0.9 °F [0.5°C] in X min | EH1 ON |
| ⑤ | (To -$T_{RA}$) > 2.7 °F [1.5 °C] | AND | $T_{RA}$ not increasing faster than 0.9 °F [0.5°C] in 5 min | EH2 ON |
| ⑥ | (To -$T_{RA}$) ≤ 0.9 °F [0.5°C] | | | EH1 OFF<br>EH2 OFF |

♦Chart 2 show how heater is on.

The software has the function to turn on electric heater 5 minutes after turning on remote controller in case that outdoor unit cannot operate in heating mode because the system is in cooling priority mode. This function is available when function setting No.123 is set to “2”.

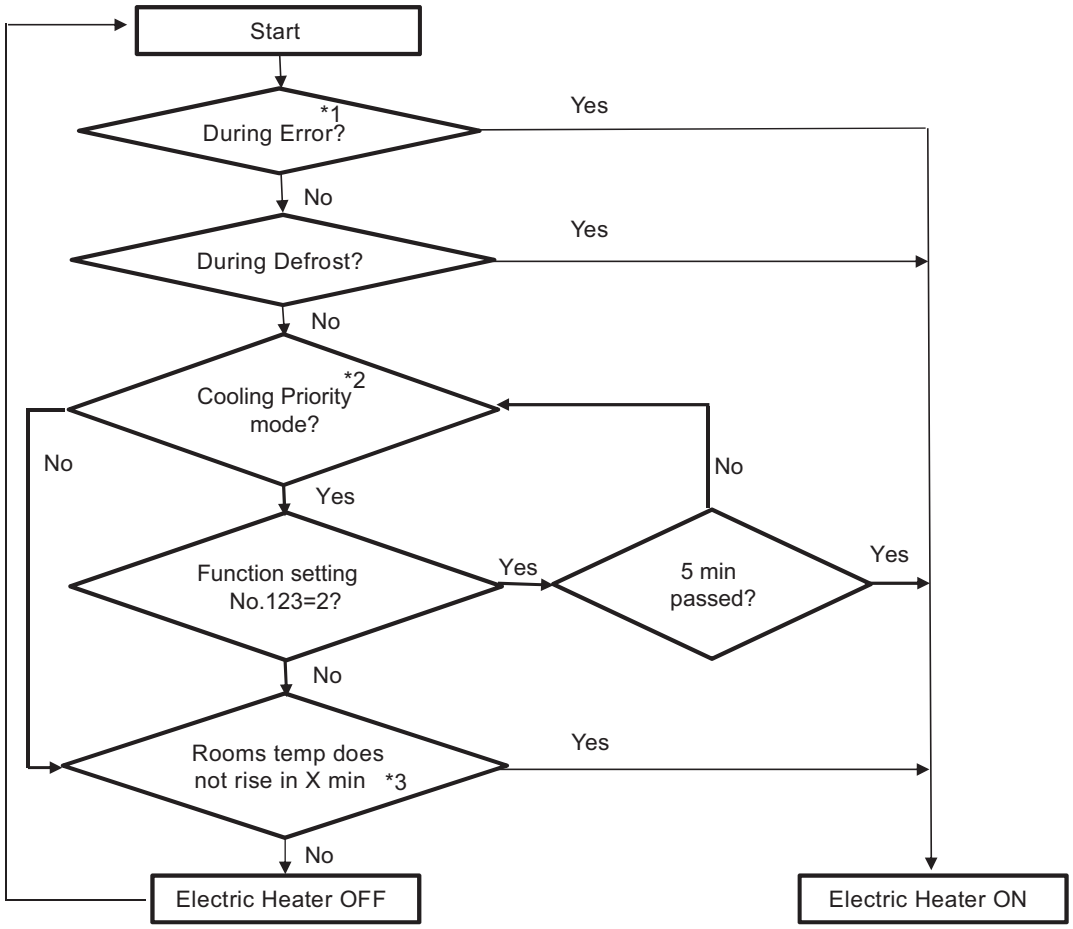


*1. The heater will not turn on in the error of TH1 thermistor or fan motor.
*2. See WT06231 for the details of this function.
*3. X (time delay) default is 20 min and changeable by function setting, see Table 3.

**Note**

(1) Turning on the heater with the fan setting set to OFF requires that the DIP S/W and connectors on the indoor units are set on site.

Fan control

<table>
<tr><th rowspan="2">Pattern</th><th rowspan="2">CN22 for FAN control (PAC-YU25HT)</th><th rowspan="2">DIP SW3-2 (Indoor unit)</th><th rowspan="2">DIP SW3-4 (Indoor unit)</th><th colspan="2">in error *1 *5</th><th colspan="2">in defrost</th><th colspan="2">All modes other than defrost and error</th></tr>
<tr><th>Fan</th><th>Heater</th><th>Fan</th><th>Heater</th><th>Fan</th><th>Heater</th></tr>
<tr><td>1</td><td rowspan="2">Disabled</td><td rowspan="4">ON</td><td>OFF</td><td>FAN ON *2</td><td>OFF</td><td>Stop</td><td>OFF</td><td>High *3</td><td>ON</td></tr>
<tr><td rowspan="2">2</td><td rowspan="2">ON</td><td>High<br>(DIP SW1-7: ON and SW1-8: OFF)<br>or<br>(DIP SW1-7: OFF and SW1-8: ON)</td><td>ON</td><td>High<br>(DIP SW1-7: ON and SW1-8: OFF)<br>or<br>(DIP SW1-7: OFF and SW1-8: ON)</td><td>ON</td><td colspan="2">In heating Thermo-Off<br>Fan: High (DIP SW1-7: ON and SW1-8: OFF) or (DIP SW1-7: OFF and SW1-8: ON) — Heater: ON<br>Fan: Very low (DIP SW1-7: OFF and SW1-8: OFF) STOP (DIP SW1-7: ON and SW1-8: ON) — Heater: OFF</td></tr>
<tr><td>Very low<br>(DIP SW1-7: OFF and SW1-8: OFF)<br>STOP<br>(DIP SW1-7: ON and SW1-8: ON)</td><td>OFF</td><td>Very low<br>(DIP SW1-7: OFF and SW1-8: OFF)<br>STOP<br>(DIP SW1-7: ON and SW1-8: ON)</td><td>OFF</td></tr>
<tr><td>3</td><td rowspan="2">Enabled</td><td>OFF</td><td>FAN ON *2</td><td>OFF</td><td>Stop</td><td>OFF</td><td rowspan="2">*4</td><td rowspan="2">ON</td></tr>
<tr><td>4</td><td>ON</td><td>FAN ON *2</td><td>ON</td><td>Stop</td><td>ON</td></tr>
</table>

*1 Heater will not operate during all error modes.

*2 The fan speed in the Heating Thermo-OFF mode depends on the settings of DIP-SW 1-7 and 1-8. Refer to VIII-[1]-5-1 Function setting.

*3 While the heater is on, the fan will operate at high speed regardless of the fan setting on the remote controller.

*4 The fan speed depends on the settings of the remote controller. The heater turns on regardless of the fan speed.

*5 The fan stops and the heater turns off, depending on the type of error.

*** If a heater is installed in the duct, do not use CN22. By doing so, the fan will turn off when the heater is on, which may result in fire.**

(2) Back-up heating will not be performed when the heater turns on while demand control is performed (not a request item).

(3) This is applicable only to the R410 series. Make the settings for the following dip switches on the outdoor unit control board before switching on the power.

2. PAC-YU25HT (Optional Parts) installation

The following section describes installation of the External Heater Adapter that connects to indoor unit. This products is the special wiring parts to drive an electric heater with the air conditioner.

(1) Parts list

♦Check that the following parts are included in the package.

1) External output cable.....2 in total
Two types of cables with different connectors are included.

2) Panel heater connector.....3 in total
White: 1
Green: 2 (2 types)

(2) Connection to the indoor unit

- Use the cables that fit the connectors on the indoor unit control board.

1) External output cable (with a yellow connector)
This cable is used to connect a relay circuit for an interlocked operation with either an electric or a panel heater.Select the heater output pattern (1st =CN24-1 or 2nd = CN24-2) to use, and connect the cable to the connector on the indoor unit control board that corresponds to the selection.

2) Panel heater connector (with a green connector)
This connector is used to perform an interlocked operation with a panel heater. Depending on the indoor unit control board specification, connect the cable to CN22 as appropriate.

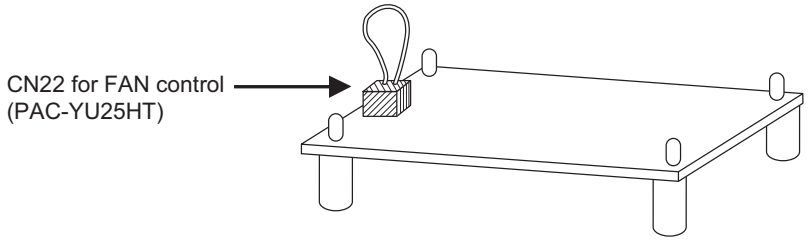


(3) Wiring

- A basic connection method is shown below.

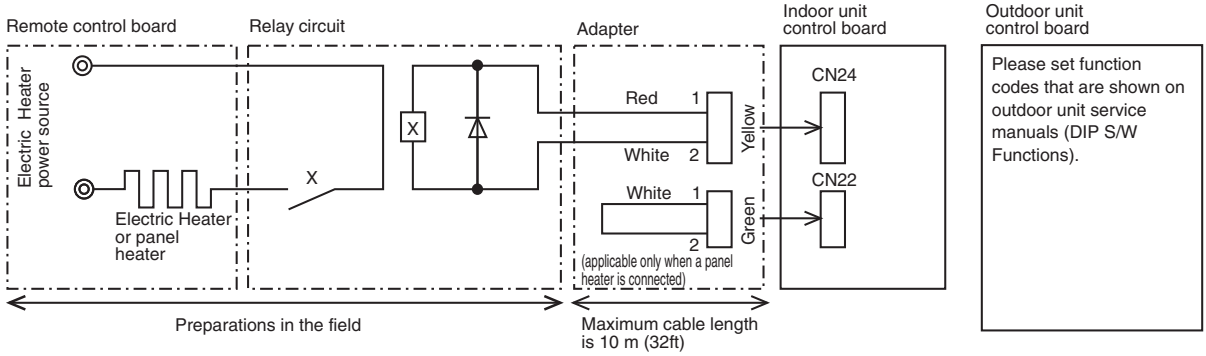


- For relay X, use the specifications given below.
  Operation coil
  Rated voltage: 12VDC
  Power consumption: 0.9W or less

* Use the diode that is recommended by the relay manufacturer at both ends of the relay coil.

- The length of the electrical wiring for the PAC-YU25HT is 2 meters (6-1/2 ft.)
- To extend this length, use sheathed 2-core cable.

Control cable type: CVV, CVS, CPEV or equivalent.
Cable size: 0.5 $mm^2$ ~ 1.25 $mm^2$ (16 to 22 AWG)
Don't extend the cable more than 10 meters (32ft)

Recommended circuit

Wiring diagram

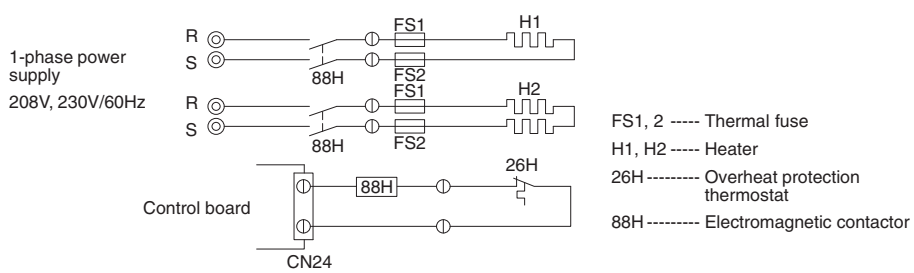


(4) Wiring restrictions

- Keep the length of the cable connecting to the circuit board of the indoor unit shorter than 10 meters (32ft).
- Longer than 10 meters (32ft) could cause improper operation.
- Use a transit relay when extending wiring such as remote wiring.

## [1] Troubleshooting

### 1. Check methods

1. Component and check points

(1) Thermistor

- Room temperature thermistor (TH21)
- Water inlet thermistor (TH22)
- Water outlet thermistor (TH23)

Disconnect the connector and measure the resistance between terminals with a tester.
(Ambient temperature 10°C - 30°C[50°F-86°F])

| Normal | Abnormal |
|---|---|
| 4.3kΩ - 9.6kΩ | Open or short |

(Refer to the thermistor characteristic graph below.)

1) Thermistor characteristic graph

**Low-temperature thermistor**

- Room temperature thermistor (TH21)
- Water inlet thermistor (TH22)
- Water outlet thermistor (TH23)
- Drain sensor (DS)

- Thermistor $R_0$ = 15 kΩ±3%
- Multiplier of B = 3480 kΩ±2%

$$Rt = 15 \exp \{ 3480( \frac{1}{273+t} - \frac{1}{273} ) \}$$

| | | |
|---|---|---|
| 0°C | 32°F | 15kΩ |
| 10°C | 50°F | 9.6kΩ |
| 20°C | 68°F | 6.3kΩ |
| 25°C | 77°F | 5.2kΩ |
| 30°C | 86°F | 4.3kΩ |
| 40°C | 104°F | 3.0kΩ |

(A) Temperature (°C)[°F]

(B) Resistance (kΩ)

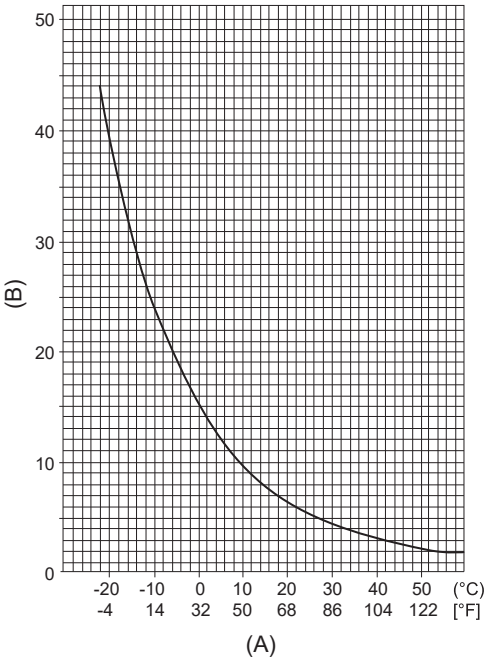


(2) Fan motor (CNMF)

Refer to the page on "DC fan motor (fan motor/indoor control board)."

(3) Drain pump

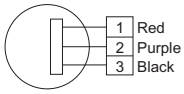


1. Check if the drain float switch works properly.
2. Check if the drain pump works and drains water properly in cooling operation.
3. If no water drains, confirm that the check code 2502 will not be displayed 10 minutes after the operation starts.

Note: The drain pump for this model is driven by the internal DC motor of controller board, so it is not possible to measure the resistance between the terminals.

Normal
Red–Black: Input 13V DC → The fan starts to rotate.
Purple–Black: Abnormal (check code 2502) if it outputs 0–13 V square wave (5 pulses/rotation), and the number of rotaion is not normal.

(4) Drain float switch (CN4F)

Disconnect the connector, and measure the resistance between terminals with a tester.

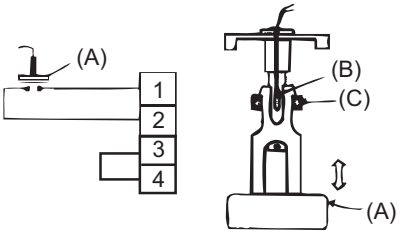


(A) Moving part
(B) Switch
(C) Magnet

| Position of the moving part | Normal | Abnormal |
|---|---|---|
| Up | Short | (any position but short) |
| Down | Open | (any position but open) |

## 2. DC fan motor (fan motor/indoor control board)

1. CAUTION
   - A high voltage is applied to the connector for connection to the fan motor (CNMF).
   - Do not unplug the connector CNMF with the unit energized to avoid damage to the indoor control board and fan motor.

2. Troubleshooting
   - Symptom: Indoor unit fan does not run.

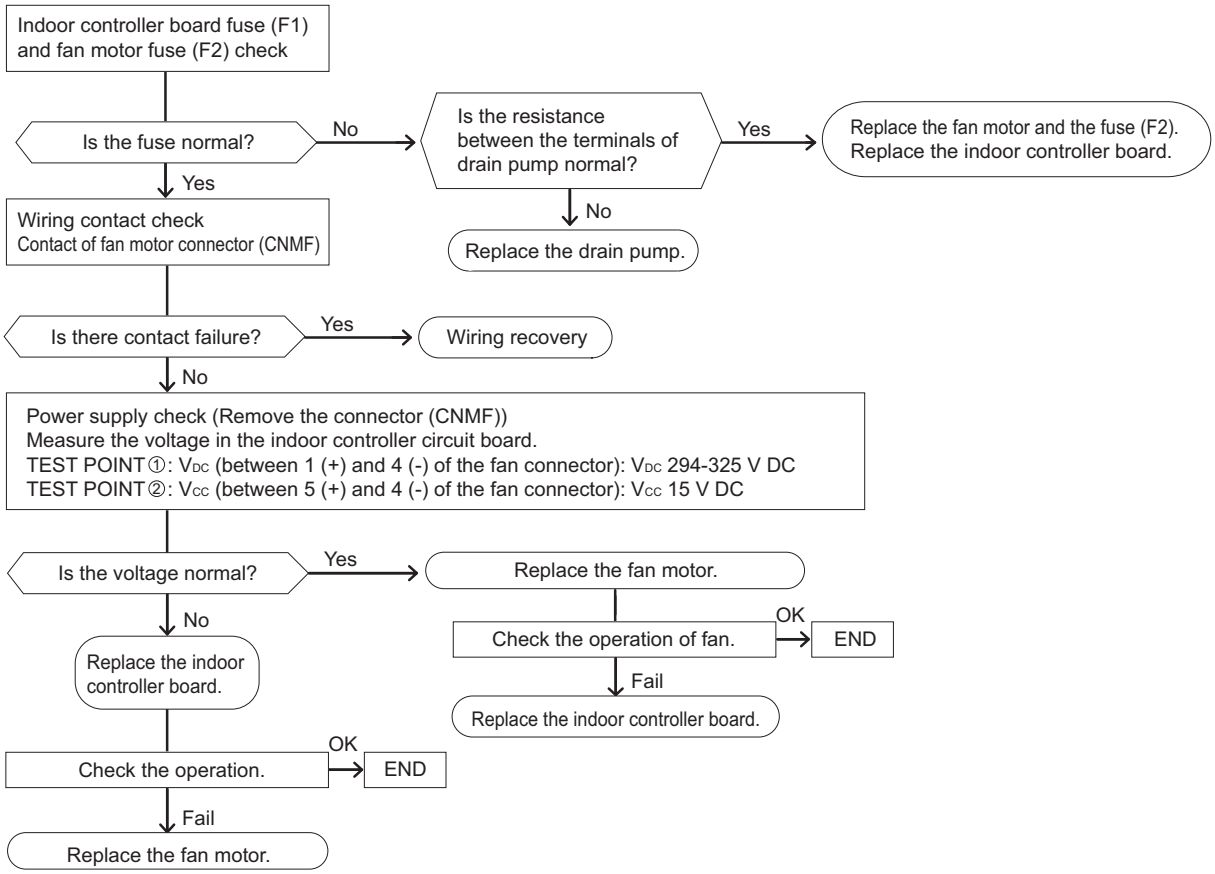

## 3. Address switch setting

**Make sure that power to the unit is turned off.**

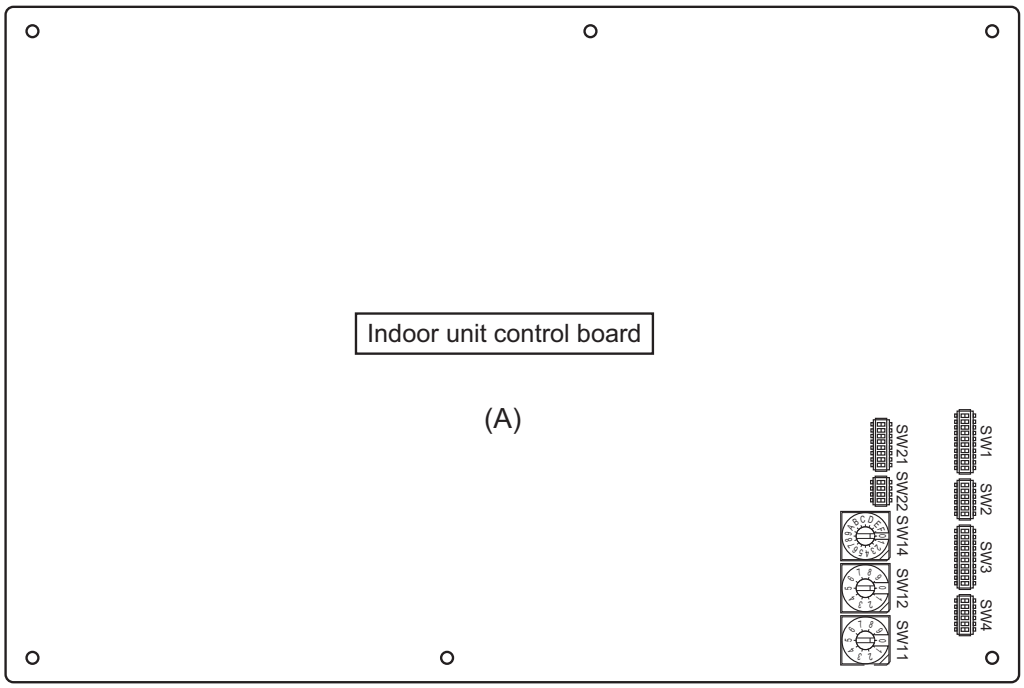


Indoor unit control board

(A)

(A) Indoor unit control board

1. When using an ME remote controller, set the address with the rotary switches (SW11, SW12).
   ♦Address setting is not required when the unit remote controller is used.
   **On-site address setting is required for the indoor units to run.**

2. Address settings vary in different systems.
   Refer to the section on address setting in the outdoor unit installation manual.

3. Address is set with a combination of SW12 (10's digit) and SW11 (1's digit).
   To set the address to "3," set SW12 to "0" and SW11 to "3."
   To set the address to "25," set SW 12 to "2" and SW 11 to "5."

## 4. Voltage test points on the control board

1. TPEFYW006, 008, 012, 015, 018, 024, 027, 030, 036, 048MA1W0A

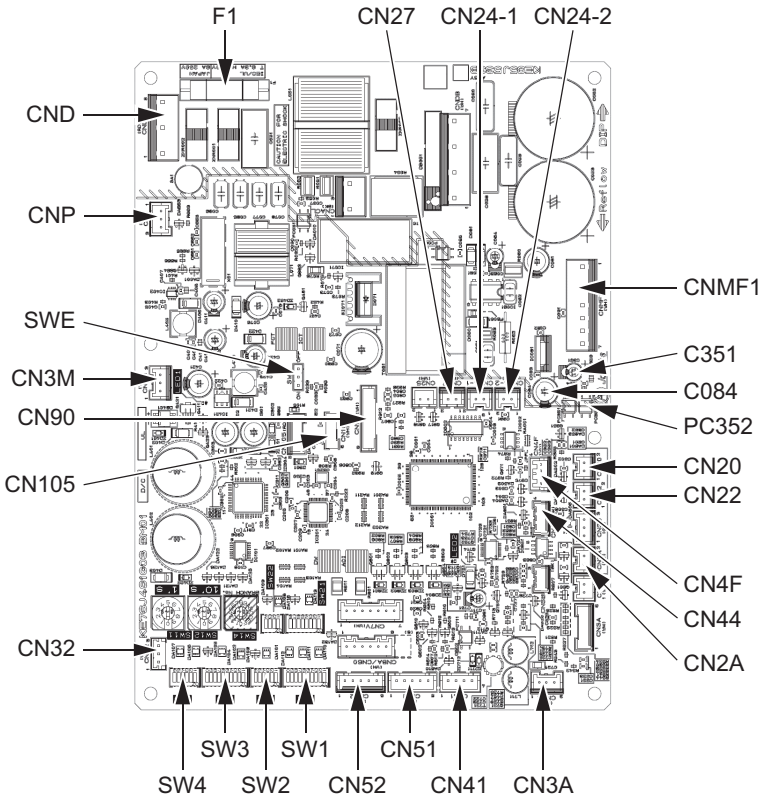


| | |
|---|---|
| F1 | Fuse (AC 250V 6.3A) |
| CND | Power supply voltage (208 - 230V) |
| CN3M | For M-NET transmission cable connection<br>(24 - 30VDC (Between 1 and 3.)) |
| SWE | Emergency operation |
| SW1 | Function setting |
| SW2 | Capacity setting |
| SW4 | Function setting |
| SW3 | Function setting |
| SW11 | 1's digit address set |
| SW12 | 10's digit address set |
| SW14 | Branch No. |
| SW21 | For static pressure selection |
| SW22 | Wireless pair No. |
| CN32 | Remote start/stop adapter |
| CN3A | For MA remote controller cable connection<br>(10 - 13 VDC (Between 1 and 3.)) |
| CN52 | Remote display |
| CN51 | Centralized control |
| CN41 | JAMA standard HA terminal A |
| CN44 | Thermistor (water inlet/outlet temperature) |
| CN4F | Float thermistor |
| CN22 | For fan control |
| CN20 | Thermistor (Inlet temperature) |
| CN27 | Damper |
| CN24-1 | Heater control 1st |
| CN24-2 | Heater control 2nd |
| CN2A | 0-10V Analog input |
| CN90 | Wireless |
| CN105 | IT terminal |
| CNMF | Fan motor output<br>1 - 4: 294 - 325 VDC<br>5 - 4: 15 VDC<br>6 - 4: 0 - 6.5 VDC<br>7 - 4: Stop 0 or 15 VDC<br>Run 7.5 VDC<br>(0 - 15 pulse) |
| CNP | Drain-up mechanism output<br>(13 VDC (Between 1 and 3.)) |

(*1)

| | |
|---|---|
| $V_{FG}$ | Voltage on the (-) side of PC352 and C084<br>(Same with the voltage between 7 (+) and 4 (-) of CNMF) |
| $V_{CC}$ | Voltage between the C084 pins<br>15 VDC<br>(Same with the voltage between 5 (+) and 4 (-) of CNMF) |
| Vsp | Voltage between the C351 pins<br>0 VDC (with the fan stopped)<br>1 - 6.5 VDC (with the fan in operation)<br>(Same with the voltage between 6 (+) and 4 (-) of CNMF) |

## 5. Dipswitch setting (Factory setting)

1. Function setting

(1) SW1

| Switch position | Function | Switch setting | |
|---|---|---|---|
| | | ON | OFF |
| 1 | Active Thermistor (Intake air thermistor) | Built-in thermistor on the remote controller | Indoor unit |
| 2 | Filter clogging detection | Available | Unavailable |
| 3 | Filter life | 2500 hr | 100 hr |
| 4 | Outdoor air intake | Enabled | Disabled |
| 5 | Remote display | Thermo-ON signal | Fan output |
| 6 | Humidifier operation | During heating mode | During heating operation |
| 7 | Fan speed at heating Thermo-OFF | | |
| 8 | | | |
| 9 | Auto restart after power failure | Enabled | Disabled |
| 10 | Power start/stop | Enabled | Disabled |

| 7 | 8 | Fan speed notch in heating thermo off |
|---|---|---|
| OFF | OFF | Very low |
| ON | OFF | Low |
| OFF | ON | Preset fan speed |
| ON | ON | Stop |

1) Adress board

Factory setting

(2) SW3

| Switch position | Function | Switch setting | |
|---|---|---|---|
| | | ON | OFF |
| 1 | Unit type | Cooling only | Heat pump |
| 2 | Heater available | Heater available | Heater not available |
| 3 | - | - | - |
| 4 | Heater Control | Heater ON during defrost and error | Heater OFF during defrost and error |
| 5 | - | - | - |
| 6 | - | - | - |
| 7 | - | - | - |
| 8 | Heating 4-deg up | Disabled | Enabled |
| 9 | - | - | - |
| 10 | - | - | - |

1) Indoor control board

Dipswitch settings must be made while the unit is stopped.

Factory setting

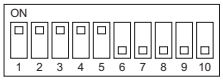


The figure at left shows that the switches 1 through 5 are set to ON and 6 through 10 are set to OFF.

2. Capacity code setting

(1) SW2

Dipswitch settings must be made while the unit is stopped.
Factory setting
The switches are set to correspond to the unit capacity.

TPEFYW006MA1W0A TPEFYW008MA1W0A TPEFYW012MA1W0A TPEFYW015MA1W0A

TPEFYW018MA1W0A TPEFYW024MA1W0A TPEFYW027MA1W0A TPEFYW030MA1W0A

TPEFYW036MA1W0A TPEFYW048MA1W0A

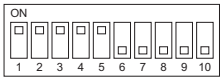


The figure at left shows that the switches 1 through 5 are set to ON and 6 through 10 are set to OFF.

3. Model setting

(1) SW4

Dipswitch settings must be made while the unit is stopped.

Factory setting
Please see the WIRING LABEL on the control box.

Note:
Changes made to the dipswitches SW1, SW2, and SW3 will become effective when the unit comes to a stop (remote controller off). There is no need to power cycle the unit.

4. Power voltage setting

(1) SW21-6

Dipswitch settings must be operated with the main power turned OFF.

Factory setting
Please see the WIRING LABEL on the control box.

Set SW21-6 to OFF side when the power supply is 230 volts.
When the power supply is 208 volts, set SW21-6 to ON side.

5. External static pressure

Five levels of external static pressure are available for selection.
Set the setting either by using the switches on the control board (SW21-1, SW21-2, and SW21-5) or from the function selection screen on the remote controller.

**Note:**

- **When the static pressure setting was set from the remote controller, the actual setting and the switch setting on the control board may not match because the latest setting from the remote controller overrides the previous setting. To check the latest static pressure setting, check it on the remote controller, not on the switch.**
- **If the static pressure setting for the duct is lower than that for the unit, the fan of the unit may repeat start/stop, and the outdoor unit may remain in a stopped state. Match the static pressure settings for the unit to that for the duct.**

**To set the external static pressure with the switches on the control board**

| External static pressure | SW21-1 | SW21-2 | SW21-5 | Initial setting |
|---|---|---|---|---|
| 35 Pa | OFF | OFF | OFF | |
| 50 Pa | ON | OFF | OFF | ○ |
| 70 Pa | OFF | ON | ON | |
| 100 Pa | OFF | OFF | ON | |
| 150 Pa | ON | OFF | ON | |

**To set the external static pressure from the function selection screen on the remote controller (TAR-40MAAU)**
Follow the instructions below and the instructions detailed in the remote controller manual for how to set the switches.
1. Set the function setting No. 32 (Switch setting/Function selection) to “2”.
2. Set the function setting No. 8 and No. 10 to appropriate values, according to the external static pressure.

| Selection | Function setting No. | Initial setting | Current setting |
|---|---|---|---|
| | No. 32 | | |
| Switch setting | 1 | ○ | |
| Function selection | 2 | | |

| External static pressure | Function setting No. | | Initial setting | Current setting |
|---|---|---|---|---|
| | No. 8 | No. 10 | | |
| 35 Pa | 2 | 1 | | |
| 50 Pa | 3 | 1 | ○ | |
| 70 Pa | 1 | 2 | | |
| 100 Pa | 2 | 2 | | |
| 150 Pa | 3 | 2 | | |

**[Important]**
Be sure to write down the settings for all functions in the “Current setting” row if any of the initial settings has been changed.

6. 1s and 10ths digits
(1) SW11, SW12 (Rotary switch)
The use of an ME remote controller requires address setting.

Address settings must be made while the unit is stopped.

Factory setting

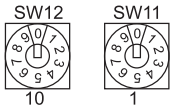


7. Connection No. setting
(1) SW14 (Rotary switch)
This switch is used when the unit connected to an R2 series of outdoor unit.

Factory setting

Note:
Changes to the dipswitches SW11, SW12, SW14, and SW15 must be made while the unit is stopped and the remote controller is OFF.

## [1] Disassembly Procedure

### 1. Control box

**Exercise caution when removing heavy parts.**

1. Removing the control box cover

(1) Remove the three fixing screws on the cover (A) to remove it.

- Tighten screws to a torque of 2.0±0.2 N·m.

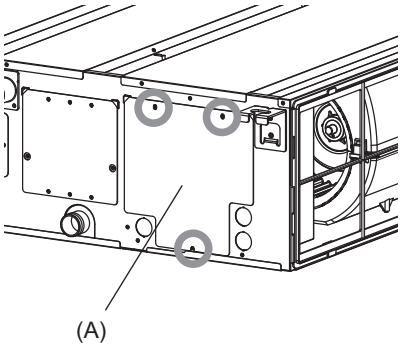


Fig.1

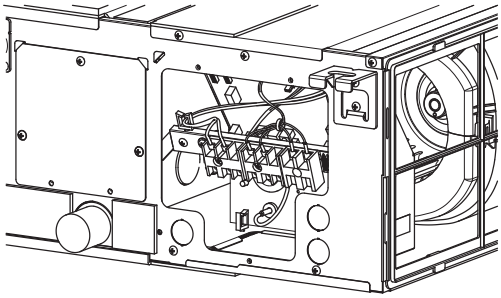

Fig.2

## 2. Thermistor (Intake air)

**Exercise caution when removing heavy parts.**

1. Remove the control box cover according to the procedure in section **1**.
2. Remove the thermistor.

(1) Pull out the thermistor holder (B) and thermistor (C) on the control box.

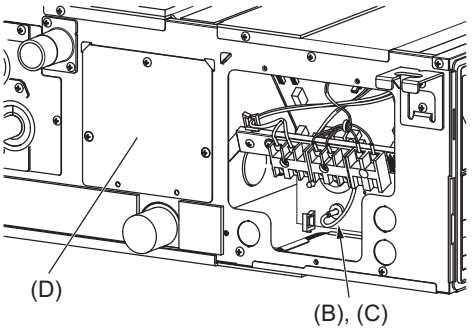


Fig.3

## 3. Drain pump

**Exercise caution when removing heavy parts.**

1. Remove the control box cover according to the procedure in section **1**.
2. Remove the drain pump.

(1) Remove the drain pump from connector (E) in control box.

(2) Remove the cover (D) and the drain pump.

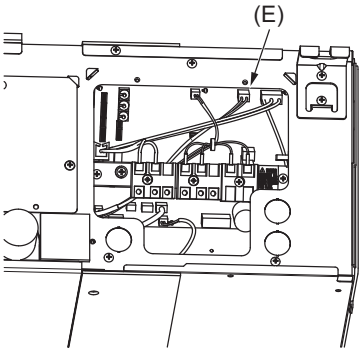


Fig.4

## 4. Drain pan

**Exercise caution when removing heavy parts.**

1. Removing the filter and the bottom plate

(1) Push down the tab on the filter, and pull out the filter in the direction of the arrow 1.

(2) Remove the fixing screws on the bottom plate (F), (G) to remove it.

- Tighten screws to a torque of 1.4±0.2 N·m.

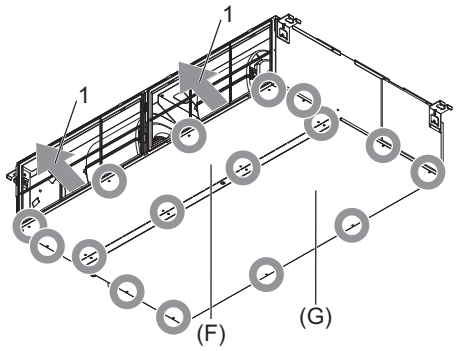


Fig.5

2. Removing the drain pan

(1) Pull out the drain pan in the direction of the arrow 2.

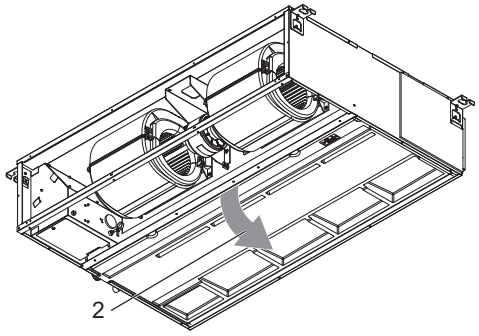


Fig.6

**Note**

- **Drain the water out of the drain pan before removing it.**

## 5. Thermistor (Water inlet/outlet piping temperature detection)

**Exercise caution when removing heavy parts.**

1. Remove the drain pan according to the procedure in section **4**.

2. Removing the Heat exchanger cover

(1) Remove the three fixing screws on the heat exchanger cover (H) to remove it.

♦Tighten screws to a torque of 1.4±0.2 N·m.

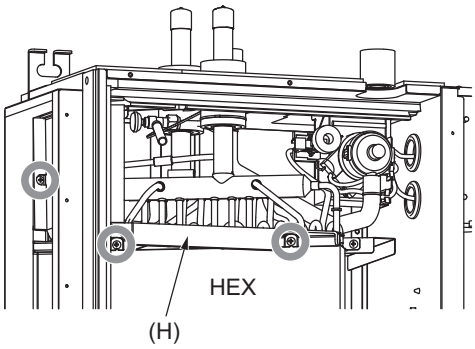


Fig.7

3. Removing the thermistor

(1) Remove the thermistor (J) from the thermistor holder (K) on the copper tube.

Thermistor size
Water inlet pipe: ø8mm
Water outlet pipe: ø6mm

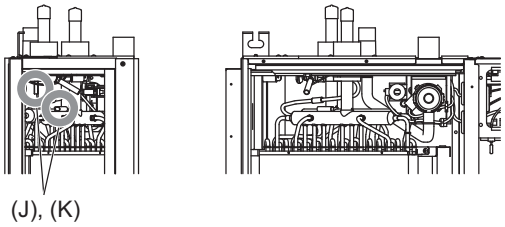


Fig.8

## 6. Fan and fan motor

**Exercise caution when removing heavy parts.**

1. Removing the filter and the bottom plate

(1) Push down the tab on the filter, and pull out the filter in the direction of the arrow 1.

(2) Remove the fixing screws on the bottom plate (M) to remove it.

♦Tighten screws to a torque of 1.4±0.2 N·m.

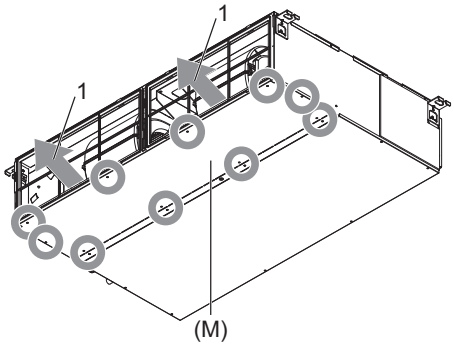


Fig.9

2. Removing the fan casing (bottom half)

(1) Squeeze the tabs on the fan casing to remove it in the direction of arrow 2.

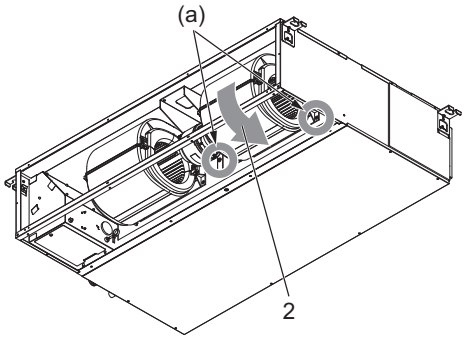


Fig.10

(a) Tab

3. Removing the motor cable

(1) Remove the motor cable threw the rubber bush.

4. Removing the fan motor and the Sirocco fan

(1) Loosen either of the two rubber joint (N) fixing screws.

(2) To remove the Sirocco fans (b) and (c) of TPEFYW036, 048MA1W0A, loosen only the screw (d) on the bearing support (P), and remove the other screws on it.

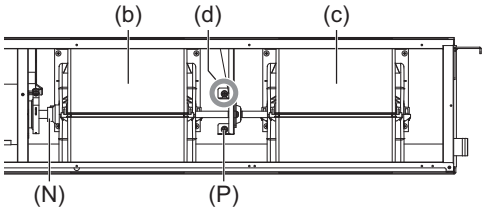


Fig.11

(3) Remove the two motor fixing screws to remove the motor and the Sirocco fan in the direction of arrow 3.

♦Tighten screws to a torque of 3.5±0.2 N·m.

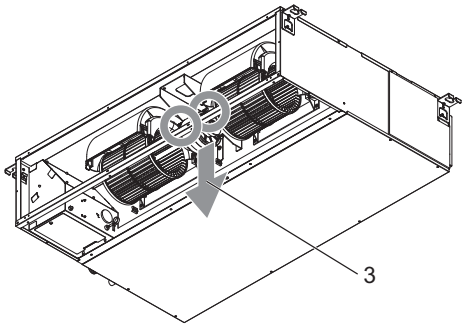


Fig.12

(4) Remove the four fan case fixing screws to take the top half of the fan casing off.

♦Tighten screws to a torque of 1.4±0.2 N·m.

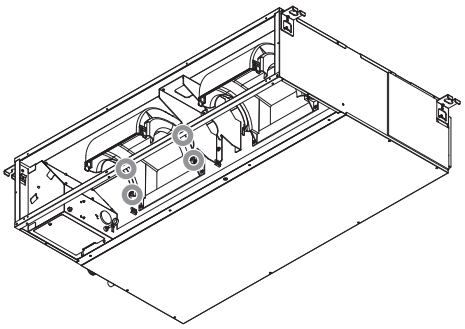

Fig.13

## 7. Heat exchanger

**Exercise caution when removing heavy parts.**

1. Remove the drain pan according to the procedure in section **4**.

2. Remove the heat exchanger cover according to the procedure in section **5-2**.

3. Removing the cover

(1) Remove the six fixing screws on the cover (Q) and (R) to remove it.

♦Tighten screws to a torque of 2.0±0.2 N·m.

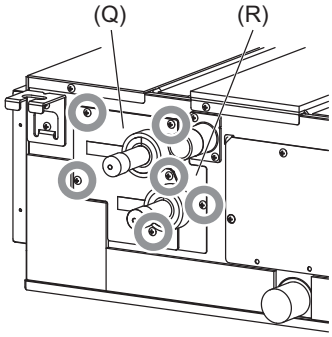


Fig.14

4. Removing the Heat exchanger

(1) Remove the three fixing screws on the heat exchanger (S) to remove it.

♦Tighten screws to a torque of 1.4±0.2 N·m.

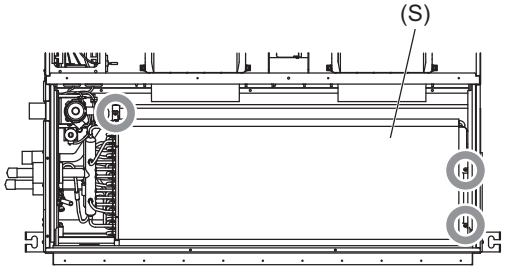


Fig.15

**MITSUBISHI ELECTRIC TRANE HVAC US LLC**

HEAD OFFICE: 1340 SATELLITE BLVD, SUWANEE GA 30024 USA

HWE22050

New publication effective Dec. 2022
Specifications subject to change without notice