MSZ-GS36NA & MUZ-GS36NA
36,000 BTU/H WALL-MOUNTED INDOOR UNIT
36,000 BTU/H HEAT PUMP OUTDOOR UNIT

Job Name:

System Reference: Date:

Indoor Unit MSZ-GS36NA

Outdoor Unit MUZ-GS36NA

INDOOR UNIT FEATURES

- Dual Barrier Coating
- Slim wall-mounted indoor units provide zone comfort control
- The outdoor unit powers the indoor unit, and should a power outage occur, the system is automatically restarted when power returns
- Multiple fan speed options: Low, Medium, High, Super High
- Multiple control options available:
  - Hand-held Remote Controller (provided with unit)
  - kumo cloud® smart device app for remote access
  - Third-party interface options
  - Wired or wireless controllers
- Hot-Start Technology: no cold air rush at equipment startup or when restarting after defrost cycle
- Powerful Operation: quickly cools or heats the room by automatically adjusting fan speed and set temperature for 15 minutes
- Smart Set: recalls a preferred preset temperature setting at the touch of a button
- Wide Vane mode provides 150° of airflow

*Auto and Powerful modes available in addition to the four fan speeds

OUTDOOR UNIT FEATURES

- Dual Barrier Coating
- Slim wall-mounted indoor units provide zone comfort control
- The outdoor unit powers the indoor unit, and should a power outage occur, the system is automatically restarted when power returns
- Multiple fan speed options: Low, Medium, High, Super High
- Multiple control options available:
  - Hand-held Remote Controller (provided with unit)
  - kumo cloud® smart device app for remote access
  - Third-party interface options
  - Wired or wireless controllers
- Hot-Start Technology: no cold air rush at equipment startup or when restarting after defrost cycle
- Powerful Operation: quickly cools or heats the room by automatically adjusting fan speed and set temperature for 15 minutes
- Smart Set: recalls a preferred preset temperature setting at the touch of a button
- Wide Vane mode provides 150° of airflow

*Auto and Powerful modes available in addition to the four fan speeds

Specifications are subject to change without notice.

© 2023 Mitsubishi Electric Trane HVAC US LLC. All rights reserved.

SPECIFICATIONS: MSZ-GS36NA & MUZ-GS36NA

Cooling at 95°F[1]	Maximum Capacity	BTU/H	33,200
	Rated Capacity	BTU/H	33,200
	Minimum Capacity	BTU/H	10,300
	Maximum Power Input	W	3,770
	Rated Power Input	W	3,770
	Moisture Removal	Pints/h	9.3
	Sensible Heat Factor		0.69
	Power Factor [208V / 230V]	%	98.0 / 99.0
Heating at 47°F[2]	Maximum Capacity	BTU/H	36,000
	Rated Capacity	BTU/H	35,200
	Minimum Capacity	BTU/H	9,800
	Maximum Power Input	W	4,000
	Rated Power Input	W	3,740
	Power Factor [208V / 230V]	%	99.0 / 99.0
Heating at 17°F[3]	Maximum Capacity	BTU/H	22,800
	Rated Capacity	BTU/H	22,400
	Maximum Power Input	W	2,920
	Rated Power Input	W	2,770
Heating at 5°F[4]	Maximum Capacity	BTU/H	20,500
	Maximum Power Input	W	2,500
Heating at -4°F[5]	Maximum Capacity	BTU/H	15,900
Efficiency	SEER | SEER2		16.2 |
	EER[1] | EER2[1]		8.8 |
	HSPF [IV] | HSPF2 [IV]		10.0
	COP at 47°F[2]		2.76
	COP at 17°F at Maximum Capacity[3]		2.29
	COP at 5°F at Maximum Capacity[4]		2.4
Electrical	Voltage, Phase, Frequency		208/230, 1, 60
	Guaranteed Voltage Range	V AC	187 - 253
	Voltage: Indoor - Outdoor, S1-S2	V AC	208/230
	Voltage: Indoor - Outdoor, S2-S3	V DC	24
	Short-circuit Current Rating [SCCR]	kA	5
	Recommended Fuse/Breaker Size (Outdoor)	A	20
	Recommended Wire Size [Indoor - Outdoor]	AWG	14
	Power Supply		Indoor unit is powered by the outdoor unit
Indoor Unit	MCA	A	1.0
	Fan Motor Full Load Amperage	A	0.76
	Fan Motor Type		DC Motor
	Airflow Rate at Cooling, Dry	CFM	374–602–699–915
	Airflow Rate at Cooling, Wet	CFM	374–602–699–915
	Airflow Rate at Heating, Dry	CFM	374–602–699–803
	Sound Pressure Level [Cooling]	dB[A]	32–42–49–53
	Sound Pressure Level [Heating]	dB[A]	34–42–49–50
	Drain Pipe Size	In. [mm]	5/8 [15.88]
	Coating on Heat Exchanger		Dual Barrier Coating
	External Finish Color		Munsell 1.0Y 9.2/0.2 White
	Unit Dimensions	W x D x H: In. [mm]	46-1/16 x 11-5/8 x 14-3/8 [1,170 x 295 x 365]
	Package Dimensions	W x D x H: In. [mm]	51 x 18-1/2 x 14-1/4 [1,300 x 470 x 360]
	Unit Weight	Lbs. [kg]	45 [20]
	Package Weight	Lbs. [kg]	51 [22.9]
Indoor Unit Operating Temperature Range	Cooling Intake Air Temp [Maximum / Minimum]*	°F	90 DB, 73 WB / 67 DB, 57 WB
	Heating Intake Air Temp [Maximum / Minimum]	°F	80 DB / 70 DB

NOTES:

AHRI Rated Conditions (Rated data is determined at a fixed compressor speed)	[1]Cooling (Indoor // Outdoor)	°F	80 DB, 67 WB // 95 DB, 75 WB
	[2]Heating at 47°F (Indoor // Outdoor)	°F	70 DB, 60 WB // 47 DB, 43 WB
	[3]Heating at 17°F (Indoor // Outdoor)	°F	70 DB, 60 WB // 17 DB, 15 WB
Conditions	[4]Heating at 5°F (Indoor // Outdoor)	°F	70 DB, 60 WB // 5 DB, 4 WB
	[5]Heating at -4°F (Indoor // Outdoor)	°F	70 DB, 60 WB // -4 DB, -5 WB
	[7]Heating at -13°F (Indoor // Outdoor)	°F	70 DB, 60 WB // -13 DB, -14 WB

*Indoor/Outdoor Unit Operating Temperature Range (Cooling Air Temp [Maximum / Minimum]):
- Applications should be restricted to comfort cooling only; equipment cooling applications are not recommended for low ambient temperature conditions.

**Outdoor Unit Operating Temperature Range (Cooling Thermal Lock-out / Re-start Temperatures; Heating Thermal Lock-out / Re-start Temperatures):
- System cuts out in heating mode to avoid thermistor error and automatically restarts at these temperatures.

Specifications are subject to change without notice.

© 2023 Mitsubishi Electric Trane HVAC US LLC. All rights reserved.

SPECIFICATIONS: MSZ-GS36NA & MUZ-GS36NA

Outdoor Unit	MCA	A	19.0
	MOCP	A	20
	Fan Motor Full Load Amperage	A	0.93
	Fan Motor Output	W	50
	Airflow Rate [Cooling / Heating]	CFM	2191 / 1950
	Refrigerant Control		LEV
	Defrost Method		Reverse Cycle
	Coating on Heat Exchanger		Blue Fin Coating
	Sound Pressure Level, Cooling[1]	dB(A)	56
	Sound Pressure Level, Heating[2]	dB(A)	57
	Compressor Type		Twin Rotary
	Compressor Model		SNB220FQAM1T
	Compressor Rated Load Amps	A	13.8
	Compressor Locked Rotor Amps	A	17.3
	External Finish Color		Munsell 3Y 7.8/1/1
	Base Pan Heater		N/A
	Unit Dimensions	W x D x H: In. [mm]	33-1/16 x 13 x 34-5/8 [840 x 330 x 880]
	Package Dimensions	W x D x H: In. [mm]	38-3/4 x 16-3/4 x 39 [980 x 420 x 990]
	Unit Weight	Lbs. [kg]	121 [55.0]
	Package Weight	Lbs. [kg]	138 [62.5]
Outdoor Unit Operating Temperature Range	Cooling Air Temp [Maximum / Minimum]*	°F	115 DB / 14 DB
	Cooling Thermal Lock-out / Re-start Temperatures**	°F	4 / 0
	Heating Air Temp [Maximum / Minimum]	°F	75 DB, 65 WB / -4 DB, -5 WB
	Heating Thermal Lock-out / Re-start Temperatures**	°F	-9 / -4
Refrigerant	Type		R410A
	Pre-Charged Refrigerant Amount	Lbs, oz	4.0, 16.0
	Maximum Pre-Charged Piping Length	Ft. [m]	25.0 [7.5]
	Additional Refrigerant Charge Per Additional Piping Length	oz./Ft. [g/m]	.216 [20]
Piping	Gas Pipe Size O.D. [Flared]	In.[mm]	5/8 [15.88]
	Liquid Pipe Size O.D. [Flared]	In.[mm]	1/4 [6.35]
	Maximum Piping Length	Ft. [m]	100 [30]
	Maximum Height Difference	Ft. [m]	50 [15]
	Maximum Number of Bends		10

NOTES:

AHRI Rated Conditions (Rated data is determined at a fixed compressor speed)	[1]Cooling (Indoor // Outdoor)	°F	80 DB, 67 WB // 95 DB, 75 WB
	[2]Heating at 47°F (Indoor // Outdoor)	°F	70 DB, 60 WB // 47 DB, 43 WB
	[3]Heating at 17°F (Indoor // Outdoor)	°F	70 DB, 60 WB // 17 DB, 15 WB
Conditions	[4]Heating at 5°F (Indoor // Outdoor)	°F	70 DB, 60 WB // 5 DB, 4 WB
	[5]Heating at -4°F (Indoor // Outdoor)	°F	70 DB, 60 WB // -4 DB, -5 WB
	[7]Heating at -13°F (Indoor // Outdoor)	°F	70 DB, 60 WB // -13 DB, -14 WB

*Indoor/Outdoor Unit Operating Temperature Range (Cooling Air Temp [Maximum / Minimum]):
- Applications should be restricted to comfort cooling only; equipment cooling applications are not recommended for low ambient temperature conditions.

**Outdoor Unit Operating Temperature Range (Cooling Thermal Lock-out / Re-start Temperatures; Heating Thermal Lock-out / Re-start Temperatures):
- System cuts out in heating mode to avoid thermistor error and automatically restarts at these temperatures.

Specifications are subject to change without notice.

© 2023 Mitsubishi Electric Trane HVAC US LLC. All rights reserved.

INDOOR UNIT ACCESSORIES: MSZ-GS36NA

Control Interface	CN24 Relay Kit	☐ CN24RELAY-KIT-CM3
	IT Extender	☐ PAC-WHS01IE-E
	kumo station® for kumo cloud®	☐ PAC-WHS01HC-E
	Procon BACnet® and Modbus® Interface	☐ PAC-UKPRC001-CN-1
	System Control Interface	☐ MAC-334IF-E
	Thermostat Interface	☐ PAC-US444CN-1
	Thermostat Interface	☐ PAC-US445CN-1
	USNAP Adapter	☐ PAC-WHS01UP-E
	Wireless Interface for kumo cloud®	☐ PAC-USWHS002-WF-2
Remote Sensor	Wired Remote Sensor	☐ M21EAA307
	Wireless temperature and humidity sensor for kumo cloud®	☐ PAC-USWHS003-TH-1
Wired Remote Controller	Deluxe Wired MA Remote Controller†	☐ PAR-40MAAU
	Simple Ductless Wired Remote Controller	☐ PAC-SDW01RC-1
	Simple MA Remote Controller†	☐ PAC-YT53CRAU-J
	Touch MA Controller†	☐ PAR-CT01MAU-SB
Wireless Remote Controller	kumo touch™ RedLINK™ Wireless Controller	☐ MHK2
	Lockdown bracket for remote controller	☐ RCMKP1CB
Condensate	Blue Diamond (Advanced) Mini Condensate Pump w/ Reservoir & Sensor (208/230V) [recommended]	☐ X87-721
	Blue Diamond (MegaBlue Advanced) Condensate Pump w/ Reservoir & Sensor	☐ X87-835
	Blue Diamond Alarm Extension Cable—6.5 Ft.	☐ C13-192
	Blue Diamond MultiTank — collection tank for use with multiple pumps	☐ C21-014
	Blue Diamond Sensor Extension Cable — 15 Ft.	☐ C13-103
	Drain Pan Level Sensor/Control	☐ SS610E
	Refco Condensate Pump (100-240 VAC)	☐ GOBI-II
	Refco Condensate Pump (100-240 VAC) up to 120,000 BTU/H	☐ COMBI
	Sauermann Condensate Pump	☐ SI30-230
Disconnect Switch	(30A/600V/UL) [fits 2” X 4” utility box] - Black	☐ TAZ-MS303
	(30A/600V/UL) [fits 2” X 4” utility box] - White	☐ TAZ-MS303W
Lineset	100’ x 1/4” x 100’ x 5/8” Lineset (Twin-Tube Insulation)	☐ MLS145812T-100
	15’ x 1/4” x 15’ x 5/8” Lineset (Twin-Tube Insulation)	☐ MLS145812T-15
	30’ x 1/4” x 30’ x 5/8” Lineset (Twin-Tube Insulation)	☐ MLS145812T-30
	50’ x 1/4” x 50’ x 5/8” Lineset (Twin-Tube Insulation)	☐ MLS145812T-50
	65’ x 1/4” x 65’ x 5/8” Lineset (Twin-Tube Insulation)	☐ MLS145812T-65

NOTES:
‡PAC-SF40RM-E (Unable to use with wireless remote controller)

© 2023 Mitsubishi Electric Trane HVAC US LLC. All rights reserved.

OUTDOOR UNIT ACCESSORIES: MUZ-GS36NA

Air Outlet Guide	Air Outlet Guide	☐ MAC-890SG-E
Condensate	Refco Condensate Pump (100-240 VAC) up to 120,000 BTU/H	☐ COMBI
Control/Service Tool	M- & P-Series Maintenance Tool Cable Set	☐ M21EC0397
	USB/UART Conversion Cable (Required for all laptop connection)	☐ M21EC1397
Drain Socket	Drain Socket	☐ MAC-871DS
Hail Guards	Hail Guard	☐ HG-A7
Mini-Split Wire	14 Gauge, 4 wire MiniSplit Cable—250 ft. roll	☐ SW144-250
	14 Gauge, 4 wire MiniSplit Cable—50 ft. roll	☐ SW144-50
	16 Gauge, 4 wire MiniSplit Cable—250 ft. roll	☐ SW164-250
	16 Gauge, 4 wire MiniSplit Cable—50 ft. roll	☐ SW164-50
Mounting Pad	Condensing Unit Mounting Pad: 16” x 36” x 3”	☐ ULTRILITE1
	Outdoor Unit 3-1/4 inch Mounting Base (Pair) - Plastic	☐ DSD-400P
Stand	18” Single Fan Stand	☐ QSMS1801M
	24” Single Fan Stand	☐ QSMS2401M
	Condenser Wall Bracket	☐ QSWB2000M-1
	Condenser Wall Bracket - Stainless Steel Finish	☐ QSWBSS
	Outdoor Unit Stand — 12” High	☐ QSMS1201M

© 2023 Mitsubishi Electric Trane HVAC US LLC. All rights reserved.

INDOOR UNIT DIMENSIONS: MSZ-GS36NA

Unit : inch

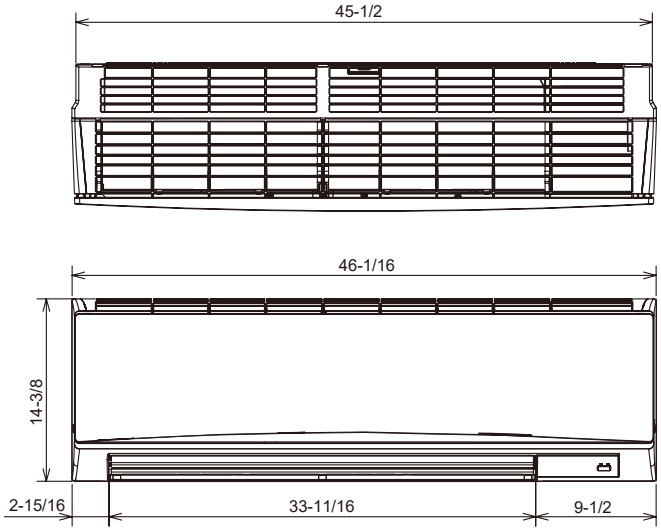

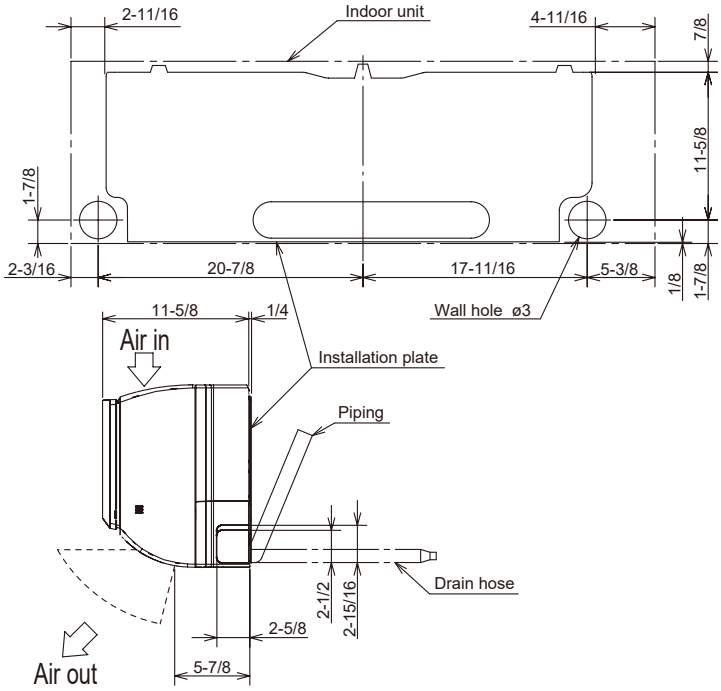

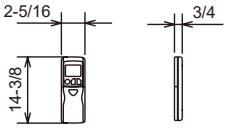

Wireless remote controller

	PIPING	INSULATION
LIQUID LINE	ϕ3/8 - 19-11/16 (FLARED CONNECTION ϕ1/4)	ϕ1-1/4 O.D ϕ9/16 I.D
GAS LINE	ϕ15/32 - 17-13/16 (FLARED CONNECTION ϕ5/8)	ϕ1-7/16 O.D ϕ13/16 I.D
DRAIN HOSE	INSULATION ϕ1-1/8 CONNECTED PART ϕ5/8 O.D	

Required Space (Indoor Unit)

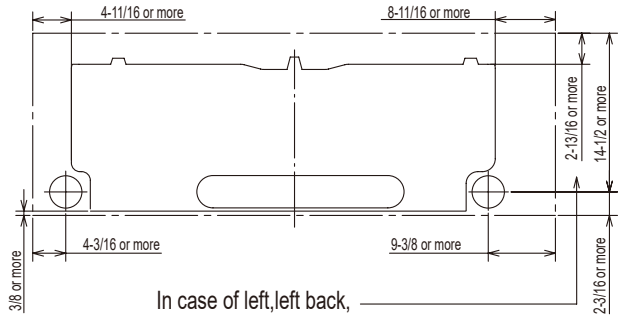

In case of left,left back,
or left under piping (using spacer) 5-1/8 or more

© 2023 Mitsubishi Electric Trane HVAC US LLC. All rights reserved.

OUTDOOR UNIT DIMENSIONS: MUZ-GS36NA

Unit: inch

REQUIRED SPACE

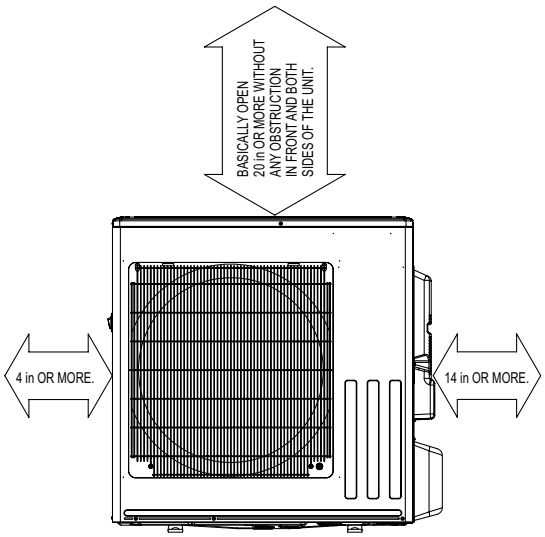

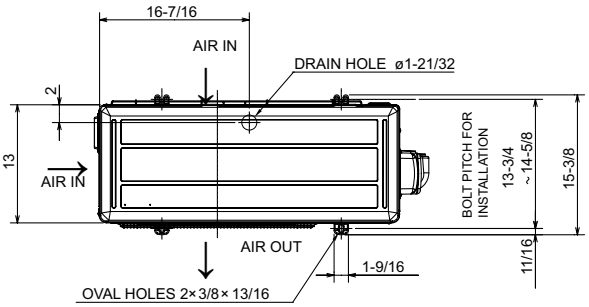

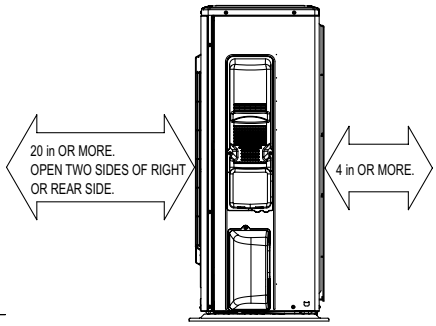

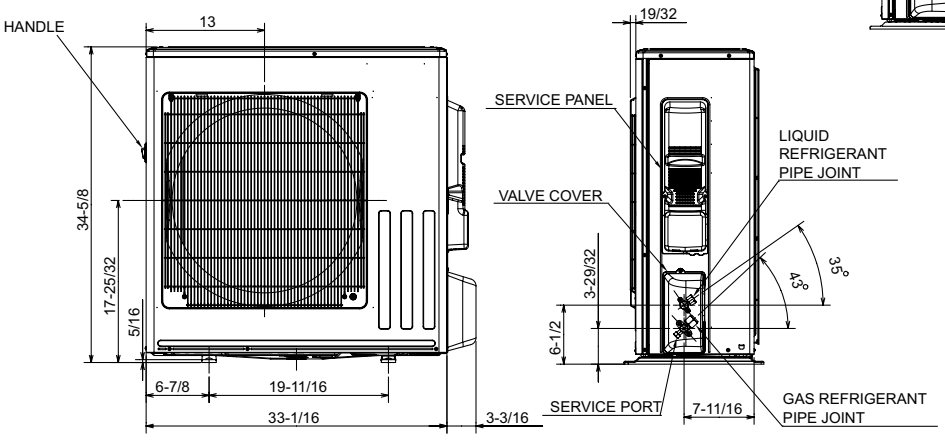

REFRIGERANT PIPE JOINT	LIQUID REFRIGERANT PIPE	FLARED ø6.35 (1/4")
	GAS REFRIGERANT PIPE	FLARED ø15.88 (5/8")

1340 Satellite Boulevard Suwanee, GA 30024
Toll Free: 800-433-4822 www.mehvac.com

FORM# MSZ-GS36NA & MUZ-GS36NA - 202311

Specifications are subject to change without notice.

© 2023 Mitsubishi Electric Trane HVAC US LLC. All rights reserved.