MLZ-KP18NA2 & SUZ-KA18NAHZ
18,000 BTU/H EZ FIT CEILING CASSETTE
18,000 BTU/H HYPER-HEATING UNIVERSAL OUTDOOR UNIT

Job Name:	
System Reference:	Date:

Indoor Unit MLZ-KP18NA2

Outdoor Unit SUZ-KA18NAHZ

INDOOR UNIT FEATURES
- Fits between 16” joists spacing
- Stylish, square design panel
- Built-in condensate lift mechanism (19.6”)
- Serviceable from the bottom (electrical and flare connections)
- Adjustable fan speeds and vane directions
- Washable antibacterial and deodorizing filter
- Multiple control options available:
  - Hand-held Remote Controller (provided with unit)
  - kumo cloud® smart device app for remote access
  - Third-party interface options
  - Wired or wireless controllers
- Pocket inside the access panel for kumo cloud® Wireless Interface

OUTDOOR UNIT FEATURES
- The outdoor unit powers the indoor unit, and should a power outage occur, the system is automatically restarted when power returns
- INVERTER-driven compressor and LEV provide high efficiency and comfort while using only the energy needed to maintain maximum performance
- H2i® hyper heat performance offers 100% heating capacity at 5° F
- Hot-Start Technology: no cold air rush at equipment startup or when restarting after Defrost Cycle
- Quiet operation
- Blue Fin anti-corrosion treatment applied to the outdoor unit heat exchanger for increased coil protection and longer life
- Built-in base pan heater
- Innovative Joint Lap DC Motor leads to high efficiency and reliability
- Pulse Amplitude Modulation technology

Specifications are subject to change without notice.

© 2022 Mitsubishi Electric Trane HVAC US LLC. All rights reserved.

SPECIFICATIONS: MLZ-KP18NA2 & SUZ-KA18NAHZ

Cooling at 95°F[1]	Maximum Capacity	BTU/H	16,700
	Rated Capacity	BTU/H	16,700
	Minimum Capacity	BTU/H	8,740
	Maximum Power Input	W	1,335
	Rated Power Input	W	1,335
	Moisture Removal	Pints/h	5.1
	Sensible Heat Factor		0.66
	Power Factor [208V / 230V]	%	98.0 / 98.0
Heating at 47°F[2]	Maximum Capacity	BTU/H	22,000
	Rated Capacity	BTU/H	18,600
	Minimum Capacity	BTU/H	8,500
	Maximum Power Input	W	2,700
	Rated Power Input	W	1,780
	Power Factor [208V / 230V]	%	98.0 / 98.0
Heating at 17°F[3]	Maximum Capacity	BTU/H	18,600
	Rated Capacity	BTU/H	11,800
	Maximum Power Input	W	2,260
	Rated Power Input	W	1,430
Heating at 5°F[4]	Maximum Capacity	BTU/H	18,600
	Maximum Power Input	W	3,900
Heating at -4°F[5]	Maximum Capacity	BTU/H	16,700
Heating at -13°F[7]	Maximum Capacity	BTU/H	14,800
Efficiency	SEER2		18.8
	EER2[1]		12.5
	HSPF [IV]2		9.0
	COP at 47°F[2]		3.0
	COP at 17°F at Maximum Capacity[3]		2.4
	COP at 5°F at Maximum Capacity[4]		1.39
	ENERGY STAR® Certified		Yes
Electrical	Voltage, Phase, Frequency		208/230, 1, 60
	Guaranteed Voltage Range	V AC	187 - 253
	Voltage: Indoor - Outdoor, S1-S2	V AC	208/230
	Voltage: Indoor - Outdoor, S2-S3	V DC	24
	Short-circuit Current Rating [SCCR]	kA	5
	Recommended Fuse/Breaker Size (Oudoor)	A	20
	Recommended Wire Size [Indoor - Outdoor]	AWG	14
	Power Supply		Indoor unit is powered by the outdoor unit
Indoor Unit	MCA	A	1.0
	Fan Motor Full Load Amperage	A	0.68
	Fan Motor Type		DC Motor
	Airflow Rate at Cooling, Dry	CFM	212–293–346–403
	Airflow Rate at Cooling, Wet	CFM	180–249–294–343
	Airflow Rate at Heating, Dry	CFM	212–311–364–417
	Sound Pressure Level [Cooling]	dB[A]	29–36–41–47
	Sound Pressure Level [Heating]	dB[A]	26–37–42–48
	Drain Pipe Size	In. [mm]	1-1/4 [32]
	Condensate Lift Mechanism, Maximum Distance	In. [mm]	19-11/16 [500]
	Coating on Heat Exchanger		—
	External Finish Color		Munsell 4.0GY 9.1/0.2
	Unit Dimensions	W x D x H: In. [mm]	43-3/8 x 14-3/16 x 7-5/16 [1,102 x 360 x 185]
	Package Dimensions	W x D x H: In. [mm]	46-5/16 x 15-3/4 x 11-1/8 [1,177 x 400 x 284]
	Unit Weight	Lbs. [kg]	35 [16]
	Package Weight	Lbs. [kg]	42 [19]
Indoor Unit Operating Temperature Range	Cooling Intake Air Temp [Maximum / Minimum]*	°F	90 DB, 73 WB / 67 DB, 57 WB
	Heating Intake Air Temp [Maximum / Minimum]	°F	80 DB / 70 DB

NOTES:

AHRI Rated Conditions (Rated data is determined at a fixed compressor speed)	[1]Cooling (Indoor // Outdoor)	°F	80 DB, 67 WB // 95 DB, 75 WB
	[2]Heating at 47°F (Indoor // Outdoor)	°F	70 DB, 60 WB // 47 DB, 43 WB
	[3]Heating at 17°F (Indoor // Outdoor)	°F	70 DB, 60 WB // 17 DB, 15 WB
Conditions	[4]Heating at 5°F (Indoor // Outdoor)	°F	70 DB, 60 WB // 5 DB, 4 WB
	[5]Heating at -4°F (Indoor // Outdoor)	°F	70 DB, 60 WB // -4 DB, -5 WB
	[7]Heating at -13°F (Indoor // Outdoor)	°F	70 DB, 60 WB // -13 DB, -14 WB

*Indoor/Outdoor Unit Operating Temperature Range (Cooling Air Temp [Maximum / Minimum]):
- Applications should be restricted to comfort cooling only; equipment cooling applications are not recommended for low ambient temperature conditions.

**Outdoor Unit Operating Temperature Range (Cooling Thermal Lock-out / Re-start Temperatures; Heating Thermal Lock-out / Re-start Temperatures):
- System cuts out in heating mode to avoid thermistor error and automatically restarts at these temperatures.

Specifications are subject to change without notice.

© 2022 Mitsubishi Electric Trane HVAC US LLC. All rights reserved.

SPECIFICATIONS: MLZ-KP18NA2 & SUZ-KA18NAHZ

Outdoor Unit	MCA	A	17.0
	MOCP	A	31
	Fan Motor Full Load Amperage	A	1
	Fan Motor Output	W	60
	Airflow Rate [Cooling / Heating]	CFM	2,020 / 1,930
	Refrigerant Control		LEV
	Defrost Method		Reverse Cycle
	Coating on Heat Exchanger		Blue Fin Coating
	Sound Pressure Level, Cooling[1]	dB(A)	55
	Sound Pressure Level, Heating[2]	dB(A)	55
	Compressor Type		DC INVERTER-driven Twin Rotary
	Compressor Model		SNB220FQGMT
	Compressor Rated Load Amps	A	13
	Compressor Locked Rotor Amps	A	16.0
	Compressor Oil [Type // Charge]	oz.	FV50S // 23.7
	External Finish Color		Ivory Munsell 3Y 7.8/1.1
	Base Pan Heater		Built-in
	Unit Dimensions	W x D x H: In. [mm]	33-1/16 x 13 x 34-5/8 [840 x 330 x 880]
	Package Dimensions	W x D x H: In. [mm]	38-3/4 x 16-3/4 x 39 [980 x 420 x 990]
	Unit Weight	Lbs. [kg]	131 [59.5]
	Package Weight	Lbs. [kg]	150 [68]
Outdoor Unit Operating Temperature Range	Cooling Air Temp [Maximum / Minimum]*	°F	115 DB / 14 DB
	Cooling Thermal Lock-out / Re-start Temperatures**	°F	-1 / 3
	Heating Air Temp [Maximum / Minimum]	°F	75 DB, 65 WB / -13 DB, -14 WB
	Heating Thermal Lock-out / Re-start Temperatures**	°F	-25 / -14
Refrigerant	Type		R410A
	Maximum Charge Quantity	Lbs, oz	3.0, 12.0
	Initial Charge Quantity	Ft. [m]	100.0 [30.0]
	Additional Refrigerant Charge Per Additional Piping Length	oz./Ft. [g/m]	0 [0]
Piping	Gas Pipe Size O.D. [Flared]	In.[mm]	1/2 [12.7]
	Liquid Pipe Size O.D. [Flared]	In.[mm]	1/4 [6.35]
	Maximum Piping Length	Ft. [m]	100 [30]
	Maximum Height Difference	Ft. [m]	50 [15]
	Maximum Number of Bends		10

NOTES:

AHRI Rated Conditions (Rated data is determined at a fixed compressor speed)	[1]Cooling (Indoor // Outdoor)	°F	80 DB, 67 WB // 95 DB, 75 WB
	[2]Heating at 47°F (Indoor // Outdoor)	°F	70 DB, 60 WB // 47 DB, 43 WB
	[3]Heating at 17°F (Indoor // Outdoor)	°F	70 DB, 60 WB // 17 DB, 15 WB
Conditions	[4]Heating at 5°F (Indoor // Outdoor)	°F	70 DB, 60 WB // 5 DB, 4 WB
	[5]Heating at -4°F (Indoor // Outdoor)	°F	70 DB, 60 WB // -4 DB, -5 WB
	[7]Heating at -13°F (Indoor // Outdoor)	°F	70 DB, 60 WB // -13 DB, -14 WB

*Indoor/Outdoor Unit Operating Temperature Range (Cooling Air Temp [Maximum / Minimum]):
- Applications should be restricted to comfort cooling only; equipment cooling applications are not recommended for low ambient temperature conditions.

**Outdoor Unit Operating Temperature Range (Cooling Thermal Lock-out / Re-start Temperatures; Heating Thermal Lock-out / Re-start Temperatures):
- System cuts out in heating mode to avoid thermistor error and automatically restarts at these temperatures.

Specifications are subject to change without notice.

© 2022 Mitsubishi Electric Trane HVAC US LLC. All rights reserved.

INDOOR UNIT ACCESSORIES: MLZ-KP18NA2

Control Interface	BACnet® and Modbus® Interface	☐ PAC-UKPRC001-CN-1
	CN24 Relay Kit	☐ CN24RELAY-KIT-CM3
	IT Extender	☐ PAC-WHS01IE-E
	kumo station® for kumo cloud®	☐ PAC-WHS01HC-E
	Lockdown bracket for remote controller	☐ RCMKP1CB
	System Control Interface	☐ MAC-334IF-E
	Thermostat Interface	☐ PAC-US444CN-1
	Thermostat Interface	☐ PAC-US445CN-1
	USNAP Adapter	☐ PAC-WHS01UP-E
	Wireless Interface for kumo cloud®	☐ PAC-USWHS002-WF-2
Remote Sensor	Wired Remote Sensor	☐ M21EAA307
	Wireless temperature and humitity sensor for kumo cloud®	☐ PAC-USWHS003-TH-1
Wired Remote Controller	Deluxe Wired MA Remote Controller†	☐ PAR-40MAAU
	Simple MA Remote Controller†	☐ PAC-YT53CRAU-J
	Touch MA Controller†	☐ PAR-CT01MAU-SB
Wireless Remote Controller	kumo touch™ RedLINK™ Wireless Controller	☐ MHK2
Condensate	Blue Diamond (Advanced) Mini Condensate Pump w/ Reservoir & Sensor (208/230V) [recommended]	☐ X87-721
	Blue Diamond (MicroBlue) Mini Condensate Pump (110/208/230V) up to 18,000 BTU/H	☐ X86-003
	Refco Condensate Pump (100-240 VAC) up to 120,000 BTU/H	☐ COMBI
Disconnect Switch	(30A/600V/UL) [fits 2” X 4” utility box] - Black	☐ TAZ-MS303
	(30A/600V/UL) [fits 2” X 4” utility box] - White	☐ TAZ-MS303W
Filter	Anti-allergy Enzyme Filter	☐ MAC-408FT-E
Grille	Grille (required)	✔ MLP-444WU
Lineset	100’ x 1/4” x 100’ / 1/2” Lineset (Twin-Tube Insulation)	☐ MLS141212T-100
	15’ x 1/4” x 15’ / 1/2” Lineset (Twin-Tube Insulation)	☐ MLS141212T-15
	30’ x 1/4” x 30’ / 1/2” Lineset (Twin-Tube Insulation)	☐ MLS141212T-30
	50’ x 1/4” x 50’ / 1/2” Lineset (Twin-Tube Insulation)	☐ MLS141212T-50
	65’ x 1/4” x 65’ / 1/2” Lineset (Twin-Tube Insulation)	☐ MLS141212T-65

NOTES:
†Requires MAC-334IF-E
- M-Series EZ FIT® Recessed Ceiling Cassette, Floor-mount and Wall-mount
  Allows indoor units to connect to an MA Controller:
  Deluxe MA Remote Controller
  Simple MA Controller
  Touch MA Controller

© 2022 Mitsubishi Electric Trane HVAC US LLC. All rights reserved.

OUTDOOR UNIT ACCESSORIES: SUZ-KA18NAHZ

Air Outlet Guide	Air Outlet Guide	☐ MAC-886SG-E
Control/Service Tool	M- & P-Series Maintenance Tool Cable Set	☐ M21EC0397
Mini-Split Wire	14 Gauge, 4 wire MiniSplit Cable—250 ft. roll	☐ S144-250
	14 Gauge, 4 wire MiniSplit Cable—250 ft. roll	☐ SW144-250
	14 Gauge, 4 wire MiniSplit Cable—50 ft. roll	☐ S144-50
	14 Gauge, 4 wire MiniSplit Cable—50 ft. roll	☐ SW144-50
	16 Gauge, 4 wire MiniSplit Cable—250 ft. roll	☐ S164-250
	16 Gauge, 4 wire MiniSplit Cable—250 ft. roll	☐ SW164-250
	16 Gauge, 4 wire MiniSplit Cable—50 ft. roll	☐ S164-50
	16 Gauge, 4 wire MiniSplit Cable—50 ft. roll	☐ SW164-50
Mounting Pad	Condensing Unit Mounting Pad: 16” x 36” x 3”	☐ ULTRILITE1
Optional Defrost Heater	Base Heater	☐ MAC-642BH-U1
Stand	18” Single Fan Stand	☐ QSMS1801M
	24” Single Fan Stand	☐ QSMS2401M
	Condenser Wall Bracket	☐ QSWB2000M-1
	Outdoor Unit Stand — 12” High	☐ QSMS1201M

© 2022 Mitsubishi Electric Trane HVAC US LLC. All rights reserved.

INDOOR UNIT DIMENSIONS: MLZ-KP18NA2

Unit: inch

INDOOR UNIT OUTLINE DRAWING

(TOP VIEW)

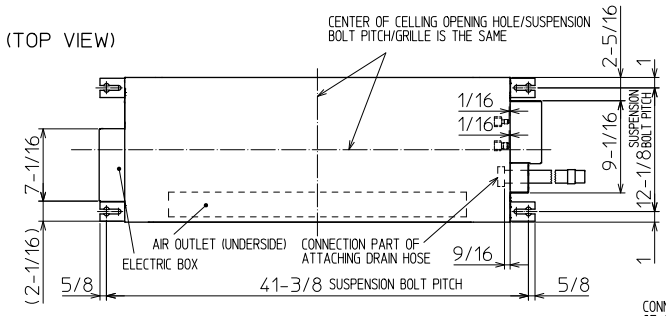

(FRONT VIEW)

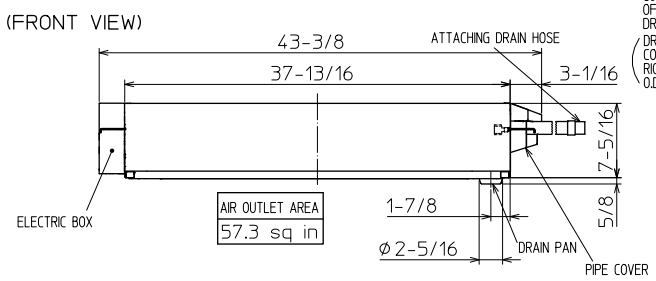

REMOTE CONTROLLER OUTLINE DRAWING

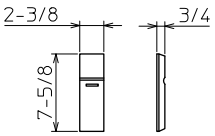

(RIGHT SIDE VIEW)

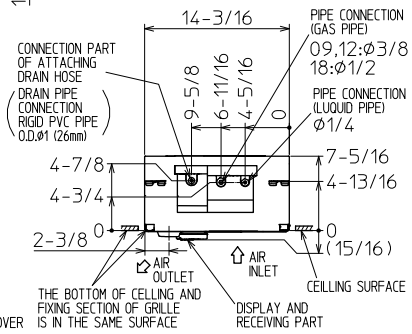

GRILLE OUTLINE DRAWING
(MLP-444W)

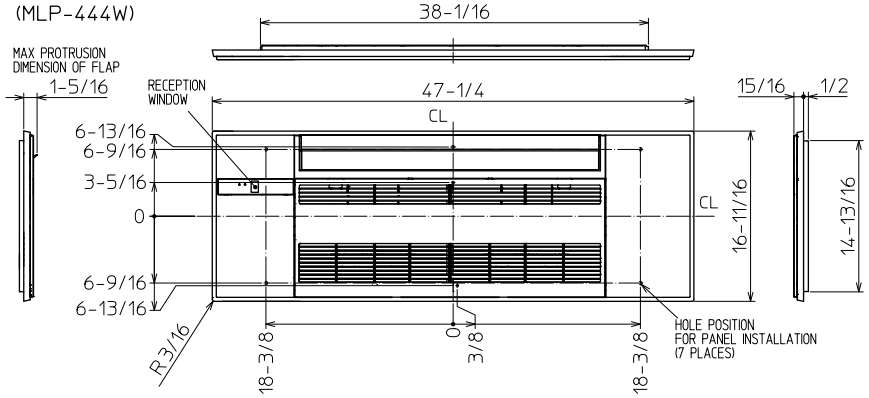

		KP09/12NA	KP18NA
EXTENSION PIPE	LIQUID PIPE O.D.	ø1/4	
	GAS PIPE O.D.	ø3/8	ø1/2
CONNECTIONG OF PIPE	LIQUID PIPE	FLARED CONNECTION ø1/4	
	GAS PIPE	FLARED CONNECTION ø3/8	FLARED CONNECTION ø1/2
DRAIN HOSE		HEAT INSULATER O.D. ø1-1/4 / CONNECTION I.D. ø1 / EFFECTIVE LENGTH 18-7/8	
DRAIN PIPE CONNECTION		RIGID PVC PIPE O.D. ø1 (26mm)	

NOTE1. CUT THE DRAIN HOSE (ACCESSORY) FOR USE, IF NECESSARY.

INDOOR UNIT DETAIL VIEW
(TOP VIEW)

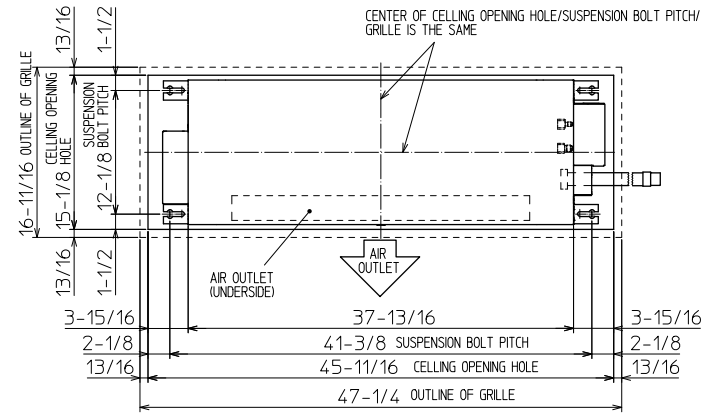

(FRONT VIEW)

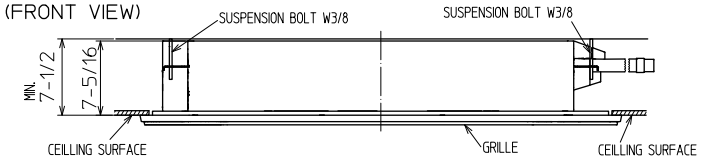

THE METHOD FOR STANDING DRAIN FROM INDOOR UNIT
※ CUT THE DRAIN HOSE (ACCESSORY) FOR USE, IF NECESSARY.

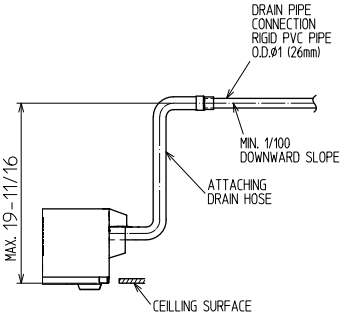

© 2022 Mitsubishi Electric Trane HVAC US LLC. All rights reserved.

OUTDOOR UNIT DIMENSIONS: SUZ-KA18NAHZ

Unit: inch

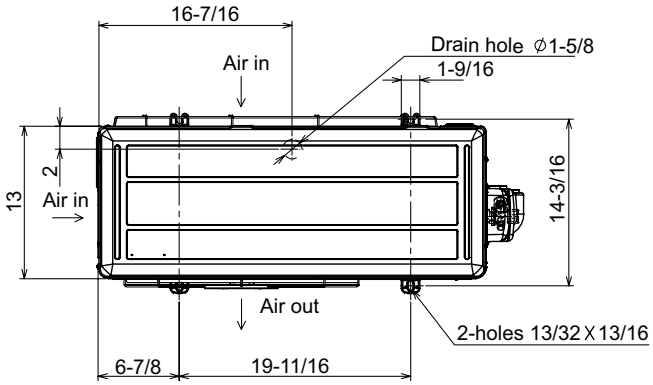

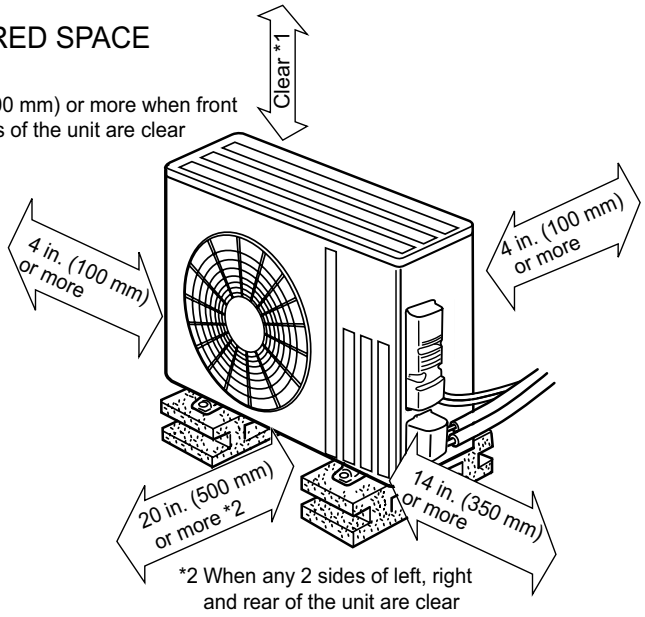

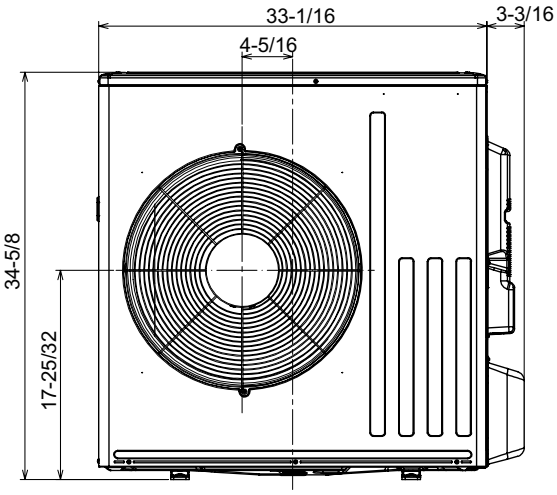

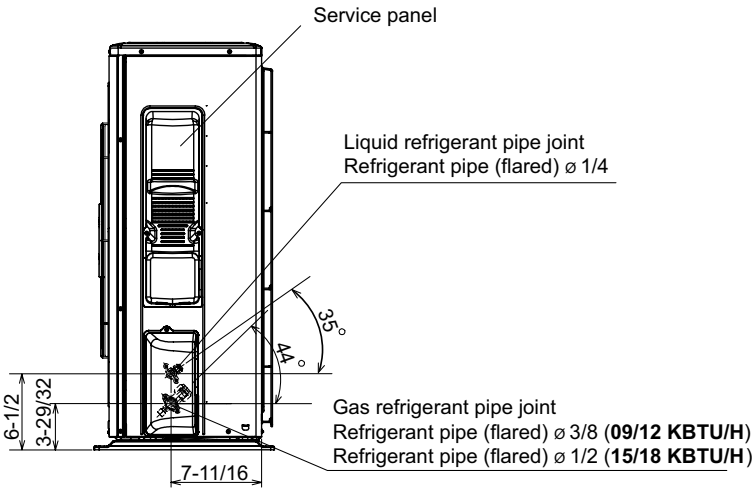

1340 Satellite Boulevard Suwanee, GA 30024
Toll Free: 800-433-4822 www.mehvac.com

FORM# MLZ-KP18NA2 & SUZ-KA18NAHZ - 202211

Specifications are subject to change without notice.

© 2022 Mitsubishi Electric Trane HVAC US LLC. All rights reserved.