MITSUBISHI ELECTRIC

SPLIT-SYSTEM HEAT PUMP

February 2023

No. TCB118

PARTS CATALOG

Series SLZ Ceiling Cassettes R410A

Indoor unit [Model Name]	[Service Ref.]
SLZ-KF09NA1	SLZ-KF09NA1
SLZ-KF12NA1	SLZ-KF12NA1
SLZ-KF15NA1	SLZ-KF15NA1
SLZ-KF18NA1	SLZ-KF18NA1

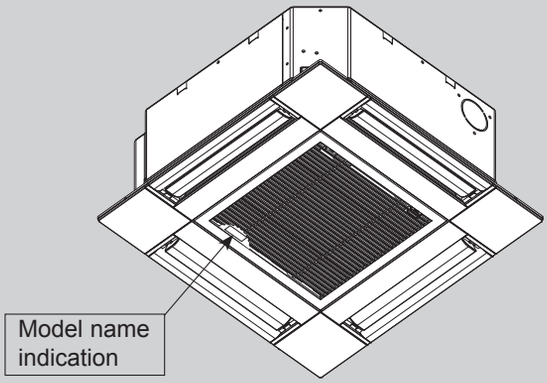

INDOOR UNIT

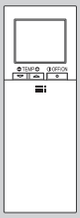

WIRELESS REMOTE CONTROLLER (Option)

WIRED REMOTE CONTROLLER (Option)

CONTENTS

1. SERVICE PARTS LIST 2
2. OPTIONAL PARTS 6

SERVICE MANUAL (TCH118)

1 SERVICE PARTS LIST

GRILLE PARTS
SLP-18FAU (Standard)
SLP-18FAEU (with i-see Sensor)

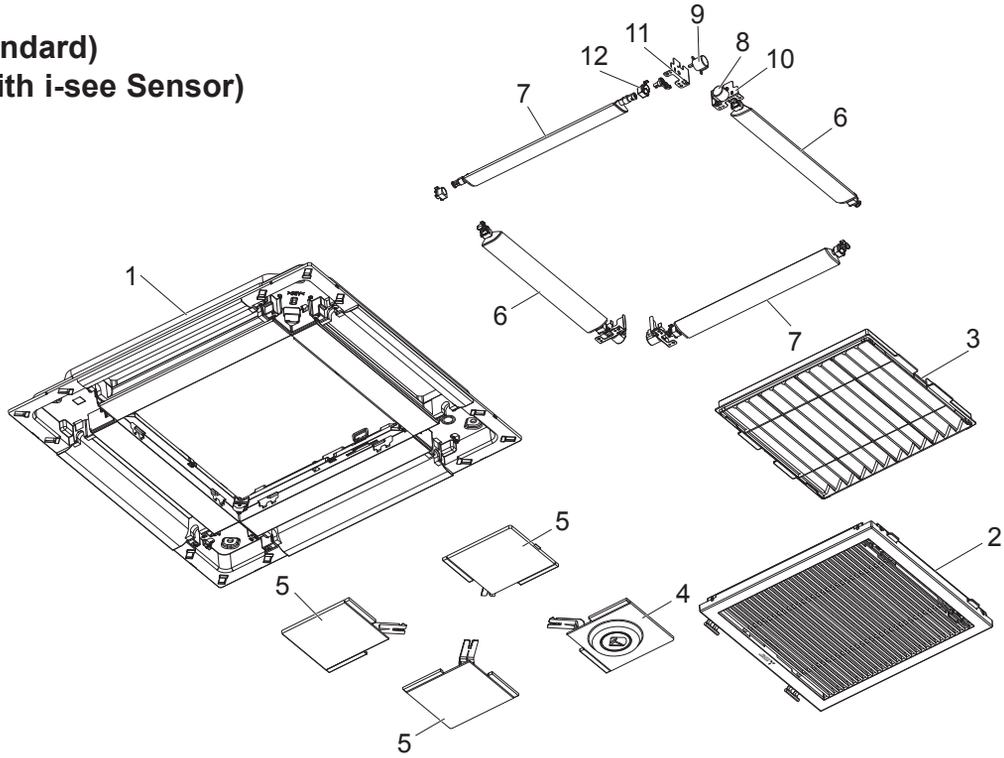

Parts numbers that are circled are not shown in the figure.

Main Function & Equipped Optional Items	SLP-18FAU	SLP-18FAEU	Remarks
Wireless Remote Controller			Signal Sender
i-see Sensor Corner Panel (PAC-SF1ME-E)		✓	
Wireless Remote Controller for AFE(Exclusive)			Small size Signal Sender

No.	Parts No.	Parts Name	Specification	Q'ty/unit SLP-18FAU	Q'ty/unit SLP-18FAEU	Remarks (Drawing No.)	Wiring Diagram Symbol
1	E27 C26 003	AIR OUTLET GRILLE		1	1		
2	E27 C26 010	INTAKE GRILLE		1	1		
3	E27 C26 100	AIR FILTER		1	1		
4	E27 C29 975	CORNER PANEL (i-see Sensor)			1		
5	E27 C26 975	CORNER PANEL	with safety strap	4	3		
6	E27 C26 037	AUTO VANE -1	GREEN	2	2		
7	E27 C27 037	AUTO VANE -2	BLUE	2	2		
8	E27 C26 303	VANE MOTOR-1	GREEN	2	2		
9	E27 C27 303	VANE MOTOR-2	BLUE	2	2		
10	E27 C26 946	COUPLING-1	GREEN	2	2		
11	E27 C27 946	COUPLING-2	BLUE	2	2		
12	E27 C26 044	VANE BUSH		8	8		
13	E27 C26 033	WIRE HOOK		2	2		
14	E27 C27 087	JUNCTION CABLE (i-see Sensor)			1		

ELECTRICAL PARTS

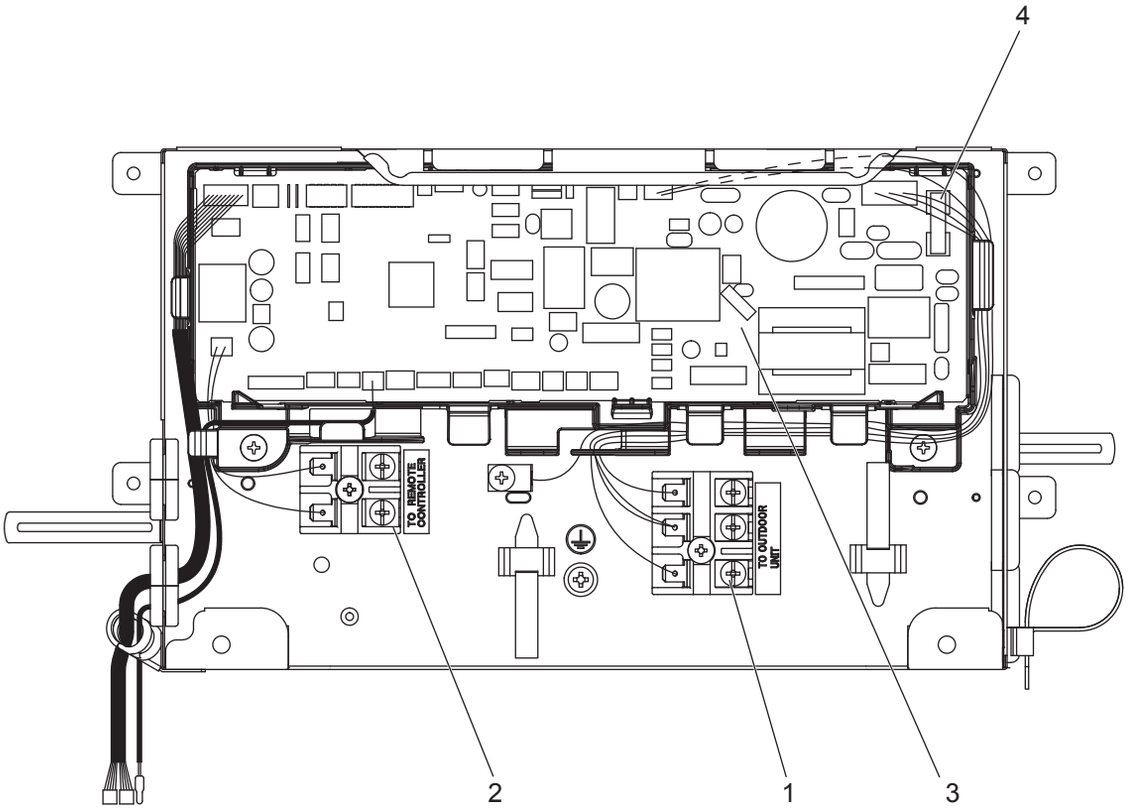

No.	Parts No.	Parts Name	Specification	Q'ty/unit				Remarks (Drawing No.)	Wiring Diagram Symbol
				SLZ-KF09NA1	SLZ-KF12NA1	SLZ-KF15NA1	SLZ-KF18NA1		
1	E27 78R 375	TERMINAL BLOCK	3P(S1,S2,S3)	1	1	1	1		TB4
2	E27 156 375	TERMINAL BLOCK	2P(1,2)	1	1	1	1		TB5
3	E27 81T 447	INDOOR CONTROLLER BOARD		1	1	1	1		I.B
4	E27 78R 382	FUSE	FJL 250V/6.3A	1	1	1	1		F1

FUNCTIONAL PARTS
SLZ-KF09NA1
SLZ-KF12NA1
SLZ-KF15NA1
SLZ-KF18NA1

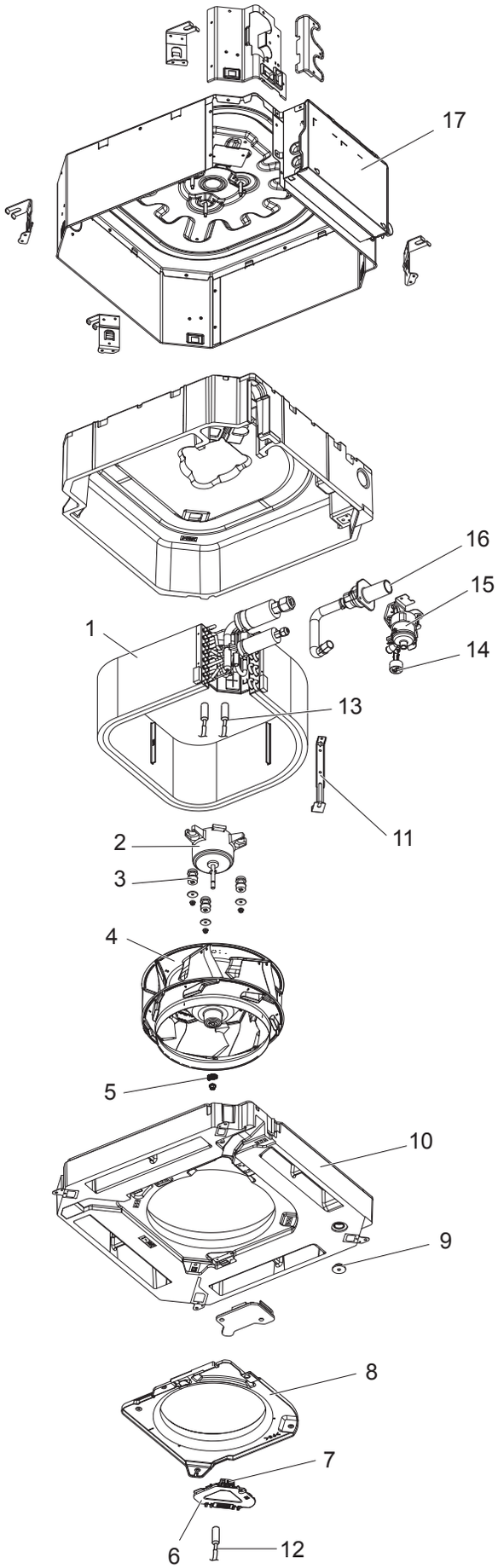

FUNCTIONAL PARTS

Parts numbers that are circled are not shown in the figure.

No.	Parts No.	Parts Name	Specification	Q'ty/unit				Remarks (Drawing No.)	Wiring Diagram Symbol
				SLZ-KF09NA1	SLZ-KF12NA1	SLZ-KF15NA1	SLZ-KF18NA1		
1	E27 C12 620	INDOOR HEAT EXCHANGER		1	1				
	E27 C14 620	INDOOR HEAT EXCHANGER				1	1		
2	E27 K05 300	INDOOR FAN MOTOR		1	1	1	1		MF
3	E27 C12 105	MOTOR MOUNT		3	3	3	3	3PCS/SET	
4	E27 C12 502	TURBO FAN		1	1	1	1		
5	E27 K05 097	FAN WASHER&NUT		1	1	1	1		
6	E27 C12 091	CONNECTOR COVER		1	1	1	1		
7	E27 C12 090	CONNECTOR BOX		1	1	1	1		
8	E27 C12 509	BELL MOUTH		1	1	1	1		
9	E27 436 524	DRAIN PLUG		1	1	1	1		
10	E27 C12 700	DRAIN PAN		1	1	1	1		
11	E27 C12 648	COIL SUPPORT		1	1	1	1		
12	E27 C12 308	THERMISTOR		1	1	1	1		TH1
13	E27 C12 307	THERMISTOR		1	1	1	1		TH2,TH5
14	E27 C12 145	FLOAT SWITCH ASSY		1	1	1	1		FS
15	E27 81T 355	DRAIN PUMP		1	1	1	1		DP
16	E27 C12 702	DRAIN HOSE		1	1	1	1		
17	E27 K05 088	CONTROL BOX COVER		1	1	1	1		
18	E27 M08 097	WASHER		4	4	4	4	4PCS/SET	
19	E27 M09 910	PIPE COVER		1	1	1	1		
20	E27 580 704	DRAIN SOCKET		1	1	1	1		

2 OPTIONAL PARTS

Parts name	Parts No.
3D i-see sensor corner panel	PAC-SF1ME-E
Signal receiver corner panel	PAR-SF9FA-E
Wired remote controller	PAR-41MAA, PAC-YT63CRAU
Wireless remote controller	PAR-SL101A-E
Wi-Fi interface	MAC-5577IF-E
Remote operation adapter	PAC-SF40RM-E
Remote sensor	PAC-SE41TS-E
Remote On/Off Adapter	PAC-SE55RA-E

MITSUBISHI ELECTRIC CORPORATION
HEAD OFFICE: TOKYO BUILDING, 2-7-3, MARUNOUCHI, CHIYODA-KU, TOKYO 100-8310, JAPAN

MITSUBISHI ELECTRIC CONSUMER PRODUCTS (THAILAND) CO., LTD.
700/406 MOO 7, TAMBON DON HUA ROH,
AMPHUR MUANG, CHONBURI 20000 THAILAND
Published: Feb. 2023 No. TCB118
Made in Thailand

Specifications are subject to change without notice.