M-SERIES

SUBMITTAL DATA: SLZ-KA12NA & SUZ-KA12NA
12,000 BTU/H CEILING-CASSETTE HEAT-PUMP SYSTEMS

Job Name:	
System Reference:	Date:

Indoor Unit: SLZ-KA12NA	Outdoor Unit: SUZ-KA12NA

INDOOR UNIT FEATURES

- Ceiling-recessed cassette (24"x24") ductless heat pump
- Install SLZ in a drywalled ceiling (with an access panel for servicing) or in a 2'x2' drop ceiling
- Wide airflow pattern for excellent air distribution
- Fresh air intake provided in the main body
- Built-in drain condensate lift mechanism
- Multiple control options available:
  - kumo cloud® smart device app for remote access
  - Third-party interface options
  - Wired or wireless controllers
- Long-life air filter included

OUTDOOR UNIT FEATURES

- Variable speed INVERTER-driven compressor
- Innovative Joint Lap DC Motor leads to high efficiency and reliability
- Pulse Amplitude Modulation technology
- High-performance grooved piping for increased heat exchange efficiency

Specifications are subject to change without notice.

© 2019 Mitsubishi Electric Trane HVAC US LLC. All rights reserved.

SPECIFICATIONS: SLZ-KA12NA & SUZ-KA12NAR1

Cooling[1]	Maximum Capacity	Btu/h	13,300
	Rated Capacity	Btu/h	11,100
	Minimum Capacity	Btu/h	3,400
	Maximum Power Input	W	1,140
	Rated Power Input	W	920
	Moisture Removal	Pints/h	2.3
	Sensible Heat Factor		0.77
	Power Factor	%	96/96
Heating at 47°F[2]	Maximum Capacity	Btu/h	17,100
	Rated Capacity	Btu/h	13,600
	Minimum Capacity	Btu/h	3,100
	Maximum Power Input	W	1,430
	Rated Power Input	W	1,180
	Power Factor	%	97/97
Heating at 17°F[3]	Maximum Capacity	Btu/h	10,200
	Rated Capacity	Btu/h	8,300
	Maximum Power Input	W	1,310
	Rated Power Input	W	930
Heating at 5°F[4]	Maximum Capacity	Btu/h	7,900
	Maximum Power Input	W	1,000
Efficiency	SEER		15.4
	EER[1]		12.0
	HSPF (IV)		9.6
	COP at 47°F[2]		3.38
	COP at 17°F in Maximum Capacity[3]		2.28
	COP at 5°F in Maximum Capacity[4]		2.32
Electrical	Voltage, Phase, Frequency		208/230V, 1 phase, 60Hz
	Guaranteed Voltage Range	V AC	187-253
	Voltage: Indoor - Outdoor, S1-S2	V AC	208/230
	Voltage: Indoor - Outdoor, S2-S3	V DC	24
	Voltage: Indoor - Remote Controller	V DC	12
	Recommended Fuse/Breaker Size	A	15
	Recommended Wire Size (Indoor - Outdoor)	AWG	14
Indoor Unit	MCA	A	1
	MOCP	A	15
	Blower Motor Full Load Amperage	A	0.28
	Blower Motor Output	W	20
	Airflow Rate at Cooling, Dry	CFM	390-320-280
	Airflow Rate at Cooling, Wet	CFM	350-290-250
	Airflow Rate at Heating, Dry	CFM	390-320-280
	Sound Pressure Level (Cooling)	dB(A)	39-34-30

Specifications are subject to change without notice.

© 2019 Mitsubishi Electric Trane HVAC US LLC. All rights reserved.

SPECIFICATIONS: SLZ-KA12NA & SUZ-KA12NAR1

	Sound Pressure Level (Heating)	dB(A)	39-34-30
	Drain Pipe Size	In. (mm)	1 1/4 (32)
	Condensate Lift Mechanism, Maximum Distance	In. (mm)	19-11/16 (500)
	Heat Exchanger Type		Plate fin coil
	External Finish Color		Munsell 6.4Y 8.9/0.4
	Unit Dimensions	W: In. (mm)	22 7/16 (570)
		D: In. (mm)	22 7/16 (570)
		H: In. (mm)	9 1/4 (235)
	Package Dimensions	W: In. (mm)	24 13/32 (620)
		D: In. (mm)	27 15/16 (710)
		H: In. (mm)	9 7/16 (240)
	Unit Weight	Lbs. (kg)	36 (17)
	Package Weight	Lbs. (kg)	43 (20)
Indoor Unit Operating Temperature Range	Cooling Intake Air Temp (Maximum / Minimum)*	°F	95 DB / 71 WB // 67 DB / 57 WB
	Heating Intake Air Temp (Maximum / Minimum)	°F	80 DB // 70 DB
Outdoor Unit	MCA	A	12
	MOCP	A	15
	Fan Motor Full Load Amperage	A	0.5
	Fan Motor Output	W	55
	Airflow Rate	CFM	1,229 / 1,172
	Refrigerant Control		LEV
	Defrost Method		Reverse cycle
	Heat Exchanger Type		Plate fin coil
	Sound Pressure Level, Cooling[1]	dB(A)	49
	Sound Pressure Level, Heating[2]	dB(A)	51
	Compressor Type		INVERTER-driven
	Compressor Model		KNB092FQAHC
	Compressor Rated Load Amps	A	6.6
	Compressor Locked Rotor Amps	A	8.2
	Compressor Oil Type // Charge	oz.	NEO22 // 10.8
	External Finish Color		Munsell 3Y 7.8/1/1
	Base Pan Heater		Optional (MAC-640BH-U)
	Unit Dimensions	W: In. (mm)	31-1/2 (800)
		D: In. (mm)	11-1/4 (285)
		H: In. (mm)	21-5/8 (550)
	Package Dimensions	W: In. (mm)	37 (940)
		D: In. (mm)	14-15/16 (380)
		H: In. (mm)	24-13/16 (630)
	Unit Weight	Lbs. (kg)	77 (35)
	Package Weight	Lbs. (kg)	84 (38)
Outdoor Unit Operating Temperature Range	Cooling Air Temp (Maximum / Minimum)*	°F	115 / 14

Specifications are subject to change without notice.

© 2019 Mitsubishi Electric Trane HVAC US LLC. All rights reserved.

SPECIFICATIONS: SLZ-KA12NA & SUZ-KA12NAR1

	Cooling Thermal Lock-out / Re-start Temperatures**	°F	-7 / -4
	Heating Air Temp (Maximum / Minimum)	°F	75 / -4
	Heating Thermal Lock-out / Re-start Temperatures**	°F	-7 / -4
Refrigerant	Type		R410A
	Charge	Lbs, oz	2, 9
Piping	Gas Pipe Size O.D. (Flared)	In. (mm)	3/8 (9.52)
	Liquid Pipe Size O.D. (Flared)	In. (mm)	1/4 (6.35)
	Maximum Piping Length	Ft. (m)	65 (20)
	Maximum Height Difference	Ft. (m)	40 (12)
	Maximum Number of Bends		10

Notes

AHRI Rated Conditions (Rated data is determined at a fixed compressor speed)	[1]Cooling (Indoor // Outdoor)	°F	80 DB, 67 WB // 95 DB, 75 WB
	[2]Heating at 47°F (Indoor // Outdoor)	°F	70 DB, 60 WB // 47 DB, 43 WB
	[3]Heating at 17°F (Indoor // Outdoor)	°F	70 DB, 60 WB // 17 DB, 15 WB
Conditions	[4]Heating at 5°F (Indoor // Outdoor)	°F	70 DB, 60 WB // 5 DB, 4 WB

*Applications should be restricted to comfort cooling only; equipment cooling applications are not recommended for low ambient temperature conditions.
**System cuts out in heating mode to avoid thermistor error and automatically restarts at these temperatures.

Specifications are subject to change without notice.

© 2019 Mitsubishi Electric Trane HVAC US LLC. All rights reserved.

ACCESSORIES: SLZ-KA12NA

Wireless Signal Receiver	□ PAR-FA32MA-W
Wireless Signal Receiver	□ PAR-FA32MA-E
Wireless Remote Controller	□ PAR-FL32MA-E
Backlit, Wall-mounted, Wireless Controller	□ MHK1
Portable Central Controller	□ MCCH1
Wired MA Controller	□ PAR-33MAA
Simple MA Controller	□ PAC-YT53CRAU
Touch MA Controller	□ PAR-CT01MAU-SB
Wired Remote Sensor	□ PAC-SE41TS-E
Wireless Temperature and Humidity Sensor	□ PAC-USWHS003-TH-1
Outside Air Sensor for MHK1	□ MOS1
Flush Mount Remote Temperature Sensor	□ PAC-USSEN001-FM-1
System Control Interface	□ MAC-333IF-E
Wireless Interface	□ PAC-USWHS002-WF-1
Thermostat Interface	□ PAC-US444CN-1
kumo station®	□ PAC-WHS01HC-E
USNAP Interface	□ PAC-WHS01UP-E
IT Extender	□ PAC-WHS01IE-E
BACnet® and MODBUS® Interface	□ PAC-UKPRC001-CN-1
External Fan / Heater Control Relay Adapter	□ CN24RELAY-KIT-CM3
Wire for Remote on/off with CN32 connector	□ PAC-715AD
Connector and wire for Operation status/error using CN51	□ PAC-725AD
Connector cable for remote display	□ PAC-SA88HA-EP
Connector for CN32 (remote on/off)	□ PAC-SE55RA-E
Remote Operation Adapter[1]	□ PAC-SF40RM-E
Grille (required)	□ SLP-15AAUW
External Drain Pump	□ PAC-KE07DM-E
Blue Diamond Sensor Extension Cable — 15 Ft.	□ C13-103
Blue Diamond Alarm Extension Cable — 6.5 Ft.	□ C13-192
Blue Diamond MultiTank — collection tank for use with multiple pumps	□ C21-014
Blue Diamond Rubber Foot Pads	□ F10-010
Mini Condensate Pump — 230 volt application	□ SI30-230
MegaBlue Advanced Blue Diamond Condensate Pump w/ Reservoir & Sensor	□ X87-835 - 110 to 250V
Advanced Blue Diamond Mini Condensate Pump w/ Reservoir & Sensor (208/230V) [recommended]	□ X87-721 - 208/230V
Drain Pan Level Sensor	□ DPLS2
(30A/600V/UL) [fits 2" X 4" utility box] - Black	□ TAZ-MS303
(30A/600V/UL) [fits 2" X 4" utility box] - White	□ TAZ-MS303W

[1] Unable to use with wireless remote controller

Specifications are subject to change without notice.

© 2019 Mitsubishi Electric Trane HVAC US LLC. All rights reserved.

ACCESSORIES: SUZ-KA12NAR1

Air Outlet Guide	□ MAC-881SG
Optional Defrost Heater	□ MAC-640BH-U
Hail Guard	□ HG-B4
Outdoor Unit 3-1/4 inch Mounting Base (Pair) - Plastic	□ DSD-400P
Condensing Unit Mounting Pad 16" x 36" x 3"	□ ULTRILITE1
Outdoor Unit Stand — 12" High	□ QSMS1201M
Outdoor Unit Stand — 18" High	□ QSMS1801M
Outdoor Unit Stand — 24" High	□ QSMS2401M
Heavy Duty Wall Mounting Bracket— Coated Steel	□ QSWB2000M-1
Heavy Duty Wall Mounting Bracket — 316 Series Stainless Steel	□ QSWBSS
15' x 1/4" x 15' / 3/8" Lineset (Twin-Tube Insulation)	□ MLS143812T-15
30' x 1/4" x 30' / 3/8" Lineset (Twin-Tube Insulation)	□ MLS143812T-30
50' x 1/4" x 50' / 3/8" Lineset (Twin-Tube Insulation)	□ MLS143812T-50
65' x 1/4" x 65' / 3/8" Lineset (Twin-Tube Insulation)	□ MLS143812T-65

Specifications are subject to change without notice.

© 2019 Mitsubishi Electric Trane HVAC US LLC. All rights reserved.

DIMENSIONS: SLZ-KA12NA

Unit: inch(mm)

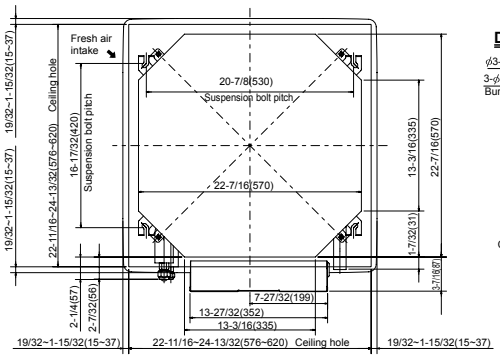

Detail drawing of fresh air intake

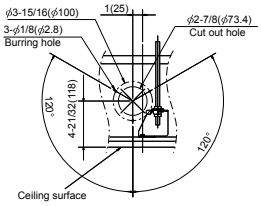

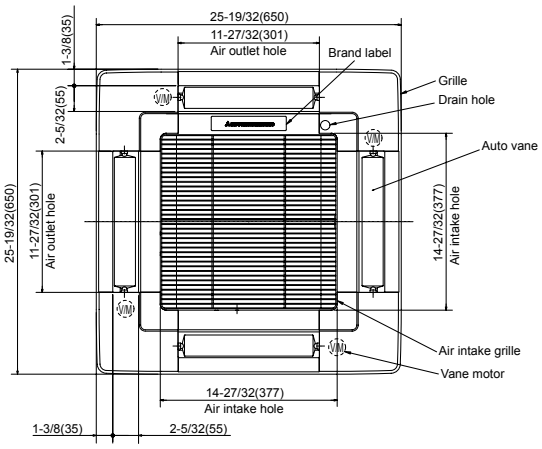

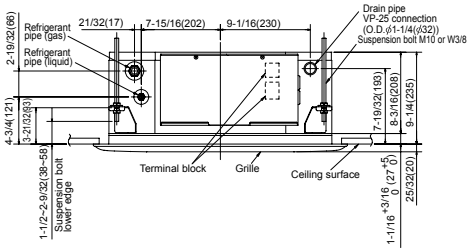

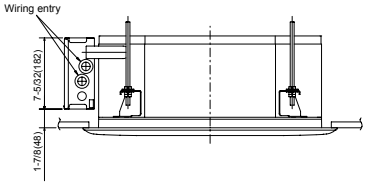

Models	Refrigerant pipe (liquid)	Refrigerant pipe (gas)
SLZ-KA09NA	1/4 inch (ϕ 6.35mm) flared connection	3/8 inch (ϕ 9.52mm) flared connection
SLZ-KA12NA	1/4 inch (ϕ 6.35mm) flared connection	3/8 inch (ϕ 9.52mm) flared connection
SLZ-KA15NA	1/4 inch (ϕ 6.35mm) flared connection	1/2 inch (ϕ 12.7mm) flared connection

© 2019 Mitsubishi Electric Trane HVAC US LLC. All rights reserved.

DIMENSIONS: SUZ-KA12NAR1

Unit: inch

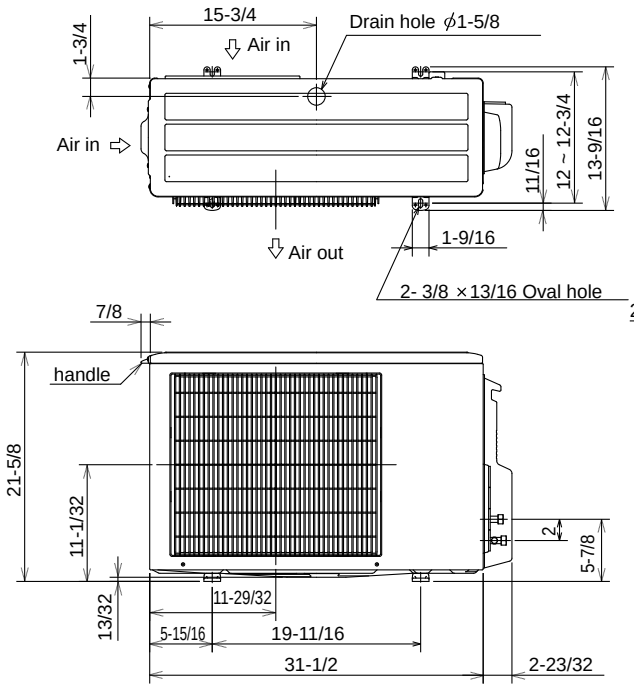

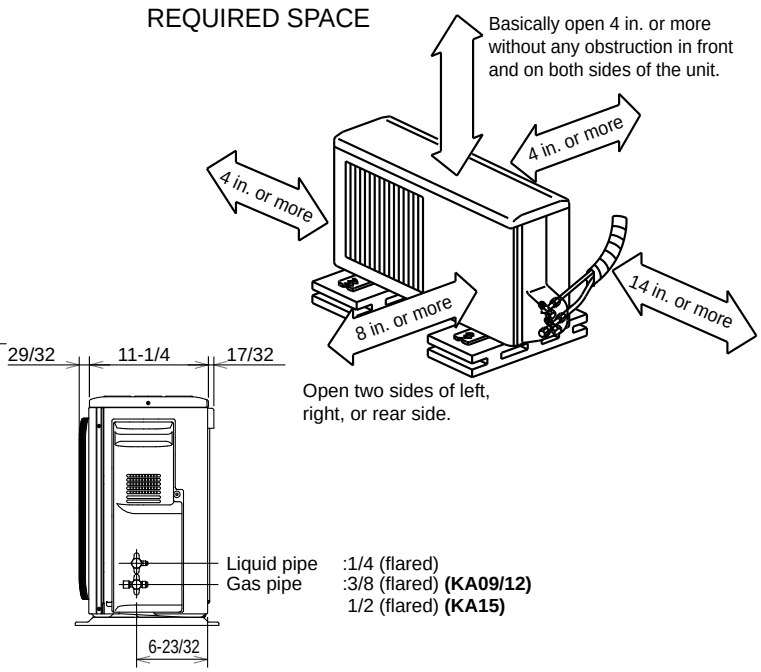

MITSUBISHI ELECTRIC

COOLING & HEATING

1340 Satellite Boulevard, Suwanee, GA 30024
Toll Free: 800-433-4822 www.mehvac.com

FORM# SLZ-KA12NA / SUZ-KA12NA - 201903

Specifications are subject to change without notice.

© 2019 Mitsubishi Electric Trane HVAC US LLC. All rights reserved.