MITSUBISHI ELECTRIC

SPLIT-SYSTEM HEAT PUMP

February 2022

No. TCH070

REVISED EDITION-A

SERVICE MANUAL

Series PLA Ceiling Cassettes R410A

Indoor unit [Model Name]	[Service Ref.]
PLA-A12EA7	PLA-A12EA7R1.TH
PLA-A18EA7	PLA-A18EA7R1.TH
PLA-A24EA7	PLA-A24EA7R1.TH
PLA-A30EA7	PLA-A30EA7R1.TH
PLA-A36EA7	PLA-A36EA7R1.TH
PLA-A42EA7	PLA-A42EA7R1.TH

Grille model [Model Name]

PLP-41EAEU

Revision:
- OUTLINES AND DIMENSIONS have been revised in REVISED EDITION-A.
- Some descriptions have been modified.

TCH070 is void.

Notes:
- This manual describes service data of the indoor units only.

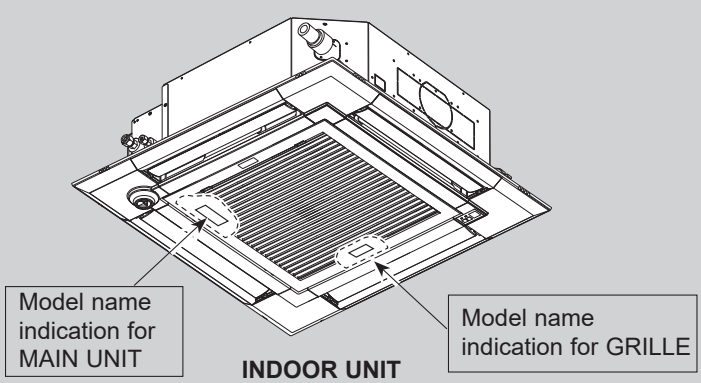

INDOOR UNIT

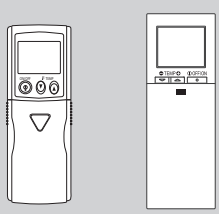

IR WIRELESS REMOTE CONTROLLER (Option)

WIRED REMOTE CONTROLLER (Option)

CONTENTS

1. REFERENCE MANUAL 2
2. SAFETY PRECAUTION 3
3. PARTS NAMES AND FUNCTIONS 6
4. SPECIFICATIONS 15
5. NOISE CRITERION CURVES 17
6. OUTLINES AND DIMENSIONS 19
7. WIRING DIAGRAM 20
8. REFRIGERANT SYSTEM DIAGRAM 21
9. TROUBLESHOOTING 22
10. FUNCTION SETTING 37
11. SPECIAL FUNCTION 38
12. DISASSEMBLY PROCEDURE 42

PARTS CATALOG (TCB070)

Mr.SLIM

1 REFERENCE MANUAL

OUTDOOR UNIT SERVICE MANUAL

Model Name	Service Ref.	Service Manual No. Parts Catalog No.
MXZ-3C24/30NA2, MXZ-4C36NA2 MXZ-3C24/30NAHZ2 MXZ-5C42NA2	MXZ-3C24/30NA2-U1, MXZ-4C36NA2-U1 MXZ-3C24/30NAHZ2-U1 MXZ-5C42NA2-U1	OBH702H OBB702E
MXZ-4C36NAHZ2 MXZ-5C42NAHZ2 MXZ-8C48NA2, MXZ-8C48NAHZ2 MXZ-8C60NA2	MXZ-4C36NAHZ2-U1 MXZ-5C42NAHZ2-U1 MXZ-8C48NA2-U1, MXZ-8C48NAHZ2-U1 MXZ-8C60NA2-U1	OCH730A OCB730A
PUZ-A12/18/36/42NK7(-BS) PUZ-A24/30NHA7(-BS) PUY-A12/18/36/42NKA7(-BS) PUY-A24/30NHA7(-BS)	PUZ-A12/18/36/42NK7(-BS) PUZ-A24/30NHA7(-BS) PUY-A12/18/36/42NKA7(-BS) PUY-A24/30NHA7(-BS)	OCH636D OCB636A
PUZ-HA24NHA1 PUZ-HA30/36NKA PUZ-HA42NKA1	PUZ-HA24NHA1 PUZ-HA30/36NKA PUZ-HA42NKA1	OCH750B OCB750

■ **Remote controller (Optional parts)**

Wired remote controller	IR wireless remote controller
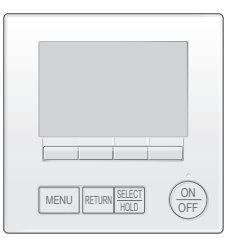	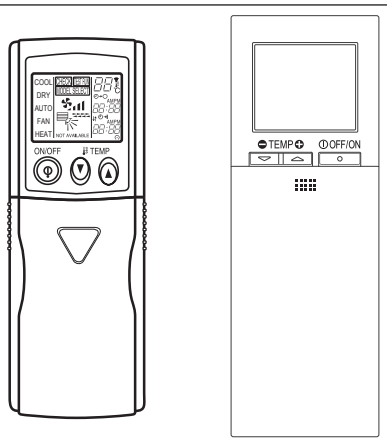

TCH070A.indd 2 7/2/2565 16:46:44

2 SAFETY PRECAUTION

2-1. ALWAYS OBSERVE FOR SAFETY

Before obtaining access to terminal, all supply circuits must be disconnected.

2-2. CAUTIONS RELATED TO NEW REFRIGERANT

Cautions for units utilising refrigerant R410A

Use new refrigerant pipes.

Make sure that the inside and outside of refrigerant piping is clean and it has no contaminants such as sulfur, oxides, dirt, shaving particles, etc, which are hazards to refrigerant cycle.
In addition, use pipes with specified thickness.

Contamination inside refrigerant piping can cause deterioration of refrigerant oil, etc.

Store the piping indoors, and keep both ends of the piping sealed until just before brazing. (Leave elbow joints, etc. in their packaging.)

If dirt, dust or moisture enters into refrigerant cycle, that can cause deterioration of refrigerant oil or malfunction of compressor.

The refrigerant oil applied to flare and flange connections must be ester oil, ether oil or alkylbenzene oil in a small amount.

If large amount of mineral oil enters, that can cause deterioration of refrigerant oil, etc.

Charge refrigerant from liquid phase of gas cylinder.

If the refrigerant is charged from gas phase, composition change may occur in refrigerant and the efficiency will be lowered.

Do not use refrigerant other than R410A.

If other refrigerant (R22, etc.) is used, chlorine in refrigerant can cause deterioration of refrigerant oil, etc.

Use a vacuum pump with a reverse flow check valve.

Vacuum pump oil may flow back into refrigerant cycle and that can cause deterioration of refrigerant oil, etc.

Use the following tools specifically designed for use with R410A refrigerant.

The following tools are necessary to use R410A refrigerant.

Tools for R410A	
Gauge manifold	Flare tool
Charge hose	Size adjustment gauge
Gas leak detector	Vacuum pump adaptor
Torque wrench	Electronic refrigerant charging scale

Handle tools with care.

If dirt, dust or moisture enters into refrigerant cycle, that can cause deterioration of refrigerant oil or malfunction of compressor.

Do not use a charging cylinder.

If a charging cylinder is used, the composition of refrigerant will change and the efficiency will be lowered.

Ventilate the room if refrigerant leaks during operation. If refrigerant comes into contact with a flame, poisonous gases will be released.

Use the specified refrigerant only.

Never use any refrigerant other than that specified.
Doing so may cause a burst, an explosion, or fire when the unit is being used, serviced, or disposed of.
Correct refrigerant is specified in the manuals and on the spec labels provided with our products.
We will not be held responsible for mechanical failure, system malfunction, unit breakdown or accidents caused by failure to follow the instructions.

TCH070A.indd 3 7/2/2565 16:46:45

[1] Warning for service

(1) Do not alter the unit.
(2) For installation and relocation work, follow the instructions in the Installation Manual and use tools and pipe components specifically made for use with refrigerant specified in the outdoor unit installation manual.
(3) Ask a dealer or an authorized technician to install, relocate and repair the unit.
(4) This unit should be installed in rooms which exceed the floor space specified in outdoor unit installation manual. Refer to outdoor unit installation manual.
(5) Install the indoor unit at least 2.5 m above floor or grade level.
For appliances not accessible to the general public.
(6) Refrigerant pipes connection shall be accessible for maintenance purposes.
(7) If the air conditioner is installed in a small room or closed room, measures must be taken to prevent the refrigerant concentration in the room from exceeding the safety limit in the event of refrigerant leakage. Should the refrigerant leak and cause the concentration limit to be exceeded, hazards due to lack of oxygen in the room may result.
(8) Keep gas-burning appliances, electric heaters, and other fire sources (ignition sources) away from the location where installation, repair, and other air conditioner work will be performed.
If refrigerant comes into contact with a flame, poisonous gases will be released.
(9) When installing or relocating, or servicing the air conditioner, use only the specified refrigerant written on outdoor unit to charge the refrigerant lines.
Do not mix it with any other refrigerant and do not allow air to remain in the lines.
If air is mixed with the refrigerant, then it can be the cause of abnormal high pressure in the refrigerant line, and may result in an explosion and other hazards.
(10) After installation has been completed, check for refrigerant leaks. If refrigerant leaks into the room and comes into contact with the flame of a heater or portable cooking range, poisonous gases will be released.
(11) Do not use low temperature solder alloy in case of brazing the refrigerant pipes.
(12) When performing brazing work, be sure to ventilate the room sufficiently. Make sure that there are no hazardous or flammable materials nearby.
When performing the work in a closed room, small room, or similar location, make sure that there are no refrigerant leaks before performing the work.
If refrigerant leaks and accumulates, it may ignite or poisonous gases may be released.
(13) Do not install the unit in places where refrigerant may build-up or places with poor ventilation such as a semi-basement or a sunken place in outdoor: Refrigerant is heavier than air, and inclined to fall away from the leak source.
(14) Do not use means to accelerate the defrosting process or to clean, other than those recommended by the manufacturer.
(15) The appliance shall be stored in a room without continuously operating ignition sources (for example: open flames, an operating gas appliance or an operating electric heater).
(16) Do not pierce or burn.
(17) Be aware that refrigerants may not contain an odour.
(18) Pipe-work shall be protected from physical damage.
(19) The installation of pipe-work shall be kept to a minimum.
(20) Compliance with national gas regulations shall be observed.
(21) Keep any required ventilation openings clear of obstruction.
(22) Servicing shall be performed only as recommended by the manufacturer.
(23) The appliance shall be stored in a well-ventilated area where the room size corresponds to the room area as specified for operation.
(24) Maintenance, service and repair operations shall be performed by authorized technician with required qualification.

TCH070A.indd 4 7/2/2565 16:46:45

[2] Cautions for service

(1) Perform service after recovering the refrigerant left in the unit completely.
(2) Do not release refrigerant in the air.
(3) After completing service, charge the cycle with specified amount of refrigerant.
(4) When performing service, install a filter drier simultaneously.
Be sure to use a filter drier for new refrigerant.

[3] Additional refrigerant charge

When charging directly from cylinder

(1) Check that cylinder for R410A on the market is a syphon type.
(2) Charging should be performed with the cylinder of syphon stood vertically. (Refrigerant is charged from liquid phase.)

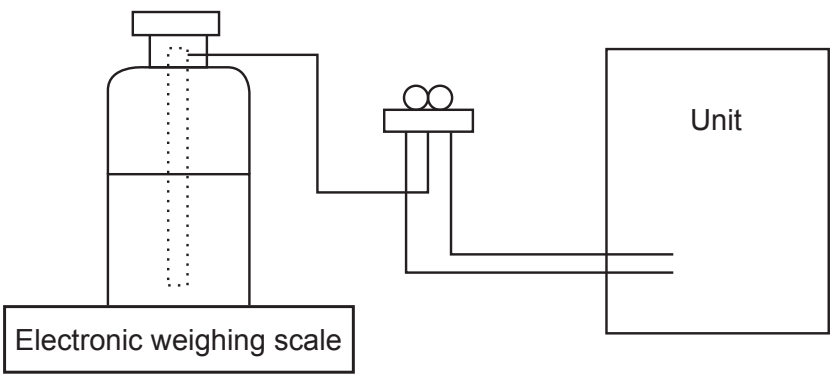

[4] Service tools

Use the below service tools as exclusive tools for R410A refrigerant.

No.	Tool name	Specifications
①	Gauge manifold	· Only for R410A
		· Use the existing fitting specifications. (UNF1/2)
		· Use high-tension side pressure of 768.7 PSIG [5.3MPa·G] or over.
②	Charge hose	· Only for R410A
		· Use pressure performance of 738.2 PSIG [5.09MPa·G] or over.
③	Electronic weighing scale	—
④	Gas leak detector	· Use the detector for R134a, R407C or R410A.
⑤	Adaptor for reverse flow check	· Attach on vacuum pump.
⑥	Refrigerant charge base	—
⑦	Refrigerant cylinder	· Only for R410A · Top of cylinder (Pink) · Cylinder with syphon
⑧	Refrigerant recovery equipment	—

TCH070A.indd 5 7/2/2565 16:46:45

3 PARTS NAMES AND FUNCTIONS

3-1. INDOOR UNIT

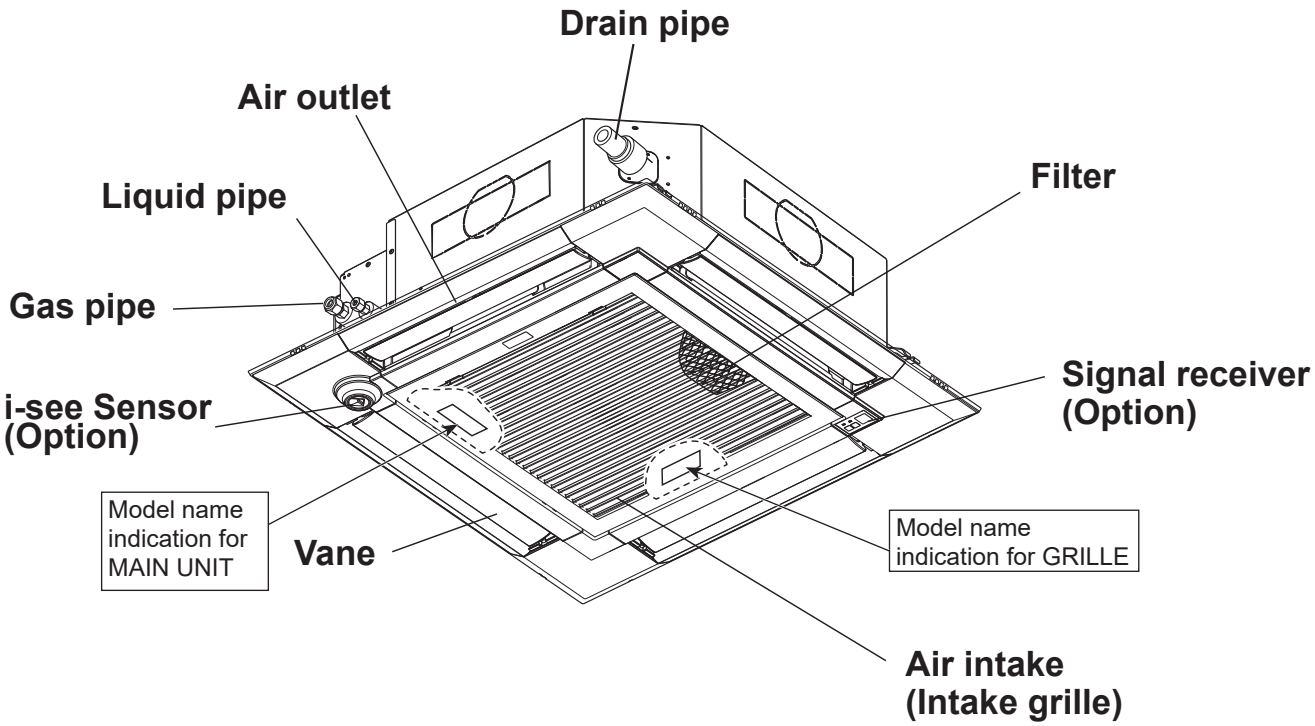

TCH070A.indd 6 7/2/2565 16:46:45

3-2. Wired Remote Controller <PAR-40MAA>

Controller interface

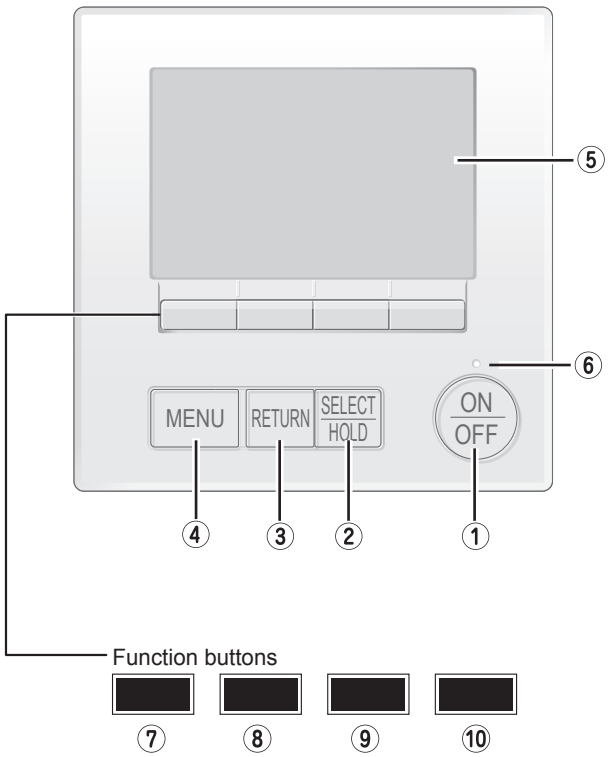

The functions of the function buttons change depending on the screen.
Refer to the button function guide that appears at the bottom of the LCD for the functions they serve on a given screen.
When the system is centrally controlled, the button function guide that corresponds to the locked button will not appear.

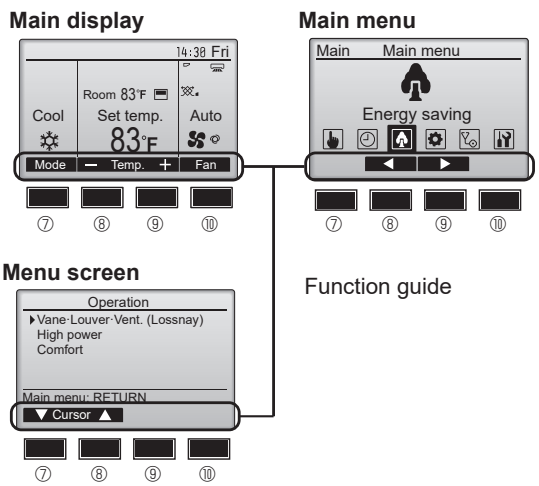

① [ON/OFF] button

Press to turn ON/OFF the indoor unit.

② [SELECT/HOLD] button

Press to save the setting.
When the Main menu is displayed, pressing this button will enable/disable the HOLD function.

③ [RETURN] button

Press to return to the previous screen.

④ [MENU] button

Press to bring up the Main menu.

⑤ Backlit LCD

Operation settings will appear.
When the backlight is off, pressing any button turns the backlight on and it will stay lit for a certain period of time depending on the screen.

When the backlight is off, pressing any button turns the backlight on and does not perform its function. (except for the [ON/OFF] button)

⑥ ON/OFF lamp

This lamp lights up in green while the unit is in operation. It blinks while the remote controller is starting up or when there is an error.

⑦ Function button [F1]

Main display: Press to change the operation mode.
Menu screen: The button function varies with the screen.

⑧ Function button [F2]

Main display: Press to decrease temperature.
Main menu: Press to move the cursor left.
Menu screen: The button function varies with the screen.

⑨ Function button [F3]

Main display: Press to increase temperature.
Main menu: Press to move the cursor right.
Menu screen: The button function varies with the screen.

⑩ Function button [F4]

Main display: Press to change the fan speed.
Menu screen: The button function varies with the screen.

TCH070A.indd 7 7/2/2565 16:46:45

Display

The main display can be displayed in two different modes: “Full” and “Basic”. The initial setting is “Full”. To switch to the “Basic” mode, change the setting on the Main display setting. (Refer to operation manual included with remote controller.)

<Full mode>

All icons are displayed for explanation.

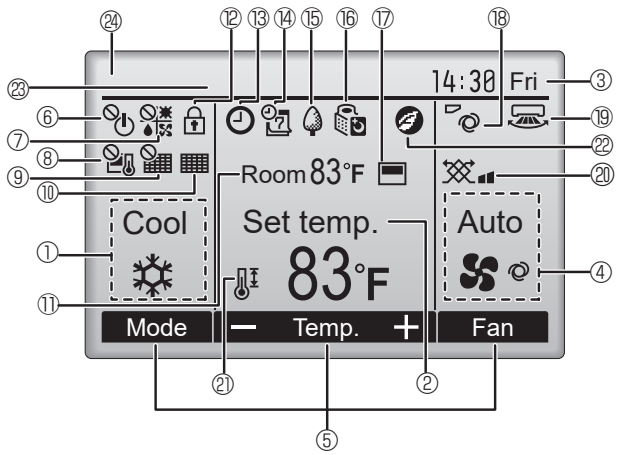

<Basic mode>

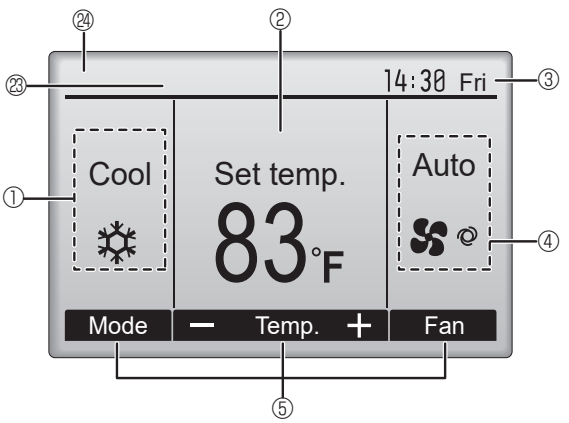

① Operation mode

② Preset temperature

③ Clock

④ Fan speed

⑤ Button function guide

Functions of the corresponding buttons appear here.

⑥

Appears when the ON/OFF operation is centrally controlled.

⑦

Appears when the operation mode is centrally controlled.

⑧

Appears when the preset temperature is centrally controlled.

⑨

Appears when the filter reset function is centrally controlled.

⑩

Indicates when filter needs maintenance.

⑪ Room temperature

⑫

Appears when the buttons are locked.

⑬

Appears when the On/Off timer or Auto-off timer function is enabled.

appears when the timer is disabled by the centralized control system.

appears when the HOLD function is enable.

⑭

Appears when the Weekly timer is enabled.

⑮

Appears while the units are operated in the energy saving mode. (Will not appear on some models of indoor units)

⑯

Appears while the outdoor units are operated in the silent mode.

⑰

Appears when the built-in thermistor on the remote controller is activated to monitor the room temperature (⑪).

appears when the thermistor on the indoor unit is activated to monitor the room temperature.

⑱

Indicates the vane setting.

⑲

Indicates the louver setting.

⑳

Indicates the ventilation setting.

㉑

Appears when the preset temperature range is restricted.

㉒

Appears when an energy saving operation is performed using a “3D i-See sensor” function.

㉓ Centrally controlled

Appears for a certain period of time when a centrally-controlled item is operated.

㉔ Preliminary error display

An check code appears during the preliminary error.

Most settings (except ON/OFF, mode, fan speed, temperature) can be made from the Main menu.

TCH070A.indd 8 7/2/2565 16:46:45

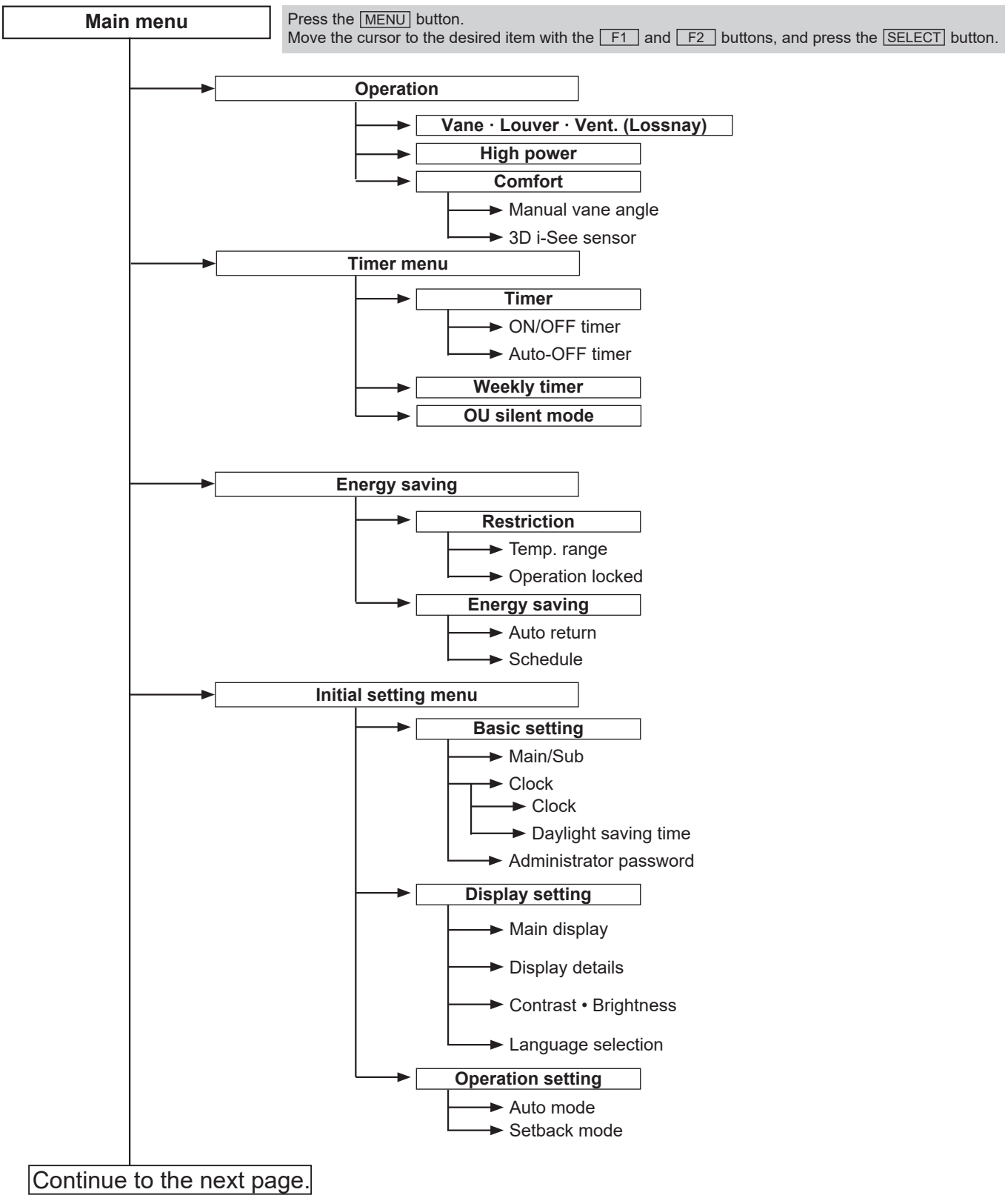

Not all functions are available on all models of indoor units.

TCH070A.indd 9 7/2/2565 16:46:45

Continue from the previous page.

- **Maintenance menu**
  - **Error information**
  - **Filter information**
  - **Cleaning**
    - Auto descending panel
      - Descending operation
      - Descending adjustment
- **Service menu**
  - **Test run menu**
    - Test run
    - Drain pump test run
  - **Maintenance information**
    - Model name input
    - Serial No. input
    - Dealer information input
    - Initialize maintenance info.
  - **Settings menu**
    - Function setting
  - **Check menu**
    - Error history
    - Diagnosis
      - Self check
      - Remote controller check
  - **Other menu**
    - Maintenance password
    - Initialize remote controller
    - Remote controller information

Not all functions are available on all models of indoor units.

TCH070A.indd 10 7/2/2565 16:46:45

Main menu list

Main menu	Setting and display items		Setting details
Operation	Vane · Louver · Vent. (Lossnay)		**Use to set the vane angle.** • Select a desired vane setting from 5 different settings. **Use to turn ON/OFF the louver.** • Select a desired setting from "ON" and "OFF." **Use to set the amount of ventilation.** • Select a desired setting from "Off," "Low," and "High."
	High power *3		**Use to reach the comfortable room temperature quickly.** • Units can be operated in the High-power mode for up to 30 minutes.
	Comfort	Manual vane angle	**Use to fix each vane angle.**
		3D i-See sensor	**Use to set the following functions for 3D i-See sensor.** • Air distribution • Energy saving option • Seasonal airflow
Timer	Timer	ON/OFF timer *1	**Use to set the operation ON/OFF times.** • Time can be set in 5-minute increments.
		Auto-Off timer	**Use to set the Auto-Off time.** • Time can be set to a value from 30 to 240 in 10-minute increments.
	Weekly timer *1, *2		**Use to set the weekly operation ON/OFF times.** • Up to 8 operation patterns can be set for each day. (Not valid when the ON/OFF timer is enabled.)
	OU silent mode *1, *3		**Use to set the time periods in which priority is given to quiet operation of outdoor units over temperature control. Set the Start/Stop times for each day of the week.** •Select the desired silent level from "Normal," "Middle," and "Quiet."
Energy saving	Restriction	Temp. range *2	**Use to restrict the preset temperature range.** • Different temperature ranges can be set for different operation modes.
		Operation locked	**Use to lock selected functions.** • The locked functions cannot be operated.
	Energy saving	Auto return *2	**Use to get the units to operate at the preset temperature after performing energy saving operation for a specified time period.** • Time can be set to a value from 30 and 120 in 10-minute increments. (This function will not be valid when the preset temperature ranges are restricted.)
		Schedule *1	**Set the start/stop times to operate the units in the energy saving mode for each day of the week, and set the energy saving rate.** • Up to 4 energy saving operation patterns can be set for each day. • Time can be set in 5-minute increments. • Energy saving rate can be set to a value from 0% or 50 to 90% in 10% increments.

*1 Clock setting is required.
*2 2°F (1°C) increments.
*3 This function can only be set when certain outdoor units are connected.

TCH070A.indd 11 7/2/2565 16:46:46

Main menu	Setting and display items		Setting details
Initial setting	Basic setting	Main/Sub	**When connecting 2 remote controllers, one of them needs to be designated as a sub controller.**
		Clock	**Use to set the current time.**
		Daylight saving time	**Set the daylight saving time.**
		Administrator password	**The administrator password is required to make the settings for the following items.** • Timer setting • Energy saving setting • Weekly timer setting • Restriction setting • Outdoor unit silent mode setting
	Display setting	Main display	**Use to switch between "Full" and "Basic" modes for the Main display, and use to change the background colors of the display to black.**
		Display details	**Make the settings for the remote controller related items as necessary.** **Clock:** The initial settings are "Yes" and "24h" format. **Temperature:** Set either Celsius (°C) or Fahrenheit (°F). **Room temp. :** Set Show or Hide. **Auto mode:** Set the Auto mode display or Only Auto display.
		Contrast • Brightness	**Use to adjust screen contrast and brightness.**
		Language selection	**Use to select the desired language.**
	Operation setting	Auto mode	**Whether or not to use the Auto mode can be selected by using the button. This setting is valid only when indoor units with the Auto mode function are connected.**
		Setback mode	**Whether or not to use the Setback mode can be selected by using the button. This setting is valid only when indoor units with the Setback mode function are connected.**
Maintenance	Error information		**Use to check error information when an error occurs.** • Check code, error source, refrigerant address, unit model, manufacturing number, contact information (dealer's phone number) can be displayed. (The unit model, manufacturing number, and contact information need to be registered in advance to be displayed.)
	Filter information		**Use to check the filter status.** • The filter sign can be reset.
	Cleaning	Auto descending panel	**Use to lift and lower the auto descending panel (Optional parts).**
Service	Test run		**Select "Test run" from the Service menu to bring up the Test run menu.** • Test run • Drain pump test run
	Input maintenance		**Select "Input maintenance Info." from the Service menu to bring up the Maintenance information screen.** **The following settings can be made from the Maintenance Information screen.** • Model name input • Serial No. input • Dealer information input • Initialize maintenance info.
	Settings	Function setting	**Make the settings for the indoor unit functions via the remote controller as necessary.**
	Check	Error history	Display the error history and execute "delete error history".
		Diagnosis	**Self check:** Error history of each unit can be checked via the remote controller. **Remote controller check:** When the remote controller does not work properly, use the remote controller checking function to troubleshoot the problem.
	Others	Maintenance password	**Use to change the maintenance password.**
		Initialize remote controller	**Use to initialize the remote controller to the factory shipment status.**
		Remote controller information	**Use to display the remote controller model name, software version, and serial number.**

TCH070A.indd 12 7/2/2565 16:46:46

3-3. IR WIRELESS REMOTE CONTROLLER (Option) PAR-FL32MA

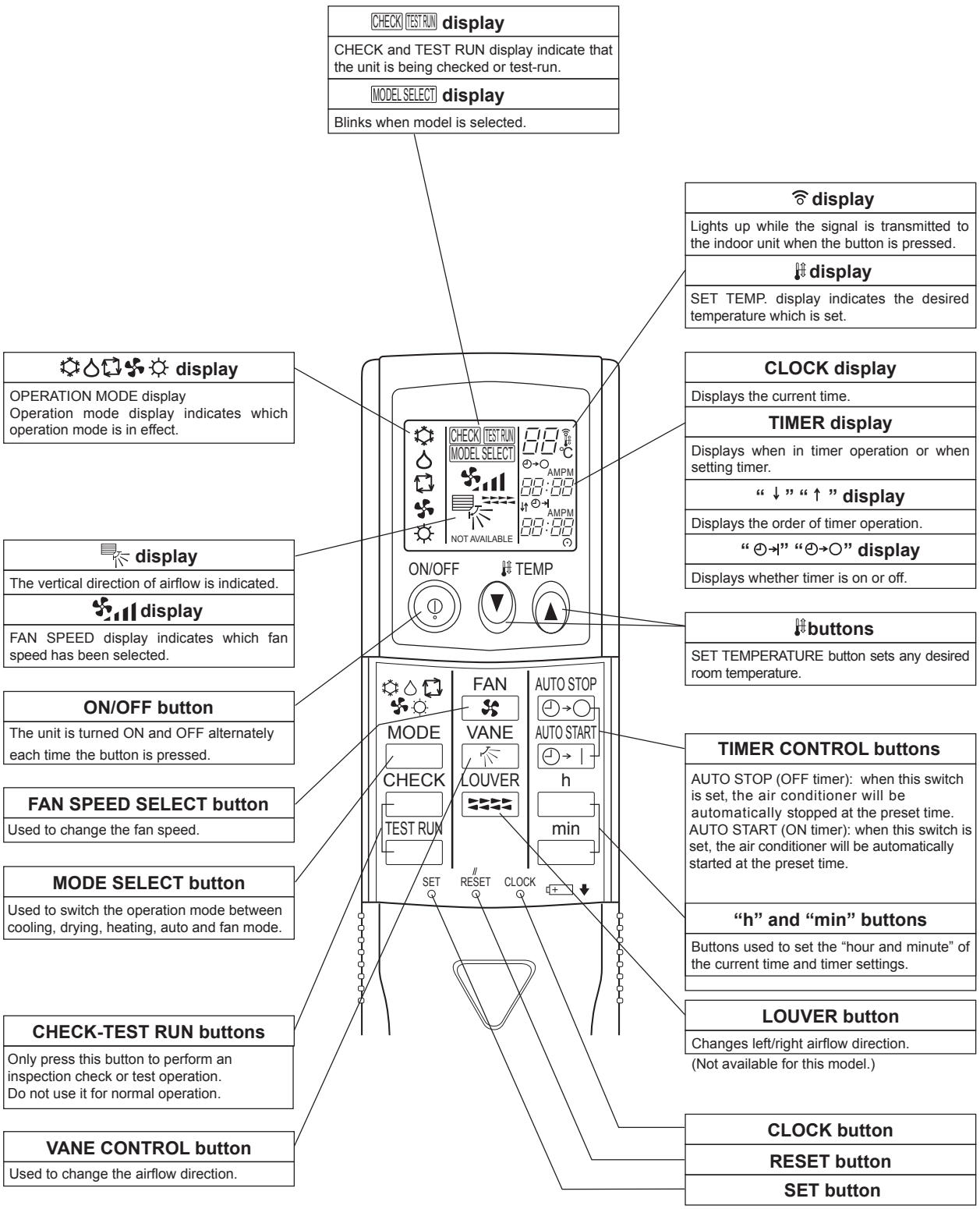

TCH070A.indd 13 7/2/2565 16:46:46

3-4. IR WIRELESS REMOTE CONTROLLER (Option) PAR-SL100A-E

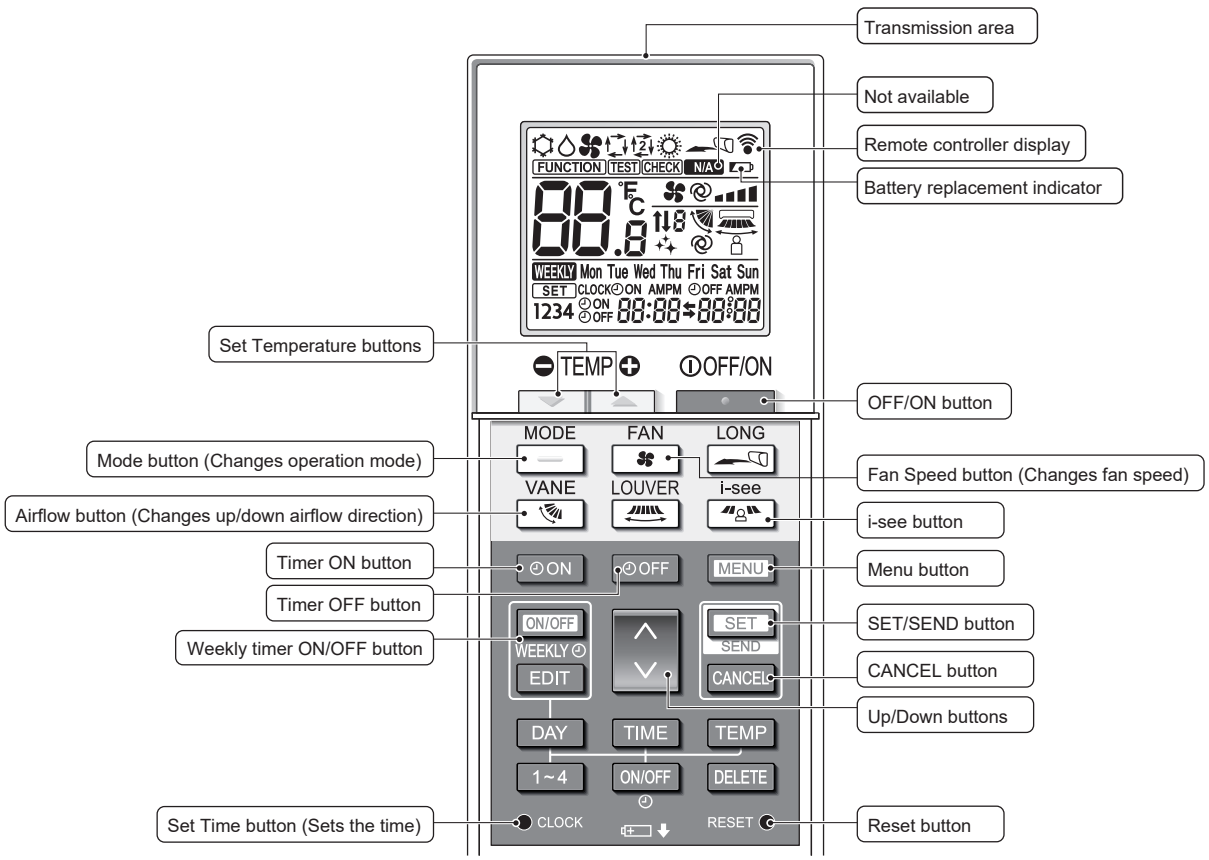

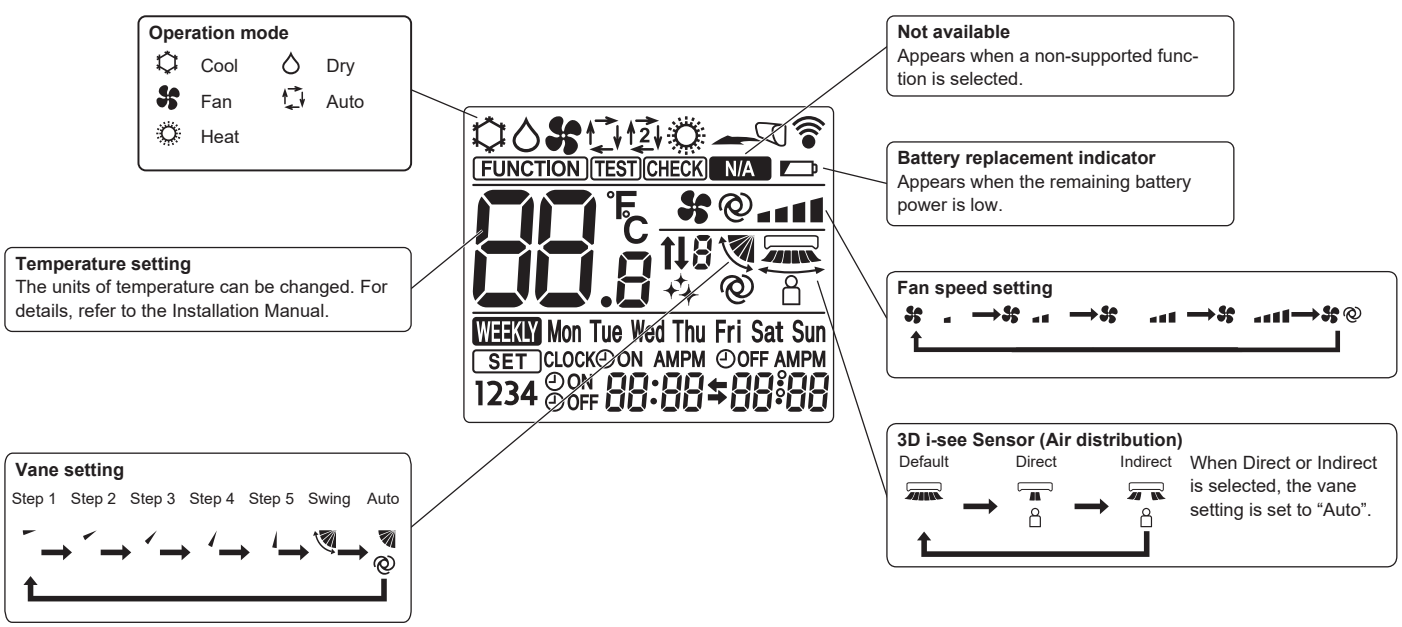

4 SPECIFICATIONS

INDOOR UNIT	**Service Ref.**			**PLA-A12EA7R1.TH**	
	Power supply (phase, cycle, voltage)			Single phase, 60 Hz, 208/230 V	
		Max. Fuse Size	A	15	
		Min Circuit Ampacity	A	1	
	External finish (Panel)			PLP-41EAEU: Munsell 1.0Y 9.2/0.2	
	Heat exchanger			Plate fin coil	
	Fan	Fan (drive) × No.		Turbo fan (direct) × 1	
		Fan motor output	kW	0.05	
		Fan motor	F.L.A.	0.26	
		Airflow (Low-Medium2-Medium1-High)	CFM (m³/min)	420-460-490-530 (12-13-14-15)	
		External static pressure	Pa (mmAq)	0 (direct blow)	
	Booster heater		kW	–	
	Operation control & Thermostat			Remote controller & built-in	
	Noise level (Low-Medium2-Medium1-High)		dB	27-28-29-30	
	Field drain pipe O.D.		inch (mm)	1-1/4 (32)	
	Dimensions	W	inch (mm)	MAIN UNIT: 33-1/16 (840)	PANEL: 37-13/32 (950)
		D	inch (mm)	MAIN UNIT: 33-1/16 (840)	PANEL: 37-13/32 (950)
		H	inch (mm)	MAIN UNIT: 10-3/16 (258)	PANEL: 1-9/16 (40)
	Weight		lb (kg)	MAIN UNIT: 46 (21)	PANEL: 11 (5)

INDOOR UNIT	**Service Ref.**			**PLA-A18EA7R1.TH**	
	Power supply (phase, cycle, voltage)			Single phase, 60 Hz, 208/230 V	
		Max. Fuse Size	A	15	
		Min Circuit Ampacity	A	1	
	External finish (Panel)			PLP-41EAEU: Munsell 1.0Y 9.2/0.2	
	Heat exchanger			Plate fin coil	
	Fan	Fan (drive) × No.		Turbo fan (direct) × 1	
		Fan motor output	kW	0.05	
		Fan motor	F.L.A.	0.34	
		Airflow (Low-Medium2-Medium1-High)	CFM (m³/min)	460-490-570-600 (13-14-16-17)	
		External static pressure	Pa (mmAq)	0 (direct blow)	
	Booster heater		kW	–	
	Operation control & Thermostat			Remote controller & built-in	
	Noise level (Low-Medium2-Medium1-High)		dB	28-29-31-32	
	Field drain pipe O.D.		inch (mm)	1-1/4 (32)	
	Dimensions	W	inch (mm)	MAIN UNIT: 33-1/16 (840)	PANEL: 37-13/32 (950)
		D	inch (mm)	MAIN UNIT: 33-1/16 (840)	PANEL: 37-13/32 (950)
		H	inch (mm)	MAIN UNIT: 10-3/16 (258)	PANEL: 1-9/16 (40)
	Weight		lb (kg)	MAIN UNIT: 46 (21)	PANEL: 11 (5)

INDOOR UNIT	**Service Ref.**			**PLA-A24EA7R1.TH**	
	Power supply (phase, cycle, voltage)			Single phase, 60 Hz, 208/230 V	
		Max. Fuse Size	A	15	
		Min Circuit Ampacity	A	1	
	External finish (Panel)			PLP-41EAEU: Munsell 1.0Y 9.2/0.2	
	Heat exchanger			Plate fin coil	
	Fan	Fan (drive) × No.		Turbo fan (direct) × 1	
		Fan motor output	kW	0.12	
		Fan motor	F.L.A.	0.49	
		Airflow (Low-Medium2-Medium1-High)	CFM (m³/min)	530-640-710-810 (15-18-20-23)	
		External static pressure	Pa (mmAq)	0 (direct blow)	
	Booster heater		kW	–	
	Operation control & Thermostat			Remote controller & built-in	
	Noise level (Low-Medium2-Medium1-High)		dB	28-30-33-36	
	Field drain pipe O.D.		inch (mm)	1-1/4 (32)	
	Dimensions	W	inch (mm)	MAIN UNIT: 33-1/16 (840)	PANEL: 37-13/32 (950)
		D	inch (mm)	MAIN UNIT: 33-1/16 (840)	PANEL: 37-13/32 (950)
		H	inch (mm)	MAIN UNIT: 11-3/4 (298)	PANEL: 1-9/16 (40)
	Weight		lb (kg)	MAIN UNIT: 56 (25)	PANEL: 11 (5)

TCH070A.indd 15 7/2/2565 16:46:46

INDOOR UNIT	**Service Ref.**			**PLA-A30EA7R1.TH**	
	Power supply (phase, cycle, voltage)			Single phase, 60 Hz, 208/230 V	
		Max. Fuse Size	A	15	
		Min Circuit Ampacity	A	1	
	External finish (Panel)			PLP-41EAEU: Munsell 1.0Y 9.2/0.2	
	Heat exchanger			Plate fin coil	
	Fan	Fan (drive) × No.		Turbo fan (direct) × 1	
		Fan motor output	kW	0.12	
		Fan motor	F.L.A.	0.59	
		Airflow (Low-Medium2-Medium1-High)	CFM (m^3/min)	570-670-780-880 (16-19-22-25)	
		External static pressure	Pa (mmAq)	0 (direct blow)	
	Booster heater		kW	–	
	Operation control & Thermostat			Remote controller & built-in	
	Noise level (Low-Medium2-Medium1-High)		dB	28-32-35-38	
	Field drain pipe O.D.		inch (mm)	1-1/4 (32)	
	Dimensions	W	inch (mm)	MAIN UNIT: 33-1/16 (840)	PANEL: 37-13/32 (950)
		D	inch (mm)	MAIN UNIT: 33-1/16 (840)	PANEL: 37-13/32 (950)
		H	inch (mm)	MAIN UNIT: 11-3/4 (298)	PANEL: 1-9/16 (40)
	Weight		lb (kg)	MAIN UNIT: 56 (25)	PANEL: 11 (5)

INDOOR UNIT	**Service Ref.**			**PLA-A36EA7R1.TH**	
	Power supply (phase, cycle, voltage)			Single phase, 60 Hz, 208/230 V	
		Max. Fuse Size	A	15	
		Min Circuit Ampacity	A	2	
	External finish (Panel)			PLP-41EAEU: Munsell 1.0Y 9.2/0.2	
	Heat exchanger			Plate fin coil	
	Fan	Fan (drive) × No.		Turbo fan (direct) × 1	
		Fan motor output	kW	0.12	
		Fan motor	F.L.A.	0.98	
		Airflow (Low-Medium2-Medium1-High)	CFM (m^3/min)	670-850-1020-1200 (19-24-29-34)	
		External static pressure	Pa (mmAq)	0 (direct blow)	
	Booster heater		kW	–	
	Operation control & Thermostat			Remote controller & built-in	
	Noise level (Low-Medium2-Medium1-High)		dB	32-37-41-44	
	Field drain pipe O.D.		inch (mm)	1-1/4 (32)	
	Dimensions	W	inch (mm)	MAIN UNIT: 33-1/16 (840)	PANEL: 37-13/32 (950)
		D	inch (mm)	MAIN UNIT: 33-1/16 (840)	PANEL: 37-13/32 (950)
		H	inch (mm)	MAIN UNIT: 11-3/4 (298)	PANEL: 1-9/16 (40)
	Weight		lb (kg)	MAIN UNIT: 56 (25)	PANEL: 11 (5)

INDOOR UNIT	**Service Ref.**			**PLA-A42EA7R1.TH**	
	Power supply (phase, cycle, voltage)			Single phase, 60 Hz, 208/230 V	
		Max. Fuse Size	A	15	
		Min Circuit Ampacity	A	2	
	External finish (Panel)			PLP-41EAEU: Munsell 1.0Y 9.2/0.2	
	Heat exchanger			Plate fin coil	
	Fan	Fan (drive) × No.		Turbo fan (direct) × 1	
		Fan motor output	kW	0.12	
		Fan motor	F.L.A.	1.05	
		Airflow (Low-Medium2-Medium1-High)	CFM (m^3/min)	740-920-1060-1200 (21-26-30-34)	
		External static pressure	Pa (mmAq)	0 (direct blow)	
	Booster heater		kW	–	
	Operation control & Thermostat			Remote controller & built-in	
	Noise level (Low-Medium2-Medium1-High)		dB	34-38-42-45	
	Field drain pipe O.D.		inch (mm)	1-1/4 (32)	
	Dimensions	W	inch (mm)	MAIN UNIT: 33-1/16 (840)	PANEL: 37-13/32 (950)
		D	inch (mm)	MAIN UNIT: 33-1/16 (840)	PANEL: 37-13/32 (950)
		H	inch (mm)	MAIN UNIT: 11-3/4 (298)	PANEL: 1-9/16 (40)
	Weight		lb (kg)	MAIN UNIT: 56 (25)	PANEL: 11 (5)

TCH070A.indd 16 7/2/2565 16:46:47

5 NOISE CRITERION CURVES

PLA-A12EA7R1.TH

NOTCH	SPL(dB)	LINE
High	30	
Medium1	29	
Medium2	28	
Low	27	

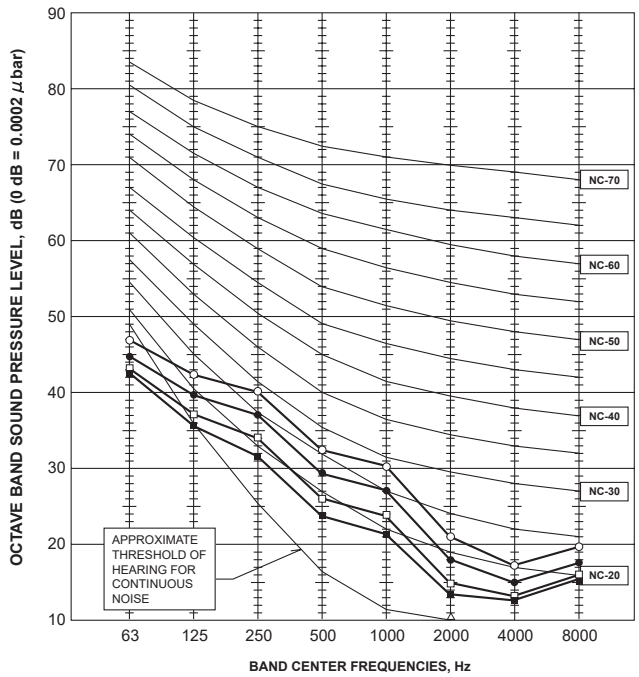

PLA-A18EA7R1.TH

NOTCH	SPL(dB)	LINE
High	32	
Medium1	31	
Medium2	29	
Low	28	

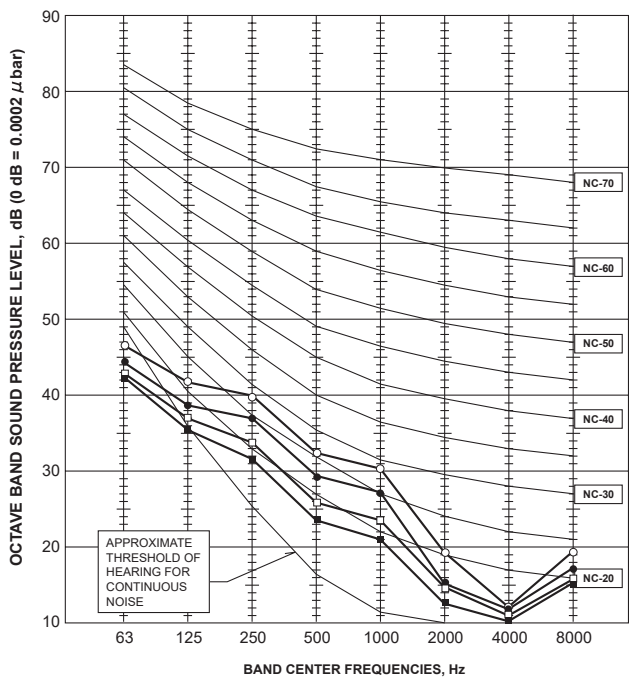

PLA-A24EA7R1.TH

NOTCH	SPL(dB)	LINE
High	36	
Medium1	33	
Medium2	30	
Low	28	

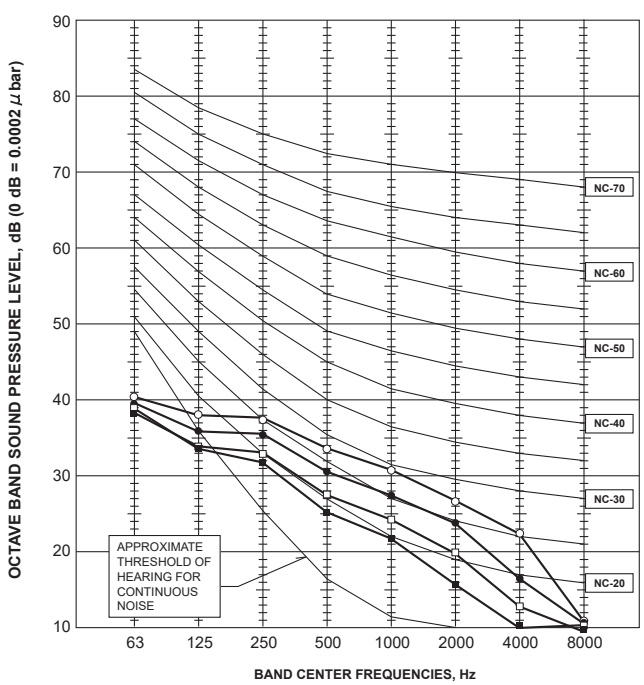

PLA-A30EA7R1.TH

NOTCH	SPL(dB)	LINE
High	38	
Medium1	35	
Medium2	32	
Low	28	

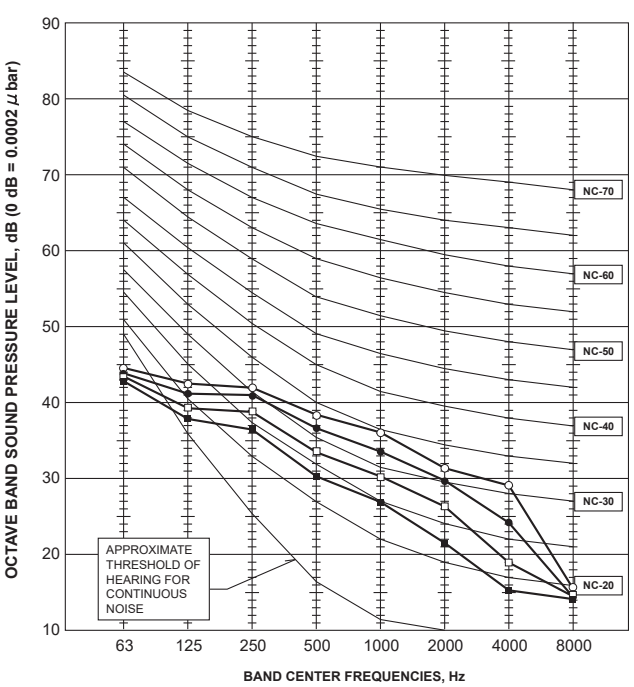

TCH070A.indd 17 7/2/2565 16:46:47

PLA-A36EA7R1.TH

NOTCH	SPL(dB)	LINE
High	44	
Medium1	41	
Medium2	37	
Low	32	

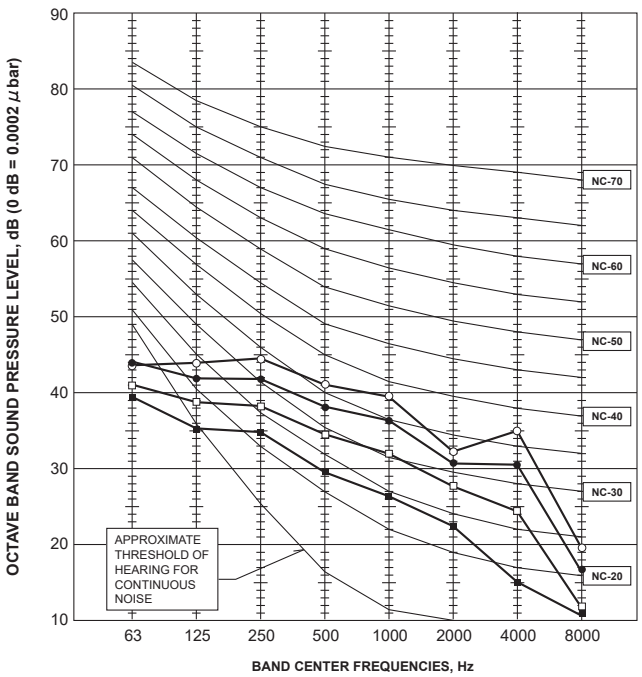

PLA-A42EA7R1.TH

NOTCH	SPL(dB)	LINE
High	45	
Medium1	42	
Medium2	38	
Low	34	

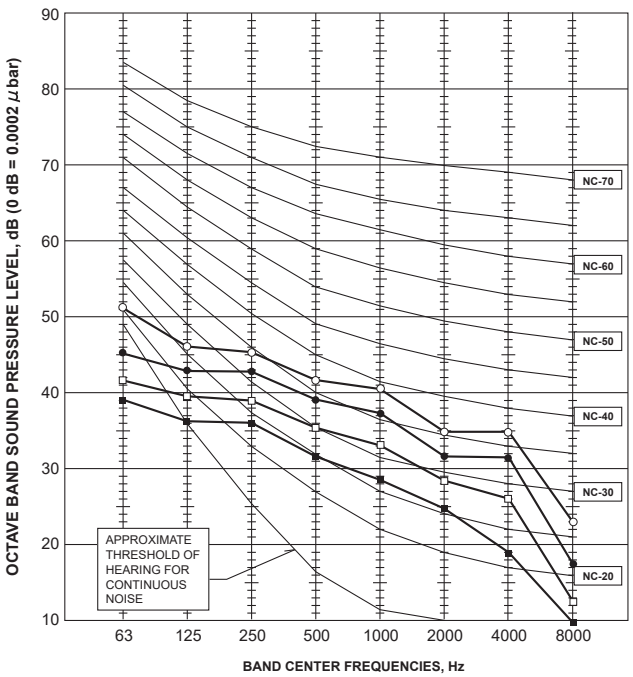

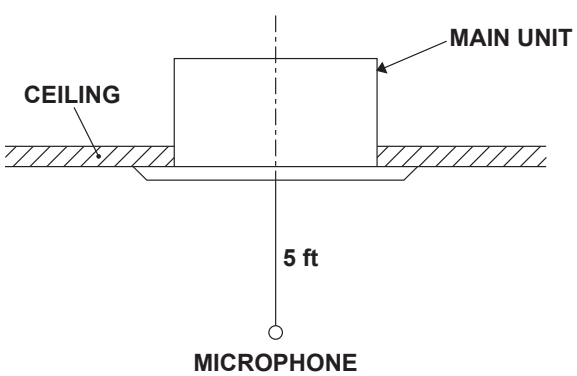

TCH070A.indd 18 7/2/2565 16:46:47

6 OUTLINES AND DIMENSIONS

PLA-A12EA7R1.TH PLA-A18EA7R1.TH PLA-A24EA7R1.TH
PLA-A30EA7R1.TH PLA-A36EA7R1.TH PLA-A42EA7R1.TH

Unit: inch (mm)

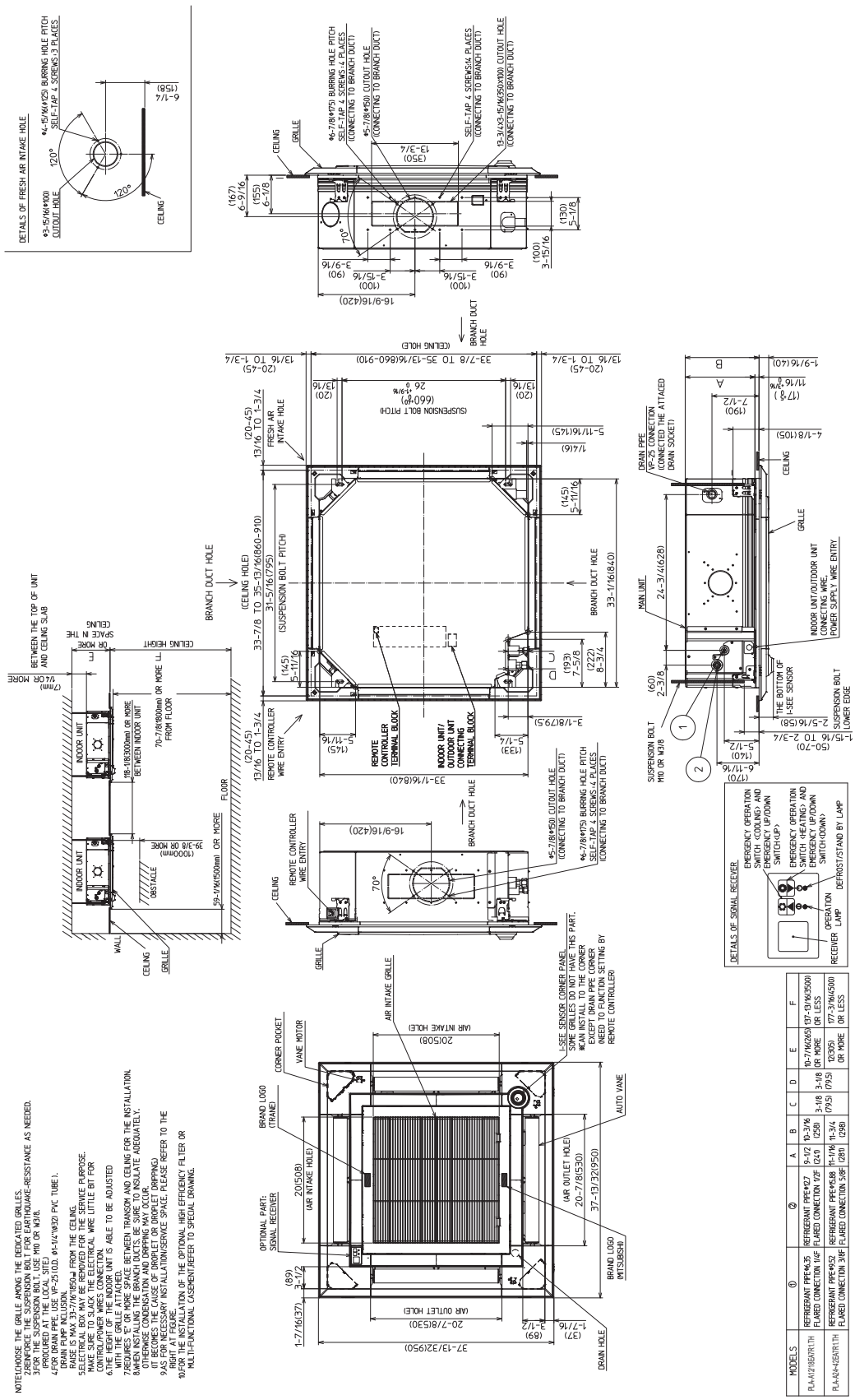

7 WIRING DIAGRAM

PLA-A12EA7R1.TH PLA-A18EA7R1.TH PLA-A24EA7R1.TH
PLA-A30EA7R1.TH PLA-A36EA7R1.TH PLA-A42EA7R1.TH

[LEGEND]

SYMBOL	NAME
I.B	INDOOR CONTROLLER BOARD
CN2L	CONNECTOR (LOSSNAY)
CN32	CONNECTOR (REMOTE SWITCH)
CN41	CONNECTOR (HA TERMINAL-A)
CN51	CONNECTOR (CENTRALLY CONTROL)
CN105	CONNECTOR (IT TERMINAL)
F1	FUSE (T6.3AL250V)
LED1	POWER SUPPLY (I.B)
LED2	POWER SUPPLY (R.B)
LED3	TRANSMISSION (INDOOR-OUTDOOR)
SW1	SWITCH (MODEL SELECTION) Refer to <Table 1>
SW2	SWITCH (CAPACITY CODE) Refer to <Table 2>
SWE	CONNECTOR (EMERGENCY OPERATION)
DP	DRAIN PUMP
FS	DRAIN FLOAT SWITCH
MF	FAN MOTOR
MV	VANE MOTOR

SYMBOL	NAME
TB4	TERMINAL BLOCK (INDOOR/OUTDOOR CONNECTING LINE)
TB5, TB6	TERMINAL BLOCK (REMOTE CONTROLLER TRANSMISSION LINE)
TH1	ROOM TEMP. THERMISTOR (32°F / 15kΩ, 77°F / 5.4kΩ DETECT)
TH2	PIPE TEMP. THERMISTOR/LIQUID (32°F / 15kΩ, 77°F / 5.4kΩ DETECT)
TH5	COND./EVA. TEMP. THERMISTOR (32°F / 15kΩ, 77°F / 5.4kΩ DETECT)
R.B	WIRED REMOTE CONTROLLER
OPTION PART	
W.B	PCB OF SIGNAL RECEIVER
BZ	BUZZER
LED1	LED (OPERATION INDICATION : GREEN)
LED2	LED (PREPARATION FOR HEATING : ORANGE) [HEAT PUMP ONLY]
RU	RECEIVING UNIT
SW1	EMERGENCY OPERATION (FAN/DOWN)
SW2	EMERGENCY OPERATION (COOL/UP)
MT	I-SEE SENSOR MOTOR
TB2	TERMINAL BLOCK (INDOOR UNIT POWER AND TRANSMISSION LINE)

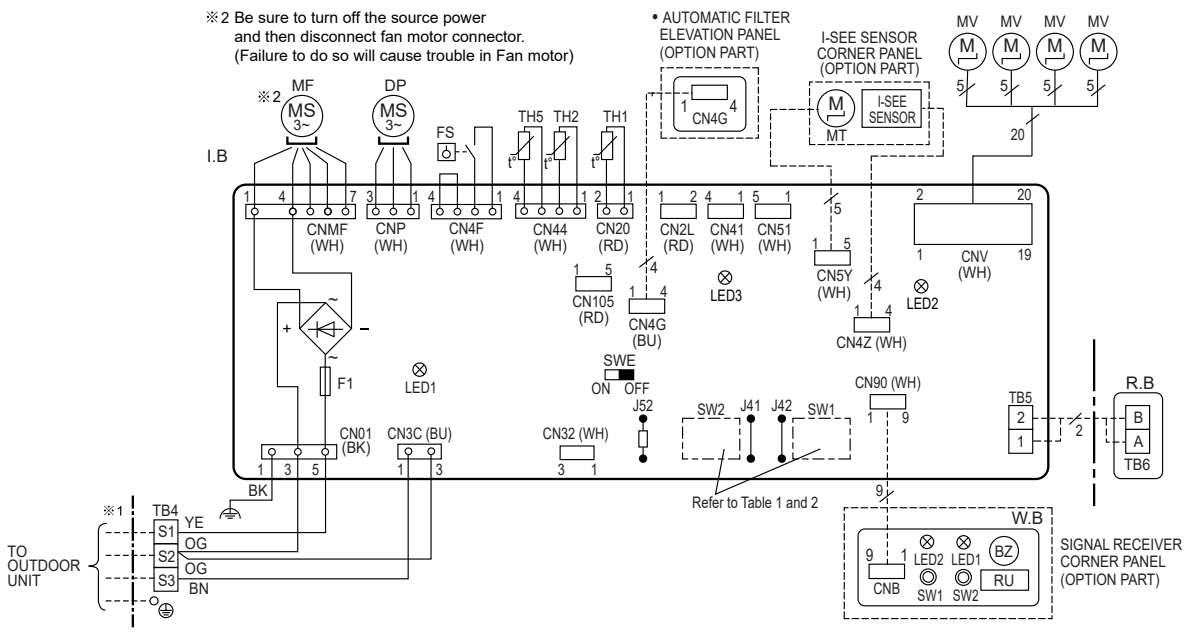

<Fig. 1> **Caution when connecting the remote controller cable to the terminal block TB5**

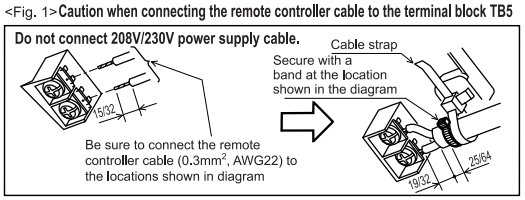

<Fig. 2>

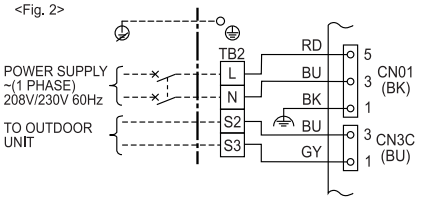

<Table 1> SW1 (MODEL SELECTION)

MODELS	Manufacture/Service
PLA-A.EA7	1 2 3 4 5 6 ON OFF

<Table 2> SW2 (CAPACITY CODE)

CAPACITY	Manufacture/Service	CAPACITY	Manufacture/Service
12	1 2 3 4 5 ON OFF	30	1 2 3 4 5 ON OFF
18	1 2 3 4 5 ON OFF	36	1 2 3 4 5 ON OFF
24	1 2 3 4 5 ON OFF	42	1 2 3 4 5 ON OFF

The black square (■) indicates a switch position.

Notes:
1. Symbols used in wiring diagram above are, □□□:Terminal (block), ○○○:Connector.
2. Indoor and outdoor connecting wires are made with polarities, make wiring matching terminal numbers (S1, S2, S3).
3. Since the outdoor side electric wiring may change be sure to check the outdoor unit electric wiring for servicing.
4. This diagram shows the wiring of indoor and outdoor connecting wires (specification of 208V/230V), adopting superimposed system of power and signal.
   - If the separate indoor/outdoor unit power supplied system is applied, refer to Fig 2.
   - For power supply system of this unit, refer to the caution label located near this diagram.

※1. Use copper supply wires.
Utilisez des fils d'alimentation en cuivre.

TCH070A.indd 20 7/2/2565 16:46:48

8 REFRIGERANT SYSTEM DIAGRAM

PLA-A12EA7R1.TH PLA-A18EA7R1.TH PLA-A24EA7R1.TH
PLA-A30EA7R1.TH PLA-A36EA7R1.TH PLA-A42EA7R1.TH

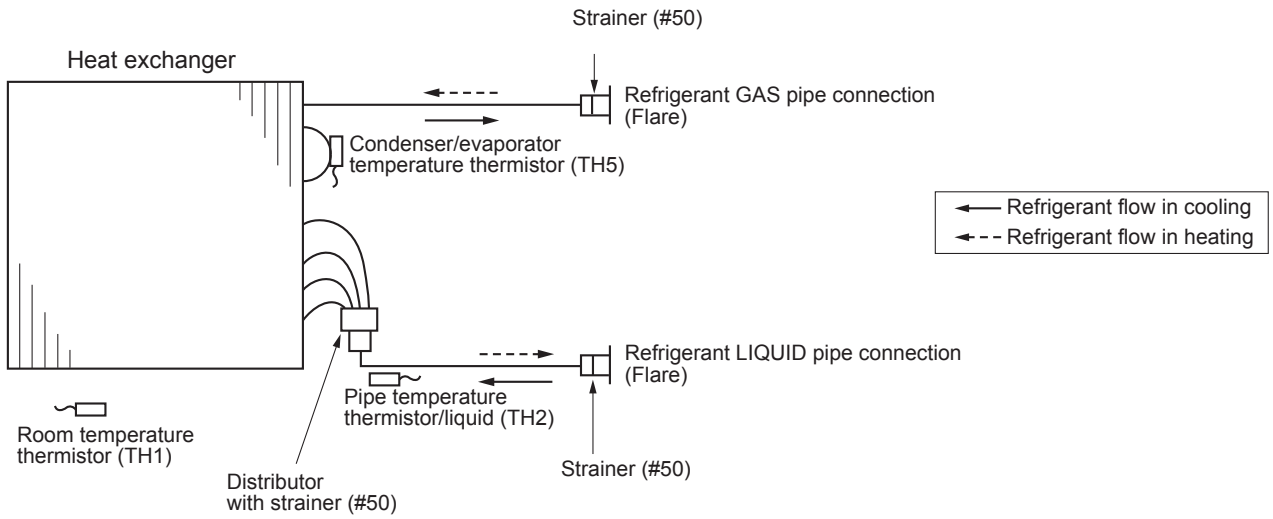

TCH070A.indd 21 7/2/2565 16:46:48

9 TROUBLESHOOTING

9-1. TROUBLESHOOTING

<Check code displayed by self-diagnosis and actions to be taken for service (summary)>

Present and past check codes are logged, and they can be displayed on the wired remote controller and control board of outdoor unit. Actions to be taken for service, which depends on whether or not the trouble is reoccurring in the field, are summarized in the table below. Check the contents below before investigating details.

Unit conditions at service	Check code	Actions to be taken for service (summary)
The trouble is reoccurring.	Displayed	Judge what is wrong and take a corrective action according to “9-3. SELF-DIAGNOSIS ACTION TABLE”.
	Not displayed	Conduct troubleshooting and ascertain the cause of the trouble according to “9-4. TROUBLESHOOTING BY INFERIOR PHENOMENA”.
The trouble is not reoccurring.	Logged	①Consider the temporary defects such as the work of protection devices in the refrigerant circuit including compressor, poor connection of wiring, noise, etc. Re-check the symptom, and check the installation environment, refrigerant amount, weather when the trouble occurred, matters related to wiring, etc. ②Reset check code logs and restart the unit after finishing service. ③There is no abnormality in electrical component, controller board, remote controller, etc.
	Not logged	①Re-check the abnormal symptom. ②Conduct troubleshooting and ascertain the cause of the trouble according to “9-4. TROUBLESHOOTING BY INFERIOR PHENOMENA”. ③Continue to operate unit for the time being if the cause is not ascertained. ④There is no abnormality concerning of parts such as electrical component, controller board, remote controller, etc.

TCH070A.indd 22 7/2/2565 16:46:49

9-2. MALFUNCTION-DIAGNOSIS METHOD BY REMOTE CONTROLLER

<In case of trouble during operation>

When a malfunction occurs to air conditioner, both indoor unit and outdoor unit will stop and operation lamp blinks to inform unusual stop.

<Malfunction-diagnosis method at maintenance service>

■IR wireless remote controller PAR-FL32MA

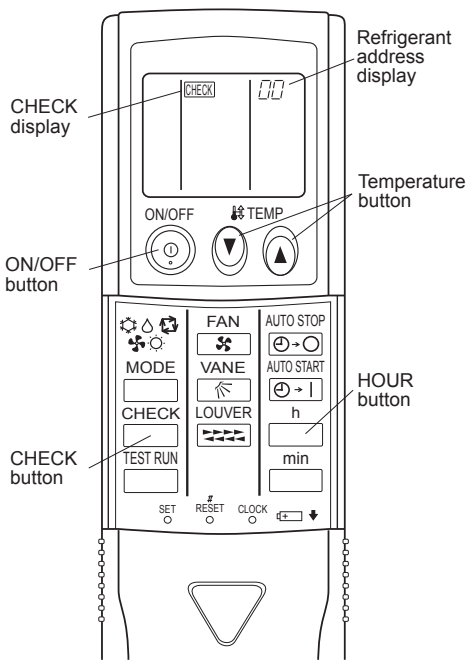

[Procedure]

1. Press the CHECK button twice.
   - "CHECK" lights, and refrigerant address "00" blinks.
   - Check that the remote controller's display has stopped before continuing.

2. Press the TEMP ▼ ▲ buttons.
   - Select the refrigerant address of the indoor unit for the self-diagnosis.

   Note: Set refrigerant address using the outdoor unit's DIP switch (SW1).
   (For more information, see the outdoor unit installation manual.)

3. Point the remote controller at the sensor on the indoor unit and press the HOUR button.
   - If an air conditioner error occurs, the indoor unit's sensor emits an intermittent buzzer sound, the operation lamp blinks, and the check code is output. (It takes 3 seconds at most for check code to appear.)

4. Point the remote controller at the sensor on the indoor unit and press the ON/OFF button.
   - The check mode is cancelled.

■IR wireless remote controller PAR-SL100A-E

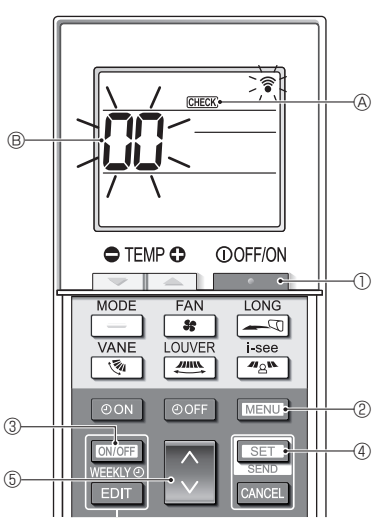

[Procedure]

1. Press the button ① to stop the air conditioner.
   - If the weekly timer is enabled (WEEKLY is on), press the ON/OFF WEEKLY button ③ to disable it (WEEKLY is off).
2. Press the MENU button ② for 5 seconds.
   - CHECK Ⓐ comes on and the unit enters the self-check mode.
3. Press the button ⑤ to select the refrigerant address (M-NET address) Ⓑ of the indoor unit for which you want to perform the self-check.
4. Press the SET button ④.
   - If an error is detected, the check code is indicated by the number of beeps from the indoor unit and the number of blinks of the OPERATION INDICATOR lamp.
5. Press the button ①.
   - CHECK Ⓐ and the refrigerant address (M-NET address) Ⓑ go off and the self-check is completed.

Continue to the next page

TCH070A.indd 23 7/2/2565 16:46:49

• Refer to the following tables for details on the check codes.

[Output pattern A]

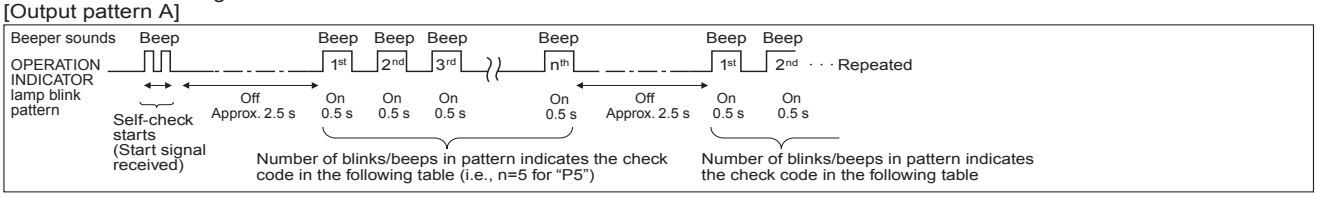

[Output pattern B]

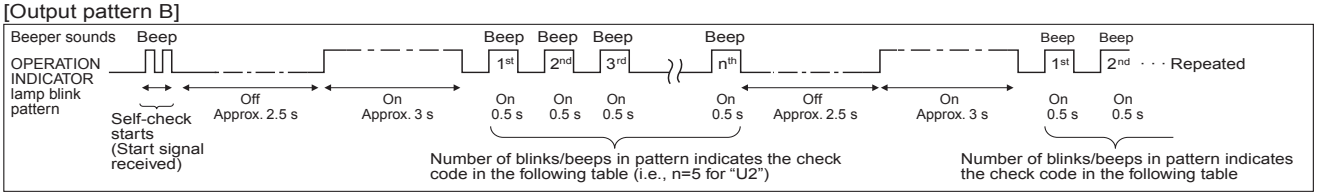

[Output pattern A] Errors detected by indoor unit

IR wireless remote controller Beeper sounds/OPERATION INDICATOR lamp blinks (Number of times)	Wired remote controller ① Check code	Symptom	Remark
1	P1	Intake sensor error	———
2	P2	Pipe (TH2) sensor error	
	P9	Pipe (TH5) sensor error	
3	E6,E7	Indoor/outdoor unit communication error	
4	P4	Float switch connector open	
5	P5	Drain pump error	
	PA	Forced compressor stop(due to water leakage abnormality)	
6	P6	Freezing/Overheating protection operation	
7	EE	Combination error between indoor and outdoor units	
8	P8	Pipe temperature error	
9	E4, E5	Remote controller signal receiving error	
10	–	–	
11	PB(Pb)	Indoor unit fan motor error	
12	FB(Fb)	Indoor unit control system error (memory error, etc.)	
14	PL	Abnormality of refrigerant circuit	
–	E0, E3	Remote controller transmission error	
–	E1, E2	Remote controller control board error	

[Output pattern B] Errors detected by unit other than indoor unit (outdoor unit, etc.)

IR wireless remote controller Beeper sounds/OPERATION INDICATOR lamp blinks (Number of times)	Wired remote controller ① Check code	Symptom	Remark
1	E9	Indoor/outdoor unit communication error (Transmitting error) (Outdoor unit)	For details, check the LED display of the outdoor controller board. As for outdoor unit, refer to outdoor unit's service manual.
2	UP	Compressor overcurrent interruption	
3	U3,U4	Open/short of outdoor unit thermistors	
4	UF	Compressor overcurrent interruption (When compressor locked)	
5	U2	Abnormal high discharging temperature/49C operated/ insufficient refrigerant	
6	U1,Ud	Abnormal high pressure (63H operated)/Overheating protection operation	
7	U5	Abnormal temperature of heatsink	
8	U8	Outdoor unit fan protection stop	
9	U6	Compressor overcurrent interruption/Abnormal of power module	
10	U7	Abnormality of superheat due to low discharge temperature	
11	U9,UH	Abnormality such as overvoltage or voltage shortage and abnormal synchronous signal to main circuit/Current sensor error	
12	–	–	
13	–	–	
14	Others	Other errors (Refer to the technical manual for the outdoor unit.)	

Notes:

1. If the beeper does not sound again after the initial 2 beeps to confirm the self-check start signal was received and the OPERATION INDICATOR lamp does not come on, there are no error records.
2. If the beeper sounds 3 times continuously "beep, beep, beep (0.4 + 0.4 + 0.4 seconds)" after the initial 2 beeps to confirm the self-check start signal was received, the specified refrigerant address is incorrect.

TCH070A.indd 24 7/2/2565 16:46:49

• On IR wireless remote controller
The continuous buzzer sounds from receiving section of indoor unit.
Blink of operation lamp
• On wired remote controller
① Check code displayed in the LCD. (Refer to the previous page, ① check code.)

• If the unit cannot be operated properly after the test run, refer to the following table to find out the cause.

Symptom			Cause
Wired remote controller		LED 1, 2 (PCB in outdoor unit)	
PLEASE WAIT	For about 3 minutes after power-on	After LED 1, 2 are lit, LED 2 is turned off, then only LED 1 is lit. (Correct operation)	•For about 3 minutes following power-on, operation of the remote controller is not possible due to system startup. (Correct operation)
PLEASE WAIT→ Check code	Subsequent to about 3 minutes after power-on	Only LED 1 is lit. → LED 1, 2 blink.	•Connector for the outdoor unit's protection device is not connected. •Reverse or open phase wiring for the outdoor unit's power terminal block (L1, L2, GR)
Display messages do not appear even when operation switch is turned ON (operation lamp does not light up).		Only LED 1 is lit. → LED 1 blinks twice, LED 2 blinks once.	•Incorrect wiring between indoor and outdoor units (incorrect polarity of S1, S2, S3) •Remote controller wire short

On the IR wireless remote controller with condition above, following phenomena take place.
• No signals from the remote controller can be received.
• Operation lamp is blinking.
• The buzzer makes a short ping sound.

Note:
Operation is not possible for about 30 seconds after cancellation of function selection. (Correct operation)

For description of each LED (LED1, 2, 3) provided on the indoor controller, refer to the following table.

LED1 (power for microprocessor)	Indicates whether control power is supplied. Make sure that this LED is always lit.
LED2 (power for wired remote controller)	Indicates whether power is supplied to the wired remote controller. This LED lights only in the case of the indoor unit which is connected to the outdoor unit refrigerant addresses "0".
LED3 (communication between indoor and outdoor units)	Indicates state of communication between the indoor and outdoor units. Make sure that this LED is always blinking.

TCH070A.indd 25 7/2/2565 16:46:49

9-3. SELF-DIAGNOSIS ACTION TABLE

Note:
Errors to be detected in outdoor unit, such as codes starting with F, U or E (excluding E0 to E7), are not covered in this document. Please refer to the outdoor unit service manual for the details.

Check code	Abnormal point and detection method	Cause	Countermeasure
P1	**Room temperature thermistor (TH1)** ① The unit is in 3-minute resume prevention mode if short/open of thermistor is detected. Abnormal if the unit does not reset normally after 3 minutes. (The unit returns to normal operation, if it has been reset normally.) ② Constantly detected during cooling, drying, and heating operation. Short: 194°F [90℃] or more Open: −40°F [−40℃] or less	① Defective thermistor characteristics ② Contact failure of connector (CN20) on the indoor controller board (Insert failure) ③ Breaking of wire or contact failure of thermistor wiring ④ Defective indoor controller board	①–③ Check resistance value of thermistor. 32°F [0℃]....15.0 kΩ 50°F [10℃].....9.6 kΩ 68°F [20℃].....6.3 kΩ 86°F [30℃].....4.3 kΩ 104°F [40℃].....3.0 kΩ If you put force on (draw or bend) the lead wire with measuring resistance value of thermistor, breaking of wire or contact failure can be detected. ② Check contact failure of connector (CN20) on the indoor controller board. Refer to "9-7. TEST POINT DIAGRAM". Turn the power on again and check restart after inserting connector again. ④ Check room temperature display on remote controller. Replace indoor controller board if there is abnormal difference with actual room temperature. Turn the power off, and on again to operate after check.
P2	**Pipe temperature thermistor/liquid (TH2)** ① The unit is in 3-minute resume prevention mode if short/open of thermistor is detected. Abnormal if the unit does not reset normally after 3 minutes. (The unit returns to normal operation, if it has been reset normally.) ② Constantly detected during cooling, drying, and heating (except defrosting) operation Short: 194°F [90℃] or more Open: −40°F [−40℃] or less Note: When all of the following conditions have been satisfied, the error is not detected: 1) During cooling operation, or for 3 minutes after cooling operation is stopped. 2) Up to 16 minutes from 10 seconds after cooling operation is started. 3) Outside temperature < −22°F [−30℃]	① Defective thermistor characteristics ② Contact failure of connector (CN44) on the indoor controller board (Insert failure) ③ Breaking of wire or contact failure of thermistor wiring ④ Defective refrigerant circuit is causing thermistor temperature of 194°F [90℃] or more, or −40°F [−40℃] or less. ⑤ Defective indoor controller board	①–③ Check resistance value of thermistor. For characteristics, refer to (P1) above. ② Check contact failure of connector (CN44) on the indoor controller board. Refer to "9-7. TEST POINT DIAGRAM". Turn the power on and check restart after inserting connector again. ④ Check pipe <liquid> temperature with remote controller in test run mode. If pipe <liquid> temperature is extremely low (in cooling mode) or high (in heating mode), refrigerant circuit may have defective. ⑤ Check pipe <liquid> temperature with remote controller in test run mode. If there is extremely difference with actual pipe <liquid> temperature, replace indoor controller board. Turn the power off, and on again to operate after check.
P4	**Contact failure of drain float switch (CN4F)** • Extract when the connector of drain float switch is disconnected. (③ and ④ of connector CN4F is not short-circuited.) • Constantly detected during operation	① Contact failure of connector (Insert failure) ② Defective indoor controller board	① Check contact failure of float switch connector. Turn the power on again and check after inserting connector again. ② Operate with connector (CN4F) short-circuited. Replace indoor controller board if abnormality reappears.

TCH070A.indd 26 7/2/2565 16:46:49

Check code	Abnormal point and detection method	Cause	Countermeasure
P5	**Drain overflow protection operation** ① Suspensive abnormality, if drain float switch is detected to be underwater for 1 minute and 30 seconds continuously with drain pump on. Compressor and indoor fan will be turned off. ② Drain pump is abnormal if the condition above is detected during suspensive abnormality. ③ Constantly detected during drain pump operation	① Malfunction of drain pump ② Defective drain Clogged drain pump Clogged drain pipe ③ Defective drain float switch Catch of drain float switch or malfunction of moving parts cause drain float switch to be detected under water (Switch On) ④ Defective indoor-controller board	① Check if drain-up machine works. ② Check drain function. ③ Remove drain float switch connector CN4F and check if it is short (Switch On) with the moving part of float switch UP, or OPEN with the moving part of float switch down. Replace float switch if it is short with the moving part of float switch down. ④ Replace indoor controller board if it is short-circuited between ③–④ of the drain float switch connector CN4F and abnormality reappears. It is not abnormal if there is no problem about the above-mentioned ①–④. Turn the power off, and on again to operate after check.
	Drain pump lock protection operation ① Error postponement, if drain pump stops for 5 seconds continuously while drain pump is operating. ② Drain pump is abnormal if above condition is repeated 4 times after error postponement is detected.	① Malfunction of drain pump ② Clogged drain pump ③ Contact failure of connector ④ Defective indoor controller board	① Check if drain pump works. ② Check if drain pump works. ③ Check contact failure of connector CNP ④ Press the indoor emergency switch (SWE) to check the voltage between CNP①-③. • If 13 V DC, replace the drain pump. • If not 13 V DC, replace the indoor controller board.
P6	**Freezing/overheating protection is working** ① Freezing protection (Cooling mode) • In case when outside temperature > −4°F [−20℃] The unit is in 6-minute resume prevention mode if pipe <liquid or condenser/evaporator> temperature stays under −5°F [−15℃] for 3 minutes, 3 minutes after the compressor started. Abnormal if it stays under −5°F [−15℃] for 3 minutes again within 16 minutes after 6-minute resume prevention mode. • In case when outside temperature ≦ −4°F [−20℃] The unit is in 6-minute resume prevention mode if pipe <liquid or condenser/evaporator> temperature stays under −31°F [−35℃] for 3 minutes, 3 minutes after the compressor started. Abnormal if it stays under −31°F [−35℃] for 3 minutes again within 16 minutes after 6-minute resume prevention mode. ② Overheating protection (Heating mode) The unit is in 6-minute resume prevention mode if pipe <liquid or condenser/evaporator> temperature is detected as over 158°F [70℃] after the compressor started. Abnormal if the temperature of over 158°F [70℃] is detected again within 30 minutes after 6-minute resume prevention mode.	(Cooling or drying mode) ① Clogged filter (reduced airflow) ② Short cycle of air path ③ Low-load (low temperature) operation out of the tolerance range ④ Defective indoor fan motor • Fan motor is defective. • Indoor controller board is defective. ⑤ Defective outdoor fan control ⑥ Overcharge of refrigerant ⑦ Defective refrigerant circuit (clogs) (Heating mode) ① Clogged filter (reduced airflow) ② Short cycle of air path ③ Overload (high temperature) operation out of the tolerance range ④ Defective indoor fan motor • Fan motor is defective. • Indoor controller board is defective. ⑤ Defective outdoor fan control ⑥ Overcharge of refrigerant ⑦ Defective refrigerant circuit (clogs) ⑧ Bypass circuit of outdoor unit is defective.	(Cooling or drying mode) ① Check clogs of the filter. ② Remove shields. ④ Refer to "9-6. HOW TO CHECK THE PARTS". ⑤ Check outdoor fan motor. ⑥⑦ Check operating condition of refrigerant circuit. (Heating mode) ① Check clogs of the filter. ② Remove shields. ④ Refer to "9-6. HOW TO CHECK THE PARTS". ⑤ Check outdoor fan motor. ⑥–⑧Check operating condition of refrigerant circuit.

TCH070A.indd 27 7/2/2565 16:46:49

Check code	Abnormal point and detection method	Cause	Countermeasure
P8	**Pipe temperature** <Cooling mode> Detected as abnormal when the pipe temperature is not in the cooling range 3 minutes after compressor start and 6 minutes after the liquid or condenser/evaporator pipe is out of cooling range. Note 1: It takes at least 9 minutes to detect. Note 2: Abnormality P8 is not detected in drying mode. Cooling range: −5.4°F [−3°C] ≧ (TH−TH1) TH: Lower temperature between liquid pipe temperature (TH2) and condenser/evaporator temperature (TH5) TH1: Intake temperature <Heating mode> When 10 seconds have passed after the compressor starts operation and the hot adjustment mode has finished, the unit is detected as abnormal when condenser/evaporator pipe temperature is not in heating range within 20 minutes. Note 3: It takes at least 27 minutes to detect abnormality. Note 4: It excludes the period of defrosting. (Detection restarts when defrosting mode is over.) Heating range: 5.4°F [3°C] ≦ (TH5−TH1)	① Slight temperature difference between indoor room temperature and pipe <liquid or condenser/evaporator> temperature thermistor • Shortage of refrigerant • Disconnected holder of pipe <liquid or condenser/evaporator> thermistor • Defective refrigerant circuit ② Converse connection of extension pipe (on plural units connection) ③ Converse wiring of indoor/outdoor unit connecting wire (on plural units connection) ④ Defective detection of indoor room temperature and pipe <condenser/evaporator> temperature thermistor ⑤ Stop valve is not opened completely.	①–④ Check pipe <liquid or condenser/evaporator> temperature with room temperature display on remote controller and outdoor controller circuit board. Pipe <liquid or condenser/evaporator> temperature display is indicated by setting SW2 of outdoor controller circuit board as follows. (Conduct temperature check with outdoor controller circuit board after connecting 'A-Control Service Tool(PAC-SK52ST)'.) ②③Check converse connection of extension pipe or converse wiring of indoor/outdoor unit connecting wire.
P9	**Condenser/evaporator temperature thermistor (TH5)** ① The unit is in 3-minute resume protection mode if short/open of thermistor is detected. Abnormal if the unit does not get back to normal within 3 minutes. (The unit returns to normal operation, if it has been reset normally.) ② Constantly detected during cooling, drying, and heating operation (except defrosting) Short: 194°F [90℃] or more Open: −40°F [−40℃] or less Note: When all of the following conditions have been satisfied, the error is not detected: 1) During cooling operation, or for 3 minutes after cooling operation is stopped. 2) Up to 16 minutes from 10 seconds after cooling operation is started. 3) Outside temperature < −22°F [−30℃]	① Defective thermistor characteristics ② Contact failure of connector (CN44) on the indoor controller board (Insert failure) ③ Breaking of wire or contact failure of thermistor wiring ④ Temperature of thermistor is 194°F [90℃] or more or −40°F [−40℃] or less caused by defective refrigerant circuit. ⑤ Defective indoor controller board	①–③ Check resistance value of thermistor. For characteristics, refer to (P1). ② Check contact failure of connector (CN44) on the indoor controller board. Refer to "9-7. TEST POINT DIAGRAM". Turn the power on and check restart after inserting connector again. ④ Operate in test run mode and check pipe <condenser/evaporator> temperature with outdoor controller circuit board. If pipe <condenser/evaporator> temperature is extremely low (in cooling mode) or high (in heating mode), refrigerant circuit may have defect. ⑤ Operate in test run mode and check pipe <condenser/evaporator> temperature with outdoor control circuit board. If there is extreme difference with actual pipe <condenser/evaporator> temperature, replace indoor controller board. There is no abnormality if none of above comes within the unit. (Turn the power off and on again to operate. In case of checking pipe temperature with outdoor controller circuit board, be sure to connect A-control service tool (PAC-SK52ST).)

TCH070A.indd 28 7/2/2565 16:46:49

Check code	Abnormal point and detection method	Cause	Countermeasure
PA	**Forced compressor stop (due to water leakage abnormality)** ① The unit has a water leakage abnormality when the following conditions, a) and b), are satisfied while the above-mentioned detection is performed. a) The intake temperature subtracted with liquid pipe temperature detects to be less than 14°F [−10°C] for a total of 30 minutes. (When the drain sensor is detected to be NOT soaked in the water, the detection record of a) and b) will be cleared.) b) Drain float switch detects to be in the water for more than 15 minutes. Note: Once the water leakage abnormality is detected, abnormality state will not be released until the main power is reset.	① Drain pump trouble ② Drain defective • Drain pump clogging • Drain pipe clogging ③ Open circuit of float switch ④ Contact failure of float switch connector ⑤ Dew condensation on float switch • Drain water trickles down lead wire. • Drain water ripples due to filter clogging. ⑥ Extension piping connection difference at twin, triple or quadruple system ⑦ Miswiring of indoor/outdoor connecting at twin, triple or quadruple system ⑧ Room temperature thermistor/ liquid pipe temperature thermistor detection is defective.	① Check the drain pump. ② Check whether water can be drained. ③ Check the resistance of the float switch. ④ Check the connector contact failure. ⑤ Check the float switch lead wire mounted. Check the filter clogging. ⑥ Check the piping connection. ⑦ Check the indoor/outdoor connecting wires. ⑧ Check the room temperature display of remote controller. Check the indoor liquid pipe temperature display of outdoor controller board.
E0 or E4	**Remote controller transmission error(E0)/signal receiving error(E4)** ① Abnormal if main or sub remote controller cannot receive any transmission normally from indoor unit of refrigerant address “0” for 3 minutes. (Check code: E0) ② Abnormal if sub remote controller could not receive any signal for 2 minutes. (Check code: E0) ① Abnormal if indoor controller board can not receive any data normally from remote controller board or from other indoor controller board for 3 minutes. (Check code: E4) ② Indoor controller board cannot receive any signal from remote controller for 2 minutes. (Check code: E4)	① Contact failure at transmission wire of remote controller ② All remote controllers are set as “sub” remote controller. In this case, E0 is displayed on remote controller, and E4 is displayed at LED (LED1, LED2) on the outdoor controller circuit board. ③ Miswiring of remote controller ④ Defective transmitting receiving circuit of remote controller ⑤ Defective transmitting receiving circuit of indoor controller board of refrigerant addresses “0”. ⑥ Noise has entered into the transmission wire of remote controller.	① Check disconnection or looseness of indoor unit or transmission wire of remote controller. ② Set one of the remote controllers “main” if there is no problem with the action above. ③ Check wiring of remote controller. • Total wiring length: max. 500 m (Do not use cable x with 3 cores or more.) • The number of connecting indoor units: max. 16 units • The number of connecting remote controller: max. 2 units If the cause of trouble is not in above ①–③, ④ Diagnose remote controllers. a) When “RC OK” is displayed, Remote controllers have no problem. Turn the power off, and on again to check. If abnormality generates again, replace indoor controller board. b) When “RC NG” is displayed, Replace remote controller. c) When “RC E3” or “ERC 00-66” is displayed, noise may be causing abnormality. Note: If the unit is not normal after replacing indoor controller board in group control, indoor controller board of address “0” may be abnormal.
E3 or E5	**Remote controller transmission error(E3)/signal receiving error(E5)** ① Abnormal if remote controller could not find blank of transmission path for 6 seconds and could not transmit. (Check code: E3) ② Remote controller receives transmitted data at the same time and compares the received and transmitted data. Abnormal if these data are judged to be different 30 continuous times. (Check code: E3) ① Abnormal if indoor controller board could not find blank of transmission path. (Check code: E5) ② Indoor controller board receives transmitted data at the same time and compares the received and transmitted data. Abnormal if these data are judged to be different 30 continuous times. (Check code: E5)	① 2 remote controllers are set as “main.” (In case of 2 remote controllers) ② Remote controller is connected with 2 indoor units or more. ③ Repetition of refrigerant address ④ Defective transmitting receiving circuit of remote controller ⑤ Defective transmitting receiving circuit of indoor controller board ⑥ Noise has entered into transmission wire of remote controller.	① Set a remote controller to main, and the other to sub. ② Remote controller is connected with only one indoor unit. ③ The address changes to a separate setting. ④–⑥ Diagnose remote controller. a) When “RC OK” is displayed, remote controllers have no problem. Turn the power off, and on again to check. When becoming abnormal again, replace indoor controller board. b) When “RC NG” is displayed, replace remote controller. c) When “RC E3” or “ERC 00-66” is displayed, noise may be causing abnormality.

TCH070A.indd 29 7/2/2565 16:46:50

Check code	Abnormal point and detection method	Cause	Countermeasure
E6	**Indoor/outdoor unit communication error (Signal receiving error)** ① Abnormal if indoor controller board cannot receive any signal normally for 6 minutes after turning the power on. ② Abnormal if indoor controller board cannot receive any signal normally for 3 minutes. ③ Consider the unit abnormal under the following condition: When 2 or more indoor units are connected to an outdoor unit, indoor controller board cannot receive a signal for 3 minutes from outdoor controller circuit board, a signal which allows outdoor controller circuit board to transmit signals.	① Contact failure, short circuit or, miswiring (converse wiring) of indoor/outdoor unit connecting wire ② Defective transmitting receiving circuit of indoor controller board ③ Defective transmitting receiving circuit of indoor controller board ④ Noise has entered into indoor/ outdoor unit connecting wire.	Check LED display on the outdoor control circuit board. (Connect A-control service tool, PAC-SK52ST.) Refer to outdoor unit service manual. ① Check disconnection or looseness of indoor/ outdoor unit connecting wire of indoor unit or outdoor unit. Check all the units in case of twin triple indoor unit system. ②–④ Turn the power off, and on again to check. If abnormality generates again, replace indoor controller board or outdoor controller circuit board. Note: Other indoor controller board may have defect in the case of twin triple indoor unit system.
E7	**Indoor/outdoor unit communication error (Transmitting error)** Abnormal if “1” receiving is detected 30 times continuously though indoor controller board has transmitted “0”.	① Defective transmitting receiving circuit of indoor controller board ② Noise has entered into power supply. ③ Noise has entered into outdoor control wire.	①–③ Turn the power off, and on again to check. If abnormality generates again, replace indoor controller board.
FB (Fb)	**Indoor controller board** Abnormal if data cannot be read normally from the nonvolatile memory of the indoor controller board.	① Defective indoor controller board	① Replace indoor controller board.
E1 or E2	**Remote controller control board** ① Abnormal if data cannot be read normally from the nonvolatile memory of the remote controller control board. (Check code: E1) ② Abnormal if the clock function of remote controller cannot be operated normally. (Check code: E2)	① Defective remote controller	① Replace remote controller.
PB (Pb)	**Fan motor trouble**	① Defective fan motor ② Defective indoor controller board	①② Refer to "9-6-2. DC fan motor (fan motor/indoor controller circuit board".
PL	**Abnormal refrigerant circuit** During Cooling, Dry, or Auto Cooling operation, the following conditions are regarded as failures when detected for 1 second. a)The compressor continues to run for 30 or more seconds. b)The liquid pipe temperature or the condenser/evaporator temperature is 167°F [75°C] or more. **<u>These detected errors will not be cancelled until the power source is reset.</u>**	① Abnormal operation of 4-way valve ② Disconnection of or leakage in refrigerant pipes ③ Air into refrigerant piping ④ Abnormal operation (no rotation) of indoor fan · Defective fan motor · Defective indoor control board ⑤ Defective refrigerant circuit (clogging)	① **<u>When this error occurs, be sure to replace the 4-way valve.</u>** ② Check refrigerant pipes for disconnection or leakage. ③ After the recovery of refrigerant, vacuum dry the whole refrigerant circuit. ④Refer to "9-6-2. DC fan motor (fan motor/ indoor controller circuit board". ⑤ Check refrigerant circuit for operation. **<u>To avoid entry of moisture or air into refrigerant circuit which could cause abnormal high pressure, purge air in refrigerant circuit or replace refrigerant.</u>**

TCH070A.indd 30 7/2/2565 16:46:50

9-4. TROUBLESHOOTING BY INFERIOR PHENOMENA

Note: Refer to the manual of outdoor unit for the detail of remote controller.

Phenomena	Cause	Countermeasure
(1)Upward/downward vane performance failure	① The vane is not downward during defrosting and heat preparation and when the thermostat is OFF in HEAT mode. (Working of COOL protection function) ② Vane motor does not rotate. • Defective vane motor • Breaking of wire or connection failure of connector ③ Upward/downward vane does not work. • The vane is set to fixed position.	① Normal operation (The vane is set to horizontal regardless of remote control.) ② Check ② (left). • Check the vane motor. (Refer to "9-6. HOW TO CHECK THE PARTS".) • Check for breaking of wire or connection failure of connector. ③ Normal operation (Each connector on vane motor side is disconnected or setting the fixed vanes by wired remote controller.)
(2)Receiver for IR wireless remote controller	① Weak batteries of IR wireless remote controller ② Contact failure of connector (CNB) on IR wireless remote controller board (Insert failure) ③ Contact failure of connector (CN90) on indoor controller board (Insert failure) ④ Contact failure of connector between IR wireless remote controller board and indoor controller board	① Replace batteries of IR wireless remote controller. ②–④ Check contact failure of each connector. If no problems are found of connector, replace indoor controller board. When the same trouble occurs even if indoor controller board is replaced, replace IR wireless remote controller board.

TCH070A.indd 31 7/2/2565 16:46:50

9-5. EMERGENCY OPERATION

9-5-1. When IR wireless remote controller troubles or its battery is exhausted

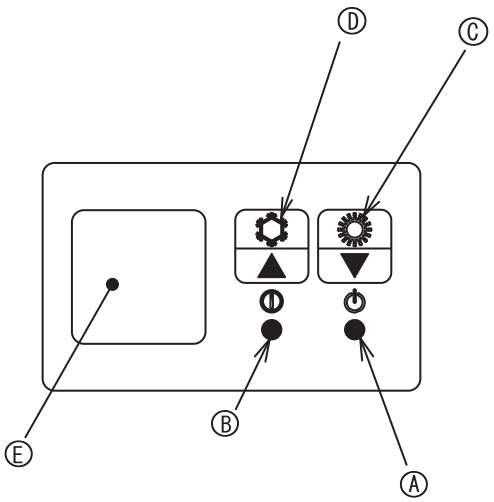

Ⓐ DEFROST/STAND BY lamp (Orange)
Ⓑ Operation lamp (Green)
Ⓒ Emergency operation switch (heating)
Ⓓ Emergency operation switch (cooling)
Ⓔ Receiver

When the remote controller cannot be used
When the batteries of the remote controller run out or the remote controller malfunctions, the emergency operation can be done using the emergency buttons on the grille.

Starting operation
- To operate the cooling mode, press the button Ⓓ for more than 2 seconds.
- To operate the heating mode, press the button Ⓒ for more than 2 seconds.

Note: Lighting of the Operation lamp Ⓑ means the start of operation.

Details of emergency mode are as shown below.

Operation mode	COOL	HEAT
Set temperature	75°F [24°C]	75°F [24°C]
Fan speed	High	High
Airflow direction	Horizontal	Downward 5

Stopping operation
- To stop operation, press the button Ⓓ or the button Ⓒ.

9-5-2. When wired remote controller or indoor unit microprocessor fails

1.When the wired remote control or the indoor unit microcomputer has failed, but all other components work properly, setting the switch (SWE) on the indoor controller board ON will begin the indoor unit Emergency Operation.
When Emergency Operation is activated, the indoor unit operates as follows:
(1) Indoor fan is running at high speed. (2) Drain pump is working.
Note on the IR wireless remote control: when the remote control does not function, it is possible to activate Emergency Operation by using the indoor unit emergency operation switch (SW1, SW2 of the IR wireless signal receiver board).
However, if the indoor unit microprocessor has failed, it is necessary to proceed with points 2 and 3 below as in the case of the wired remote control.

2.When activating Emergency Operation of the cooling or heating, set the switch (SWE) on the indoor controller board and activate Emergency Operation of the outdoor unit.
For details on how to activate Emergency Operation of the outdoor unit, refer to the outdoor unit wiring diagram.

3.Before activating Emergency Operation, check the following points:
(1)Emergency Operation cannot be activated when:
- the outdoor unit malfunctions. • the indoor fan malfunctions.
- it has detected the malfunction of drain pump during self-diagnosing.

(2)Emergency Operation becomes continuous only by switching the power source on/off.
ON/OFF on the remote control or temperature control etc. does not function.
(3)Avoid operating for a long time when the outdoor unit begins defrosting while Emergency Operation of the heating is activated because it will start to blow cold air.
(4)Emergency cooling should be limited to 10 hours maximum (The indoor unit heat exchanger may freeze).
(5)After Emergency Operation has been deactivated, set the switches, etc. to their original positions.
(6)Movement of the vanes does not work in Emergency Operation, therefore slowly set them manually to the appropriate position.

TCH070A.indd 32 7/2/2565 16:46:50

9-6. HOW TO CHECK THE PARTS

PLA-A12EA7R1.TH PLA-A18EA7R1.TH PLA-A24EA7R1.TH PLA-A30EA7R1.TH PLA-A36EA7R1.TH PLA-A42EA7R1.TH

Parts name	Check points
Room temperature thermistor (TH1) Pipe temperature thermistor/liquid(TH2) Condenser/Evaporator temperature thermistor (TH5)	Disconnect the connector then measure the resistance with a tester. (At the ambient temperature of 50 to 86˚F [10 to 30˚C]) Normal: 4.3 to 9.6 kΩ Abnormal: Opened or short - circuited Refer to “9-6-1. Thermistor”.
Vane motor (MV) 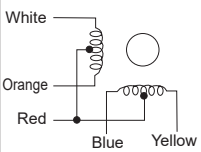 	Measure the resistance between the terminals with a tester. (At the ambient temperature of 68 to 86˚F [20 to 30˚C]) Connector: Red - Yellow (⑤–③, ⑩–⑧, ⑮–⑬, ⑳–⑱) Red - Blue (⑤–①, ⑩–⑥, ⑮–⑪, ⑳–⑯) Red - Orange (⑤–④, ⑩–⑨, ⑮–⑭, ⑳–⑲) Red - White (⑤–②, ⑩–⑦, ⑮–⑫, ⑳–⑰) Normal: 300 Ω ± 7% Abnormal: Open or short
Drain pump (DP) 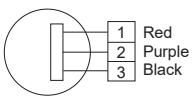 	① Check if the drain float switch works properly. ② Check if the drain pump works and drains water properly in cooling operation. ③ If no water drains, confirm that the check code P5 will not be displayed 10 minutes after the operation starts. Note: The drain pump for this model is driven by the internal DC motor of controller board, so it is not possible to measure the resistance between the terminals. Normal Red–Black: Input 13 V DC → The motor starts to rotate. Purple–Black: Abnormal (check code P5) if it outputs 0–13 V square wave (5 pulses/rotation), and the number of rotation is not normal.
Drain float switch (FS) 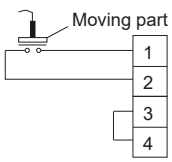 	Measure the resistance between the terminals with a tester. State of moving part: UP — Normal: Short — Abnormal: Other than short State of moving part: DOWN — Normal: Open — Abnormal: Other than open 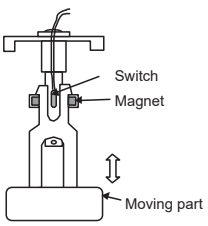
i-See sensor (Option) 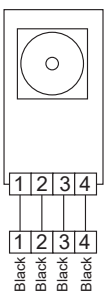 	Turn the power ON while the i-See sensor connector is connected to the CN4Z on indoor controller board. A communication between the indoor controller board and i-See sensor board is made to detect the connection. Normal: When the operation starts, the motor for i-See sensor is driven to rotate the i-See sensor. Abnormal: The motor for i-See sensor is not driven when the operation starts. Note: The voltage between the terminals cannot be measured accurately since it is pulse output.
Vane motor for i-See sensor (Option) 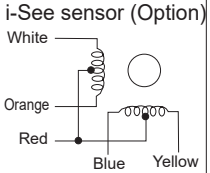 	Measure the resistance between the terminals with a tester. (At the ambient temperature of 68 to 86˚F [20 to 30˚C]) Connector: Red - Yellow Red - Blue Red - Orange Red - White Normal: 250 Ω ± 7% Abnormal: Open or short

TCH070A.indd 33 7/2/2565 16:46:50

9-6-1. Thermistor

<Thermistor characteristic graph>

Thermistor for lower temperature	Room temperature thermistor(TH1) Pipe temperature thermistor/liquid(TH2) Condenser/evaporator temperature thermistor(TH5)

Thermistor R_0=15 kΩ ± 3%
Fixed number of B=3480 ± 2%

$$t(℃)Rt=15\exp\{3480(\frac{1}{273+t}-\frac{1}{273})\}$$

$$T(^{\circ}F)Rt=15\exp\{3480(\frac{1}{273+\frac{T-32}{1.8}}-\frac{1}{273})\}$$

32˚F	[0℃]	15 kΩ
50˚F	[10℃]	9.6 kΩ
68˚F	[20℃]	6.3 kΩ
77˚F	[25℃]	5.4 kΩ
86˚F	[30℃]	4.3 kΩ
104˚F	[40℃]	3.0 kΩ

<Thermistor for lower temperature>

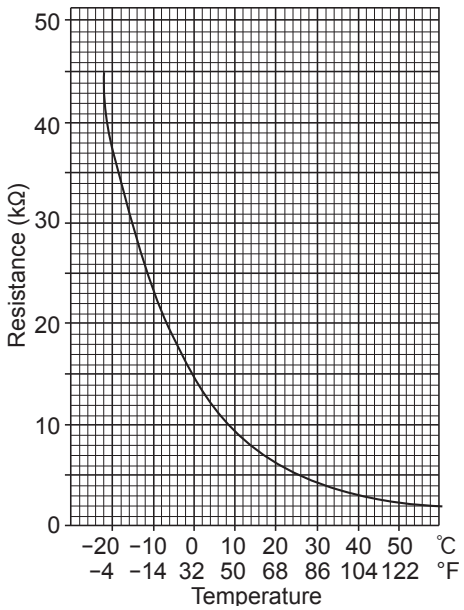

9-6-2. DC fan motor (fan motor/indoor controller board)

Check method of DC fan motor (fan motor/indoor controller circuit board)

① Notes
- High voltage is applied to the connecter (CNMF) for the fan motor. Pay attention to the service.
- Do not pull out the connector (CNMF) for the motor with the power supply on.
  (It causes trouble of the indoor controller circuit board and fan motor.)

② Self check
Symptom : The indoor fan cannot rotate.

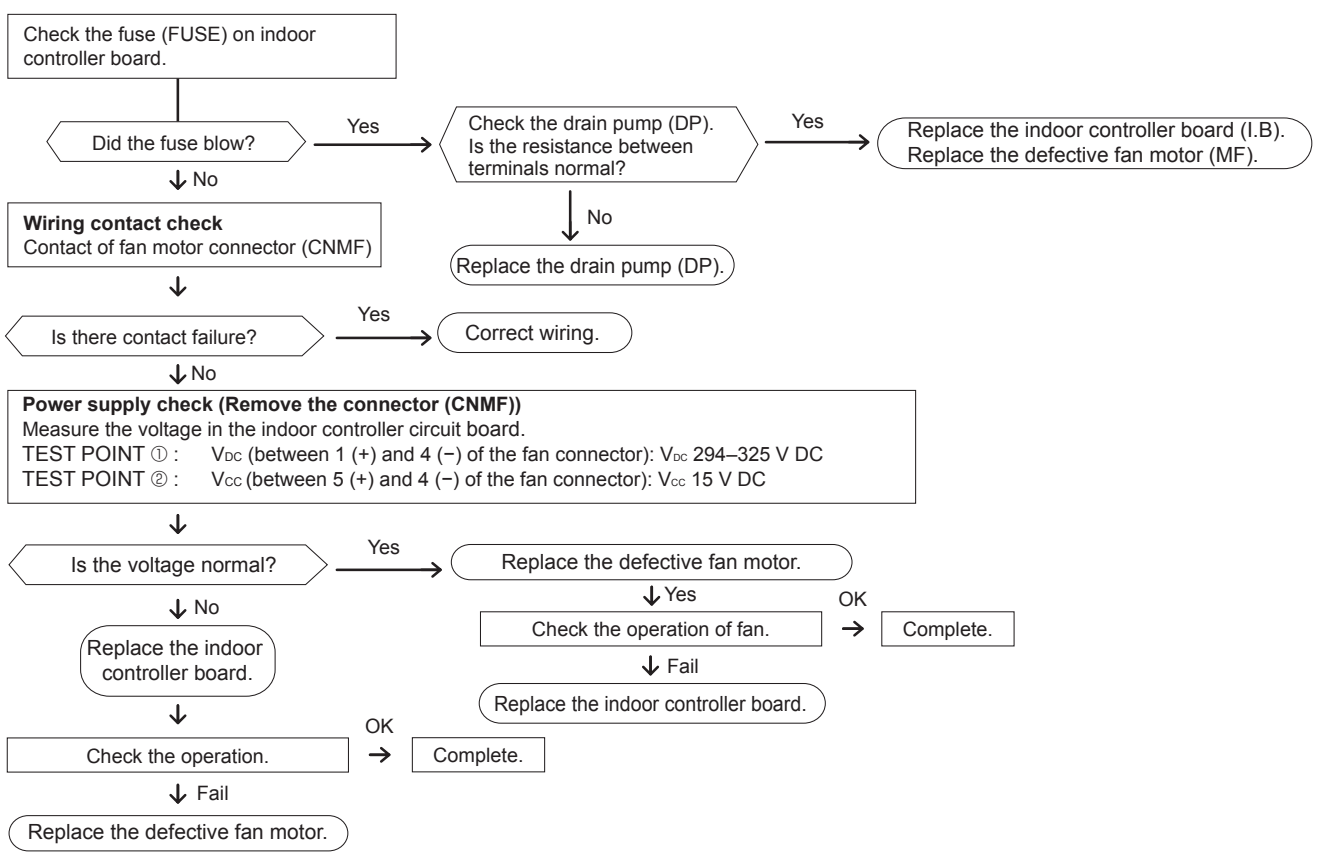

TCH070A.indd 34 7/2/2565 16:46:50

9-7. TEST POINT DIAGRAM

Indoor controller board

PLA-A12EA7R1.TH PLA-A18EA7R1.TH PLA-A24EA7R1.TH
PLA-A30EA7R1.TH PLA-A36EA7R1.TH PLA-A42EA7R1.TH

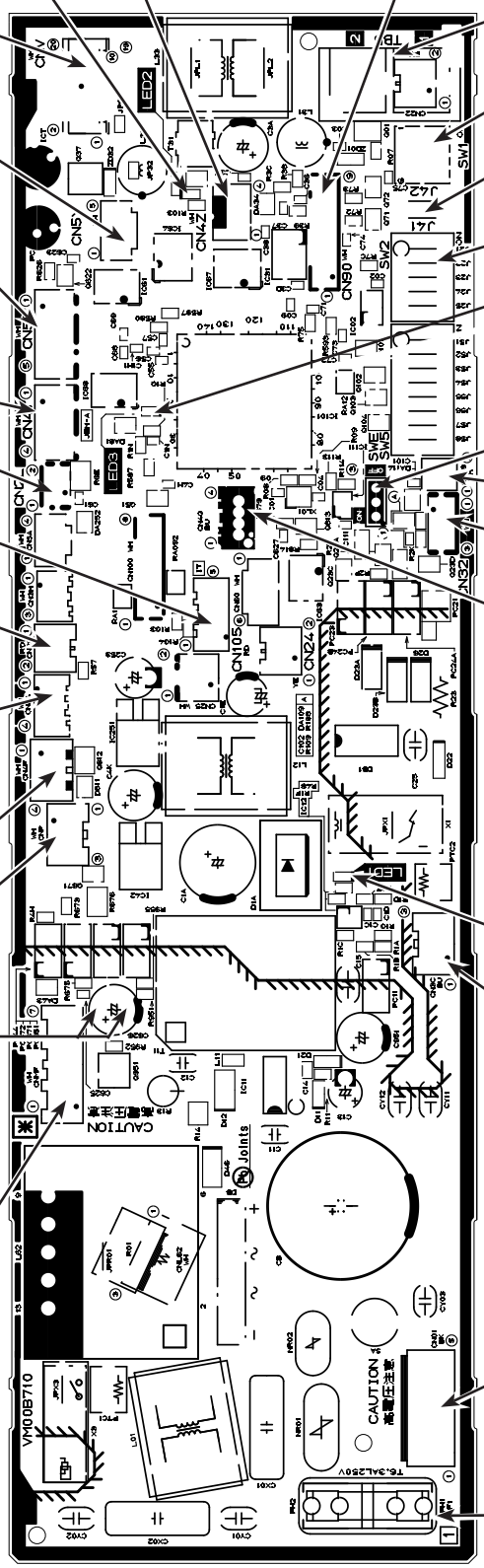

TCH070A.indd 35 7/2/2565 16:46:52

9-8. FUNCTIONS OF DIP SWITCH AND JUMPER WIRE

Each function is controlled by the DIP switch and the jumper wire on indoor controller board.

PLA-A12EA7R1.TH PLA-A18EA7R1.TH PLA-A24EA7R1.TH
PLA-A30EA7R1.TH PLA-A36EA7R1.TH PLA-A42EA7R1.TH

The black square (■) indicates a switch position.
Jumper wire (○: Short ×: Open)

Jumper wire	Functions	Setting by the DIP switch and jumper wire	Remarks
SW1	Model settings	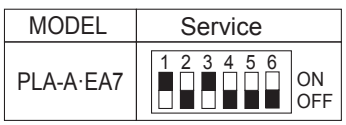	
SW2	Capacity settings	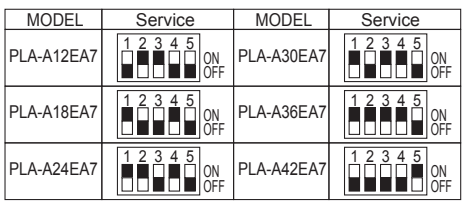	
J41 J42	Pair number setting with IR wireless remote controller	Wireless remote controller setting / Control PCB setting 0: J41 ○, J42 ○ 1: J41 ×, J42 ○ 2: J41 ○, J42 × 3 to 9: J41 ×, J42 ×	<Initial setting> IR wireless remote controller: 0 Control PCB: ○ (for both J41 and J42) 4 pair number settings are supported. The pair number settings of the wireless remote controller and indoor control PCB (J41/J42) are given in the table on the left. ('×' in the table indicates the jumper wire is disconnected.)

TCH070A.indd 36 7/2/2565 16:46:52

10 FUNCTION SETTING

10-1. UNIT FUNCTION SETTING BY THE REMOTE CONTROLLER

Each function can be set as necessary using the remote controller. The setting of function for each unit can only be done by the remote controller.

(1) Functions available when setting the unit number to 00
Refer to the service manual that comes with each outdoor unit.

(2) Functions available when setting the unit number to 01–03 or AL (07 in case of wireless remote controller)

Function	Settings	Mode No.	Setting No.	Initial setting	Setting
Filter sign	100 Hr	07	1		
	2500 Hr		2	○	
	No filter sign indicator		3		
Fan speed	Silent (low ceiling)	08	1		
	Standard		2	○	
	High ceiling		3		
No. of air outlets	4 directions	09	1	○	
	3 directions		2		
	2 directions		3		
Installed options (High-efficiency filter)	Not supported	10	1	○	
	Supported		2		
Up/down vane setting	Downward setting (vanes angle setup ③)	11	1		
	Middle setting (vanes angle setup ①)		2	○	
	Draft-less setting (vanes angle setup ②)*1		3		
3D i-See sensor positioning	Position ①	12*2	1		
	Position ②		2		
	Position ③ (Default)		3	○	
3D i-See sensor ceiling height setting (when installing the 3D i-See sensor panel)	Low ceiling (ceiling height: less than 2.7m [8.9 ft])	26	1		
	Standard (ceiling height: 2.7–3.5 m [8.9–11.5 ft])		2	○	
	High ceiling (ceiling height: 3.5–4.5 m [11.5–14.8 ft])		3		
Fan speed during the cooling thermostat is OFF	Setting fan speed	27	1	○	
	Stop		2		
	Extra low		3		

*1 Because condensation may form, do not use this setting in a high-temperature, high-humidity environment.

*2 When the 3D i-See sensor corner panel position is changed, change this mode. For more details, refer to the Installation Manual.

TCH070A.indd 37 7/2/2565 16:46:52

11 SPECIAL FUNCTION

11-1. ROTATION FUNCTION (AND BACK-UP FUNCTION, 2ND STAGE CUT-IN FUNCTION)

11-1-1. Operation

(1) Rotation function (and Back-up function)

Outline of functions

- Main and sub unit operate alternately according to the interval of rotation setting.
  Note: Main and sub unit should be set by refrigerant address. (Outdoor DIP switch setting)
  Refrigerant address "00" ⟶ Main unit
  Refrigerant address "01" ⟶ Sub unit
- When error occurs to one unit, another unit will start operation. (Back-up function)

System constraint

- This function is available only by the grouping control system (INDOOR UNIT : OUTDOOR UNIT=1:1) of 2 refrigerant groups. (Refer to Fig. 1)
- Main indoor unit should be connected for wired remote controller and the transmission line (TB5) for main and sub unit should also be connected. (Refer to Fig. 1)
  (This function cannot be set by wireless remote controller.)
- Set refrigerant address of each unit. (DIP switch on the outdoor unit ··· Refrigerant address 00/01)

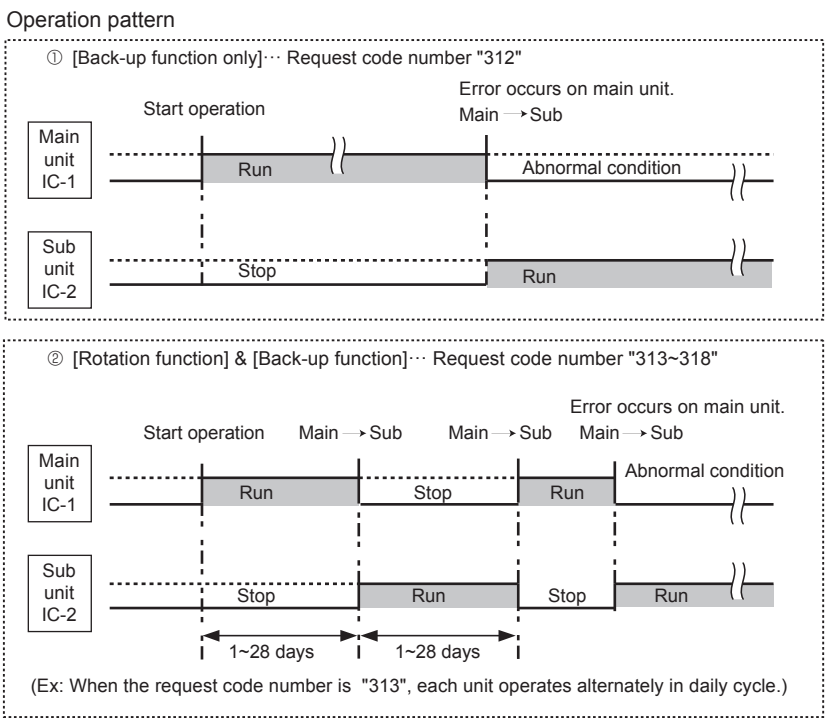

Fig. 1

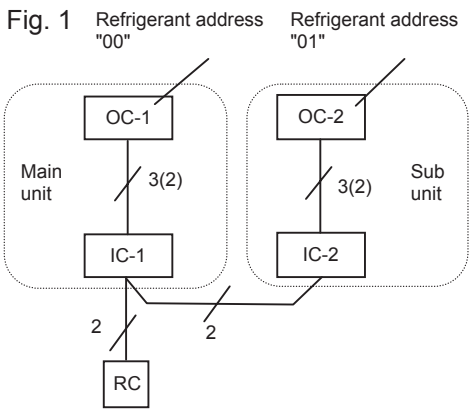

OC : Outdoor unit
IC : Indoor unit
RC : Wired remote controller

Note:

- When the unit is restarted to operate after turning off the power or OFF operation, the unit which was operating will start operation.
- To operate the main unit, refer to "11-1-2. How to set rotation function (Back-up function, 2nd stage cut-in function)" and set the request code No. which is not the same as the current one, then set again the former request code No.

(2) 2nd stage cut-in function

Outline of functions

- When the 1st unit cannot supply sufficient capacity for exceptionally high-demand conditions and the actual room temperature reaches set point (*), the 2nd unit starts operation in conjunction with the 1st unit.
- Once the actual room temperature goes down to −7.2°F [4℃] below set point (*), the 2nd unit stops operation automatically.
  (* set point = set temperature by R/C (remote controller) + 7.2, 10.8, 14.4°F [4, 6, 8°C] (selectable))
- Number of operating units is determined according to the room temperature and set point.
- When room temperature reaches higher than set point, standby unit starts. (2 units operation)
- When room temperature falls below set point −7.2°F [−4℃], standby unit stops. (1 unit operation)

TCH070A.indd 38 7/2/2565 16:46:52

• **System constraint**
· This function is available only in cooling mode.

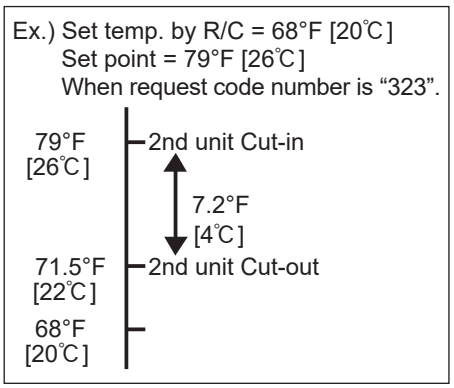

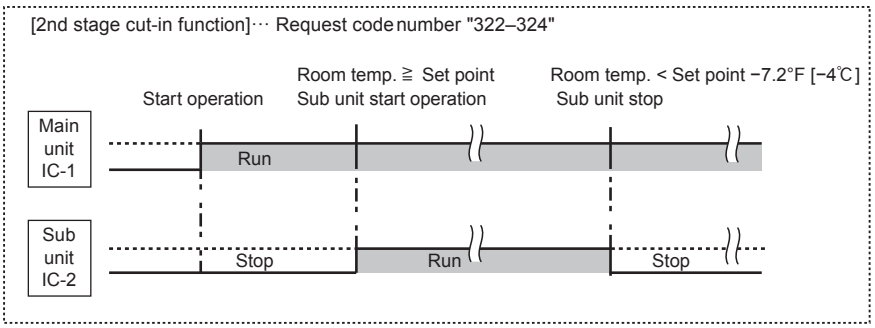

11-1-2. How to set rotation function (Back-up function, 2nd stage cut-in function)
You can set these functions by wired remote controller. (Maintenance monitor)

NOTICE

Both main and sub unit should be set in same setting.
Every time replacing indoor controller board for servicing, the function should be set again.

(1) Request Code List

Rotation setting

Setting No. (Request code)	Setting contents	Initial setting
No.1 (310)	Monitoring the request code of current setting	
No.2 (311)	Rotation and Back-up OFF (Normal group control operation)	◎
No.3 (312)	Back-up function only	
No.4 (313)	Rotation ON (Alternating interval = 1day) and back-up function	
No.5 (314)	Rotation ON (Alternating interval = 3days) and back-up function	
No.6 (315)	Rotation ON (Alternating interval = 5days) and back-up function	
No.7 (316)	Rotation ON (Alternating interval = 7days) and back-up function	
No.8 (317)	Rotation ON (Alternating interval = 14days) and back-up function	
No.9 (318)	Rotation ON (Alternating interval = 28days) and back-up function	

2nd unit cut-in setting

Setting No. (Request code)	Setting contents	Initial setting
No.1 (320)	Monitoring the request code of current setting	
No.2 (321)	Cut-in function OFF	◎
No.3 (322)	Cut-in function ON(Set point = Set temp.+ 7.2°F [4°C]	
No.4 (323)	Cut-in function ON(Set point = Set temp.+ 10.8°F [6°C]	
No.5 (324)	Cut-in function ON(Set point = Set temp.+ 14.4°F [8°C]	

TCH070A.indd 39 7/2/2565 16:46:52

(2) How to send a request code

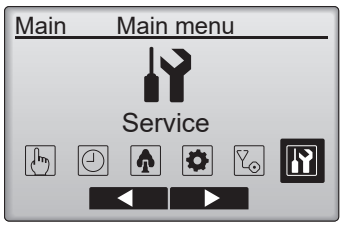

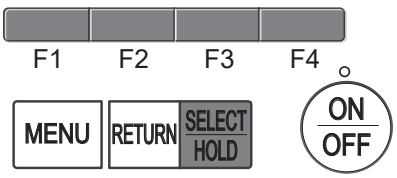

① Press the [▣] button.

② Select "Service" with the F2 and F3 and press the [SELECT] button.

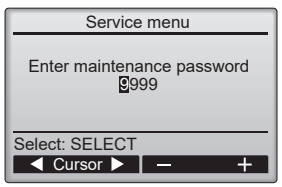

③ Enter the current maintenance password (4 numerical digits).
- Move cursor to the digit you want to change with the F1 or F2 button.
- Set each number (0 through 9) with the F3 or F4 button.

(Note: The initial maintenance password is "9999".)

④ Then, press the [SELECT] button.

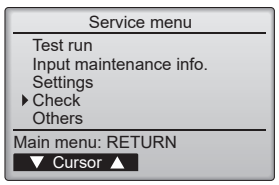

⑤ Select "Check" with the F1 or F2 button, and press the [SELECT] button.

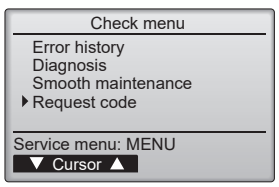

⑥ Select "Request code" with the F1 or F2 button, and press the [SELECT] button.

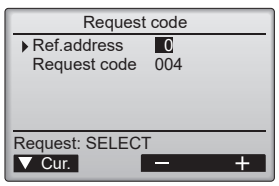

⑦ Set the Refrigerant address and Request code.
- Select the item to be changed with the F1 or F2 button.
- Select the required setting with the F3 or F4 button.

⑧ Press the F3 or F4 button to set the Refrigerant address "0".

⑨ Press the F3 or F4 button to set the desired request code No.
- Rotation & Back up operation: Enter one request code from 311 to 318.
- 2nd stage cut-in operation: Enter one request code from 321 to 324.

⑩ Press the [SELECT] button. Data will be collected and displayed.

⑪ Press the F3 or F4 button to set the Refrigerant address "1".
Set above ⑨–⑩.

⑫ To return to the Service menu, press the [MENU] button.

TCH070A.indd 40 7/2/2565 16:46:52

11-2. BACK-UP HEATING FUNCTION

11-2-1. Operation

The back-up heater turns ON when both of the following conditions have been satisfied:

A) When the room temperature has not risen after the heater ON delay time has passed.

Note: The heater ON delay time starts when the condition of “set temperature − room temperature > 1°F [0.5℃]” has been satisfied.

B) Set temperature − room temperature ≧ 3°F [1.5℃]

The back-up heater turns OFF when the following condition has been satisfied:

• Set temperature − room temperature ≧ 1°F [0.5℃]

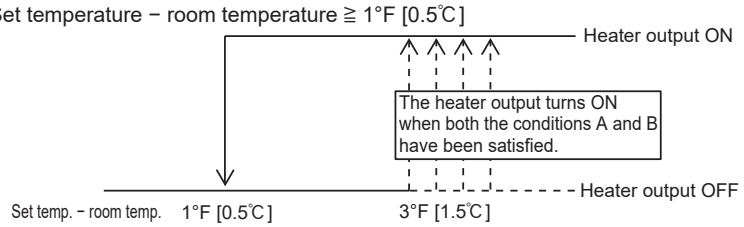

11-2-2. How to change the heater ON delay time

You can set these functions by wired remote controller.

Note that the change can be made only by the wired remote controller PAR-40MAA.

Notes:

1. Both main and sub unit should be set in the same setting.
2. Every time replacing indoor controller board for service, the function should be set again.
3. Stop the air-conditioner operation before changing the heater ON delay time.

Request code list

Setting No. (Request code)	Setting contents	Initial setting
No.1 (390)	Monitoring the request code of current setting	
No.2 (391)	10 minutes	
No.3 (392)	15 minutes	
No.4 (393)	20 minutes	○
No.5 (394)	25 minutes	

11-2-3. How to connect

When connecting to the connector CN24 of the indoor unit, use PAC-SE56RA-E (optional parts).

Note: For a twin indoor unit system, connect to the CN24 of the indoor unit that the remote controller is connected to.

TCH070A.indd 41 7/2/2565 16:46:52

12 DISASSEMBLY PROCEDURE

PLA-A12EA7R1.TH PLA-A18EA7R1.TH PLA-A24EA7R1.TH
PLA-A30EA7R1.TH PLA-A36EA7R1.TH PLA-A42EA7R1.TH

Be careful when removing heavy parts.

OPERATING PROCEDURE	PHOTOS/FIGURES
1. Removing the filter (1) Slide the knob of air intake grille toward the arrow to open the air intake grille. (See Figure 1.) (2) Pull down the lever of the air intake grille to remove the filter. (See Figure 2.)	**Figure 1** Air intake grille, Knob, Grille
2. Removing the air intake grille (1) Slide the knob of air intake grille toward the arrow to open the air intake grille. (See Figure 1.) (2) Remove the hook of drop prevention strap from the panel. (3) Remove the air intake grille.	**Figure 2** Hook of drop prevention strap, Filter, Filter, Air intake grille, Lever, Intake grille
3. Removing the electrical box cover (1) Remove the air intake grille and the filter. (Refer to procedure 2.) (2) Loosen the 2 electrical box cover fixing screws (M4×10) approximately 2 to 3 mm. (See Photo 1.) (3) Slide the electrical box cover toward the arrow to remove. (See Photo 2.)	**Photo 1** Electrical box cover fixing screws, Electrical box cover **Photo 2** Slide

TCH070A.indd 42 7/2/2565 16:46:53

OPERATING PROCEDURE	PHOTOS/FIGURES
4. Removing the room temperature thermistor (TH1) (1) Remove the electrical box cover. (See Photo 1 and 2.) (2) Disconnect the connector CN20 (Red) from the indoor controller board. (3) Remove the room temperature thermistor with its holder. (See Photo 4.)	**Photo 3** 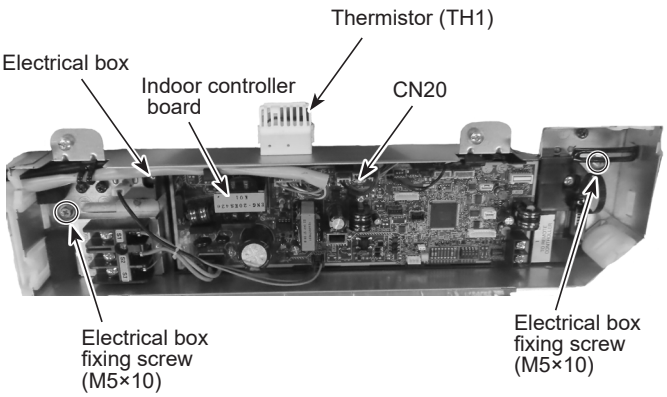 **Photo 4** 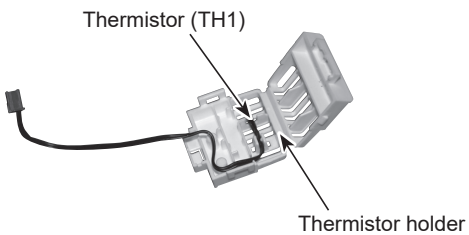
5. Removing the indoor controller board (I.B) (1) Remove the electrical box cover. (See Photo 1 and 2.) (2) Disconnect the connectors: CNMF (White) for fan motor CNV (White) for vane motor CN5Y (White) for motor for i-See sensor CN4Z (White) for sensor for i-See sensor (sensor) CN90 (White) for signal receiver CNP (White) for drain pump CN4F (White) for float switch CN44 (White) for thermistor (TH2/TH5) CN01 (Black) for Indoor/Outdoor connecting line CN3C (Blue) for Indoor/Outdoor transmission Disconnect the connectors for optional parts, if any. (3) For the unit controlled with the wireless remote controller, disconnect the lead wire connected to TB5 on the indoor controller board. TB5: Remote controller transmission connecting wire (4) Remove the indoor controller board (3 holders/4 hooks). (See Photo 4.)	**Photo 5** 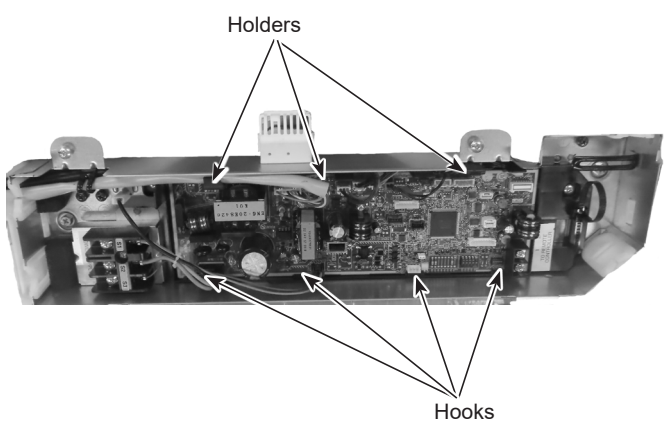

TCH070A.indd 43 7/2/2565 16:46:54

Be careful when removing heavy parts.

OPERATING PROCEDURE

6. Removing the electrical box

(1) Remove the electrical box cover (See Photo 1 and 2.) and the connectors (Refer to procedure 5.).
(2) Remove the electrical box fixing screws (M5 × 10: 2 screws). (See Photo 3.)
<Electrical parts in the electrical box>
• Terminal block for earth and reactor
• Indoor controller board
• Thermistor (TH)
(3) Remove the electrical box (2 hooks).

7. Removing the turbo fan

(1) Remove the electrical box. (See Photo 3 and refer to procedure 6)
(2) Remove the bell mouth (tapping screw 4×10: 2 screws). (See Photo 6.)
(3) Remove the nut and washer (1 nut). (See Photo 7 and 8.)
(4) Remove the turbo fan.

Photo 8

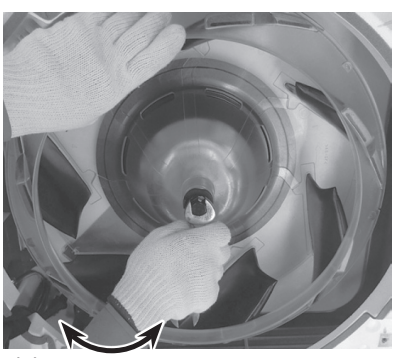

Turn this way to tighten. Turn this way to loosen.
(The same directions as the fan rotation.)

Rubber mount
Note: When re-attaching the motor mount, make sure that the thicker and faces the motor shaft.

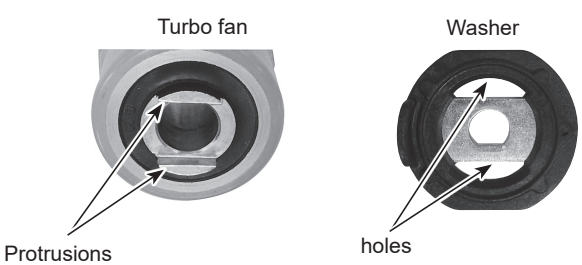

PHOTOS/FIGURES

Photo 6

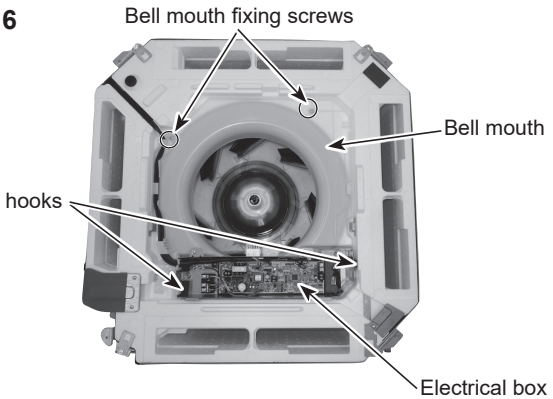

Photo 7

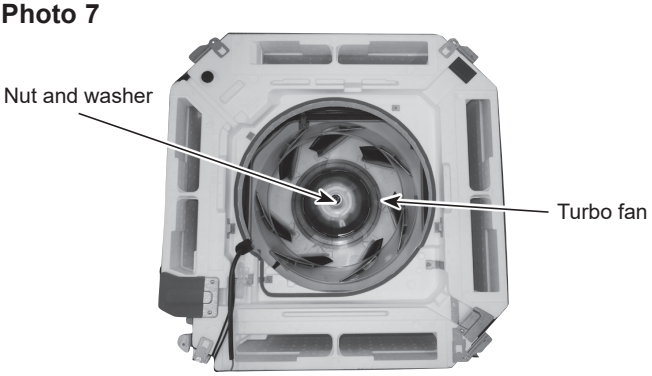

Photo 9

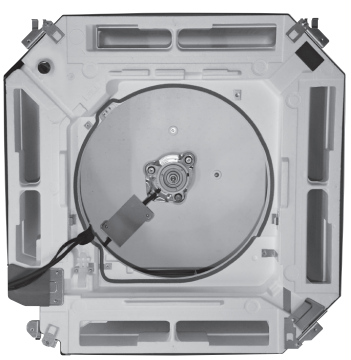

TCH070A.indd 44 7/2/2565 16:46:54

OPERATING PROCEDURE	PHOTOS/FIGURES
8. Removing the fan motor (MF) (1) Remove the turbo fan. (See Photo 7 and refer to procedure 8.) (2) Remove the lead cover (tapping screw 4×10: 2 screws). (See Photo 10.) (3) Loosen the 2 clamps. (4) Remove the 3 washer nuts (M5). (5) Remove the fan motor. (6) Remove the 3 rubber mounts. **Figure 3** **Cross section diagram** 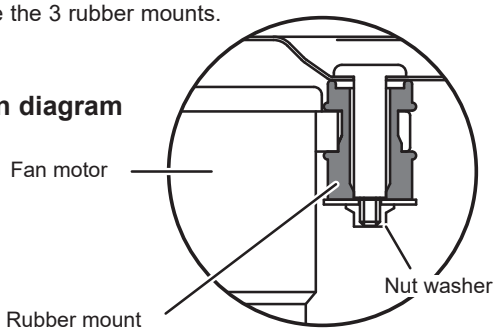 **Note: When re-attaching the motor mount, make sure that the thicker end faces the motor shaft.**	**Photo 10** 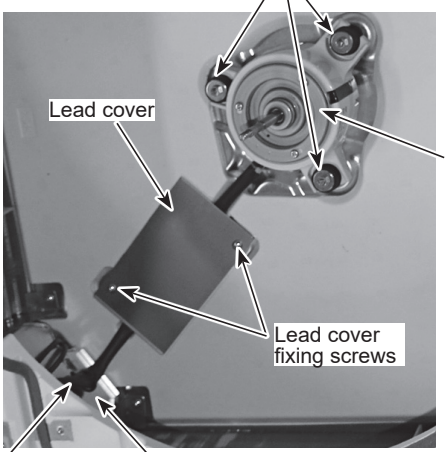
9. Removing the panel (1) Remove the electrical box fixing cover. (See Photo 1.) (2) Disconnect the connector for vane motor (CNV: White). (Refer to procedure 5.) (3) Loosen the 4 corner panel fixing screws (tapping screw 4×16). (See Figure 4.) (4) Slide the corner panel to the direction of the arrow ①, and remove the corner panel. (See Figure 4.) (5) Remove the 4 installation screws (M5×28). (See Photo 11.) (6) Release the 2 temporary hanging hooks to remove the grille. (See Photo 12.)	**Figure 4** 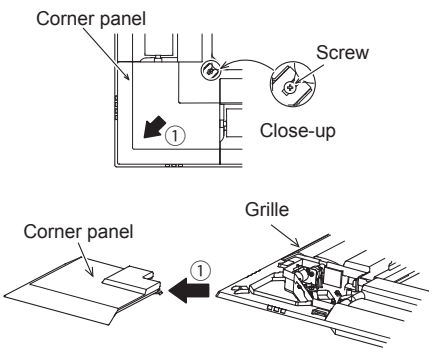 **Photo 11** 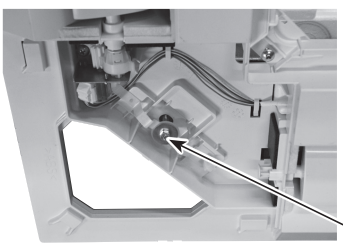 **Photo 12** 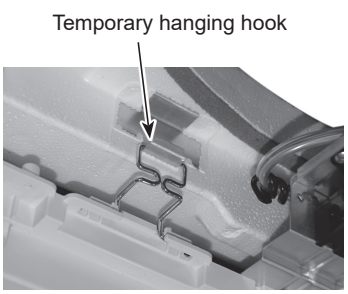

TCH070A.indd 45 7/2/2565 16:46:54

OPERATING PROCEDURE	PHOTOS/FIGURES
10. Removing the drain pan (1) Remove the electrical box. (See photo 3 and refer to 7.) (2) Remove the bell mouth (tapping screw 4×10 : 2 screws). (See Photo 6.) (3) Remove the drain pan (screw M5×10: 4 screws).	**Photo 13** 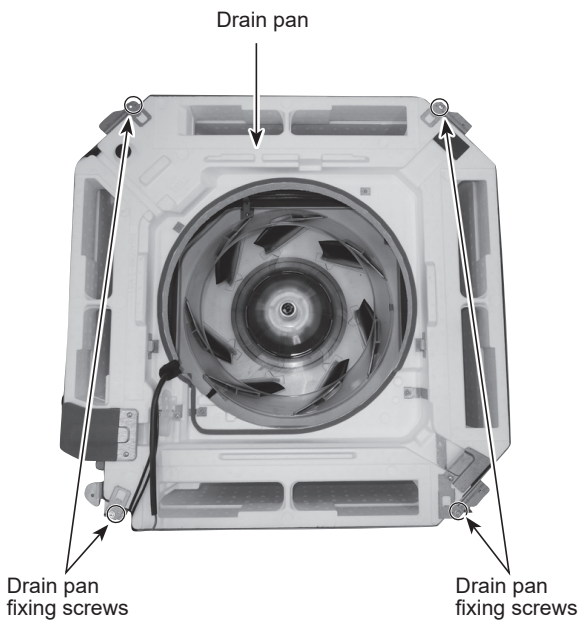
11. Removing the pipe temperature thermistor/liquid (TH2) and the condenser/evaporator temperature thermistor (TH5) (1) Remove the drain pan (Refer to procedure 10.) and loosen the 2 clamps of the coil plate. (See Photo 10.) (2) Remove the coil plate (tapping screw 4×10: 2 screws). (3) Disconnect the pipe temperature thermistor/liquid (TH2) and the condenser/evaporator temperature thermistor (TH5) from the holder.	**Photo 14** 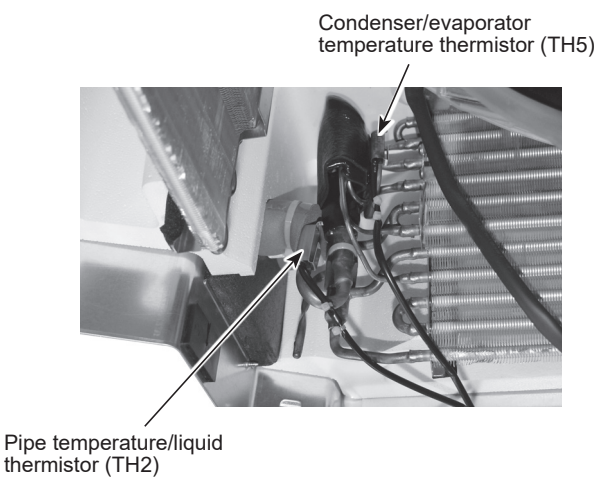

TCH070A.indd 46 7/2/2565 16:46:55

OPERATING PROCEDURE	PHOTOS/FIGURES
12. Removing the drain pump (DP) (1) Remove the drain pan. (Refer to procedure 10) (2) Cut the hose band and remove the hose. (3) Loosen the clamp of the drain pump. (4) Remove the drain pump (tapping screw 4×10: 2 screws/2 hooks). (5) Cut the drain pump base and lead wire fixing band. (See Figure 5) (6) Remove the lead wire of the drain pump from the clamp of the drain pump base. (See Figure 5) (7) Remove the drain pump (tapping screw: 3 screws). (See Figure 6) **Figure 6** 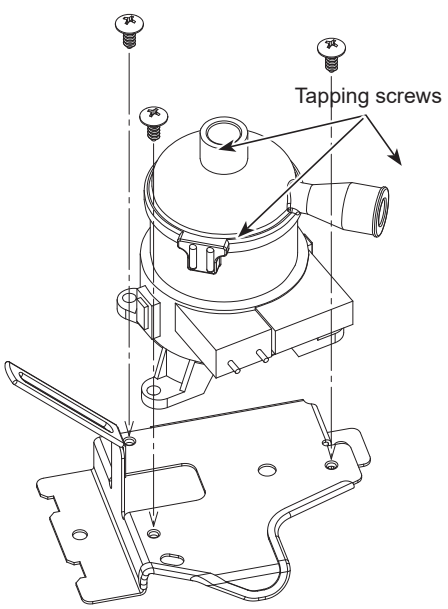 	**Photo 15** 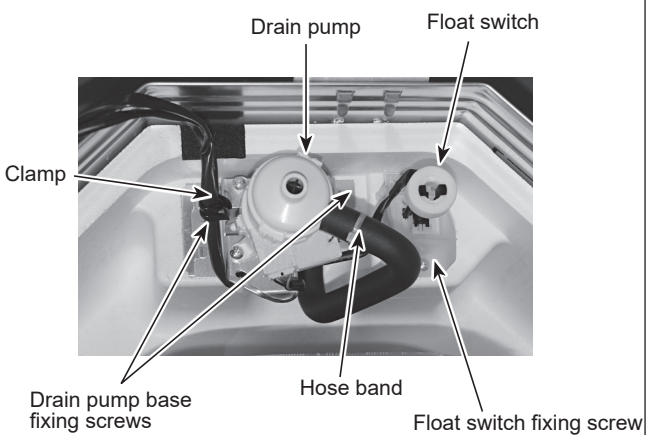 **Figure 5** 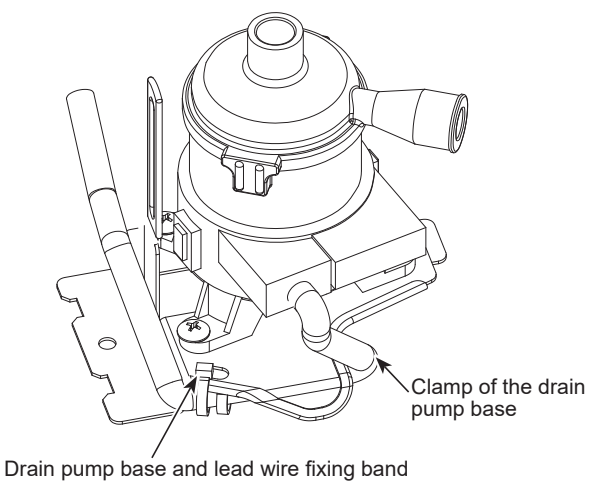
13. Removing the float switch (FS) (1) Remove the drain pan. (Refer to procedure 10) (2) Loosen the clamp of the drain pump. (See Photo 15) (3) Remove the float switch (tapping screw 4×10: 1 screw/1 hook). (See Photo 15) (4) Remove the float switch base and the lead wire fixing band. (See Photo 16) (5) Remove the lead wire from the U shaped portion of the float switch base. (See Photo 16) (6) Slide the float switch towards the arrow to remove from the float switch base.	**Photo 16** 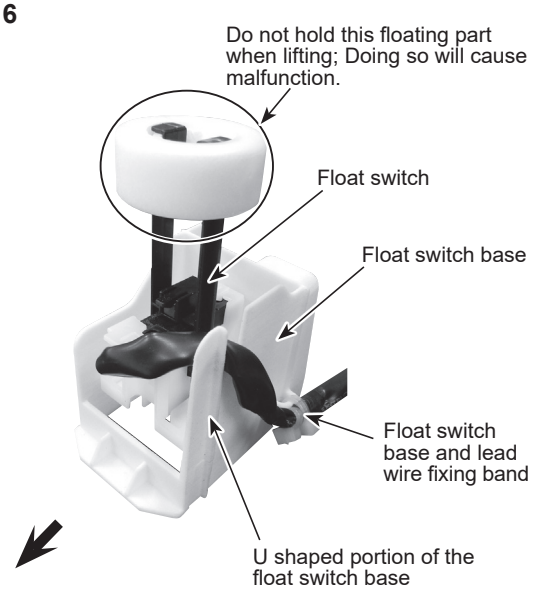

TCH070A.indd 47 7/2/2565 16:46:55

OPERATING PROCEDURE	PHOTOS/FIGURES
14. Removing the heat exchanger (1) Remove the drain pan. (Refer to procedure 10.) (2) Remove the piping cover (tapping screw 4×10: 3 screws). (3) Remove the coil plate (tapping screw 4×10: 2 screws). (4) Remove the heat exchanger fixing screws (tapping screw 4×10: 2 screws). (5) Remove the coil support (tapping screw 4×10: 1 screw each) ■ PLA-A12/18EA7: 1 coil support (See photo17.) ■ PLA-A24/30/36/42EA7: 3 coil supports (See photo18.) (6) Remove the heat exchanger.	**Photo 17** 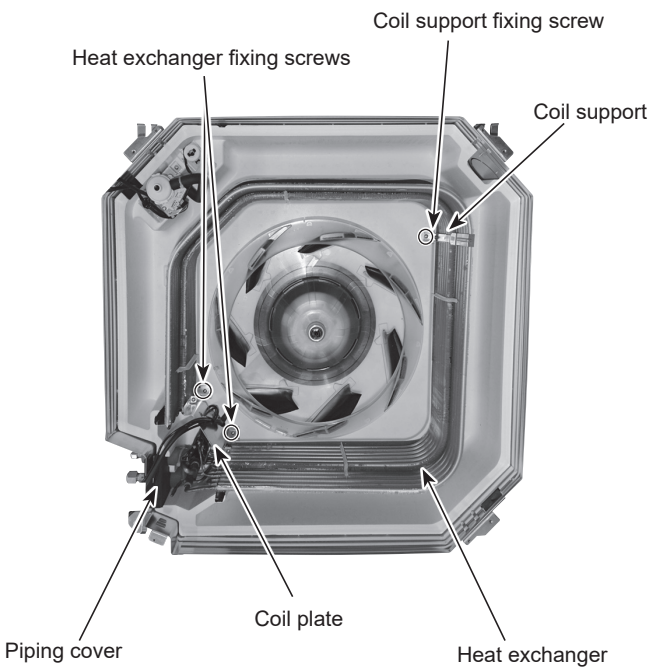 **Photo 18** 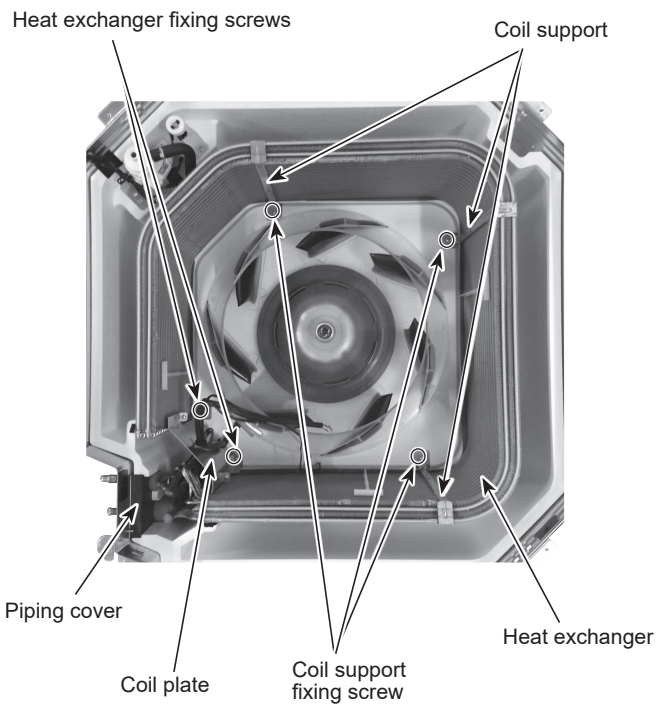

TCH070A.indd 48 7/2/2565 16:46:56

Mr.SLIM

MITSUBISHI ELECTRIC CORPORATION

HEAD OFFICE: TOKYO BUILDING, 2-7-3, MARUNOUCHI, CHIYODA-KU, TOKYO 100-8310, JAPAN

MITSUBISHI ELECTRIC CONSUMER PRODUCTS (THAILAND) CO., LTD.
700/406 MOO 7, TAMBON DON HUA ROH,
AMPHUR MUANG, CHONBURI 20000 THAILAND
Issued : Feb. 2022 No. TCH070 REVISED EDITION-A
Published: Oct. 2021. No. TCH070
Made in Thailand

Specifications are subject to change without notice.