MITSUBISHI ELECTRIC

MITSUBISHI ELECTRIC Package Air-Conditioner Optional parts
Installation Manual for SIGNAL RECEIVER

PAR-SR4LU-E

Safety precautions

- Before installation, make sure you read all the “Safety precautions”.
- The precautions herein provide very important points regarding safety. Make sure you follow them.
- Symbols used in this manual are categorized as follows according to the degree of risk when used improperly:

⚠Warning	Describes precautions that must be observed to prevent danger of injury or death of the user.
⚠Caution	Describes precautions that must be observed to prevent damage to the unit.

- After installation, describe the user “Safety precautions”, how to use, and how to care for and clean the unit following the operation manual, and test run the unit to confirm whether there are any problems.
  In addition, direct the user to keep this installation manual together with the operation manual, and, should the users change, to give the manuals to the new user.

⚠Warning

Ask the dealer or an authorized technician to install the unit.
- If the unit is installed improperly by the user, water leakage, electric shock, or fire may result.

Installation must be properly done following this installation manual.
- If the unit is installed improperly, water leakage, electric shock, or fire may result.

Before installation (Relocation)

⚠Caution

Do not use the unit in an unusual environmnet.
- If used in an environment with a large amount of volatile oil (including mechanical oil), steam, or sulfidizing gas or where it is high in salt content such as a seashore where the outdoor unit may become blocked by snow, performance may drop significantly or parts may become damaged.

Use proper electrical cables to meet the standard for current capacity.
- If improper electrical cables are used, short circuit, electric shock, or fire may result.

Make sure that heat insulation for refrigerant piping is properly installed to prevent bedewing.
- If heat insulation is not done properly, bedewing of the surfaces such as piping may result, which will make the ceilings, floors, or other valuable items wet.
- Insulation for the joint part must be done after an airtightness test.

Do not place polyethylene bags in reach of young children.
- Putting them over head will block breathing passages, which could result in suffocation.

Drain piping must be done properly according to the installation manual to drain water and must be heat insulated to prevent bedewing.
- If piping is not properly installed, water leakage may result, which will make the ceilings, floors, or other household items wet.

Transport and installation of the product must be done carefully.
- In principle, products over 20 kg must be carried by two or more people. Make sure you move the product holding only the designated handle but not a PP band and such.
  Use protectors to prevent injury; do not touch the fins or the edge of part with your bare hands.

1. Preparation for installing SIGNAL RECEIVER

Make sure to turn off the main power before work.

1. Open the intake grille and remove the corner panel. The corner panel is in opposite to where refrigerant pipes are (where local wires are drawn into).

   Note:
   - Discard only the removed corner panel.
   - Reuse the screw of the removed corner panel to install the signal receiver.
   - When installing the signal receiver during grille installation, complete the wiring work of grille before proceeding to the following procedure.
2. Loosen the 2 screws on the control box cover, and remove the control box cover by sliding; however, in this installation, the cover can hang temporarily.
3. Specify the target unit for wireless remote controller operation.
   Follow the procedure below to set the pair number on the indoor controller board and the wireless remote controller.

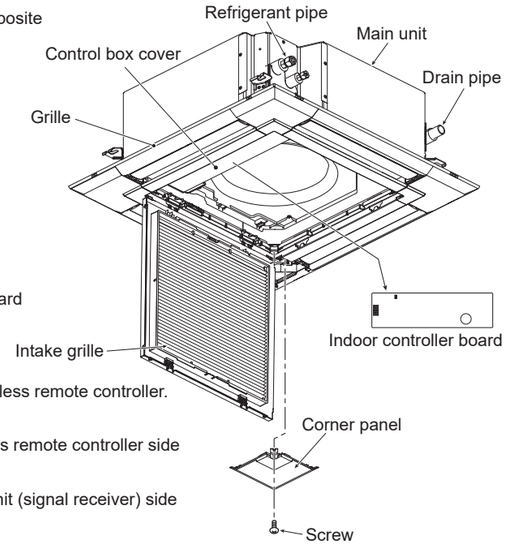

■ Setting pair number
- The pair number setting is to specify the unit which is to be operated by wireless remote controller.
  When specifying the unit is not required, this setting is not necessary.
  The pair number is set to “0” on indoor unit (signal receiver) side and wireless remote controller side at an initial setting.
- When specifying the unit is required, match the pair number on the indoor unit (signal receiver) side and on the wireless remote controller side as shown in the table below.

Pair number of wireless remote controller	Pair number of indoor unit		
	• When the unit is in combination with PLA-EA Cut jumper wire J41, J42, or both on the indoor controller board.	• When the unit is in combination with PLFY-EM Set SW22.	
		SW 22-3	SW 22-4
0	No need to cut.	ON	ON
1	Cut only J41.	OFF	ON
2	Cut only J42.	ON	OFF
3 to 9	Cut J41 and J42.	OFF	OFF

2. Installing SIGNAL RECEIVER

- Installation procedure for the standard location

1. Pull out the lead wire of signal receiver from the square hole located in the corner of grille, where the removed corner panel was in the preparation procedure.
2. Pass the lead wire through the 2 hooking portions and inside the control box, and connect it to CN90 on the indoor controller board as shown below.
   Adjust the lead wire length to allow the corner panel to be removed again, and fix it with the cable band.
3. Install the signal receiver by sliding it towards the arrow A, and fix in the corner with the screw.
   (Reuse the screw which was used to fix the removed corner panel.)

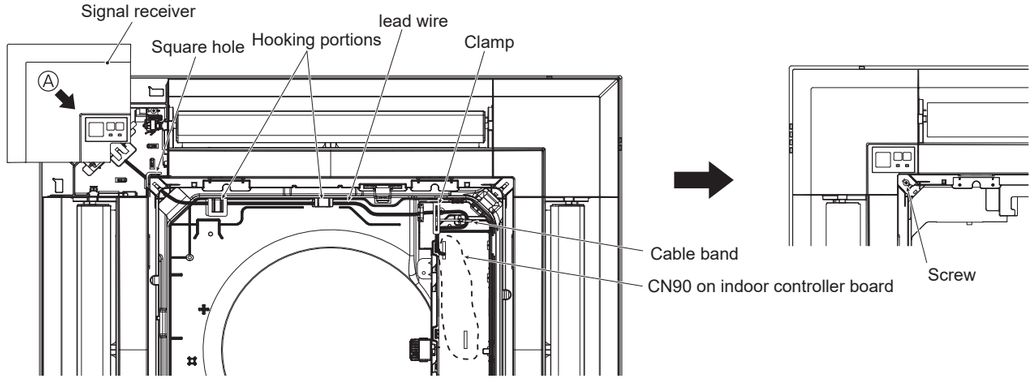

4. After completing the installation, attach the control box cover to the unit as it was.

Continued to the next page

● To install the signal receiver to the 2 locations other than the standard location, follow the procedure below.

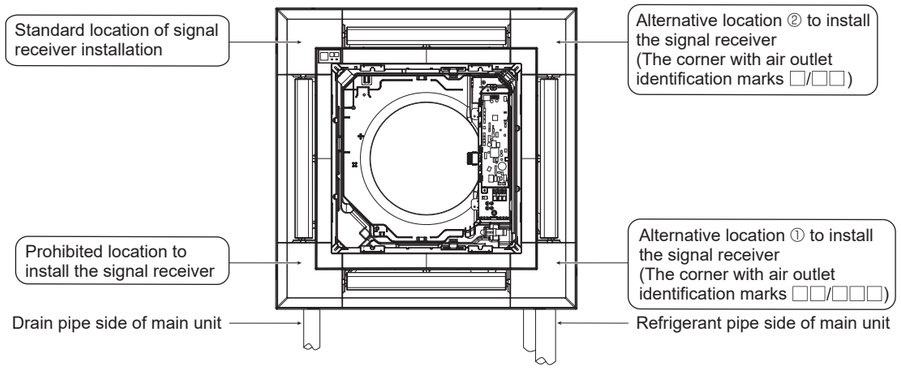

● Installation procedure for the alternative location ①

1. Pass the lead wire of signal receiver through the square hall located in the corner of grille.
2. Loosen the 2 screws fixing the electrical box cover on the unit, and slide the cover to open.
3. Route the lead wire of signal receiver (white, 9 poles) from the electrical box side on the unit, and certainly connect it to CN90 on the indoor controller board.
4. The lead wire of signal receiver must be held together without slack using the clamp into the electrical box.
5. Follow the reverse procedure of 2 to reinstall the electrical box cover on the unit.
6. Install the signal receiver to the grille and fix with the screws.

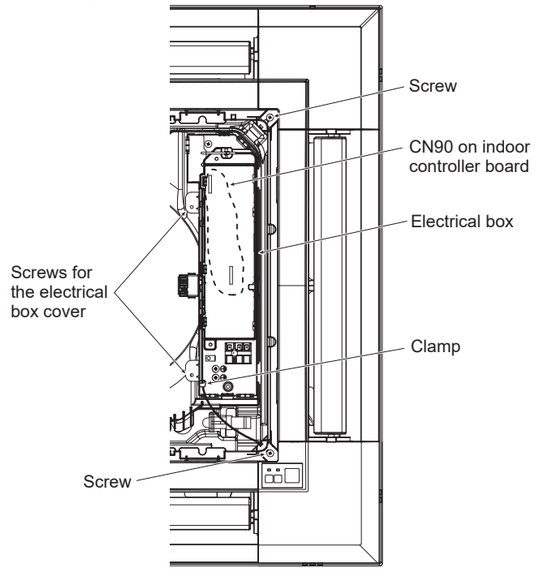

● Installation procedure for the alternative location ②

1. Pass the lead wire of signal receiver through the square hall located in the corner of grille.
2. Loosen the 2 screws fixing the electrical box cover on the unit, and slide the cover to open.
3. Route the lead wire of signal receiver (white, 9 poles) from the electrical box side on the unit, and certainly connect it to CN90 on the indoor controller board.
4. The lead wire of signal receiver must be held together without slack, and fixed with the cable band into the electrical box.
5. Follow the reverse procedure of 2 to reinstall the electrical box cover on the unit.
6. Install the signal receiver to the grille and fix with the screws.

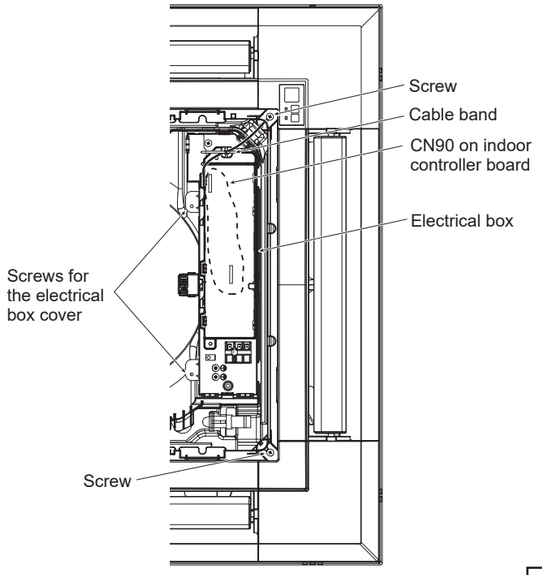

MEMO

MITSUBISHI ELECTRIC CORPORATION
HEAD OFFICE:TOKYO BUILDING.,2-7-3,MARUNOUCHI,CHIYODA-KU,TOKYO 100-8310,JAPAN