American Standard®
HEATING & AIR CONDITIONING

MITSUBISHI ELECTRIC

Revision A:
- NAXWST06/09/12/15/18/24B112AA, NAYWST09/12/15/18/24B112AA, NAXWST30/36C112AA and NAYWST30/36C112AA have been added.

OBHA874 is void.

INDOOR UNIT

No. OBHA874
REVISED EDITION-A

SERVICE MANUAL

Models

NAXWST06B112AA
NAXWST09B112AA
NAXWST12B112AA
NAXWST15B112AA
NAXWST18B112AA
NAXWST24B112AA
NAXWST30B112AA
NAXWST36B112AA
NAXWST30C112AA
NAXWST36C112AA

NAYWST09B112AA
NAYWST12B112AA
NAYWST15B112AA
NAYWST18B112AA
NAYWST24B112AA
NAYWST30B112AA
NAYWST36B112AA
NAYWST30C112AA
NAYWST36C112AA

Outdoor unit service manual
NAXSST/NAYSST•B•AA Series (OBHA875)

NAXWST18B112AA
NAYWST18B112AA

CONTENTS

1. TECHNICAL CHANGES ····· 2
2. PART NAMES AND FUNCTIONS ····· 3
3. SPECIFICATION ····· 7
4. OUTLINES AND DIMENSIONS ····· 10
5. WIRING DIAGRAM ····· 12
6. REFRIGERANT SYSTEM DIAGRAM ····· 15
7. SERVICE FUNCTIONS ····· 17
8. MICROPROCESSOR CONTROL ····· 20
9. TROUBLESHOOTING ····· 34
10. DISASSEMBLY INSTRUCTIONS ····· 59

PARTS CATALOG (OBBA874)

Use the specified refrigerant only

Never use any refrigerant other than that specified.

Doing so may cause a burst, an explosion, or fire when the unit is being used, serviced, or disposed of.
Correct refrigerant is specified in the manuals and on the spec labels provided with our products.
We will not be held responsible for mechanical failure, system malfunction, unit breakdown or accidents caused by failure to follow the instructions.

<Preparation before the repair service>

- Prepare the proper tools.
- Prepare the proper protectors.
- Provide adequate ventilation.
- After stopping the operation of the air conditioner, turn off the power-supply breaker and pull the power plug.
- Discharge the capacitor before the work involving the electric parts.

<Precautions during the repair service>

- Do not perform the work involving the electric parts with wet hands.
- Do not pour water into the electric parts.
- Do not touch the refrigerant.
- Do not touch the hot or cold areas in the refrigeration cycle.
- When the repair or the inspection of the circuit needs to be done without turning off the power, exercise great caution not to touch the live parts.

⚠ WARNING

- **When the refrigeration circuit has a leak, do not execute pump down with the compressor.**
- **When pumping down the refrigerant, stop the compressor before disconnecting the refrigerant pipes. The compressor may burst if air etc. get into it.**
- **When opening or closing the valve below freezing temperatures, refrigerant may spurt out from the gap between the valve stem and the valve body, resulting in injuries.**

Revision A:

- NAXWST06/09/12/15/18/24B112AA, NAYWST09/12/15/18/24B112AA, NAXWST30/36C112AA and NAYWST30/36C112AA have been added.

1 TECHNICAL CHANGES

NAXWST06B112AA
NAXWST09B112AA NAYWST09B112AA
NAXWST12B112AA NAYWST12B112AA
NAXWST15B112AA NAYWST15B112AA
NAXWST18B112AA NAYWST18B112AA
NAXWST24B112AA NAYWST24B112AA
NAXWST30B112AA NAYWST30B112AA
NAXWST36B112AA NAYWST36B112AA

1. New model

NAXWST30B112AA → NAXWST30C112AA
NAYWST30B112AA → NAYWST30C112AA
NAXWST36B112AA → NAXWST36C112AA
NAYWST36B112AA → NAYWST36C112AA

1. Compressor contactor has been added.

2 PART NAMES AND FUNCTIONS

NAXWST06B112AA NAXWST09B112AA NAXWST12B112AA NAXWST15B112AA
NAYWST09B112AA NAYWST12B112AA NAYWST15B112AA

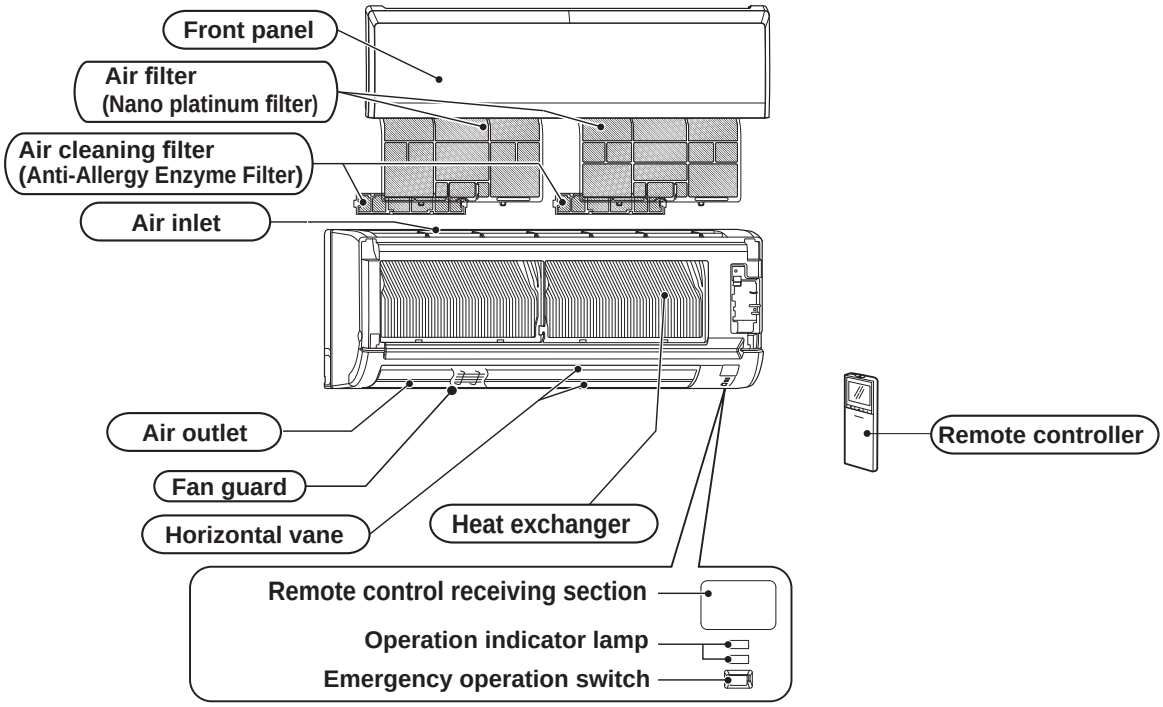

ACCESSORIES

(1)	Installation plate	1
(2)	Attachment screws for the installation plate 4 × 25 mm	5
(3)	Remote controller holder	1
(4)	Screws for (3) 3.5 × 16 mm (Black)	2
(5)	Battery (AAA) for (6)	2
(6)	Wireless remote controller	1
(7)	Felt tape (For left or left-rear piping)	1
(8)	Air cleaning filter	2

NAXWST18B112AA
NAYWST18B112AA

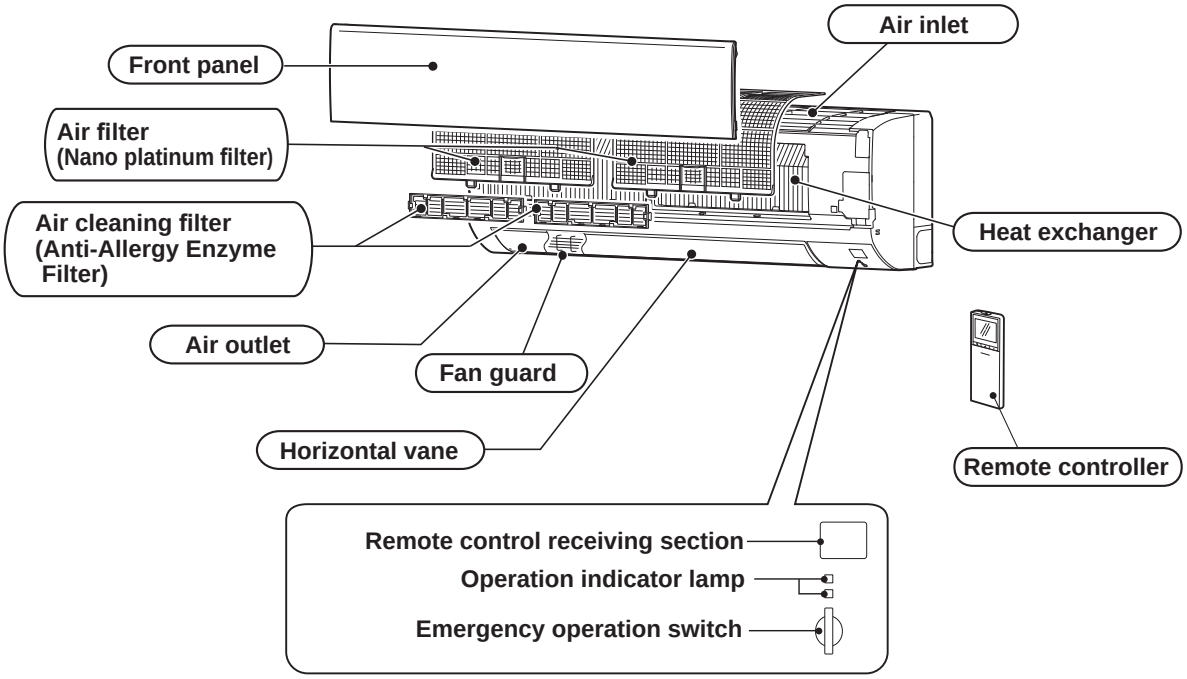

ACCESSORIES

(1)	Installation plate	1
(2)	Installation plate fixing screw 4 × 25 mm	5
(3)	Remote controller holder	1
(4)	Fixing screw for (3) 3.5 × 16 mm (Black)	2
(5)	Battery (AAA) for (6)	2
(6)	Wireless remote controller	1
(7)	Felt tape (Used for left or left-rear piping)	1
(8)	Air cleaning filter	2

NAXWST24B112AA
NAYWST24B112AA

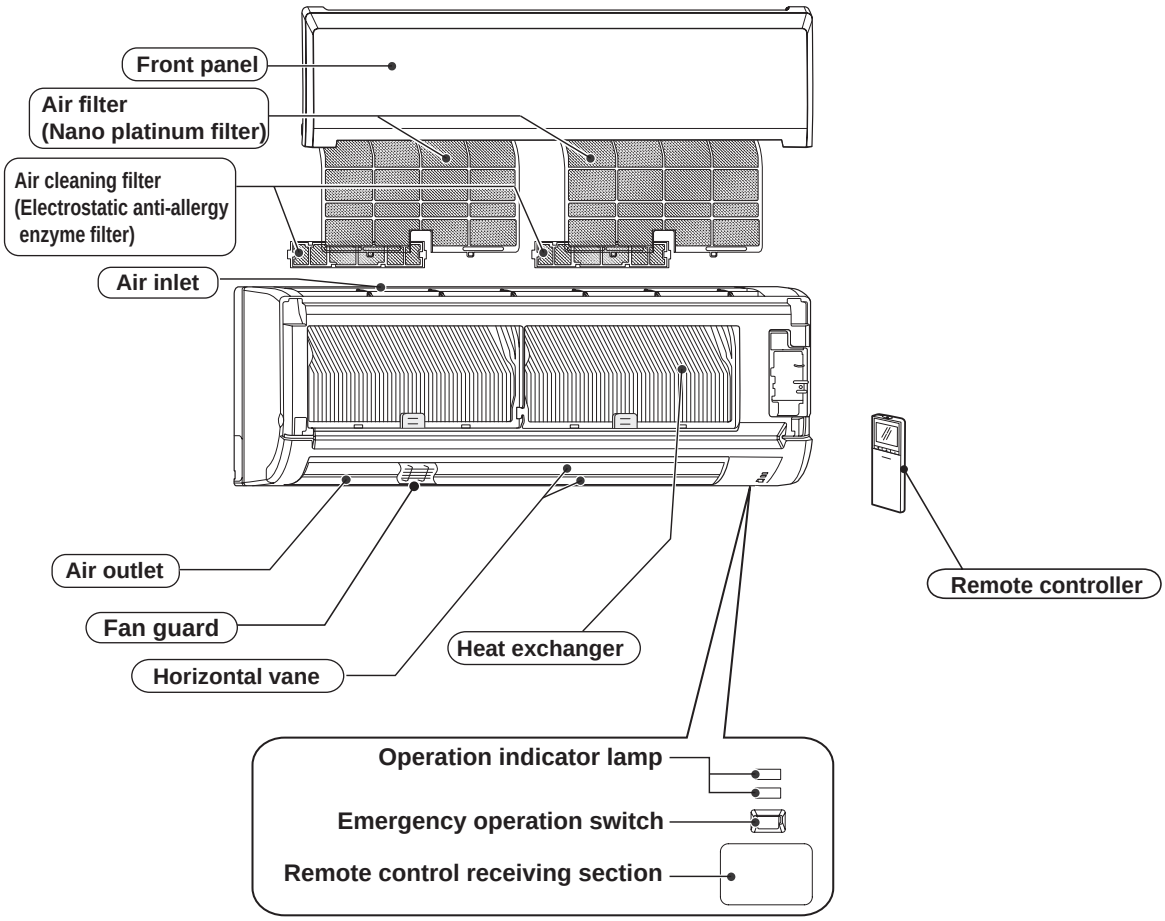

ACCESSORIES

(1)	Installation plate	1
(2)	Installation plate fixing screw 4 × 25 mm	7
(3)	Remote controller holder	1
(4)	Fixing screw for (3) 3.5 × 16 mm (Black)	2
(5)	Battery (AAA) for (6)	2
(6)	Wireless remote controller	1
(7)	Felt tape (Used for left or left-rear piping)	1
(8)	Air cleaning filter	2

NAXWST30B112AA NAXWST36B112AA NAXWST30C112AA NAYWST30C112AA
NAYWST30B112AA NAYWST36B112AA NAXWST36C112AA NAYWST36C112AA

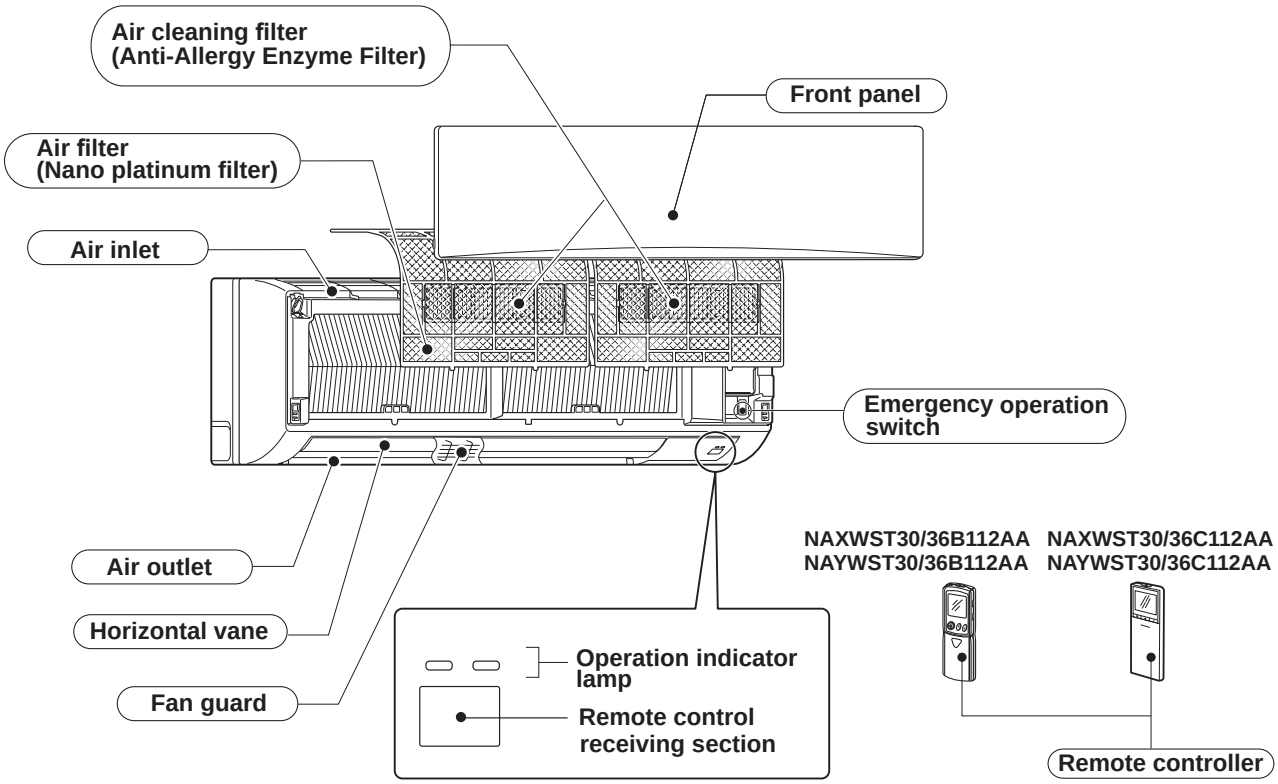

ACCESSORIES

(1)	Installation plate	1
(2)	Attachment screws for the installation plate 4 × 25 mm	7
(3)	Remote controller holder	1
(4)	Screws for (3) 3.5 × 1.6 mm (Black)	2
(5)	Battery (AAA) for (6)	2
(6)	Wireless remote controller	1
(7)	Felt tape (For left or left-rear piping)	2
(8)	Air cleaning filter	2

3 SPECIFICATION

Indoor model			NAXWST06B112AA	NAXWST09B112AA NAYWST09B112AA	NAXWST12B112AA NAYWST12B112AA
Power supply	V, phase, Hz		208/230, 1, 60		
Disconnect switch		A	15		
Min. circuit ampacity		A	1.0		
Fan motor		F.L.A	0.75		
Airflow Super High - High - Med. - Low - Quiet	COOL Dry (Wet)	CFM	381 - 307 - 222 - 160 - 134 (343 - 276 - 200 - 144 - 121)		
	HEAT Dry	CFM	390 - 307 - 222 - 160 - 134		
Moisture removal		pt./h	–	0.4	2.5
Sound level Super High - High - Med. - Low - Quiet	Cooling	dB(A)	43 - 37 - 30 - 22 - 19		45 - 37 - 30 - 22 - 19
	Heating (**NAX**)	dB(A)			43 - 37 - 30 - 22 - 19
Fan speed Super High - High - Med. - Low - Quiet	Cooling	rpm	1,020 - 860 - 670 - 530 - 470		
	Heating (**NAX**)	rpm	1,040 - 860 - 670 - 530 - 470		
Cond. drain connection O.D.		in.	5/8		
Dimensions	W	in.	31-7/16		
	D		9-1/8		
	H		11-5/8		
Weight		lb.	23		
External finish			Munsell 1.0Y 9.2/0.2		
Remote controller			Wireless type		
Control voltage (by built-in transformer)			12 - 24 V DC		

Indoor model			NAXWST15B112AA NAYWST15B112AA	NAXWST18B112AA NAYWST18B112AA	NAXWST24B112AA NAYWST24B112AA
Power supply	V, phase, Hz		208/230, 1, 60		
Disconnect switch		A	15		
Min. circuit ampacity		A	1.0		
Fan motor		F.L.A	0.75	0.74	0.73
Airflow Super High - High - Med. - Low - Quiet (**WST15/18**) Super High - High - Med. - Low (**WST24**)	COOL Dry (Wet)	CFM	504 - 400 - 316 - 253 - 191 (454 - 360 - 285 - 228 - 172)	629 - 511 - 407 - 325 - 250 (566 - 460 - 367 - 292 - 225)	701 - 565 - 456 - 361 (631 - 509 - 410 - 325)
	HEAT Dry (**NAX**)	CFM	437 - 348 - 285 - 231 - 191	629 - 550 - 459 - 375 - 287	701 - 565 - 456 - 336
Moisture removal		pt./h	2.5	3.8	5.1
Sound level Super High - High - Med. - Low - Quiet (**WST15/18**) Super High - High - Med. - Low (**WST24**)	Cooling	dB(A)	49 - 44 - 38 - 32 - 26	49 - 44 - 38 - 33 - 28	53 - 47 - 41 - 34
	Heating (**NAX**)	dB(A)	46 - 40 - 35 - 30 - 26	48 - 43 - 39 - 34 - 28	52 - 47 - 41 - 32
Fan speed Super High - High - Med. - Low - Quiet (**WST15/18**) Super High - High - Med. - Low (**WST24**)	Cooling	rpm	1,280 - 1,060 - 880 - 740 - 600	1,170 - 990 - 830 - 700 - 580	1,300 - 1,090 - 920 - 770
	Heating (**NAX**)	rpm	1,140 - 950 - 810 - 690 - 600	1,170 - 1,050 - 910 - 780 - 640	1,300 - 1,090 - 920 - 730
Cond. drain connection O.D.		in.	5/8		
Dimensions	W	in.	31-7/16	36-5/16	43-5/16
	D		9-1/8	9-13/16	9-3/8
	H		11-5/8	12	12-13/16
Weight		lb.	23	28	37
External finish			Munsell 1.0Y 9.2/0.2		
Remote controller			Wireless type		
Control voltage (by built-in transformer)			12 - 24 V DC		

NOTE: Test conditions are based on AHRI 210/240.

Model			NAXWST30B112AA NAXWST30C112AA	NAYWST30B112AA NAYWST30C112AA	NAXWST36B112AA NAXWST36C112AA	NAYWST36B112AA NAYWST36C112AA
Power supply	V, phase, Hz		208/230 , 1 , 60			
Disconnect switch		A	15			
Min. circuit ampacity		A	1.0			
Fan motor		F.L.A	0.76			
Airflow Super High - High - Med. - Low	COOL Dry (Wet)	CFM	915 - 699 - 602 - 374 (823 - 629 - 542 - 336)		932-710-613-379 (839-639-552-341)	
	HEAT Dry		803 - 699 - 602 - 423		816-710-613-431	
Moisture removal		pt./h	7.8		9.3	
Sound level Super High - High - Med. - Low	Cooling	dB(A)	53 - 49 - 42 - 32			
	Heating (**NAX**)		50 - 49 - 42 - 34	—	50 - 49 - 42 - 34	—
Cond. drain connection O.D.		in.	5/8			
Dimensions	W	in.	46-1/16			
	D		11-5/8			
	H		14-3/8			
Weight		lb.	45			
External finish			Munsell 1.0Y 9.2/0.2			
Remote controller			Wireless type			
Control voltage (by built-in transformer)			12-24 V DC			

NOTE : Test conditions are based on AHRI 210/240.

3-1. OPERATING RANGE

(1) POWER SUPPLY

	Rated voltage	Guaranteed voltage (V)
Indoor unit	208/230 V 1 phase 60 Hz	Min. 187 208 230 Max. 253

(2) OPERATION

Mode	Condition	Intake air temperature (°F)	
		DB	WB
Cooling	Standard temperature	80	67
	Maximum temperature	90	73
	Minimum temperature	67	57
	Maximum humidity	78%	
Heating	Standard temperature	70	60
	Maximum temperature	80	67
	Minimum temperature	70	60

3-2. OUTLET AIR SPEED AND COVERAGE RANGE

Model	Mode	Function	Airflow (CFM)	Air speed (ft./sec.)	Coverage range (ft.)
NAXWST06B112AA **NAXWST09B112AA** **NAYWST09B112AA** **NAXWST12B112AA** **NAYWST12B112AA**	HEAT (**NAX**)	Dry	390	19.8	28.4
	COOL	Dry	381	19.3	27.7
		Wet	343	17.4	25.0
NAXWST15B112AA **NAYWST15B112AA**	HEAT (**NAX**)	Dry	437	22.2	31.7
	COOL	Dry	504	25.6	36.4
		Wet	454	23.0	32.9
NAXWST18B112AA **NAYWST18B112AA**	HEAT (**NAX**)	Dry	629	28.7	42.8
	COOL	Dry	629	28.7	42.8
		Wet	566	25.8	38.7
NAXWST24B112AA **NAYWST24B112AA**	HEAT (**NAX**)	Dry	701	17.1	35.1
	COOL	Dry	701	17.1	35.1
		Wet	631	15.4	31.7
NAXWST30B112AA **NAXWST36B112AA** **NAYWST30B112AA** **NAYWST36B112AA**	HEAT (**NAX**)	Dry	803	15.1	35.3
	COOL	Dry	915	17.2	40.0
		Wet	823	15.4	36.1
NAXWST30C112AA **NAXWST36C112AA** **NAYWST30C112AA** **NAYWST36C112AA**	HEAT (**NAX**)	Dry	816	15.3	35.8
	COOL	Dry	932	17.5	40.8
		Wet	839	15.7	36.8

- The air coverage range is the figure up to the position where the air speed is 1 ft./sec., when air is blown out horizontally from the unit properly at the High speed position.
  The coverage range should be used only as a general guideline since it varies according to the size of the room and furniture arranged inside the room.

4 OUTLINES AND DIMENSIONS

NAXWST06B112AA NAXWST09B112AA NAXWST12B112AA NAXWST15B112AA NAYWST09B112AA NAYWST12B112AA NAYWST15B112AA

Unit: inch

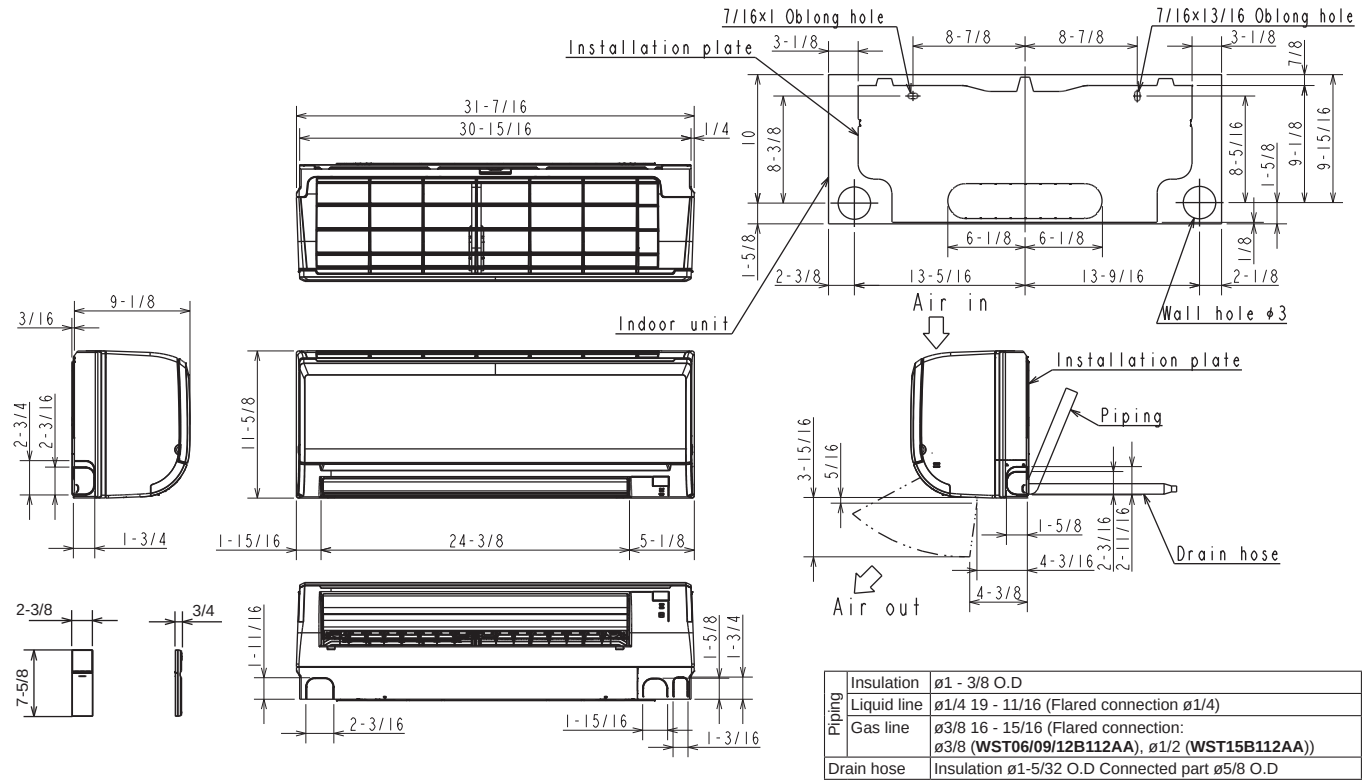

Piping	Insulation	ø1 - 3/8 O.D
	Liquid line	ø1/4 19 - 11/16 (Flared connection ø1/4)
	Gas line	ø3/8 16 - 15/16 (Flared connection: ø3/8 (**WST06/09/12B112AA**), ø1/2 (**WST15B112AA**))
Drain hose		Insulation ø1-5/32 O.D Connected part ø5/8 O.D

NAXWST18B112AA NAYWST18B112AA

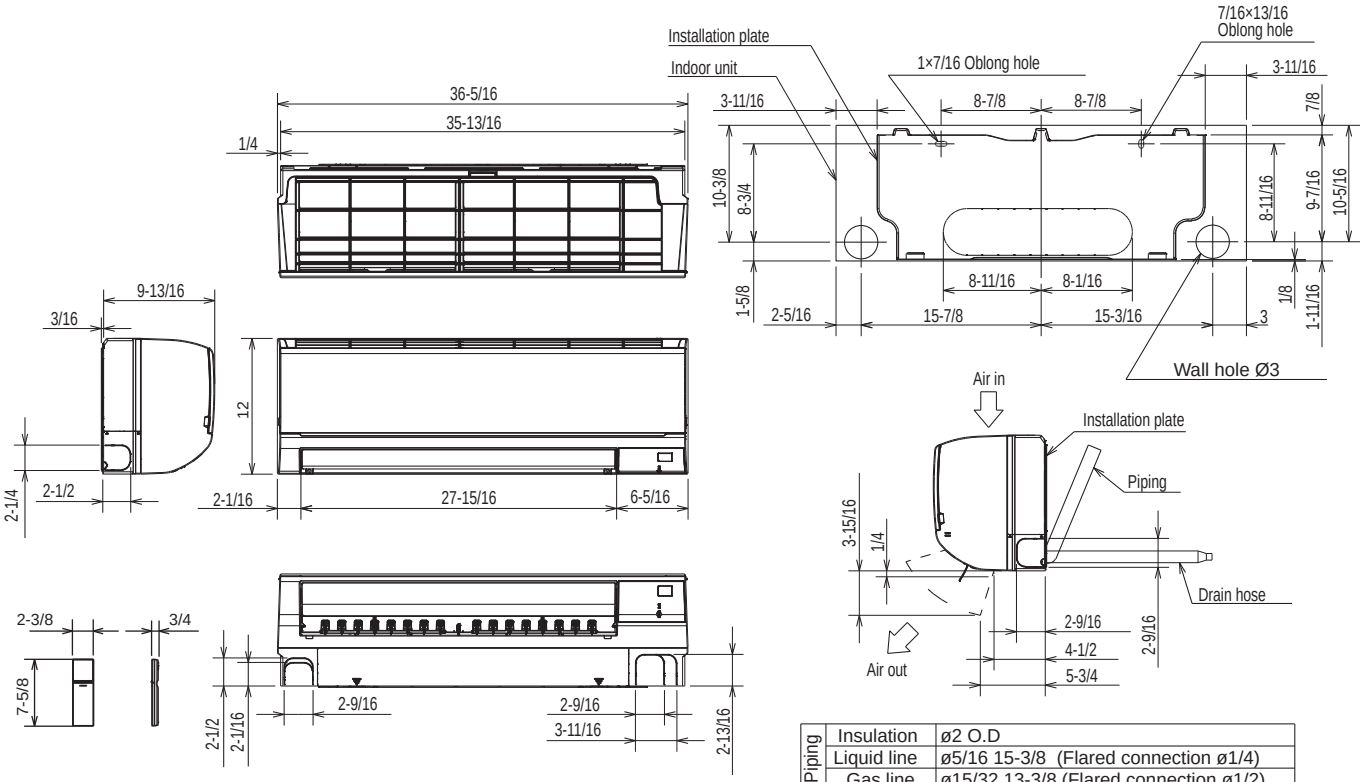

Piping	Insulation	ø2 O.D
	Liquid line	ø5/16 15-3/8 (Flared connection ø1/4)
	Gas line	ø15/32 13-3/8 (Flared connection ø1/2)
Drain hose		Insulation ø1-5/32 Connected part ø5/8 O.D

NAXWST24B112AA
NAYWST24B112AA

Unit: inch

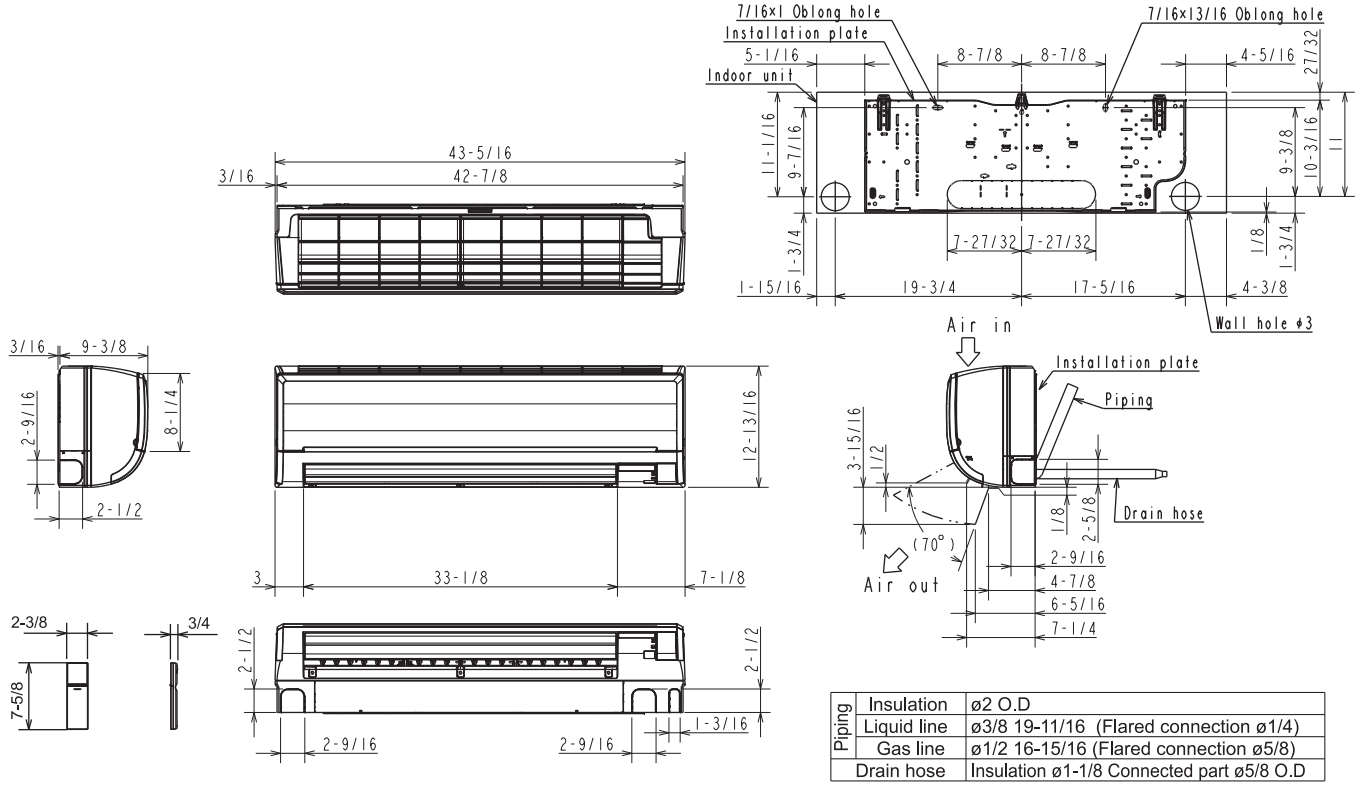

Piping	Insulation	ø2 O.D
	Liquid line	ø3/8 19-11/16 (Flared connection ø1/4)
	Gas line	ø1/2 16-15/16 (Flared connection ø5/8)
Drain hose		Insulation ø1-1/8 Connected part ø5/8 O.D

NAXWST30B112AA NAXWST36B112AA NAXWST30C112AA NAYWST30C112AA
NAYWST30B112AA NAYWST36B112AA NAXWST36C112AA NAYWST36C112AA

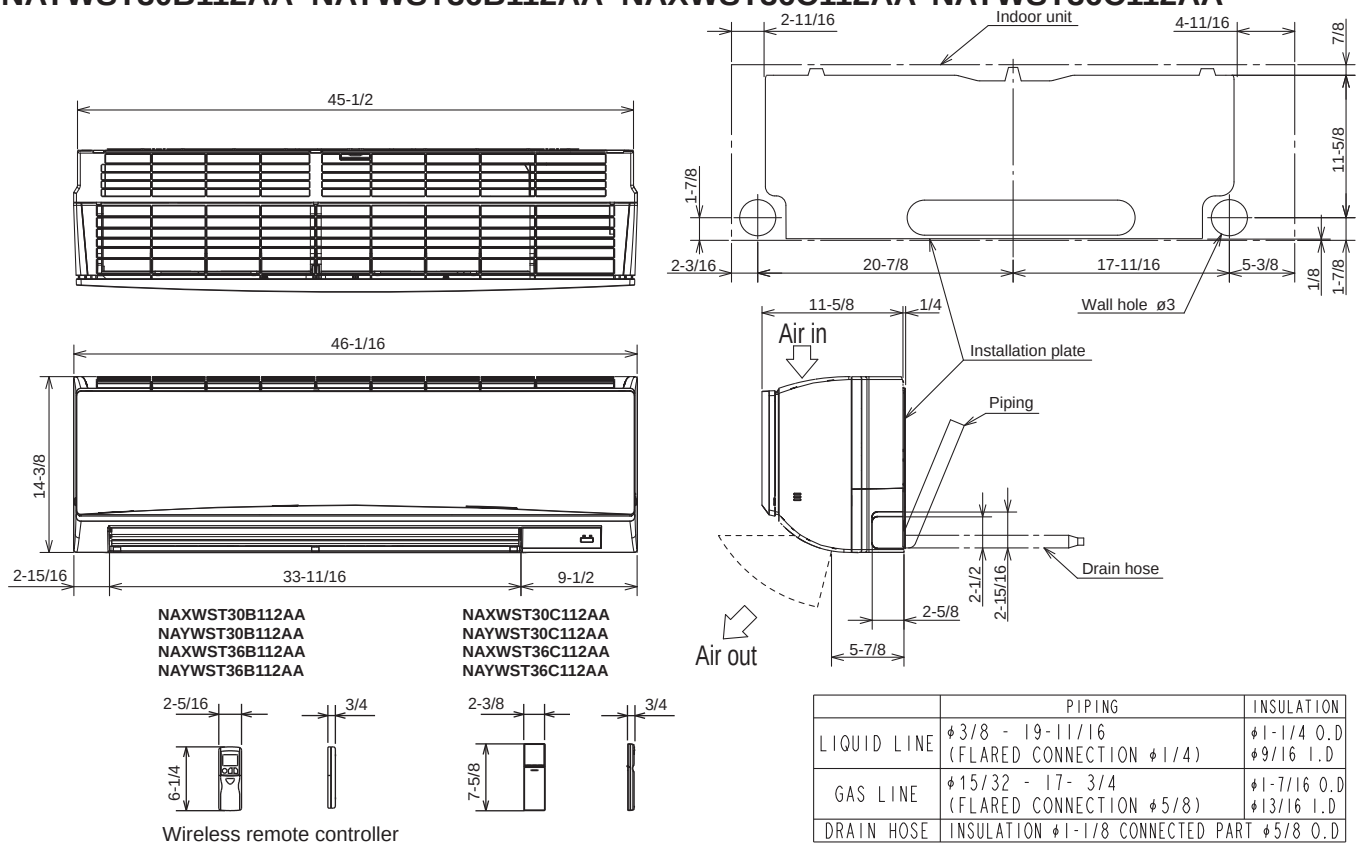

	PIPING	INSULATION
LIQUID LINE	ϕ3/8 - 19-11/16 (FLARED CONNECTION ϕ1/4)	ϕ1-1/4 O.D ϕ9/16 I.D
GAS LINE	ϕ15/32 - 17- 3/4 (FLARED CONNECTION ϕ5/8)	ϕ1-7/16 O.D ϕ13/16 I.D
DRAIN HOSE	INSULATION ϕ1-1/8 CONNECTED PART ϕ5/8 O.D	

5 WIRING DIAGRAM

NAXWST06B112AA NAXWST09B112AA NAXWST12B112AA NAXWST15B112AA NAYWST09B112AA NAYWST12B112AA NAYWST15B112AA

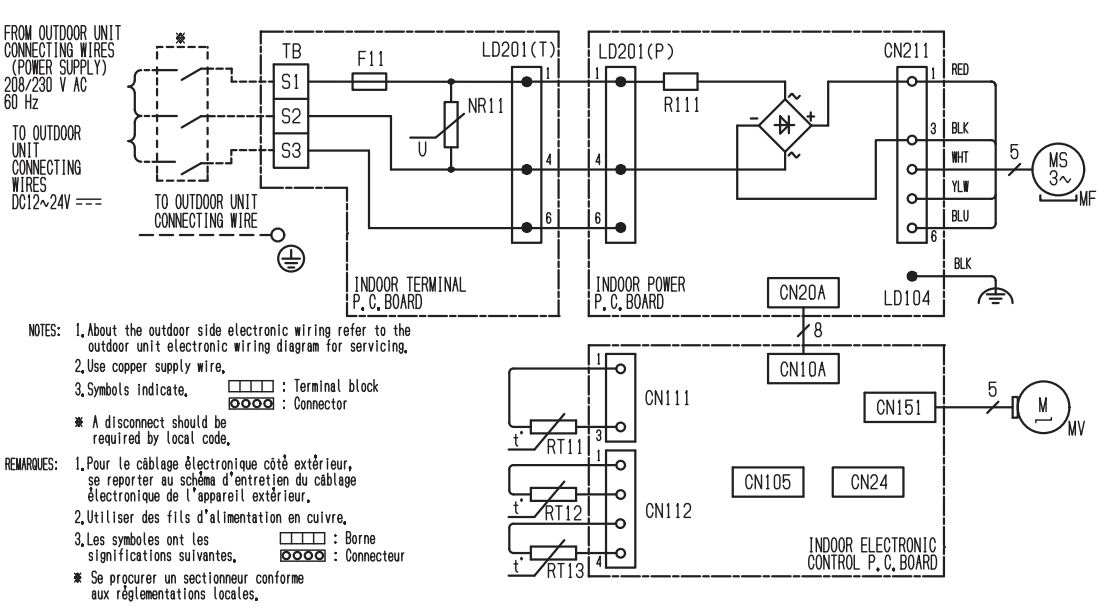

NOTES: 1. About the outdoor side electronic wiring refer to the outdoor unit electronic wiring diagram for servicing.
2. Use copper supply wire.
3. Symbols indicate. ☐☐☐☐ : Terminal block ⊙⊙⊙⊙ : Connector
※ A disconnect should be required by local code.

REMARQUES: 1. Pour le câblage électronique côté extérieur, se reporter au schéma d'entretien du câblage électronique de l'appareil extérieur.
2. Utiliser des fils d'alimentation en cuivre.
3. Les symboles ont les significations suivantes. ☐☐☐☐ : Borne ⊙⊙⊙⊙ : Connecteur
※ Se procurer un sectionneur conforme aux réglementations locales.

SYMBOL	NAME
F11	FUSE (T3.15AL250V)
MF	FAN MOTOR
MV	VANE MOTOR (HORIZONTAL)
NR11	VARISTOR
R111	RESISTOR
RT11	ROOM TEMP. THERMISTOR
RT12	COIL TEMP. THERMISTOR(MAIN)
RT13	COIL TEMP. THERMISTOR(SUB)
TB	TERMINAL BLOCK

NAXWST18B112AA NAYWST18B112AA

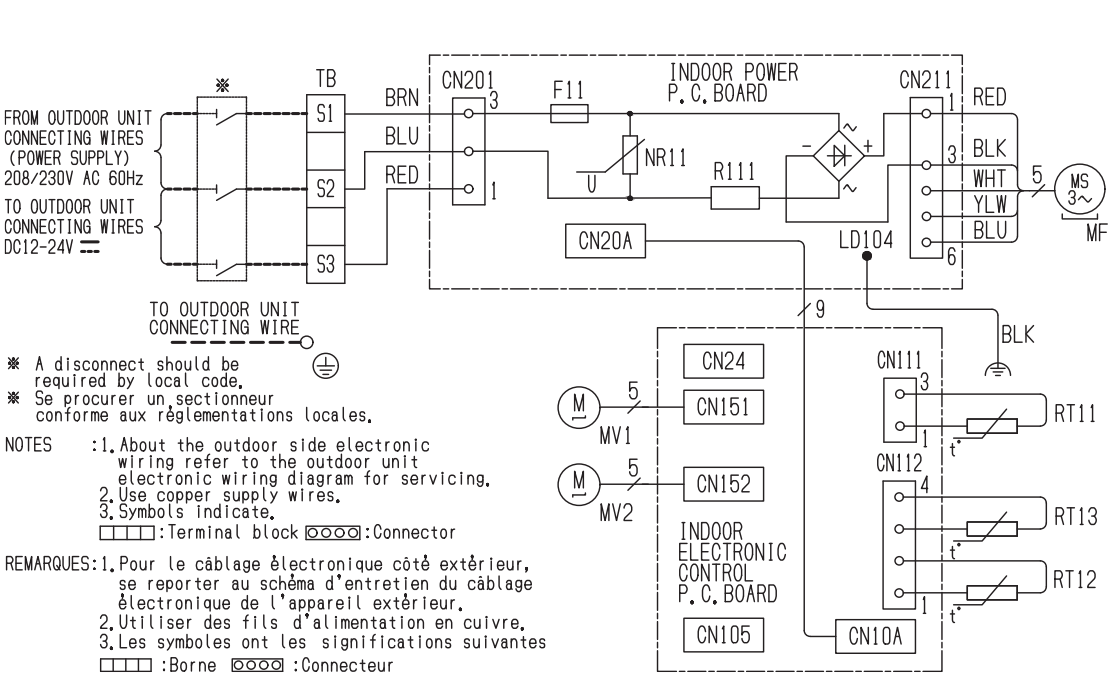

※ A disconnect should be required by local code.
※ Se procurer un sectionneur conforme aux réglementations locales.

NOTES :1. About the outdoor side electronic wiring refer to the outdoor unit electronic wiring diagram for servicing.
2. Use copper supply wires.
3. Symbols indicate.
☐☐☐☐ :Terminal block ⊙⊙⊙⊙ :Connector

REMARQUES: 1. Pour le câblage électronique côté extérieur, se reporter au schéma d'entretien du câblage électronique de l'appareil extérieur.
2. Utiliser des fils d'alimentation en cuivre.
3. Les symboles ont les significations suivantes
☐☐☐☐ :Borne ⊙⊙⊙⊙ :Connecteur

SYMBOL	NAME
F11	FUSE (T3.15AL250V)
MF	FAN MOTOR
MV1	VANE MOTOR (HORIZONTAL)
MV2	VANE MOTOR (VERTICAL)
NR11	VARISTOR
R111	RESISTOR
RT11	ROOM TEMP. THERMISTOR
RT12	COIL TEMP. THERMISTOR (MAIN)
RT13	COIL TEMP. THERMISTOR (SUB)
TB	TERMINAL BLOCK

NAXWST24B112AA
NAYWST24B112AA

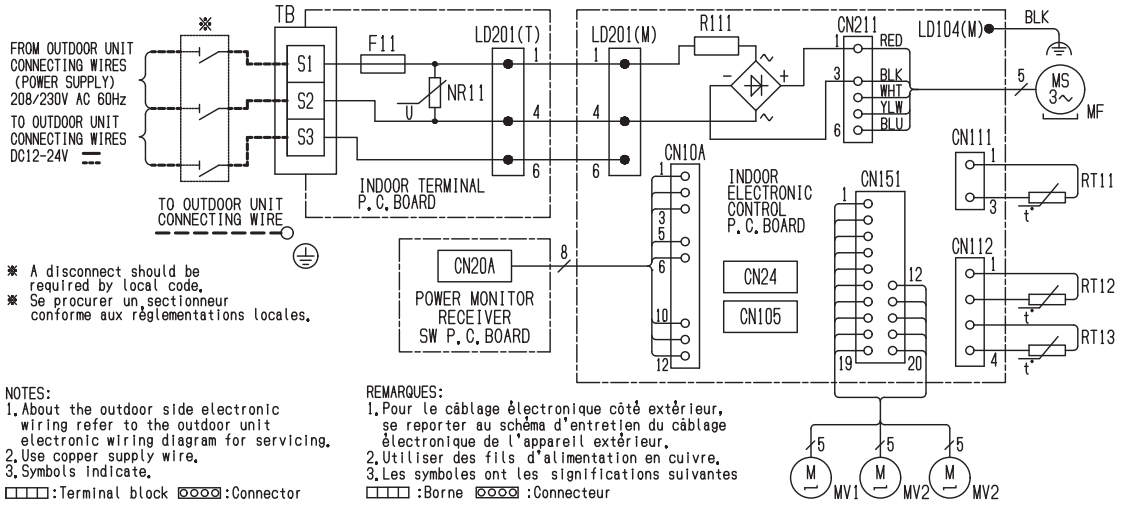

SYMBOL	NAME
F11	FUSE (T3.15AL250V)
MF	FAN MOTOR
MV1	VANE MOTOR (HORIZONTAL)
MV2	VANE MOTOR (VERTICAL)
NR11	VARISTOR
R111	RESISTOR
RT11	ROOM TEMP. THERMISTOR
RT12	COIL TEMP. THERMISTOR (MAIN)
RT13	COIL TEMP. THERMISTOR (SUB)
TB	TERMINAL BLOCK

NOTES:
1. About the outdoor side electronic wiring refer to the outdoor unit electronic wiring diagram for servicing.
2. Use copper supply wire.
3. Symbols indicate.
□□□□:Terminal block ⊡⊡⊡⊡:Connector

REMARQUES:
1. Pour le câblage électronique côté extérieur, se reporter au schéma d'entretien du câblage électronique de l'appareil extérieur.
2. Utiliser des fils d'alimentation en cuivre.
3. Les symboles ont les significations suivantes
□□□□ :Borne ⊡⊡⊡⊡ :Connecteur

NAXWST30B112AA NAXWST36B112AA
NAYWST30B112AA NAYWST36B112AA

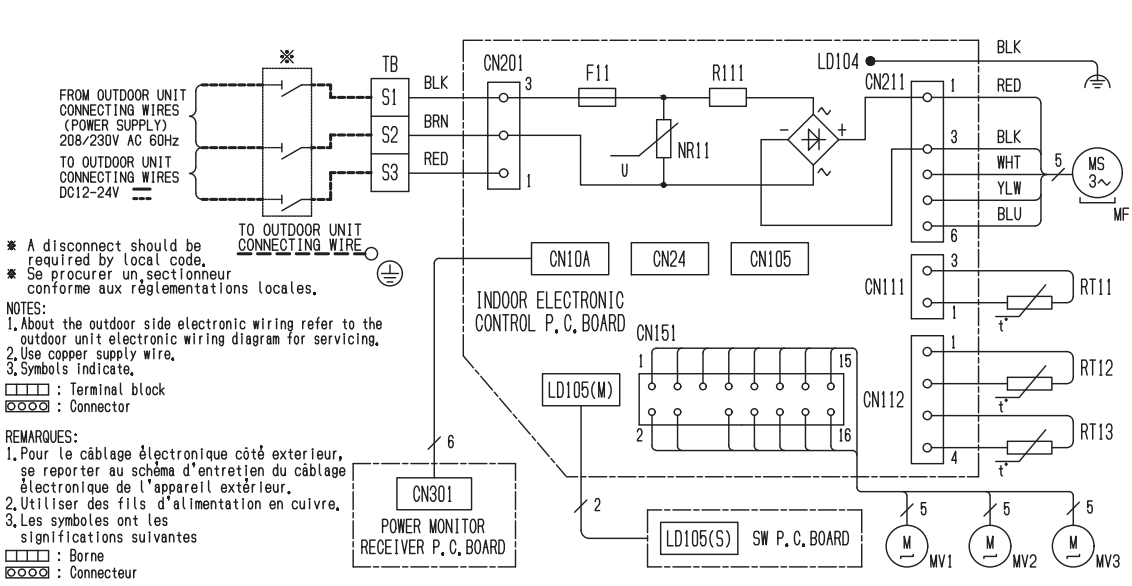

SYMBOL	NAME
F11	FUSE (T3.15AL250V)
MF	FAN MOTOR
MV1	VANE MOTOR (HORIZONTAL)
MV2	VANE MOTOR (VERTICAL RIGHT)
MV3	VANE MOTOR (VERTICAL LEFT)
NR11	VARISTOR
R111	RESISTOR
RT11	ROOM TEMP. THERMISTOR
RT12	COIL TEMP. THERMISTOR (MAIN)
RT13	COIL TEMP. THERMISTOR (SUB)
TB	TERMINAL BLOCK

NOTES:
1. About the outdoor side electronic wiring refer to the outdoor unit electronic wiring diagram for servicing.
2. Use copper supply wire.
3. Symbols indicate.
□□□□ : Terminal block
⊡⊡⊡⊡ : Connector

REMARQUES:
1. Pour le câblage électronique côté exterieur, se reporter au schéma d'entretien du câblage électronique de l'appareil extérieur.
2. Utiliser des fils d'alimentation en cuivre.
3. Les symboles ont les significations suivantes
□□□□ : Borne
⊡⊡⊡⊡ : Connecteur

NAXWST30C112AA NAYWST30C112AA
NAXWST36C112AA NAYWST36C112AA

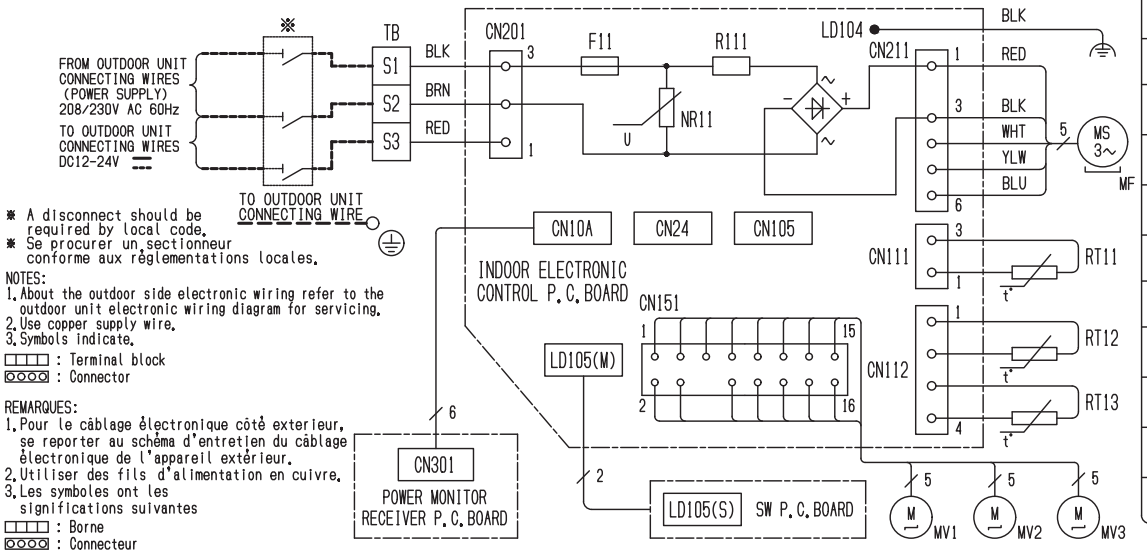

※ A disconnect should be required by local code.
※ Se procurer un sectionneur conforme aux règlementations locales.

NOTES:
1. About the outdoor side electronic wiring refer to the outdoor unit electronic wiring diagram for servicing.
2. Use copper supply wire.
3. Symbols indicate.
□□□□ : Terminal block
○○○○ : Connector

REMARQUES:
1. Pour le câblage électronique côté exterieur, se reporter au schéma d'entretien du câblage électronique de l'appareil extérieur.
2. Utiliser des fils d'alimentation en cuivre.
3. Les symboles ont les significations suivantes
□□□□ : Borne
○○○○ : Connecteur

SYMBOL	NAME
F11	FUSE (T3.15AL250V)
MF	FAN MOTOR
MV1	VANE MOTOR (HORIZONTAL)
MV2	VANE MOTOR (VERTICAL RIGHT)
MV3	VANE MOTOR (VERTICAL LEFT)
NR11	VARISTOR
R111	RESISTOR
RT11	ROOM TEMP. THERMISTOR
RT12	COIL TEMP. THERMISTOR (MAIN)
RT13	COIL TEMP. THERMISTOR (SUB)
TB	TERMINAL BLOCK

6 REFRIGERANT SYSTEM DIAGRAM

NAXWST06B112AA NAXWST09B112AA NAXWST12B112AA NAXWST15B112AA NAYWST09B112AA NAYWST12B112AA NAYWST15B112AA

Unit: inch (mm)

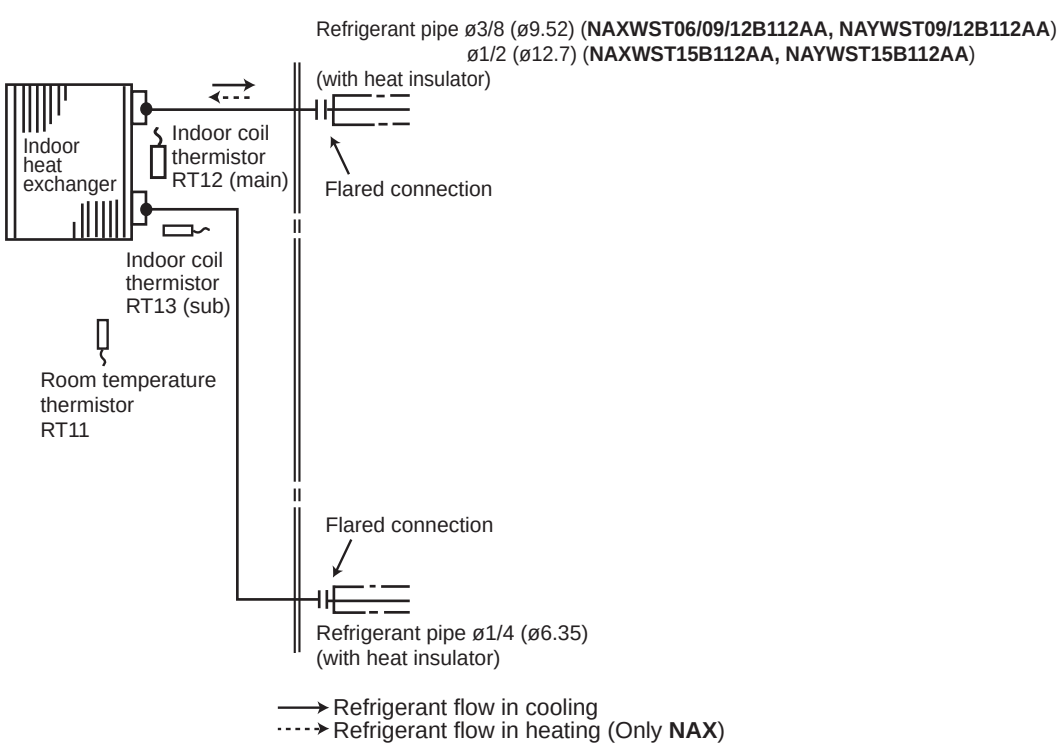

NAXWST18B112AA NAYWST18B112AA

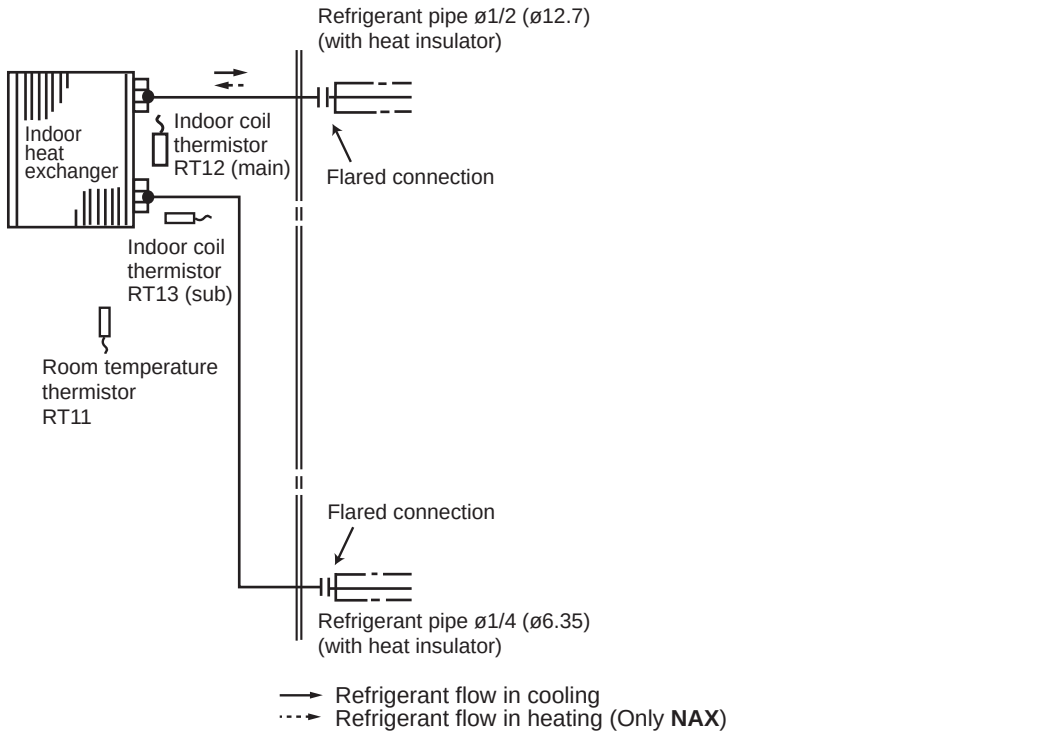

NAXWST24B112AA
NAYWST24B112AA

Unit : inch (mm)

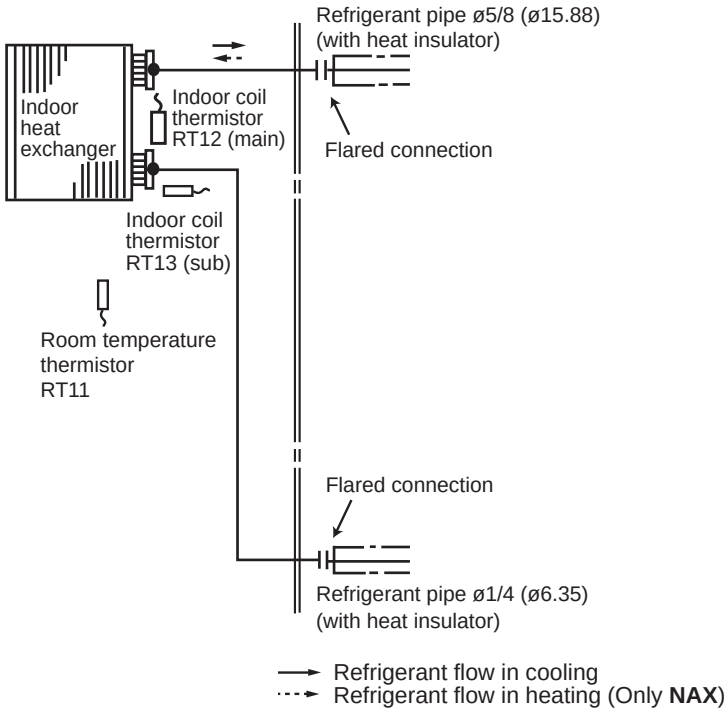

NAXWST30B112AA NAXWST36B112AA NAXWST30C112AA NAYWST30C112AA
NAYWST30B112AA NAYWST36B112AA NAXWST36C112AA NAYWST36C112AA

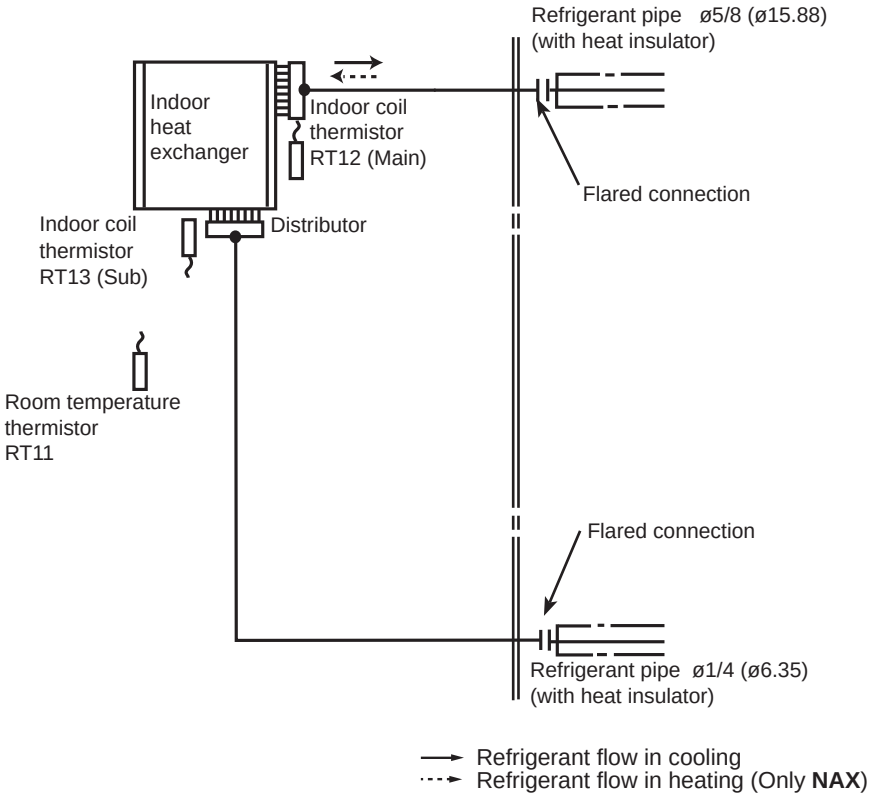

7 SERVICE FUNCTIONS

NAXWST06B112AA NAXWST09B112AA NAXWST12B112AA NAXWST15B112AA NAXWST18B112AA NAXWST24B112AA NAXWST30B112AA NAXWST36B112AA NAXWST30C112AA NAXWST36C112AA
NAYWST09B112AA NAYWST12B112AA NAYWST15B112AA NAYWST18B112AA NAYWST24B112AA NAYWST30B112AA NAYWST36B112AA NAYWST30C112AA NAYWST36C112AA

7-1. TIMER SHORT MODE

For service, the following set time can be shortened by bridging the timer short mode point on the electronic control P.C. board. The time will be shortened as follows. (Refer to 9-7.)
Set time : 1-minute ➔ 1-second
Set time : 3-minute ➔ 3-second (It takes 3 minutes for the compressor to start operation. However, the starting time is shortened by short circuit-of the timer short mode point.)

7-2. HOW TO SET REMOTE CONTROLLER EXCLUSIVELY FOR A PARTICULAR INDOOR UNIT

A maximum of 4 indoor units with wireless remote controllers can be used in a room.

NAXWST30/36B112AA NAYWST30/36B112AA

To operate each indoor unit individually by each remote controller, P.C. boards of remote controller must be modified according to the number of the indoor unit.

How to modify the remote controller P.C. board

Remove batteries before modification.
The board has a print as shown below:

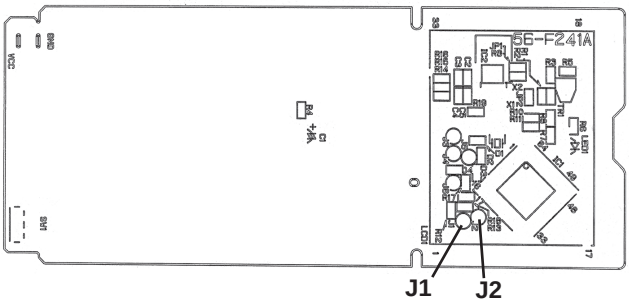

NOTE : For modification, take out the batteries and press the OFF/ON (stop/operate) button twice or 3 times at first. After finish modification, put back the batteries then press the RESET button.

The P.C. board has the print “J1” and “J2”. Solder “J1” and “J2” according to the number of indoor unit as shown in Table 1. After modification, press the RESET button.

Table 1

	1 unit operation	2 units operation	3 units operation	4 units operation
No. 1 unit	No modification	Same as at left	Same as at left	Same as at left
No. 2 unit	—	Solder J1	Same as at left	Same as at left
No. 3 unit	—	—	Solder J2	Same as at left
No. 4 unit	—	—	—	Solder both J1 and J2

How to set the remote controller exclusively for particular indoor unit
After you turn the breaker ON, the first remote controller that sends the signal to the indoor unit will be regarded as the remote controller for the indoor unit.
The indoor unit will only accept the signal from the remote controller that has been assigned to the indoor unit once they are set.
The setting will be cancelled if the breaker is turned OFF, or the power supply is shut down.
Please conduct the above setting once again after the power has been restored.

NAXWST06B112AA NAXWST09B112AA NAXWST12B112AA NAXWST15B112AA NAXWST18B112AA NAXWST24B112AA NAXWST30C112AA NAXWST36C112AA NAYWST09B112AA NAYWST12B112AA NAYWST15B112AA NAYWST18B112AA NAYWST24B112AA NAYWST30C112AA NAYWST36C112AA

To operate the indoor units individually with each remote controller, assign a number to each remote controller according to the number of the indoor unit.

This setting can be set only when all the following conditions are met:
• The remote controller is powered OFF.
• Weekly timer is not set.
• Weekly timer is not being edited.

(1) Hold down [1~4] button on the remote controller for 2 seconds to enter the pairing mode.
(2) Press [1~4] button again and assign a number to each remote controller.
Each press of [1~4] button advances the number in the following order: 1 → 2 → 3 → 4.
(3) Press [EDIT/SEND SET] button to complete the pairing setting.

After you turn the breaker ON, the remote controller that first sends a signal to an indoor unit will be regarded as the remote controller for the indoor unit.
Once they are set, the indoor unit will only receive the signal from the assigned remote controller afterwards.

7-3. AUTO RESTART FUNCTION

When the indoor unit is controlled with the remote controller, the operation mode, the set temperature, and the fan speed are memorized by the indoor electronic control P.C. board. “AUTO RESTART FUNCTION” automatically starts operation in the same mode just before the shutoff of the main power.

Operation

① If the main power has been cut, the operation settings remain.
② After the power is restored, the unit restarts automatically according to the memory.
(However, it takes at least 3 minutes for the compressor to start running.)

How to disable “AUTO RESTART FUNCTION”

① Turn OFF the main power of the unit.
② Cut the Jumper wire JR77 on the indoor electronic control P.C. board. **(WST06/09/12/15/18/24/30/36B112AA)** (Refer to 9-7.)

NAXWST06/09/12/15B112AA
NAYWST09/12/15B112AA

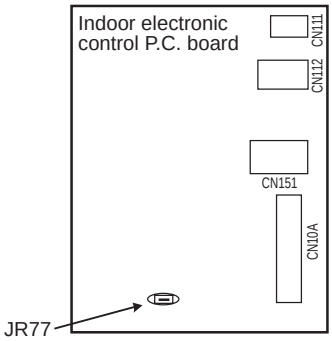

NAXWST18B112AA
NAYWST18B112AA

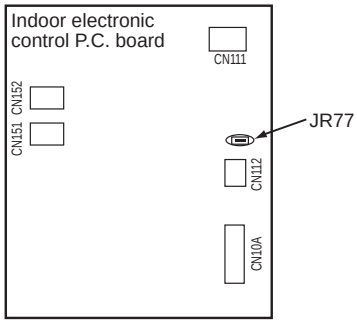

NAXWST24B112AA
NAYWST24B112AA

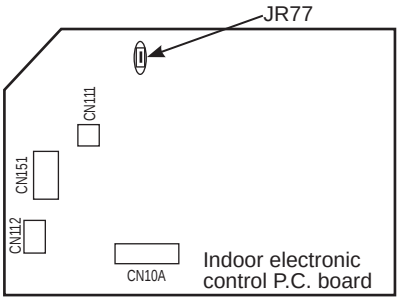

NAXWST30/36B112AA NAXWST30/36C112AA
NAYWST30/36B112AA NAYWST30/36C112AA

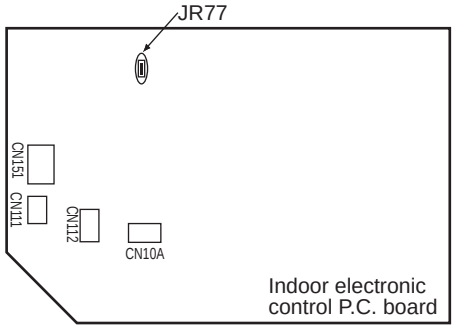

NOTE:

- The operation settings are memorized when 10 seconds have passed after the indoor unit was operated with the remote controller.
- If main power is turned OFF or a power failure occurs while AUTO START/STOP timer is active, the timer setting is cancelled.
- If the unit has been turned OFF with the remote controller before power failure, the auto restart function does not work as the power button of the remote controller is OFF.
- To prevent the breaker from tripping OFF due to the rush of starting current, systematize other home appliance not to turn ON at the same time.
- When some air conditioners are connected to the same supply system, if they are operated before power failure, the starting current of all the compressors may flow simultaneously at restart.
  Therefore, the special counter-measures are required to prevent the main voltage-drop or the rush of the starting current by adding to the system that allows the units to start one by one.

8 MICROPROCESSOR CONTROL

NAXWST06B112AA NAXWST09B112AA NAXWST12B112AA NAXWST15B112AA NAXWST18B112AA NAXWST24B112AA NAXWST30B112AA NAXWST36B112AA NAXWST30C112AA NAXWST36C112AA
NAYWST09B112AA NAYWST12B112AA NAYWST15B112AA NAYWST18B112AA NAYWST24B112AA NAYWST30B112AA NAYWST36B112AA NAYWST30C112AA NAYWST36C112AA

WIRELESS REMOTE CONTROLLER

These pictures show NAX type.

NAXWST06B112AA NAXWST09B112AA NAXWST12B112AA NAXWST15B112AA NAYWST09B112AA NAYWST12B112AA NAYWST15B112AA

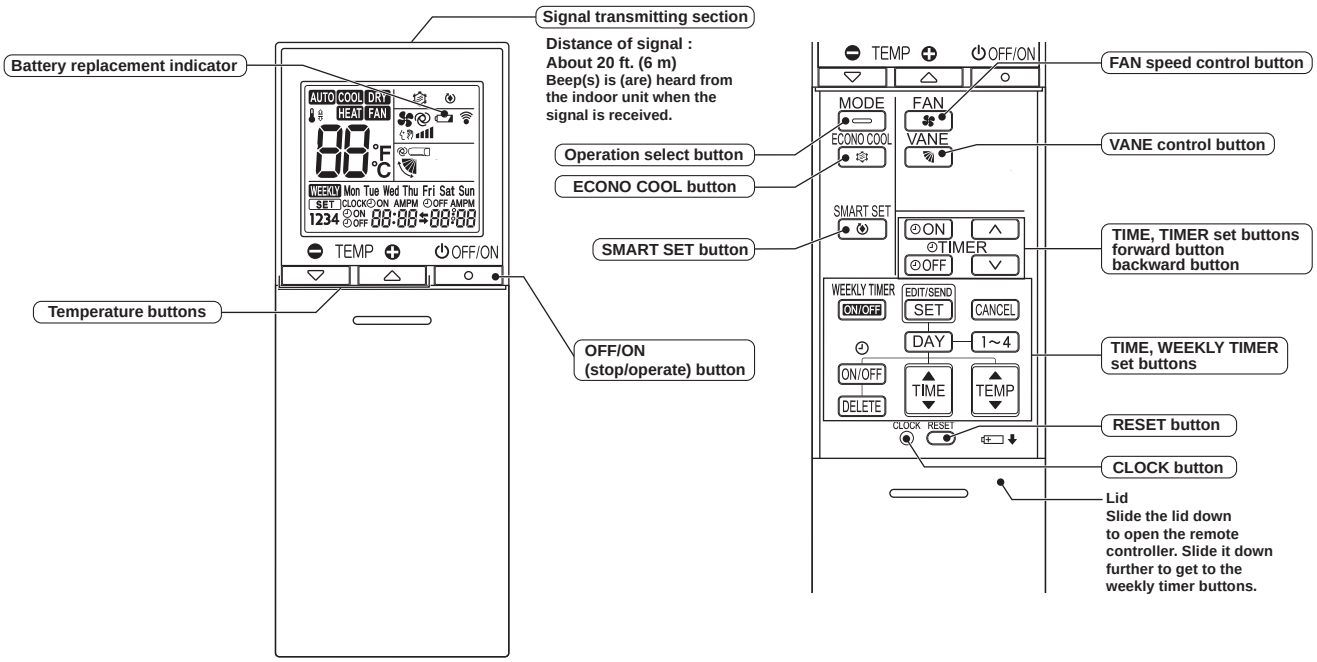

NAXWST18B112AA NAYWST18B112AA

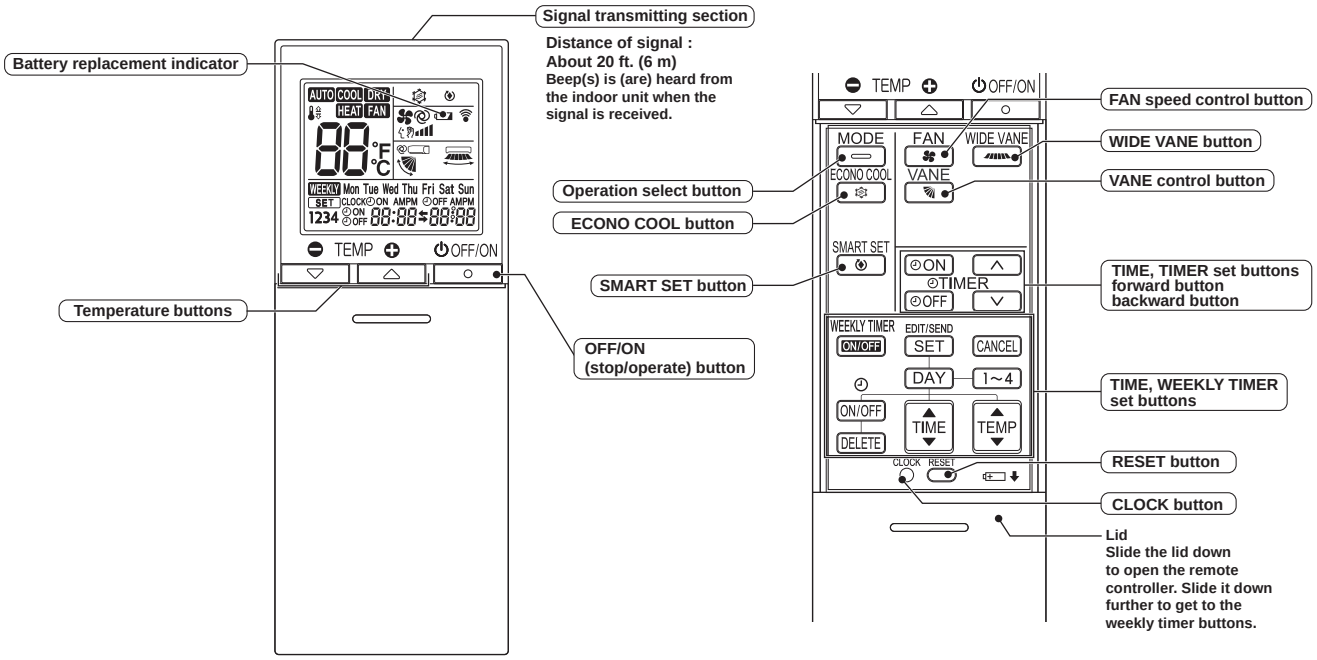

* The backlight turns on when using the remote controller.
The backlight goes off if the remote controller is not used for a while.

NOTE: Last setting will be stored after the unit is turned OFF with the remote controller. Indoor unit receives the signal of the remote controller with beeps.

NAXWST24B112AA
NAYWST24B112AA

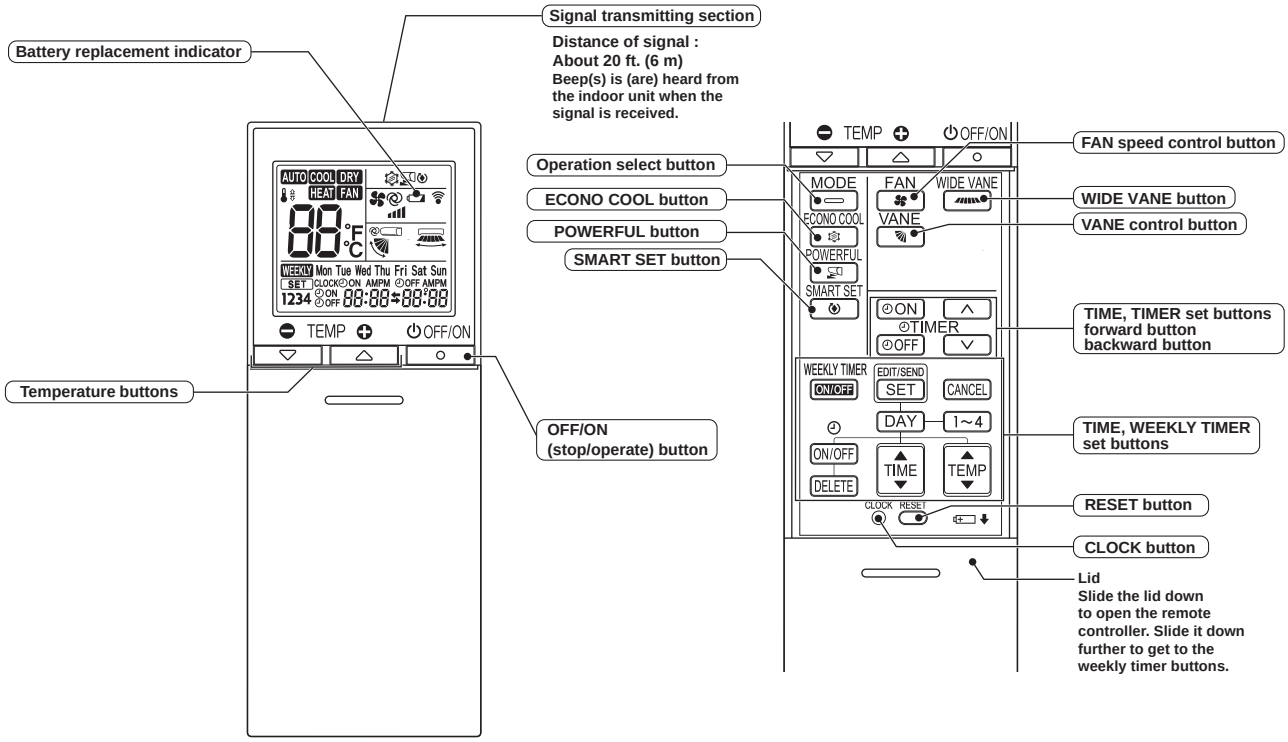

* The backlight turns on when using the remote controller.
The backlight goes off if the remote controller is not used for a while.

NOTE: Last setting will be stored after the unit is turned OFF with the remote controller. Indoor unit receives the signal of the remote controller with beeps.

INDOOR UNIT DISPLAY SECTION

Operation Indicator lamp

The operation indicator at the right side of the indoor unit indicates the operation state.

• The following indication applies regardless of shape of the indication.

Indication	Operation state	Room temperature
● ●	The unit is operating to reach the set temperature	About 4°F(2°C) or more away from set temperature
● ○	The room temperature is approaching the set temperature	About 2 to 4°F(1 to 2°C) from set temperature
● ◐	Standby mode (Only during multi system operation)	—

● Lit
◐ Blinking
○ Not lit

NAXWST30B112AA NAXWST36B112AA
NAYWST30B112AA NAYWST36B112AA

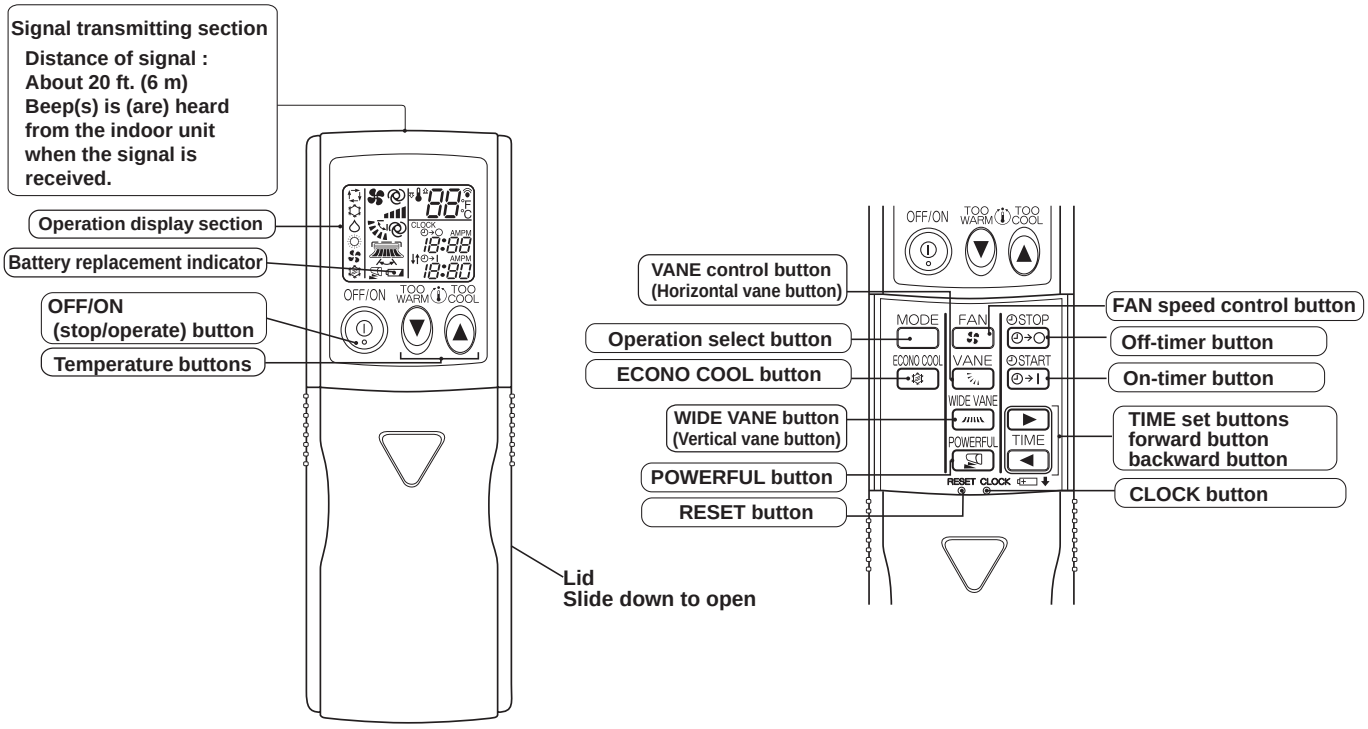

NOTE: Last setting will be stored after the unit is turned OFF with the remote controller. Indoor unit receives the signal of the remote controller with beeps.

INDOOR UNIT DISPLAY SECTION

Operation Indicator lamp

The operation indicator at the right side of the indoor unit indicates the operation state.

- The following indication applies regardless of shape of the indication.

Indication	Operation state	Room temperature
☀ ☀	The unit is operating to reach the set temperature	About 4°F (2°C) or more away from set temperature
☀ ○	The room temperature is approaching the set temperature	About 2°F (1°C) to 4°F (2°C) from set temperature

☀ Lit
○ Not lit

NAXWST30C112AA NAYWST30C112AA
NAXWST36C112AA NAYWST36C112AA

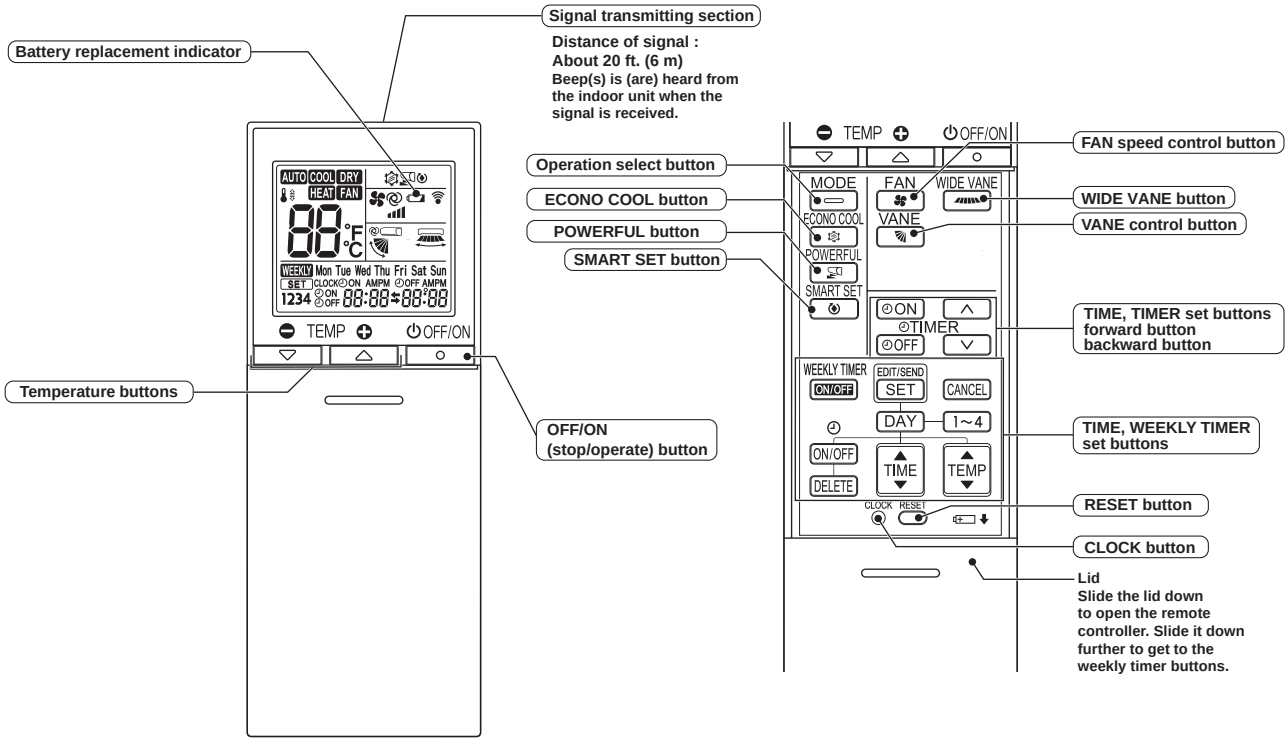

* The backlight turns on when using the remote controller.
The backlight goes off if the remote controller is not used for a while.

NOTE: Last setting will be stored after the unit is turned OFF with the remote controller. Indoor unit receives the signal of the remote controller with beeps.

INDOOR UNIT DISPLAY SECTION

Operation Indicator lamp

The operation indicator at the right side of the indoor unit indicates the operation state.

• The following indication applies regardless of shape of the indication.

Indication	Operation state	Room temperature
☀ ☀	The unit is operating to reach the set temperature.	About 4°F (2°C) or more away from set temperature
☀ ○	The room temperature is approaching the set temperature.	About 2 to 4°F (1 to 2°C) from set temperature

☀ Lit
☀ Blinking
○ Not lit

8-1. COOL (COOL /) OPERATION

(1) Press OFF/ON (stop/operate) button.
OPERATION INDICATOR lamp of the indoor unit turns on with a beep tone.
(2) Select COOL mode with Operation select button.
(3) Press Temperature buttons (TEMP ⊖ or ⊕ button/TOO WARM or TOO COOL button) to select the desired temperature.
The setting range is 61 ~ 88°F (16 ~ 31°C)

1. Coil frost prevention

When the temperature of indoor heat exchanger becomes too low, the coil frost prevention mode works.
The indoor fan operates at the set speed and the compressor stops. This mode continues until the temperature of indoor heat exchanger rises.

2. Low outside temperature operation

When the outside temperature is lower, low outside temperature operation starts, and the outdoor fan slows or stops.

8-2. DRY (DRY /) OPERATION

(1) Press OFF/ON (stop/operate) button.
OPERATION INDICATOR lamp of the indoor unit turns on with a beep tone.
(2) Select DRY mode with Operation select button.
(3) The set temperature is determined from the initial room temperature.

1. Coil frost prevention

Coil frost prevention is as same as COOL mode. (8-1.1.)

2. Low outside temperature operation

Low outside temperature operation is as same as COOL mode. (8-1.2.)

8-3. HEAT (HEAT /) OPERATION (NAX)

(1) Press OFF/ON (stop/operate) button.
OPERATION INDICATOR lamp of the indoor unit turns on with a beep tone.
(2) Select HEAT mode with Operation select button.
(3) Press Temperature buttons (TEMP ⊖ or ⊕ button/TOO WARM or TOO COOL button) to select the desired temperature.
The setting range is 61 ~ 88°F (16 ~ 31°C) (**WST30/36B112AA**)/50 ~ 88°F (10 ~ 31°C) (**Other models**).

1. Cold air prevention control

When the compressor is not operating or is starting, and the temperature of indoor heat exchanger and/or the room temperature is low or when defrosting is being done, the indoor fan will stop or rotate in Very Low speed.

2. High pressure protection

The compressor operational frequency is controlled by the temperature of the indoor heat exchanger to prevent the condensing pressure from increasing excessively.
When the temperature of indoor heat exchanger becomes too high, the high pressure protection works.
The indoor fan operates following the cold air prevention control. This mode continues until the temperature of indoor heat exchanger falls.

3. Defrosting

Defrosting starts when the temperature of outdoor heat exchanger becomes too low.
The compressor stops once, the indoor/outdoor fans stop, the 4-way valve reverses and the compressor re-starts.
This mode continues until the temperature of outdoor heat exchanger rises or the fixed time passes.

8-4. FAN (FAN /) OPERATION (NAY)

(1) Press OFF/ON (stop/operate) button.
OPERATION INDICATOR lamp of the indoor unit turns ON with a beep tone.
(2) Select FAN mode with Operation select button.
(3) Select the desired fan speed. When AUTO, it becomes Low.
Only indoor fan operates. Outdoor unit does not operate.

8-5. "I FEEL CONTROL" (AUTO /) OPERATION (NAY)

(1) Press OFF/ON (stop/operate) button on the remote controller.
OPERATION INDICATOR lamp of the indoor unit turns on with a beep tone.
(2) Select "I FEEL CONTROL" mode with Operation select button.
(3) The operation mode is determined by the room temperature at start-up of the operation.

Initial room temperature	Mode
77°F (25°C) or more	COOL mode of "I FEEL CONTROL"
More than 55°F (13°C), less than 77°F (25°C)	DRY mode of "I FEEL CONTROL"

- Once the mode is fixed, the mode does not change by room temperature afterwards.
- Under the ON TIMER ( ) operation, mode is determined according to the room temperature at the set time the operation starts.

(4) The initial set temperature is decided by the initial room temperature.

Model	Initial room temperature	Initial set temperature	
COOL mode of “I FEEL CONTROL”	79°F (26°C) or more	75°F (24°C)	*1
	77°F (25°C) to 79°F (26°C)	Initial room temperature minus 4°F (2°C)	
DRY mode of “I FEEL CONTROL”	More than 55°F (13°C), less than 77°F (25°C)	Initial room temperature minus 4°F (2°C)	

*1 When the system is restarted with the remote controller, the system operates with the previous set temperature regardless of room temperature at restart.
The set temperature is calculated by the previous set temperature.

(5) Temperature buttons
In “I FEEL CONTROL” (AUTO / ▭) mode, set temperature is decided by the microprocessor based on the room temperature.
In addition, set temperature can be controlled by Temperature buttons (TEMP ⊖ or ⊕ button/TOO WARM or TOO COOL button) when you feel too cool or too warm.
Each time the temperature button (TEMP ⊖ or ⊕ button/TOO WARM or TOO COOL button) is pressed, the indoor unit receives the signal and emits a beep tone.

• **Fuzzy control**
When the temperature button (TEMP ⊖ or ⊕ button/TOO WARM or TOO COOL button) is pressed, the microprocessor changes the set temperature, considering the room temperature, the frequency of pressing Temperature buttons (TEMP ⊖ or ⊕ button/TOO WARM or TOO COOL button) and the user’s preference to heat or cool. So this is called “Fuzzy control”, and works only in “I FEEL CONTROL” mode.
In DRY mode of “I FEEL CONTROL”, the set temperature doesn’t change.

⊕ / TOO COOL ▲ ··· To raise the set temperature 2 ~ 4°F (1 ~ 2°C)

⊖ / TOO WARM ▼ ··· To lower the set temperature 2 ~ 4°F (1 ~ 2°C)

8-6. AUTO CHANGE OVER ··· AUTO MODE OPERATION (NAX)

Once desired temperature is set, unit operation is switched automatically between COOL and HEAT operation.

Mode selection

(1) Initial mode
When unit starts the operation with AUTO operation from off;
- If the room temperature is higher than the set temperature, operation starts in COOL mode.
- If the room temperature is equal to or lower than the set temperature, operation starts in HEAT mode.

(2) Mode change
COOL mode changes to HEAT mode when about 15 minutes have passed with the room temperature 4°F (2°C) below the set temperature.
HEAT mode changes to COOL mode when about 15 minutes have passed with the room temperature 4°F (2°C) above the set temperature.

NOTE 1
If 2 or more indoor units are operating in multi system, there might be a case that the indoor unit, which is operating in ▭ (AUTO), cannot change over to the other operating mode (COOL ↔ HEAT **(NAX)**) and becomes a state of standby.
Refer to **NOTE 2 “FOR MULTI SYSTEM AIR CONDITIONER”**.

NOTE 2
FOR MULTI SYSTEM AIR CONDITIONER (NAXWST06/09/12/15/18/24)
OUTDOOR UNIT: MXZ series

Multi system air conditioner can connect 2 or more indoor units with 1 outdoor unit.

- When you try to operate 2 or more indoor units with 1 outdoor unit simultaneously, 1 for the cooling and the others for heating, the operation mode of the indoor unit that operates first is selected. Other indoor units cannot operate, and operation indicator lamp blinks as shown in the figure below. In this case, please set all the indoor units to the same operation mode.

<Operation indicator lamp>

- When indoor unit starts the operation while the defrosting of outdoor unit is being done, it takes a few minutes (max. 10 minutes) to blow out the warm air.
- In the heating operation, though indoor unit that does not operate may get warm or the sound of refrigerant flowing may be heard, they are not malfunction. The reason is that the refrigerant continuously flows into it.

8-7. AUTO VANE OPERATION

1. Horizontal vane

(1) Vane motor drive

These models are equipped with a stepping motor for the horizontal vane. The rotating direction, speed, and angle of the motor are controlled by pulse signals (approximately 12 V) transmitted from indoor microprocessor.

(2) The horizontal vane angle and mode change as follows by pressing VANE control button.

NAXWST30/36B112AA
NAYWST30/36B112AA

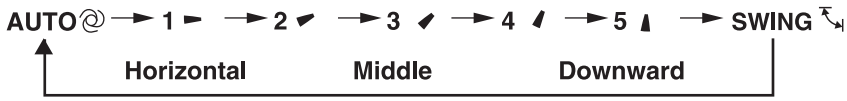

NAXWST06/09/12/15/18/24B112AA NAXWST30/36C112AA
NAYWST09/12/15/18/24B112AA NAYWST30/36C112AA

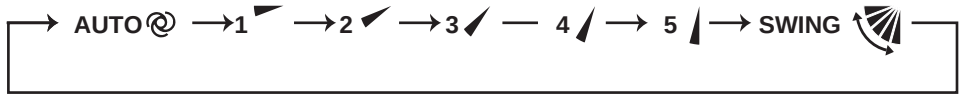

(3) Positioning

To confirm the standard position, the vane moves until it touches the vane stopper. Then the vane is set to the selected angle.

(a) The operation starts or finishes (including timer operation).
(b) The test run starts.
(c) When standby mode (only during multi system operation) starts or finishes.

(4) VANE AUTO ( ) mode

The microprocessor automatically determines the horizontal vane angle and operation to make the optimum room temperature distribution.

NAXWST06/09/12/15B112AA
NAYWST09/12/15B112AA

In COOL and DRY operation
FAN operation **(NAY)**
Vane angle is fixed to Horizontal position.

In HEAT operation **(NAX)**
Vane angle is fixed to Angle 5.

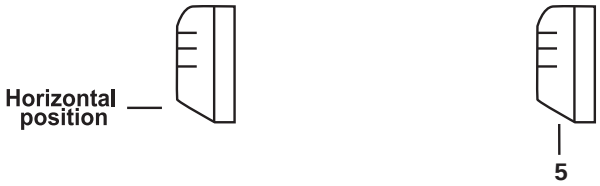

NAXWST18/24/30/36B112AA NAXWST30/36C112AA
NAYWST18/24/30/36B112AA NAYWST30/36C112AA

In COOL and DRY operation
FAN operation **(NAY)**
Vane angle is fixed to Horizontal position.

In HEAT operation **(NAX)**
Vane angle is fixed to Angle 4.

(5) STOP (operation OFF) and ON TIMER standby
In the following cases, the horizontal vane returns to the closed position.
(a) OFF/ON (stop/operate) button is pressed (POWER OFF).
(b) The operation is stopped by the emergency operation.
(c) ON TIMER is ON standby.

(6) Dew prevention
During COOL or DRY operation with the vane angle at Angle 4 ~ 5 when the compressor cumulative operation time exceeds 1 hour, the vane angle automatically changes to Angle 3 (**NAXWST18B112AA NAYWST18B112AA**)/ Angle 2 (**NAXWST30/36B112AA NAYWST30/36B112AA NAXWST30/36C112AA NAYWST30/36C112AA)/** Angle 1 (**other models**) for dew prevention.

(7) SWING ( ) mode
By selecting SWING mode with VANE control button, the horizontal vane swings vertically.

(8) Cold air prevention in HEAT operation **(NAX)**
The horizontal vane position is set to Upward.
NOTE: When 2 or more indoor units are operated with multi outdoor unit, even if any indoor unit turns thermostat OFF, this control does not work in the indoor unit.

(9) POWERFUL ( ) operation
(**NAXWST24/30/36B112AA NAYWST24/30/36B112AA NAXWST30/36C112AA NAYWST30/36C112AA**)
The air conditioner automatically adjusts the fan speed and the set temperature, and operates the POWERFUL mode. The POWERFUL mode is cancelled automatically 15 minutes after operation starts, or when POWERFUL button is pressed once again within 15 minutes after operation starts. The operation mode returns to the mode prior to POWERFUL operation. To manually cancel this operation, select a different mode or press one of the following buttons: FAN speed.

2. Vertical vane (**NAXWST18/24/30/36B112AA NAYWST18/24/30/36B112AA NAXWST30/36C112AA NAYWST30/36C112AA**)

(1) Vane motor drive

These models are equipped with a stepping motor for the vertical vane. The rotating direction, speed, and angle of the motor are controlled by pulse signals (approximately 12 V) transmitted from microprocessor.

(2) The vertical vane angle and mode change as follows by pressing WIDE VANE button.

NAXWST18B112AA NAYWST18B112AA

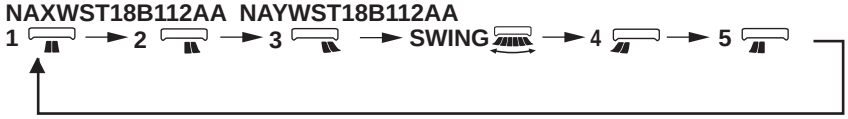

NAXWST24B112AA NAYWST24B112AA

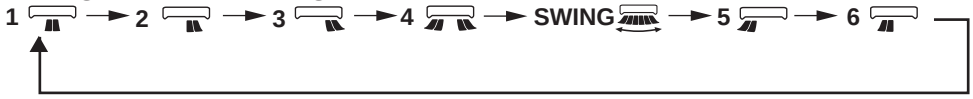

NAXWST30/36B112AA NAYWST30/36B112AA

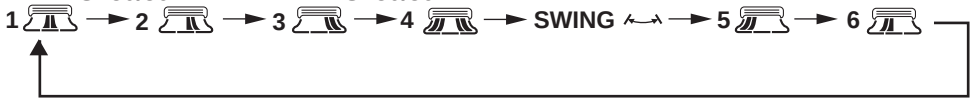

NAXWST30/36C112AA NAYWST30/36C112AA

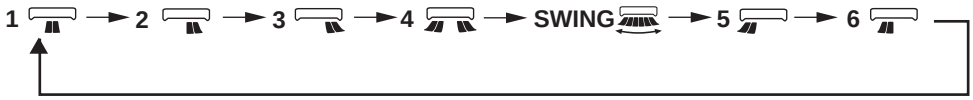

(3) Positioning

To confirm the standard position, the vane moves until it touches the vane stopper.
Then the vane is set to the desired angle.
Confirming of standard position is performed.
(a) OFF/ON (stop/operate) button is pressed (POWER ON/OFF).
(b) SWING is started or finished.
(c) The power supply turns ON.

(4) SWING MODE (/)

By selecting SWING mode with WIDE VANE button, the vertical vane swings horizontally.
The remote controller displays “ / ”.

(5) WIDE MODE (/)

(**NAXWST24/30/36B112AA NAYWST24/30/36B112AA NAXWST30/36C112AA NAYWST30/36C112AA**)

By selecting WIDE mode with WIDE VANE button, indoor fan speed becomes faster than setting fan speed on the remote controller (*). The remote controller displays “ / ”.

NOTE : The position of vane angle 3, angle 4 and angle 5 are different in COOL operation and HEAT operation.

* Indoor fan speed becomes faster than setting fan speed on the remote controller even when or / or is selected.

8-8. TIMER OPERATION (NAXWST30/36B112AA NAYWST30/36B112AA)

1. How to set the time

(1) Check that the current time is set correctly.

NOTE : Timer operation will not work without setting the current time. Initially “0:00” blinks at the current time display of TIME MONITOR, so set the current time correctly with CLOCK button.

How to set the current time

(a) Press the CLOCK button.

(b) Press the TIME set buttons (▲ and ▼ / ► and ◄) to set the current time.

- Each time forward button (▼ / ►) is pressed, the set time increases by 1 minute, and each time backward button (▲ / ◄) is pressed, the set time decreases by 1 minute.
- Pressing those buttons longer, the set time increases/decreases by 10 minutes.

(c) Press the CLOCK button.

(2) Press OFF/ON (stop/operate) button to start the air conditioner.

(3) Set the time of timer.

ON timer setting

(a) Press On-timer button (START) during operation.

(b) Set the time of the timer using TIME set buttons (▲ and ▼ / ► and ◄) .*

OFF timer setting

(a) Press Off-timer button (STOP) during operation.

(b) Set the time of the timer using TIME set buttons (▲ and ▼ / ► and ◄).*

* Each time forward button (▼ / ►) is pressed, the set time increases by 10 minutes; each time backward button (▲ / ◄) is pressed, the set time decreases by 10 minutes.

2. To release the timer

To release ON timer, press On-timer button (START).

To release OFF timer, press Off-timer button (STOP).

TIMER is cancelled and the display of set time disappears.

PROGRAM TIMER

- OFF timer and ON timer can be used in combination. The timer of the set time that is reached first will operate first.
- “ ↓ ” and “ ↑ ” display shows the order of OFF timer and ON timer operation.

(Example 1) The current time is 8:00 PM.
The unit turns off at 11:00 PM, and on at 6:00 AM.

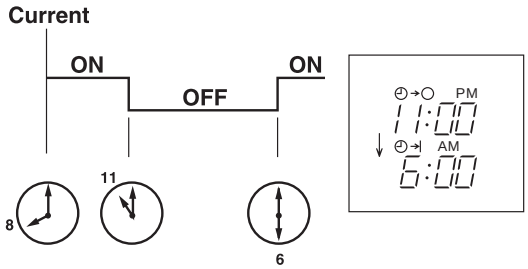

(Example 2) The current time is 11:00 AM.
The unit turns on at 5:00 PM, and off at 9:00 PM.

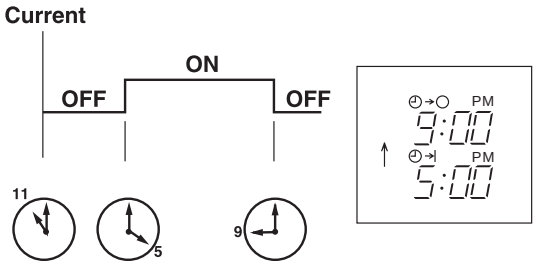

NOTE: If the main power is turned OFF or a power failure occurs while ON/OFF timer is active, the timer setting is cancelled. As these models are equipped with an auto restart function, the air conditioner starts operating with timer cancelled when power is restored.

8-9. TIMER OPERATION
(NAXWST06/09/12/15/18/24B112AA NAYWST09/12/15/18/24B112AA NAXWST30/36C112AA NAYWST30/36C112AA)

1. How to set the time

(1) Check that the current time is set correctly.

NOTE: Timer operation will not work without setting the current time. Initially “12:00 AM” blinks at the current time display of TIME MONITOR, so set the current time correctly with CLOCK button.

How to set the current time

(a) Press the CLOCK button.

(b) Press the TIME SET buttons (∧ and ∨) to set the current time.

- Each time forward button (∧) is pressed, the set time increases by 1 minute, and each time backward button (∨) is pressed, the set time decreases by 1 minute.
- Pressing those buttons longer, the set time increases/decreases by 10 minutes.

(c) Press the CLOCK set button.

(2) Press OFF/ON (stop/operate) button to start the air conditioner.

(3) Set the time of timer.

ON timer setting

(a) Press ON TIMER button(ON) during operation.

(b) Set the time of the timer using TIME SET buttons (∧ and ∨). *

OFF timer setting

(a) Press OFF TIMER button (OFF) during operation.

(b) Set the time of the timer using TIME SET buttons (∧ and ∨). *

* Each time forward button (∧) is pressed, the set time increases by 10 minutes: each time backward button (∨) is pressed, the set time decreases by 10 minutes.

2. To release the timer

To release ON timer, press ON TIMER button (ON).

To release OFF timer, press OFF TIMER button(OFF).

TIMER is cancelled and the display of set time disappears.

PROGRAM TIMER

- OFF timer and ON timer can be used in combination. The set time that is reached first will operate first.
- “➡” and “⬅” display shows the order of OFF timer and ON timer operation.

(Example 1) The current time is 8:00 PM.
The unit turns off at 11:00 PM, and on at 6:00 AM.

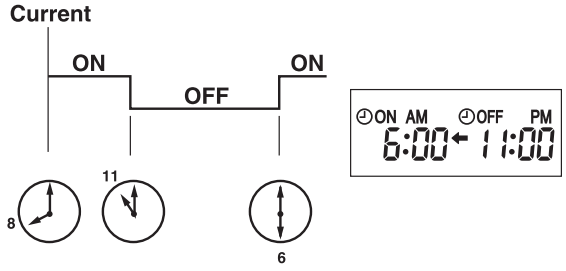

(Example 2) The current time is 11:00 AM.
The unit turns on at 5:00 PM, and off at 9:00 PM.

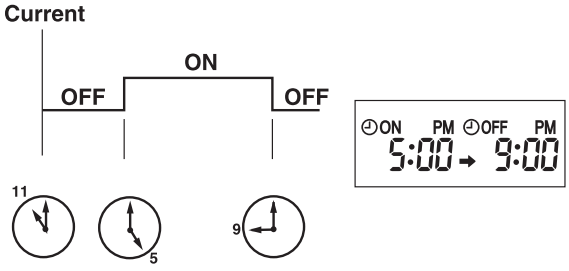

NOTE: If the main power is turned OFF or a power failure occurs while ON/OFF timer is active, the timer setting is cancelled. As these models are equipped with an auto restart function, the air conditioner starts operating with timer cancelled when power is restored.

8-10. WEEKLY TIMER OPERATION (NAXWST06/09/12/15/18/24B112AA NAYWST09/12/15/18/24B112AA NAXWST30/36C112AA NAYWST30/36C112AA)

• A maximum of 4 ON or OFF timers can be set for individual days of the week.
• A maximum of 28 ON or OFF timers can be set for a week.

E.g. : Runs at 75°F (24°C) from waking up to leaving home, and runs at 81°F (27°C) from getting home to going to bed on weekdays.
Runs at 81°F (27°C) from waking up late to going bed early on weekends.

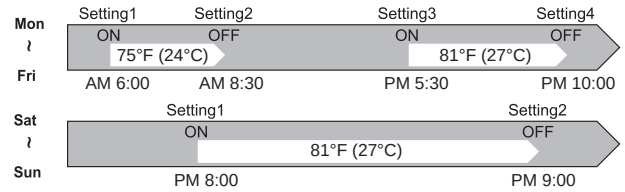

NOTE:
• The simple ON/OFF timer setting is available while the weekly timer is on. In this case, the ON/OFF timer has priority over the weekly timer; the weekly timer operation will start again after the simple ON/OFF timer is complete.
• When the weekly timer is set, temperature can not be set to 50°F (10°C).
• The weekly timer operation and SMART SET operation cannot be used together.

1. How to set the weekly timer

* Make sure that the current time and day are set correctly.

(1) Press [EDIT/SEND SET] button to enter the weekly timer setting mode.

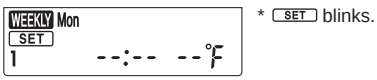

* [SET] blinks.

(2) Press [DAY] and [1~4] buttons to select setting day and number.

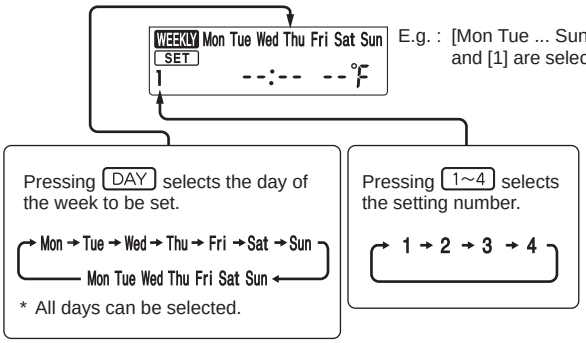

(3) Press [ON/OFF], [TIME], and [TEMP] buttons to set ON/OFF, time, and temperature.

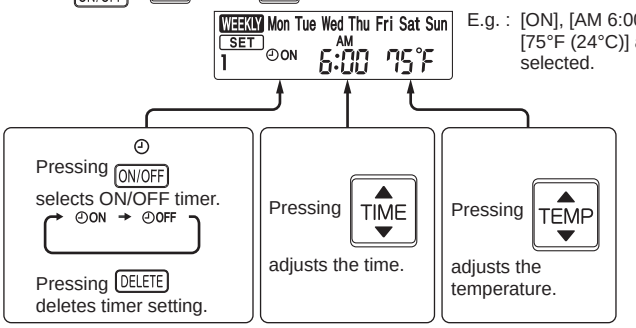

* Hold down the button to change the time quickly.
* The temperature can be set between 61°F and 88°F (16°C and 31°C) at weekly timer.

Press [DAY] and [1~4] buttons to continue setting the timer for other days and/or numbers.

(4) Press [EDIT/SEND SET] button to complete and transmit the weekly timer setting.

* [SET] which was blinking goes out, and the current time will be displayed.

NOTE:

- Press [EDIT/SEND SET] button to transmit the setting information of weekly timer to the indoor unit. Point the remote controller toward the indoor unit for 3 seconds.
- When setting the timer for more than one day of the week or one number, [EDIT/SEND SET] button does not have to be pressed per each setting. Press [EDIT/SEND SET] button once after all the settings are complete. All the weekly timer settings will be saved.
- Press [EDIT/SEND SET] button to enter the weekly timer setting mode, and press and hold [DELETE] button for 5 seconds to erase all weekly timer settings. Point the remote controller toward the indoor unit.

(5) Press [WEEKLY TIMER ON/OFF] button to turn the weekly timer ON. ([WEEKLY] lights.)

- When the weekly timer is ON, the day of the week whose timer setting is complete, will light.

Press [WEEKLY TIMER ON/OFF] button again to turn the weekly timer OFF. ([WEEKLY] goes out.)

NOTE:
The saved settings will not be cleared when the weekly timer is turned OFF.

2. Checking weekly timer setting

(1) Press [EDIT/SEND SET] button to enter the weekly timer setting mode.

*[SET] blinks.

(2) Press [DAY] or [1~4] buttons to view the setting of the particular day or number.

(3) Press [CANCEL] button to exit the weekly timer setting.

NOTE:
When all days of the week are selected to view the settings and a different setting is included among them, --:-- --°F will be displayed.

8-11. SMART SET (⏻) OPERATION

1. How to SET SMART SET operation

(1) Press OFF/ON (stop/operate) button.
(2) Select COOL or HEAT **(NAX)** mode.
(3) Press SMART SET button.
(4) Set the temperature, fan speed, and airflow direction for SMART SET operation.

NOTE:
- SMART SET operation cannot be selected during DRY or AUTO mode operation.
- The setting range of HEAT mode in SMART SET operation is between 50°F (10°C) and 61 - 88°F (16 - 31°C) (**NAXWST30/36B112AA**), 50°F - 88°F (10 - 31°C) (**other NAX models**).
- 2 settings can be saved. (One for COOL, one for HEAT) **(NAX)**.
- 1 setting can be saved. **(NAY)**.

2. How to cancel operation

- Press SMART SET button again.
- SMART SET operation can also be cancelled by pressing Operation select button to change the operation mode. The same setting will be selected from the next time by simply pressing SMART SET button.

8-12. EMERGENCY/TEST OPERATION

In case of test run operation or emergency operation, use the emergency operation switch on the front of the indoor unit. Emergency operation is available when the remote controller is missing, has failed or the batteries of the remote controller run down. The unit will start and OPERATION INDICATOR lamp will light.
The first 30 minutes of operation is the test run operation. This operation is for servicing. The Indoor fan speed runs at High speed and the temperature control does not work.
After 30 minutes of test run operation the system shifts to EMERGENCY COOL/HEAT**(NAX)** MODE with a set temperature of 75°F (24°C). The fan speed shifts to Med.
The coil frost prevention works even in the test run or the emergency operation.
In the test run or emergency operation, the horizontal vane operates in VANE AUTO (@) mode.
Emergency operation continues until the emergency operation switch is pressed once or twice or the unit receives any signal from the remote controller. In case of latter normal operation will start.

NOTE : Do not press the emergency operation switch during normal operation.

Operation Indicator Lamp
NAXWST06/09/12/15/18/24B112AA
NAYWST09/12/15/18/24B112AA

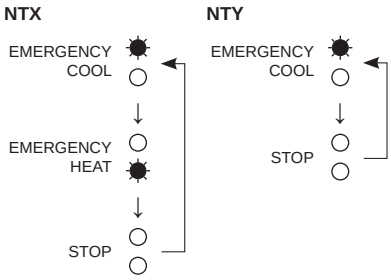

NAXWST30/36B112AA NAXWST30/36C112AA
NAYWST30/36B112AA NAYWST30/36C112AA

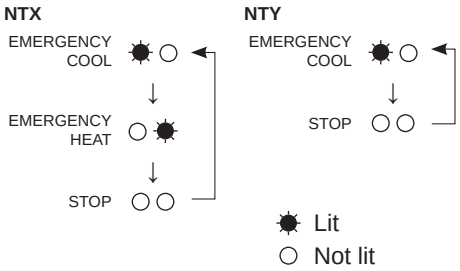

Operation mode	COOL	HEAT (**NAX**)
Set temperature	75°F(24°C)	75°F(24°C)
Fan speed	Med.	Med.
Horizontal vane	Auto	Auto

The operation mode is indicated by the Operation Indicator lamp as follows.

NAXWST06/09/12/15/18/24B112AA
NAYWST09/12/15/18/24B112AA

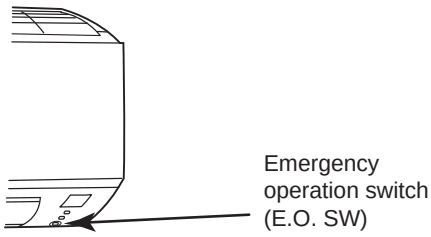

NAXWST30/36B112AA NAXWST30/36C112AA
NAXWST30/36B112AA NAXWST30/36C112AA

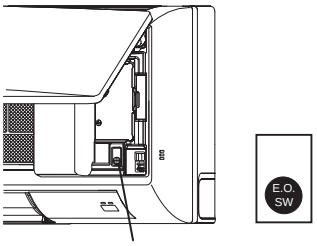

8-13. 3-MINUTE TIME DELAY OPERATION

When the system turns OFF, compressor will not restart for 3 minutes as 3-minute time delay function operates to protect compressor from overload.

8-14 . CHANGING TEMPERATURE INDICATION (°F /°C)

- The preset unit is °F.
- °F→°C : Press RESET button while the temperature buttons are pressed.
- °C→°F : Press RESET button or remove the batteries.

(WST30/36B112AA) **(Other models)**

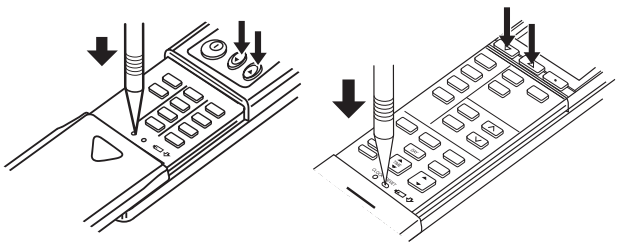

Press RESET button gently using a fine-tipped object.

9 TROUBLESHOOTING

NAXWST06B112AA NAXWST09B112AA NAXWST12B112AA NAXWST15B112AA NAXWST18B112AA NAXWST24B112AA NAXWST30B112AA NAXWST36B112AA NAXWST30C112AA NAXWST36C112AA
NAYWST09B112AA NAYWST12B112AA NAYWST15B112AA NAYWST18B112AA NAYWST24B112AA NAYWST30B112AA NAYWST36B112AA NAYWST30C112AA NAYWST36C112AA

9-1. CAUTIONS ON TROUBLESHOOTING

1. Before troubleshooting, check the following

1) Check the power supply voltage.
2) Check the indoor/outdoor connecting wire for miswiring.

2. Take care of the following during servicing

1) Before servicing the air conditioner, be sure to turn off the unit first with the remote controller, and then after confirming the horizontal vane is closed, turn off the breaker and/or disconnect the power plug.
2) Be sure to turn OFF the power supply before removing the front panel, the cabinet, the top panel, and the electronic control P.C. board.
3) When removing the electronic control P.C. board, hold the edge of the board with care NOT to apply stress on the components.
4) When connecting or disconnecting the connectors, hold the housing of the connector. DO NOT pull the lead wires.

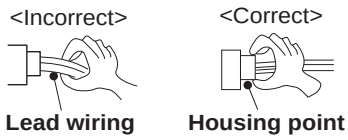

3. Troubleshooting procedure

1) First, check if the OPERATION INDICATOR lamp on the indoor unit is blinking on and off to indicate an abnormality. To make sure, check how many times the OPERATION INDICATOR lamp is blinking on and off before starting service work.
2) Before servicing, verify that all connectors and terminals are connected properly.
3) When the electronic control P.C. board seems to be defective, check for disconnection of the copper foil pattern and burnt or discolored components.
4) When troubleshooting, refer to 9-2., 9-3. and 9-4.

4. How to replace batteries

Weak batteries may cause the remote controller malfunction.
In this case, replace the batteries to operate the remote controller normally.

① Remove the front lid and insert batteries.
Then reattach the front lid.

(WST30/36B112AA)

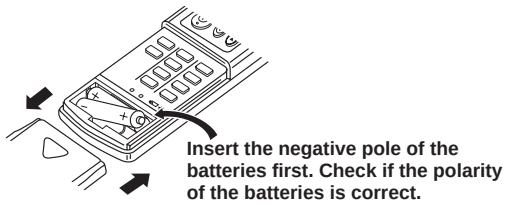

(Other models)

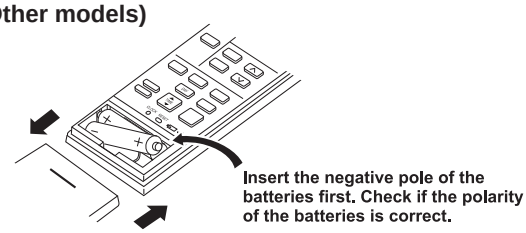

② Press RESET button with a fine-tipped object, and then use the remote controller.

(WST30/36B112AA)

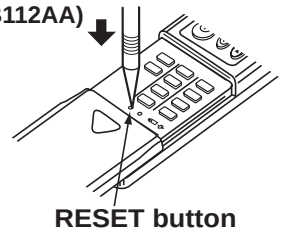

(Other models)

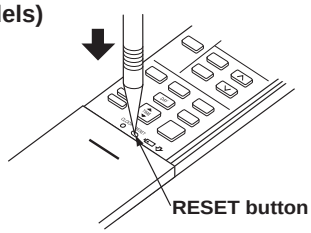

NOTE : 1. If RESET button is not pressed, the remote controller may not operate correctly.
2. This remote controller has a circuit to automatically reset the microprocessor when batteries are replaced. This function is equipped to prevent the microprocessor from malfunctioning due to the voltage drop caused by the battery replacement.
3. Do not use the leaking batteries.

9-2. FAILURE MODE RECALL FUNCTION

Outline of the function

This air conditioner can memorize the abnormal condition which has occurred once.

Even though LED indication listed on the troubleshooting check table (9-4.) disappears, the memorized failure details can be recalled.

This mode is very useful when the unit needs to be repaired for the abnormality which does not recur.

1. Flow chart of failure mode recall function for the indoor/outdoor unit

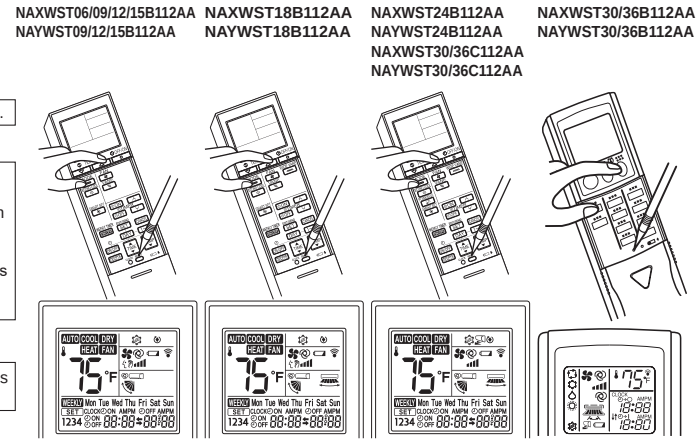

Operational procedure

The cause of abnormality cannot be found because the abnormality does not recur.

Setting up the failure mode recall function

Turn ON the power supply.
<Preparation of the remote controller>
① While pressing both Operation select button and TEMP ⊕/TOO COOL button on the remote controller at the same time, press RESET button.
② First, release RESET button.
Hold down the other two buttons for another 3 seconds. Confirm all the indicators on the LCD screen of the remote controller are displayed. Then release the buttons.

Press OFF/ON (stop/operate) button of the remote controller (the set temperature is displayed) with the remote controller headed towards the indoor unit. *1

Does the upper/left lamp of OPERATION INDICATOR lamp on the indoor unit blink at the interval of 0.5 seconds?
Blinks: Either indoor or outdoor unit is abnormal. Beep is emitted at the same timing as the blinking of the upper/left lamp of OPERATION INDICATOR lamp. *2

No (OFF) → Indoor unit is normal.
But the outdoor unit might be abnormal because there are some abnormalities that can't be recalled with this way.
Confirm if outdoor unit is abnormal according to the detailed outdoor unit failure mode recall function.

Yes (Blinks)

Judgment of indoor/outdoor abnormality

Before blinking, does the upper/left lamp of OPERATION INDICATOR lamp stay ON for 3 seconds?
Stays ON for 3 seconds (without beep):

Yes → The outdoor unit is abnormal.
Check the blinking pattern, and confirm the abnormal point with the table of outdoor unit failure mode recall function. (Refer to outdoor unit service manual.)
Make sure to check at least two consecutive blinking cycles. *3

No → The indoor unit is abnormal.
Check the blinking pattern, and confirm the abnormal point with the table of indoor unit failure mode recall function. (Refer to 9-2.2)
Make sure to check at least two consecutive blinking cycles. *2

Releasing the failure mode recall function

Release the failure mode recall function by the following procedures.
• Turn OFF the power supply and turn it ON again.
• Press RESET button of the remote controller.

Repair the defective parts.

Deleting the memorized abnormal condition

① After repairing the unit, recall the failure mode again according to "Setting up the failure mode recall function" mentioned above.
② Press OFF/ON (stop/operate) button of the remote controller (the set temperature is displayed) with the remote controller headed towards the indoor unit.
③ Press the emergency operation switch so that the memorized abnormal condition is deleted.
④ Release the failure mode recall function according to "Releasing the failure mode recall function" mentioned above.

NOTE: 1. Make sure to release the failure mode recall function once it is set up, otherwise the unit cannot operate properly.
2. If the abnormal condition is not deleted from the memory, the last abnormal condition is kept memorized.

*1. Regardless of normal or abnormal condition, a short beep is emitted once the signal is received.
*2. Blinking pattern when the indoor unit is abnormal:

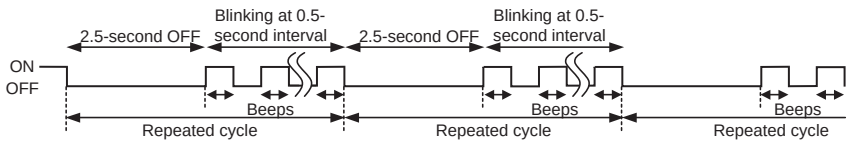

*3.Blinking pattern when the outdoor unit is abnormal:

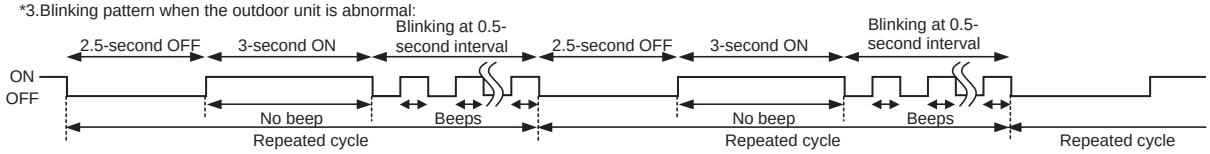

2. Table of indoor unit failure mode recall function

Upper/Left lamp of OPERATION INDICATOR lamp	Abnormal point (Failure mode)	Condition	Remedy
Not lit	Normal	—	—
1-time blink every 0.5-second	Room temperature thermistor	The room temperature thermistor short or open circuit is detected every 8 seconds during operation.	Refer to the characteristics of the room temperature thermistor (9-7.).
2-time blink 2.5-second OFF	Indoor coil thermistor	The indoor coil thermistor short or open circuit is detected every 8 seconds during operation.	Refer to the characteristics of the main indoor coil thermistor, the sub indoor coil thermistor (9-7.).
3-time blink 2.5-second OFF	Serial signal	The serial signal from outdoor unit is not received for a maximum of 6 minutes.	• Refer to 9-6.Ⓓ “How to check miswiring and serial signal error”. • Refer to “Check of compressor protector” of outdoor unit service manual. (Except **WST30/36B112AA**)
11-time blink 2.5-second OFF	Indoor fan motor	The rotational frequency feedback signal is not emit during the 12 seconds the indoor fan operation.	Refer to 9-6.Ⓐ “Check of indoor fan motor”.
12-time blink 2.5-second OFF	Indoor control system	It cannot properly read data in the nonvolatile memory of the indoor electronic control P.C. board.	Replace the indoor electronic control P.C. board.

NOTE : Blinking patterns of this mode differ from the ones of Troubleshooting check table (9-4.).

9-3. INSTRUCTION OF TROUBLESHOOTING

NOTE: If blinking of OPERATION INDICATOR lamp cannot be checked, it can be checked with failure mode recall function.

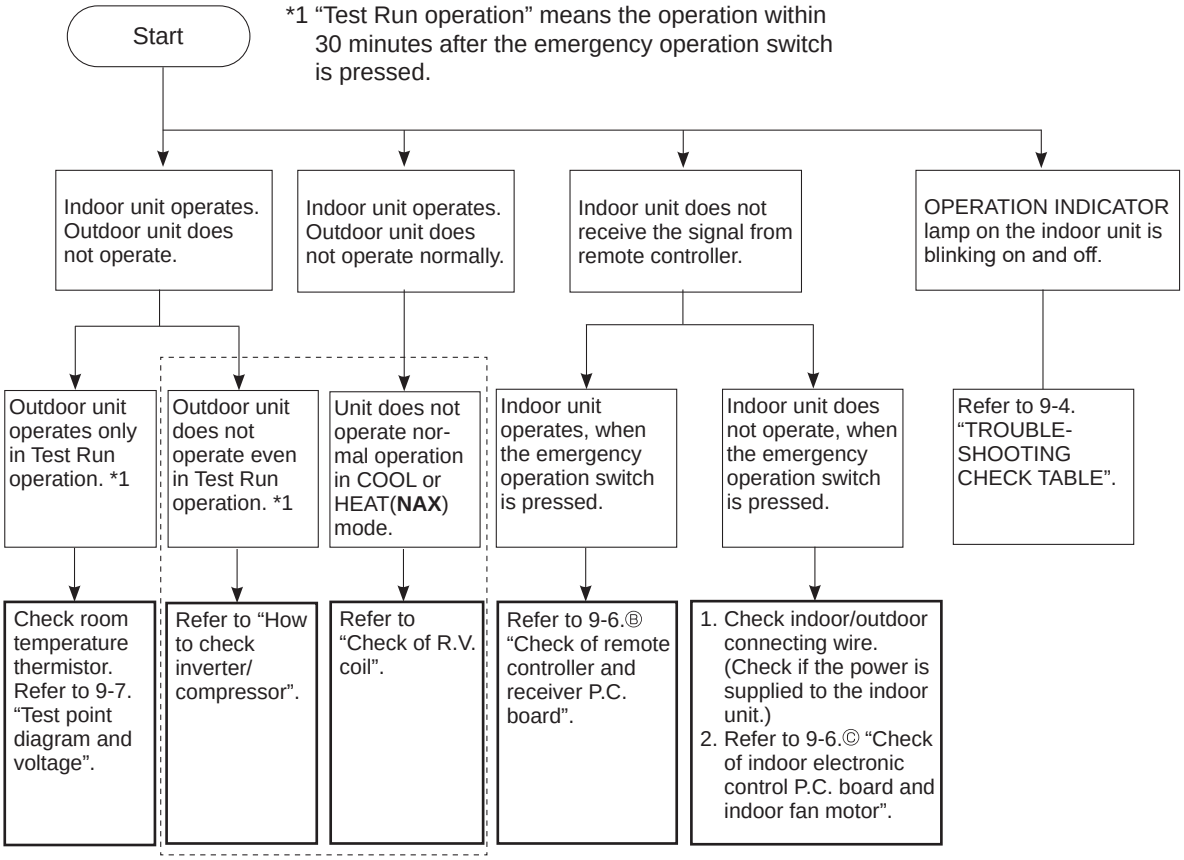

9-4. TROUBLESHOOTING CHECK TABLE

Before taking measures, make sure that the symptom reappears for accurate troubleshooting.
When the indoor unit has started operation and detected an abnormality of the following condition (the first detection after the power ON), the indoor fan motor turns OFF and OPERATION INDICATOR lamp blinks.

NAXWST06B112AA NAXWST09B112AA NAXWST12B112AA NAXWST15B112AA NAXWST18B112AA NAXWST24B112AA
NAYWST09B112AA NAYWST12B112AA NAYWST15B112AA NAYWST18B112AA NAYWST24B112AA

OPERATION INDICATOR

Lit
Blinking
Not lit

*1 There is possibility that diesel explosion may occur due to the air mixed in the refrigerant circuit. First, ensure that there are no leakage points on the valves, flare connections, etc. that allow the air to flow into the refrigerant circuit, or no blockage points (e.g. clogged or closed valves) in the refrigerant circuit that cause an increase in pressure.
If there is no abnormal point like above and the system operates cooling and heating modes normally, the indoor thermistor might have a problem, resulting in false detection.
Check both the indoor coil thermistor and the room temperature thermistor, and replace faulty thermistor(s), if any.
NOTE: Do not start the operation again without repair to prevent hazards.

No.	Abnormal point	Operation indicator lamp	Symptom	Condition	Remedy
1	Miswiring or serial signal	Upper lamp blinks. 0.5-second ON 0.5-second OFF	Indoor unit and outdoor unit do not operate.	The serial signal from the outdoor unit is not received for 6 minutes.	• Refer to 9-6. Ⓓ "How to check miswiring and serial signal error". • Refer to "Check of compressor protector" of outdoor unit service manual.
2	Indoor coil thermistor Room temperature thermistor	Upper lamp blinks. 2-time blink 2.5-second OFF		The indoor coil or the room temperature thermistor is short or open circuit.	• Refer to the characteristics of indoor coil thermistor, and the room temperature thermistor (9-7.).
3	Indoor fan motor	Upper lamp blinks. 3-time blink 2.5-second OFF		The rotational frequency feedback signal is not emitted during the indoor fan operation.	• Refer to 9-6. Ⓐ "Check of indoor fan motor".
4	Indoor control system	Upper lamp blinks. 4-time blink 2.5-second OFF		It cannot properly read data in the nonvolatile memory of the indoor electronic control P.C. board.	• Replace the indoor electronic control P.C. board.
5	Outdoor power system	Upper lamp blinks. 5-time blink 2.5-second OFF		It consecutively occurs 3 times that the compressor stops for overcurrent protection or startup failure protection within 1 minute after startup.	• Refer to "How to check of inverter/compressor". Refer to outdoor unit service manual • Check the stop valve.
6	Outdoor thermistors	Upper lamp blinks. 6-time blink 2.5-second OFF		The outdoor thermistors short or open circuit during the compressor operation.	• Refer to "Check of outdoor thermistor". Refer to outdoor unit service manual.
7	Outdoor control system	Upper lamp blinks. 7-time blink 2.5-second OFF		It cannot properly read data in the nonvolatile memory of the inverter P.C. board or the outdoor electronic control P.C. board.	• Replace the inverter P.C. board or the outdoor electronic control P.C. board. Refer to outdoor unit service manual.
8	Other abnormality *1	Upper lamp blinks. 14-time blink or more 2.5-second OFF		An abnormality other than the above is detected. An abnormality of the indoor thermistors or ambient temperature thermistor is detected.	• Check the stop valve. • Check the 4-way valve. • Check the abnormality in detail using the failure mode recall function for outdoor unit. • Refer to "TEST POINT DIAGRAM AND VOLTAGE" on the service manual of indoor and outdoor unit for the characteristics of the thermistors. (Do not start the operation again without repair to prevent hazards.)
9	Outdoor control system	Upper lamp lights up.	Outdoor unit does not operate	It cannot properly read data in the nonvolatile memory of the inverter P.C. board or the outdoor electronic control P.C. board.	• Check the blinking pattern of the LED on the inverter P.C. board or the outdoor electronic control P.C. board.

OPERATION INDICATOR

● Lit
☼ Blinking
○ Not lit

No.	Abnormal point	Operation indicator lamp	Symptom	Condition	Remedy
1	**MXZ type** Operation mode setting	Upper lamp lights and lower lamp blinks. ●○○○○○●○○○○○● 2.5-second OFF	Outdoor unit operates but indoor unit does not operate.	The operation mode of the each indoor unit is differently set to COOL (includes DRY) and HEAT at the same time, the operation mode of the indoor unit that has operated at first has the priority.	• Unify the operation mode. Refer to outdoor unit service manual.

NAXWST30B112AA NAXWST36B112AA NAYWST30B112AA NAYWST36B112AA NAXWST30C112AA NAXWST36C112AA NAYWST30C112AA NAYWST36C112AA

*1 There is possibility that diesel explosion may occur due to the air mixed in the refrigerant circuit. First, ensure that there are no leakage points on the valves, flare connections, etc. that allow the air to flow into the refrigerant circuit, or no blockage points (e.g. clogged or closed valves) in the refrigerant circuit that cause an increase in pressure.
If there is no abnormal point like above and the system operates cooling and heating modes normally, the indoor thermistor might have a problem, resulting in false detection.
Check both the indoor coil thermistor and the room temperature thermistor, and replace faulty thermistor(s), if any.
NOTE: Do not start the operation again without repair to prevent hazards.

OPERATION INDICATOR

☼ ○

● Lit
☼ Blinking
○ Not lit

No.	Abnormal point	Operation indicator lamp	Symptom	Condition	Remedy
1	Miswiring or serial signal	Left lamp blinks. 0.5-second ON ●○●○●○●○ 0.5-second OFF	Indoor unit and outdoor unit do not operate.	The serial signal from the outdoor unit is not received for a maximum of 6 minutes.	• Refer to 9-6.Ⓓ "How to check miswiring and serial signal error". • Refer to "Check of compressor protector" of outdoor unit service manual. (**C112AA model** only)
2	Indoor coil thermistor Room temperature thermistor	Left lamp blinks. 2-time blink ●○●○○○○○●○●○○ 2.5-second OFF	Indoor unit and outdoor unit do not operate.	The indoor coil or the room temperature thermistor is short or open circuit.	• Refer to 9-7.the characteristics of indoor coil thermistor, and the room temperature thermistor.
3	Indoor fan motor	Left lamp blinks. 3-time blink ●○●○●○○○○○●○●○●○○○ 2.5-second OFF	Indoor unit and outdoor unit do not operate.	The rotational frequency feedback signal is not emitted during the indoor fan operation.	• Refer to 9-6.Ⓐ "Check of indoor fan motor".
4	Indoor control system	Left lamp blinks. 4-time blink ●○●○●○●○○○○○●○●○●○● 2.5-second OFF	Indoor unit and outdoor unit do not operate.	It cannot properly read data in the nonvolatile memory of the indoor electronic control P.C. board.	• Replace the indoor electronic control P.C. board.
5	Outdoor power system	Left lamp blinks. 5-time blink ●○●○●○●○●○○○○○●○●○ 2.5-second OFF	Indoor unit and outdoor unit do not operate.	It consecutively occurs 3 times that the compressor stops for overcurrent protection or startup failure protection within 1 minute after startup.	• Refer to "How to check of inverter/ compressor". Refer to outdoor unit service manual. • Check the stop valve.
6	Outdoor thermistors	Left lamp blinks. 6-time blink ●○●○●○●○●○●○○○○○●○ 2.5-second OFF	Indoor unit and outdoor unit do not operate.	The outdoor thermistors short or open circuit during the compressor operation.	• Refer to "Check of outdoor thermistor". Refer to outdoor unit service manual.
7	Outdoor control system	Left lamp blinks. 7-time blink ●○●○●○●○●○●○●○○○○○● 2.5-second OFF	Indoor unit and outdoor unit do not operate.	It cannot properly read data in the nonvolatile memory of the inverter P.C. board or the outdoor electronic control P.C. board.	• Replace the inverter P.C. board or the outdoor electronic control P.C. board. Refer to outdoor unit service manual.
8	Other abnormality *1	Left lamp blinks. 14-time blink ●○●○●○●○●○●○●○●○●○●○●○●○ ●○●○●○○○○○○● 2.5-second OFF	Indoor unit and outdoor unit do not operate.	An abnormality other than the above is detected. An abnormality of the indoor thermistors or ambient temperature thermistor is detected.	• Confirm the abnormality in detail using the failure mode recall function for outdoor unit. • Refer to "TEST POINT DIAGRAM AND VOLTAGE" on the service manual of indoor and outdoor unit for the characteristics of the thermistors. (Do not start the operation again without repair to prevent hazards.)

9-5. TROUBLESHOOTING CRITERION OF MAIN PARTS

NAXWST06B112AA NAXWST09B112AA NAXWST12B112AA NAXWST15B112AA NAXWST18B112AA NAXWST24B112AA \NAXWST30B112AA NAXWST36B112AA NAXWST30C112AA NAXWST36C112AA NAYWST09B112AA NAYWST12B112AA NAYWST15B112AA NAYWST18B112AA NAYWST24B112AA NAYWST30B112AA NAYWST36B112AA NAYWST30C112AA NAYWST36C112AA

<table>
<tr><th>Part name</th><th>Check method and criterion</th><th>Figure</th></tr>
<tr><td>Room temperature thermistor (RT11)
Indoor coil thermistor (RT12 (MAIN), RT13 (SUB))</td><td>Measure the resistance with a multimeter.

Refer to 9-7. “Test point diagram and voltage”, “Indoor electronic control P.C. board”, the chart of thermistor.</td><td></td></tr>
<tr><td>Indoor fan motor (MF)</td><td>Check 9-6. Ⓐ.</td><td></td></tr>
<tr><td>NAXWST06/09/12/15B112AA
NAYWST09/12/15B112AA
Vane motor (MV)</td><td>Measure the resistance between the terminals with a multimeter.
(Temperature: 50 - 86°F (10 - 30°C))
<table>
<tr><th>Color of the lead wire</th><th>Normal</th></tr>
<tr><td>RED - BLK</td><td>223 - 268 Ω</td></tr>
</table></td><td> 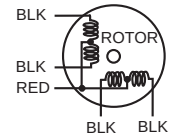
</td></tr>
<tr><td>NAXWST18/24B112AA
NAYWST18/24B112AA
Horizontal vane motor (MV1)
Vertical vane motor (MV2)</td><td>Measure the resistance between the terminals with a multimeter.
(Part temperature 50 ~ 86°F)
<table>
<tr><th></th><th>Color of the lead wire</th><th>Normal</th></tr>
<tr><td></td><td>NAXWST18B112AA</td><td>NAYWST18B112AA</td></tr>
<tr><td>Horizontal vane motor (MV1)</td><td>RED-BLU</td><td>223 - 268 Ω</td></tr>
<tr><td>Vertical vane motor (MV2)</td><td>RED-YLW</td><td>219 - 273 Ω</td></tr>
</table>
<table>
<tr><th></th><th>Color of the lead wire</th><th>Normal</th></tr>
<tr><td></td><td>NAXWST24B112AA</td><td>NAYWST24B112AA</td></tr>
<tr><td>Horizontal vane motor (MV1)</td><td rowspan="2">RED-BLK</td><td>313 - 375 Ω</td></tr>
<tr><td>Vertical vane motor (MV2)</td><td>268 - 322 Ω</td></tr>
</table></td><td>NAXWST18B112AA
NAYWST18B112AA
(MV1)
 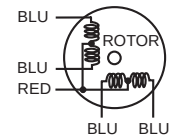

NAXWST18B112AA
NAYWST18B112AA
(MV2)
 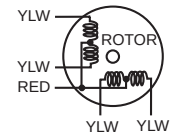

NAXWST24B112AA
NAYWST24B112AA
 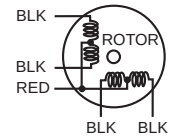
</td></tr>
<tr><td>NAXWST30/36B112AA
NAYWST30/36B112AA
NAXWST30/36C112AA
NAYWST30/36C112AA
Horizontal vane motor (MV1)
Vertical vane motor (MV2, MV3)</td><td>Measure the resistance between the terminals with a multimeter.
(Part temperature 50 ~ 86°F)
<table>
<tr><th></th><th>Color of the lead wire</th><th>Normal</th></tr>
<tr><td>Horizontal vane motor (MV1)</td><td rowspan="2">RED - SKY*</td><td>240 - 260 Ω</td></tr>
<tr><td>Vertical vane motor (MV2, MV3)</td><td>282 - 306 Ω</td></tr>
</table></td><td> 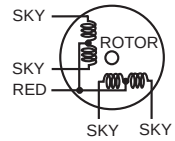
</td></tr>
</table>

*SKY = SKY BLUE

9-6. TROUBLESHOOTING FLOW

Ⓐ Check of indoor fan motor

NAXWST06/09/12/15/18B112AA
NAYWST09/12/15/18B112AA

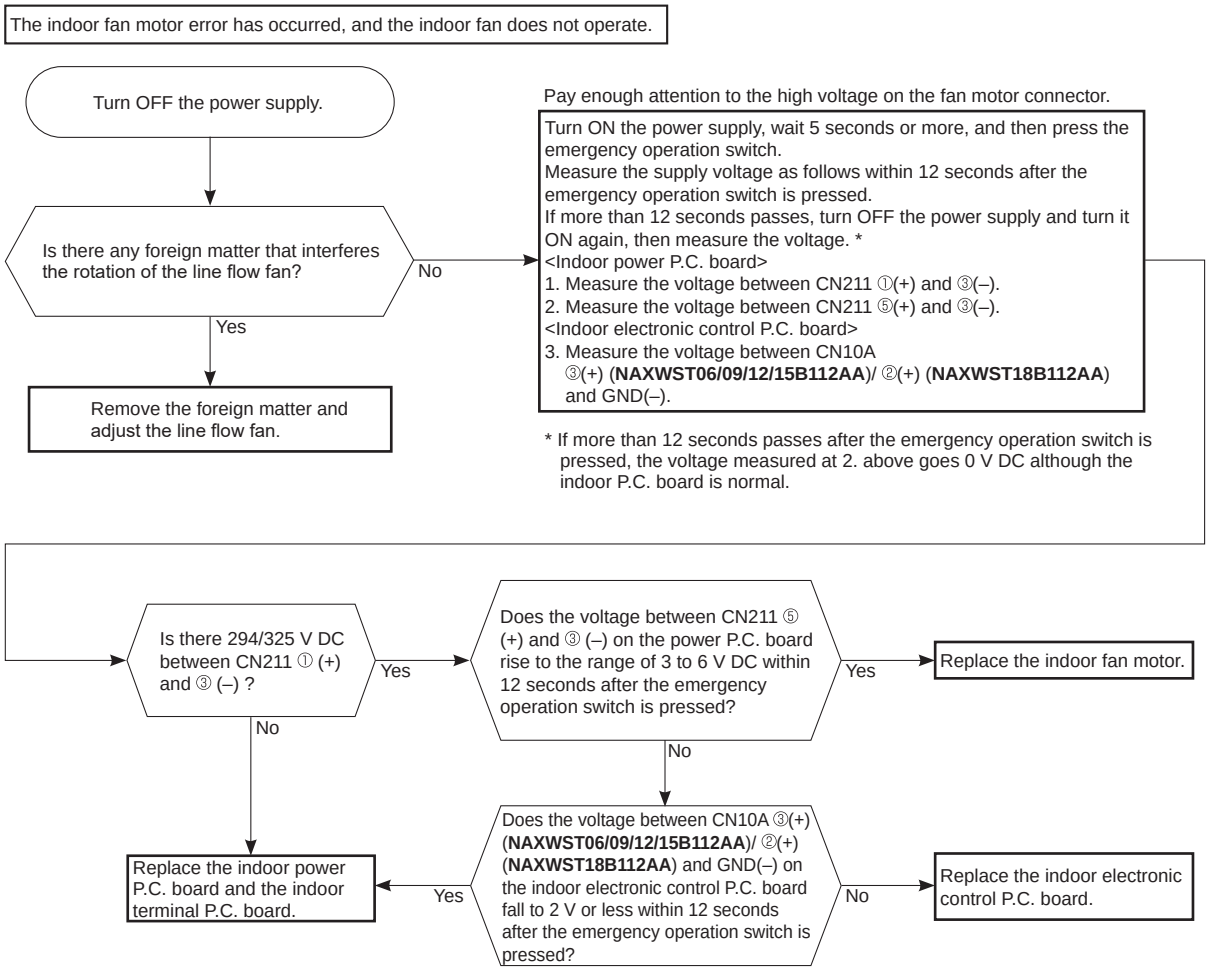

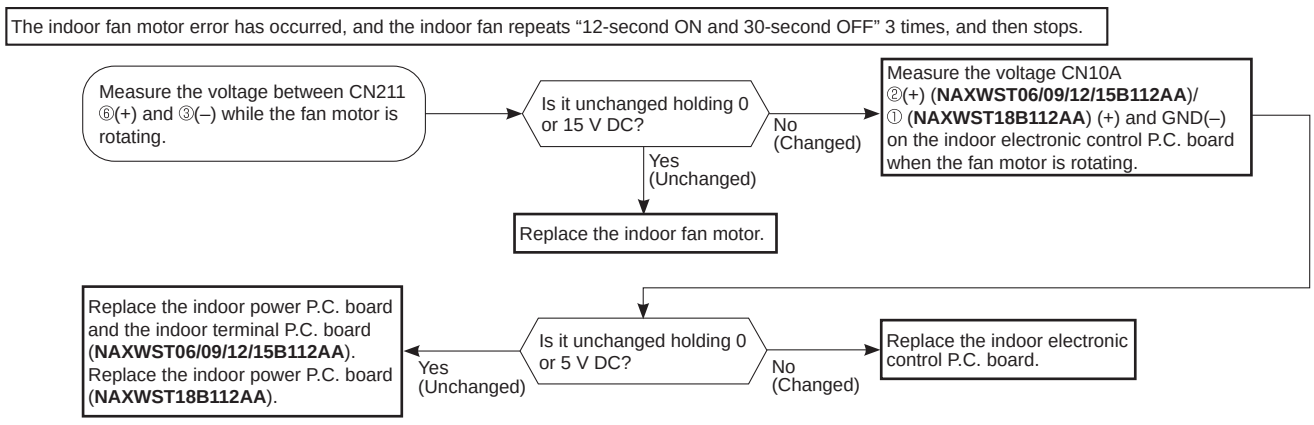

NAXWST24B112AA
NAYWST24B112AA

The indoor fan motor error has occurred, and the indoor fan does not operate.

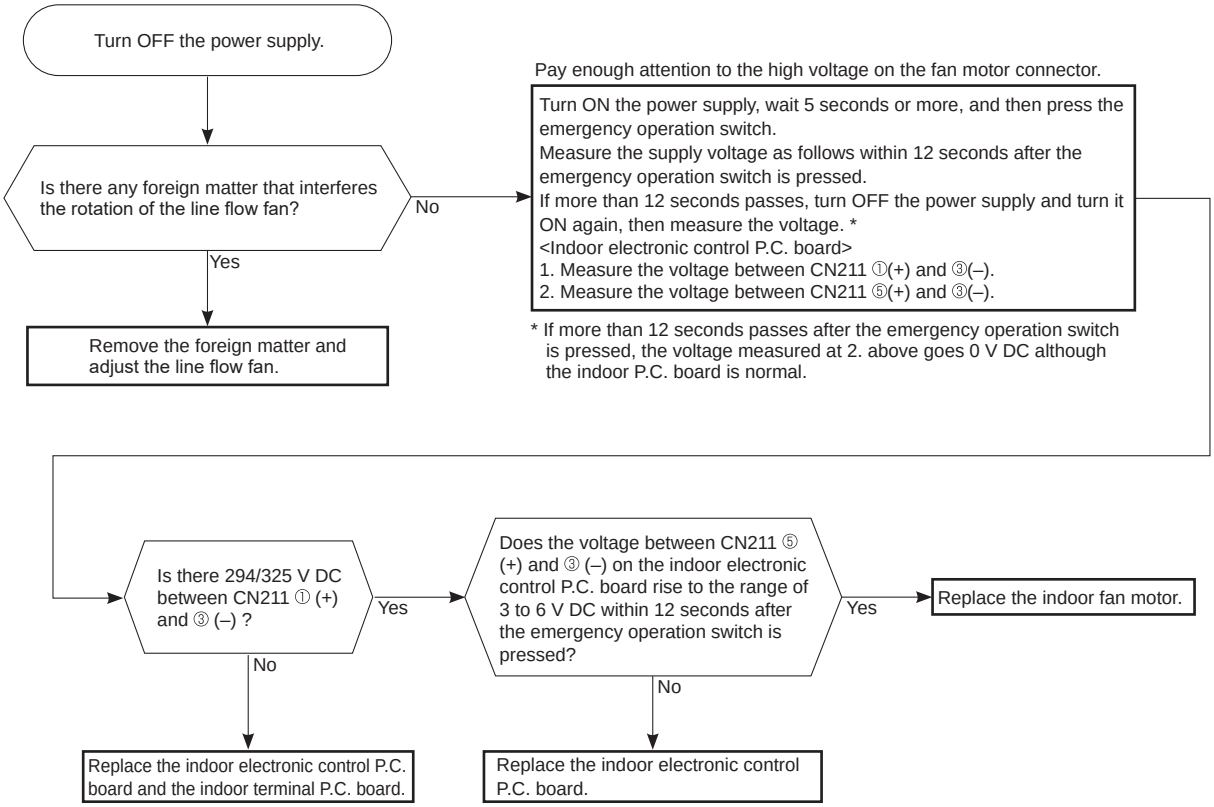

The indoor fan motor error has occurred, and the indoor fan repeats “12-second ON and 30-second OFF” 3 times, and then stops.

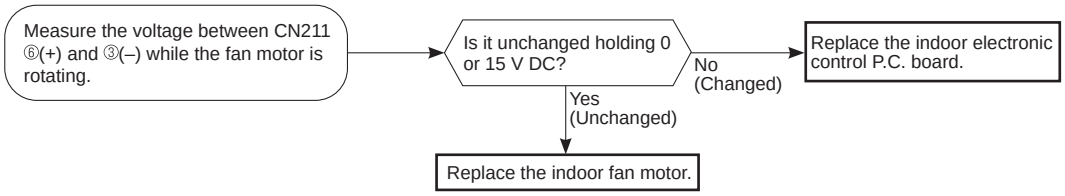

NAXWST30/36B112AA NAXWST30/36C112AA
NAYWST30/36B112AA NAYWST30/36C112AA

The indoor fan motor error has occurred, and the indoor fan does not operate.

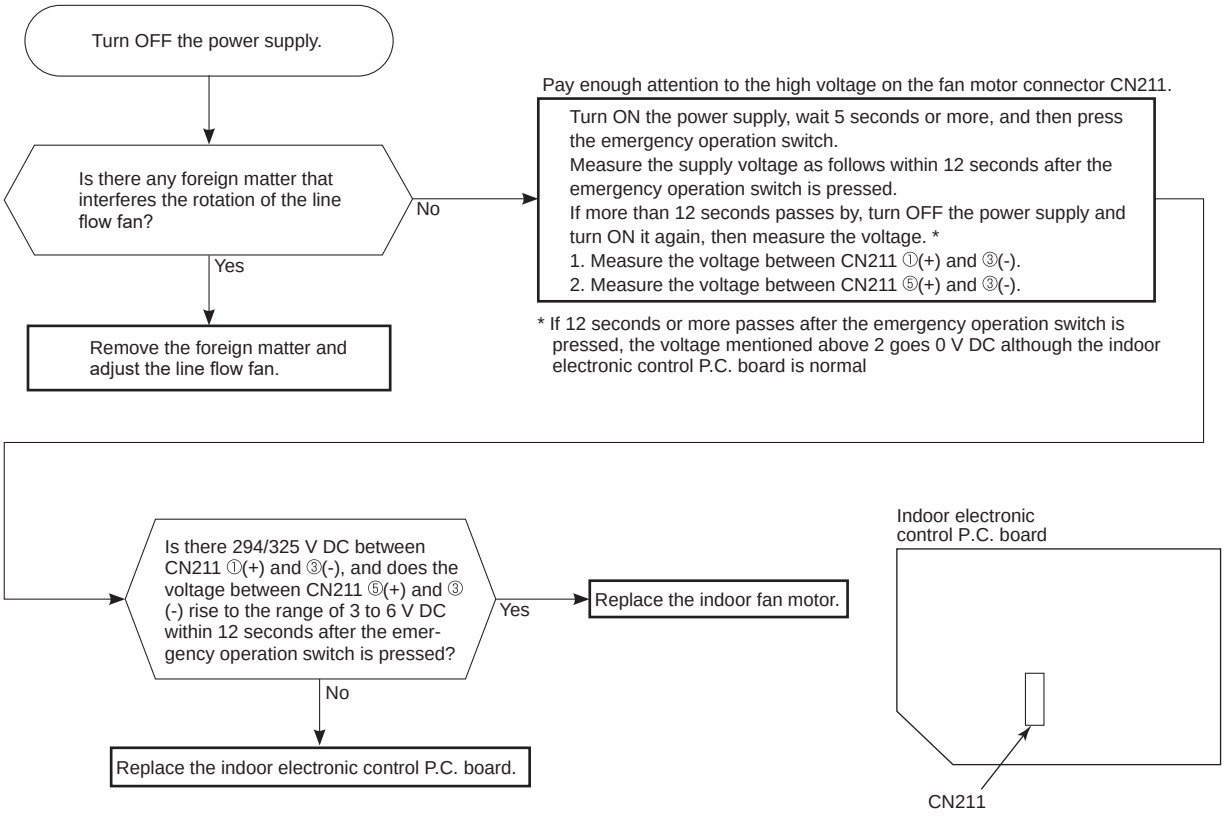

The indoor fan motor error has occurred, and the indoor fan repeats “12-second ON and 30-second OFF” 3 times, and then stops.

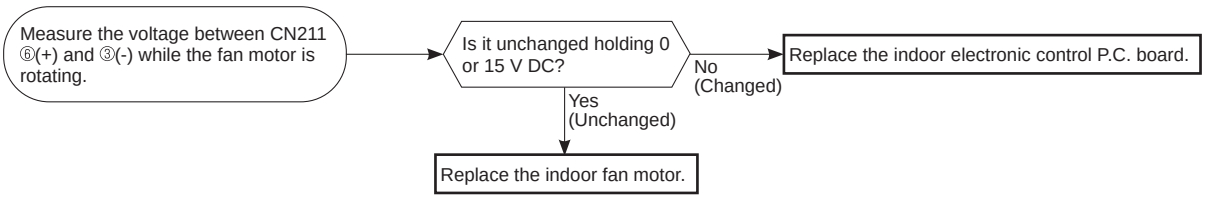

Ⓑ Check of remote controller and receiver P.C. board

Check if the remote controller is exclusive for this air conditioner.

NAXWST06/09/12/15/18B112AA
NAYWST09/12/15/18B112AA

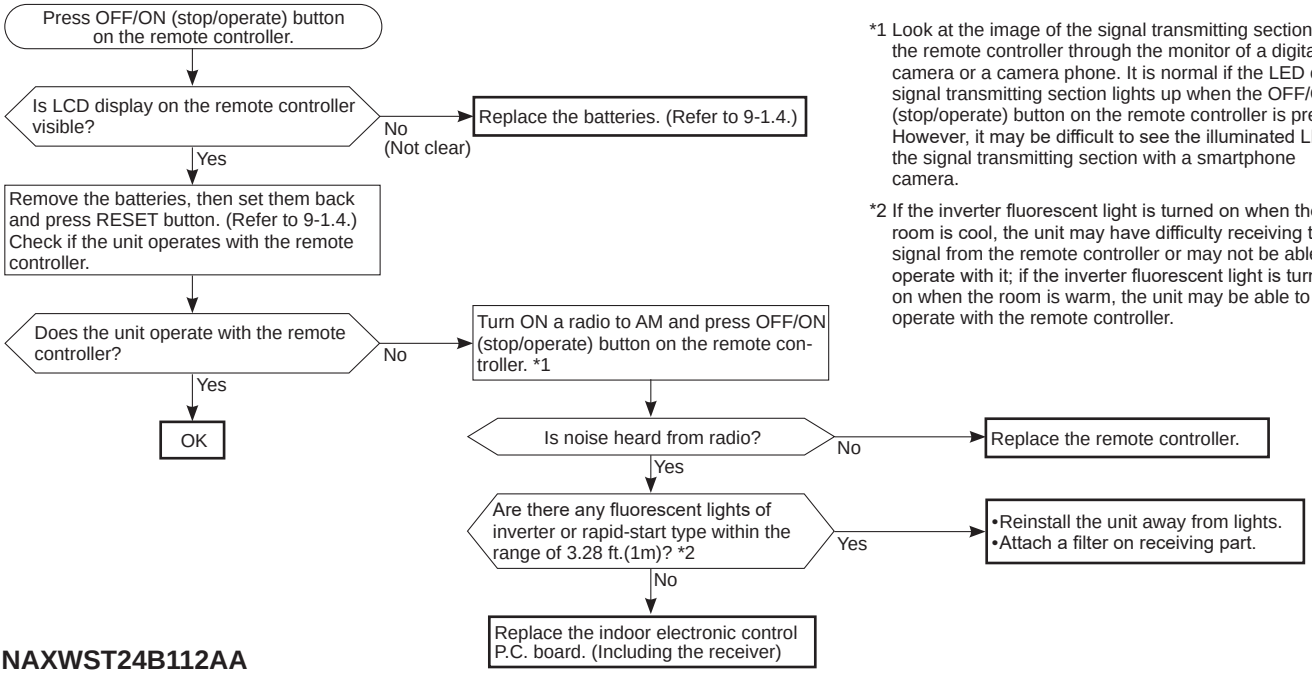

*1 Look at the image of the signal transmitting section of the remote controller through the monitor of a digital camera or a camera phone. It is normal if the LED of the signal transmitting section lights up when the OFF/ON (stop/operate) button on the remote controller is pressed. However, it may be difficult to see the illuminated LED of the signal transmitting section with a smartphone camera.

*2 If the inverter fluorescent light is turned on when the room is cool, the unit may have difficulty receiving the signal from the remote controller or may not be able to operate with it; if the inverter fluorescent light is turned on when the room is warm, the unit may be able to operate with the remote controller.

NAXWST24B112AA
NAYWST24B112AA

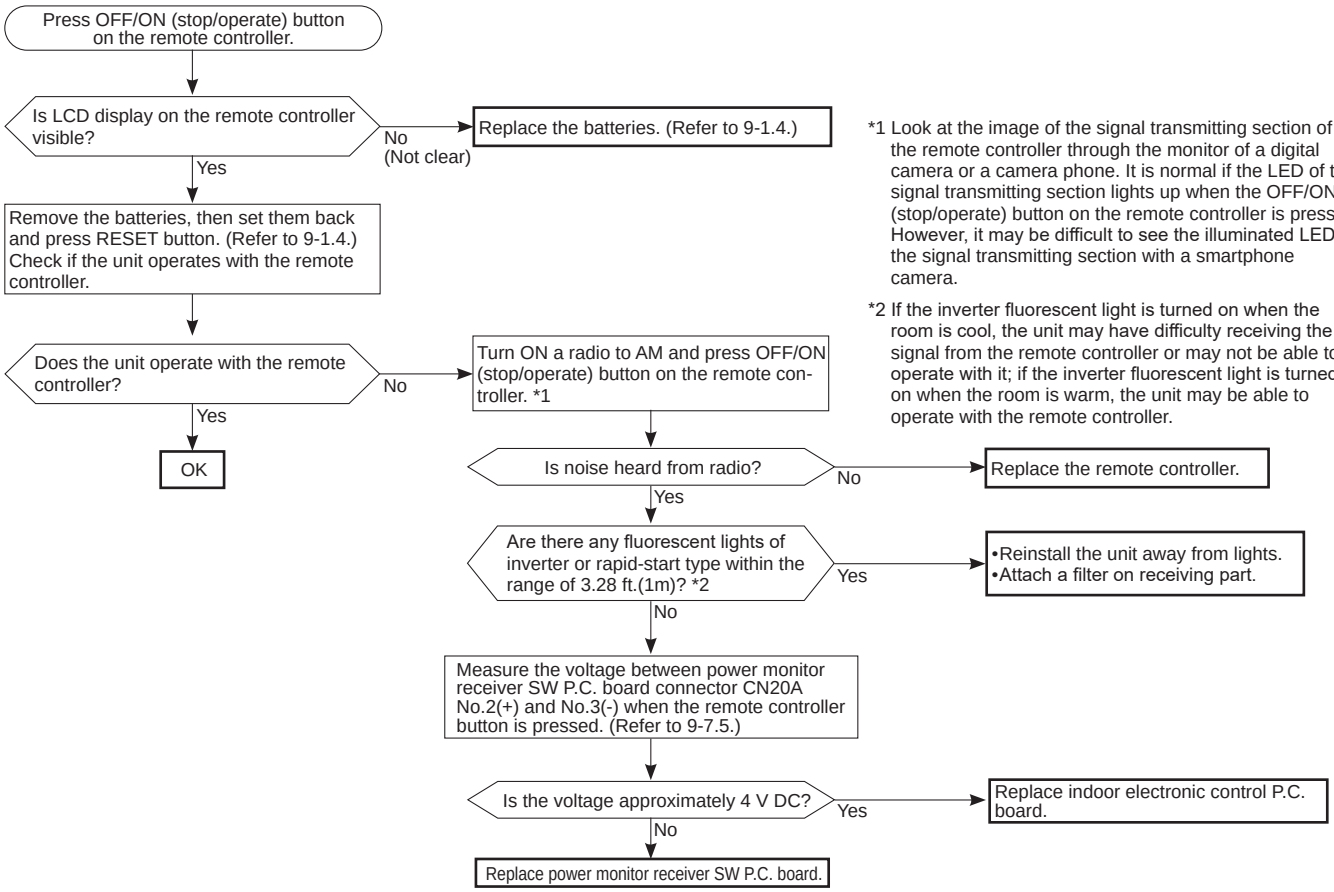

*1 Look at the image of the signal transmitting section of the remote controller through the monitor of a digital camera or a camera phone. It is normal if the LED of the signal transmitting section lights up when the OFF/ON (stop/operate) button on the remote controller is pressed. However, it may be difficult to see the illuminated LED of the signal transmitting section with a smartphone camera.

*2 If the inverter fluorescent light is turned on when the room is cool, the unit may have difficulty receiving the signal from the remote controller or may not be able to operate with it; if the inverter fluorescent light is turned on when the room is warm, the unit may be able to operate with the remote controller.

Check if the remote controller is exclusive for this air conditioner.

NAXWST30/36B112AA NAXWST30/36C112AA
NAYWST30/36B112AA NAYWST30/36C112AA

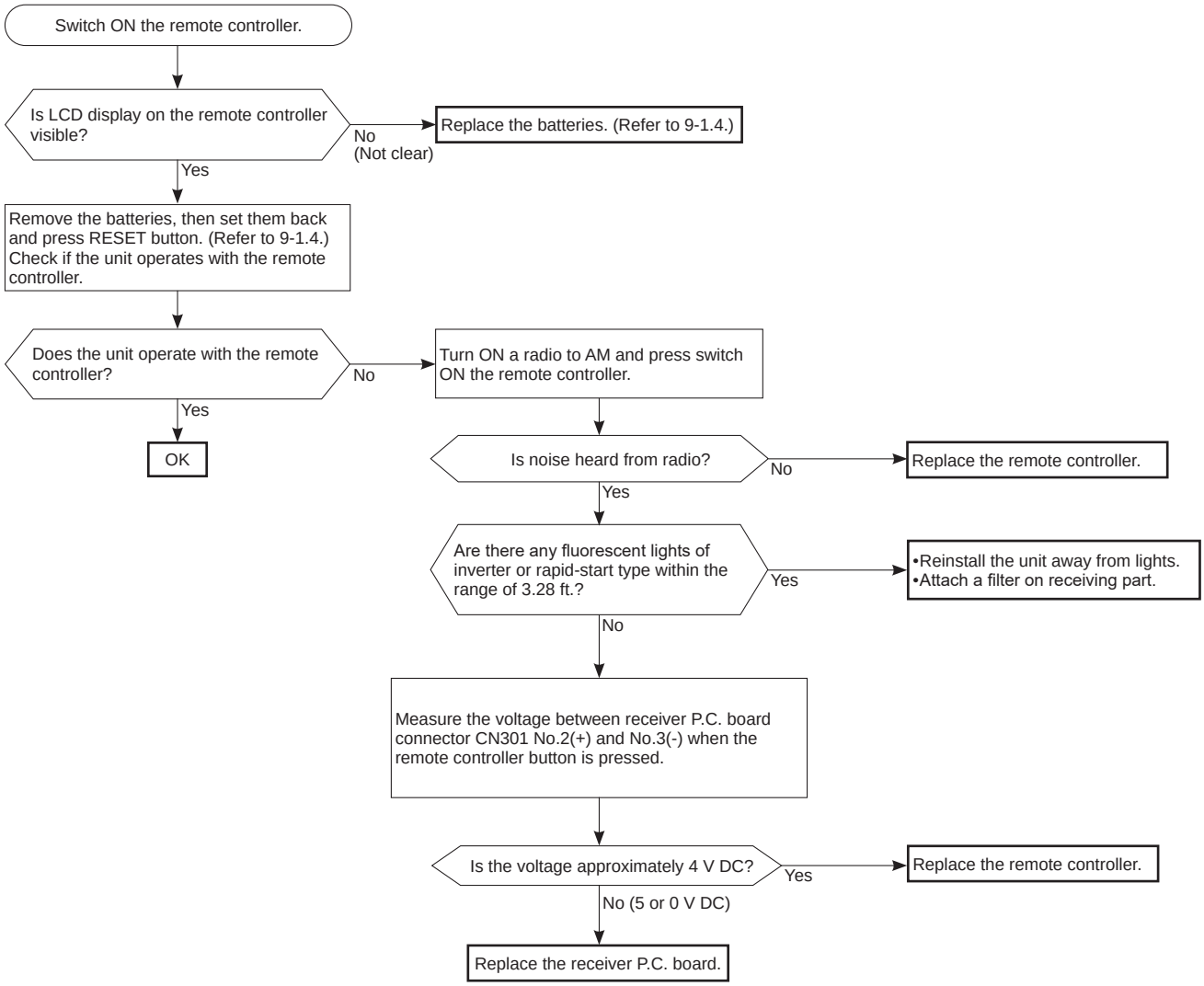

Ⓒ Check of indoor electronic control P.C. board and indoor fan motor

NAXWST06/09/12/15B112AA
NAYWST09/12/15B112AA

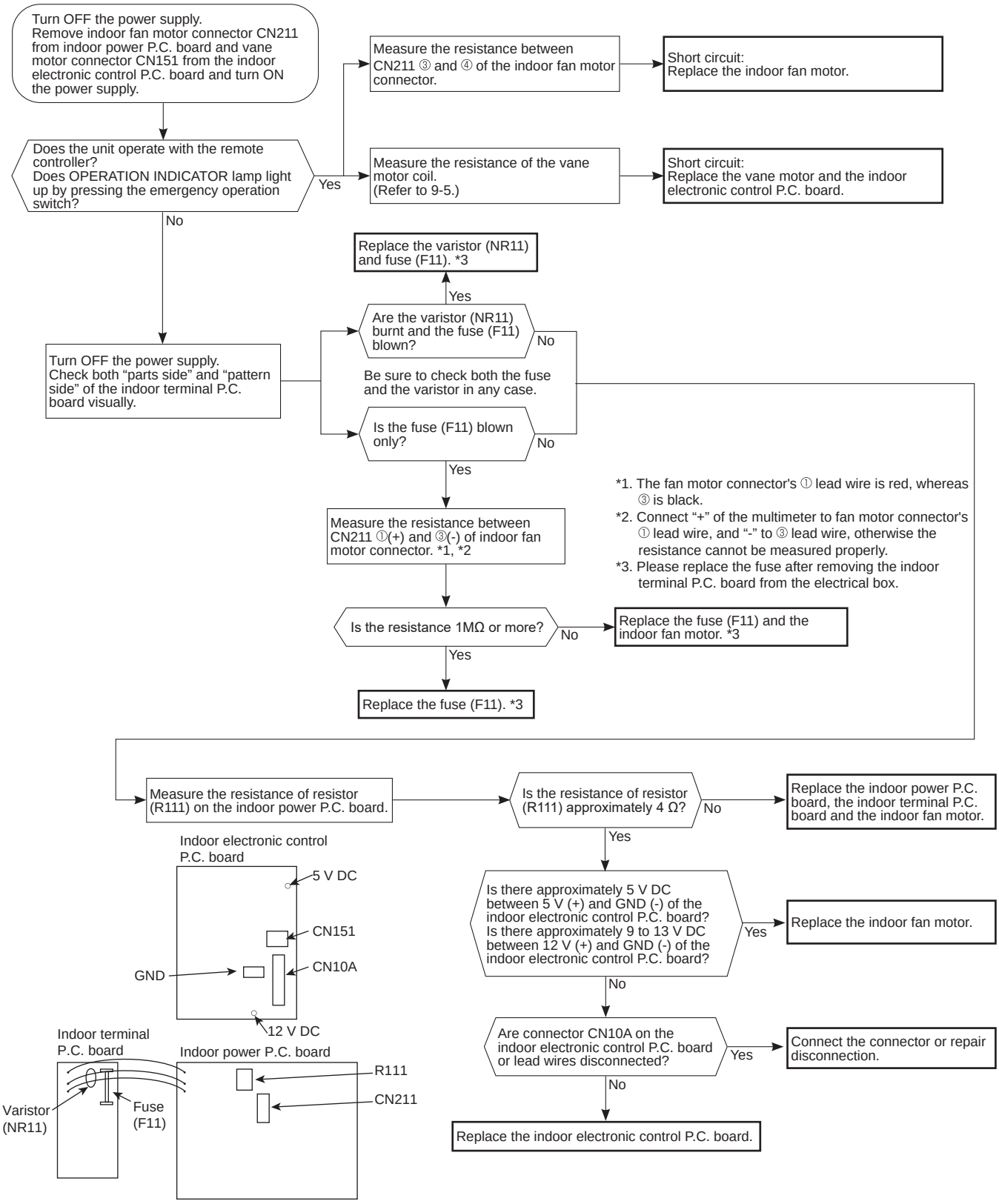

NAXWST18B112AA
NAYWST18B112AA

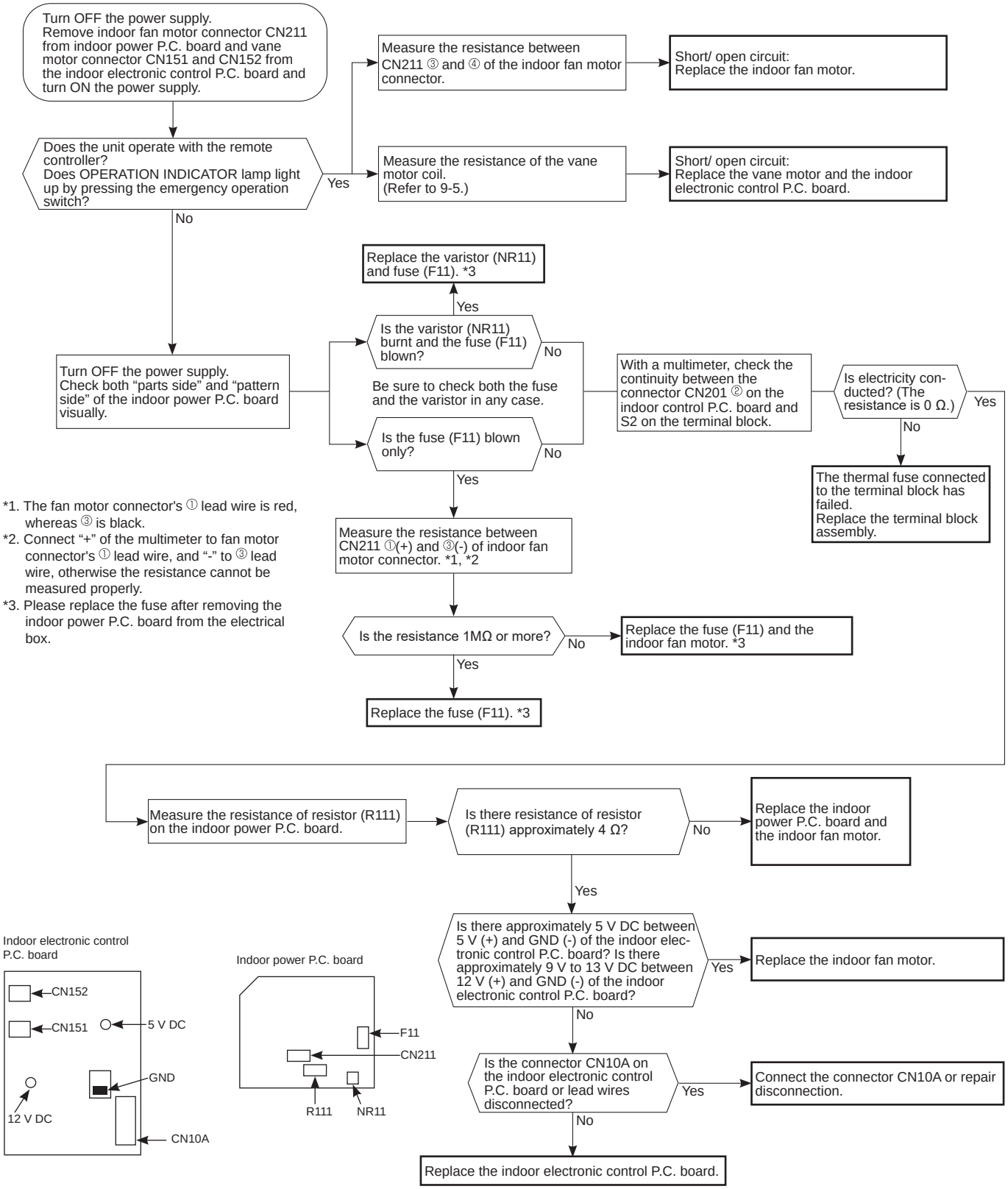

*1. The fan motor connector's ① lead wire is red, whereas ③ is black.
*2. Connect "+" of the multimeter to fan motor connector's ① lead wire, and "-" to ③ lead wire, otherwise the resistance cannot be measured properly.
*3. Please replace the fuse after removing the indoor power P.C. board from the electrical box.

NAXWST24B112AA
NAYWST24B112AA

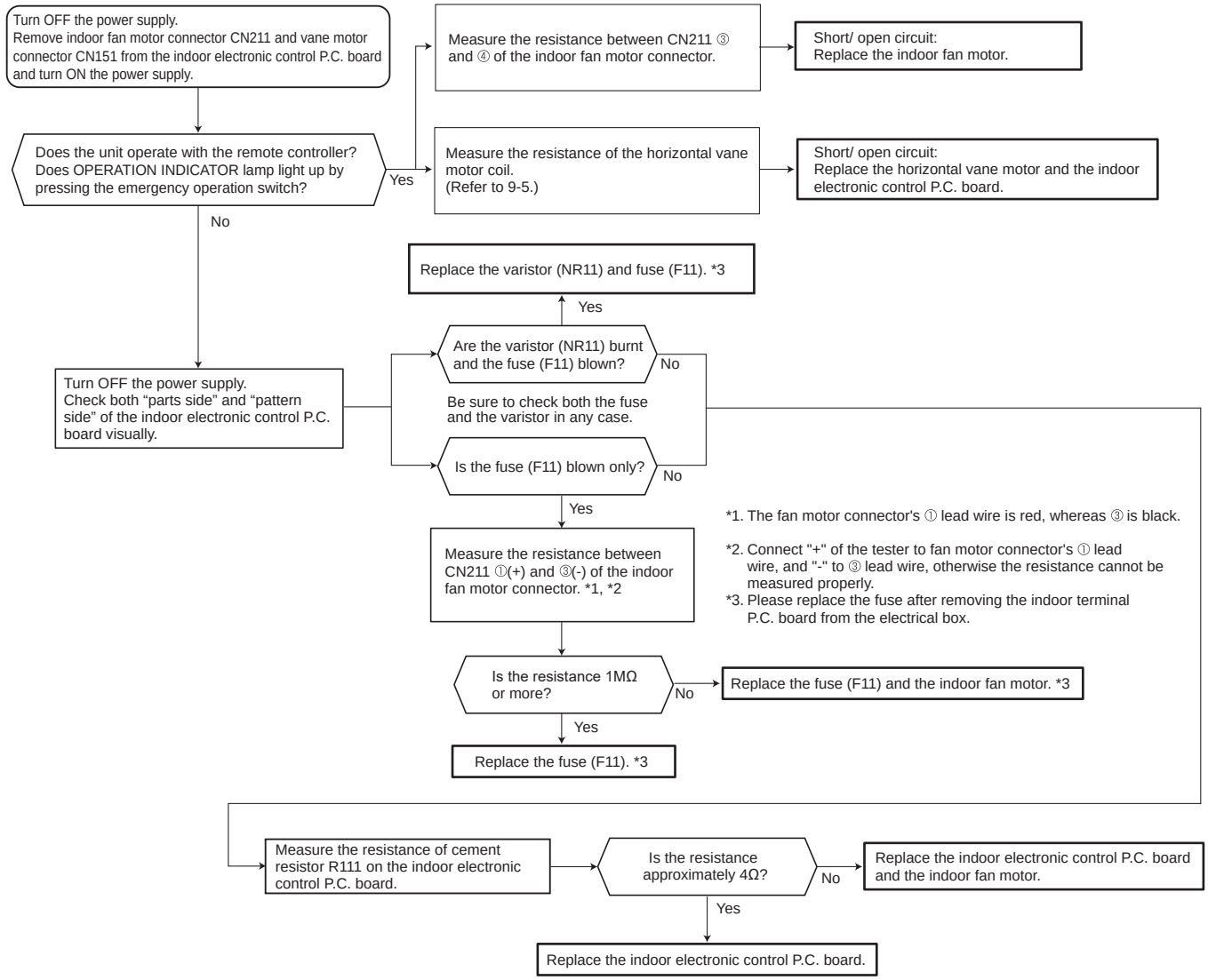

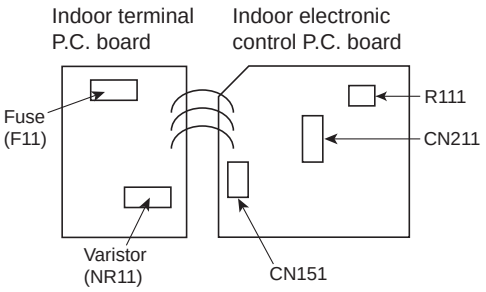

NAXWST30/36B112AA NAXWST30/36C112AA
NAYWST30/36B112AA NAYWST30/36C112AA

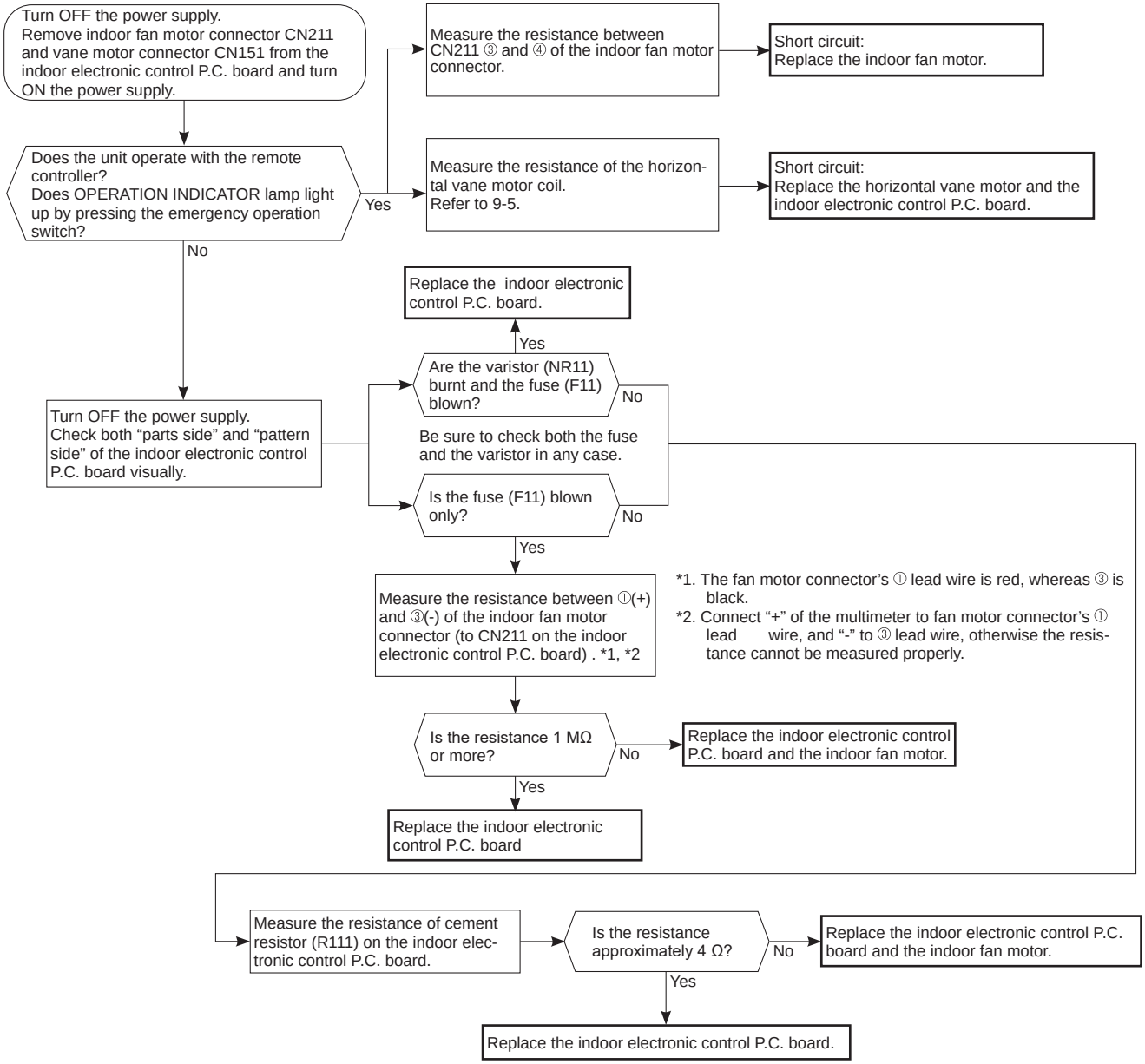

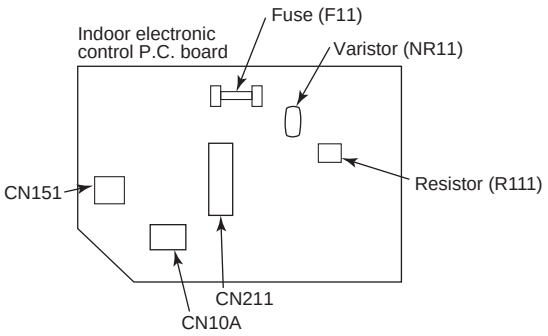

Ⓓ How to check miswiring and serial signal error

NAXWST06/09/12/15B112AA
NAYWST09/12/15B112AA

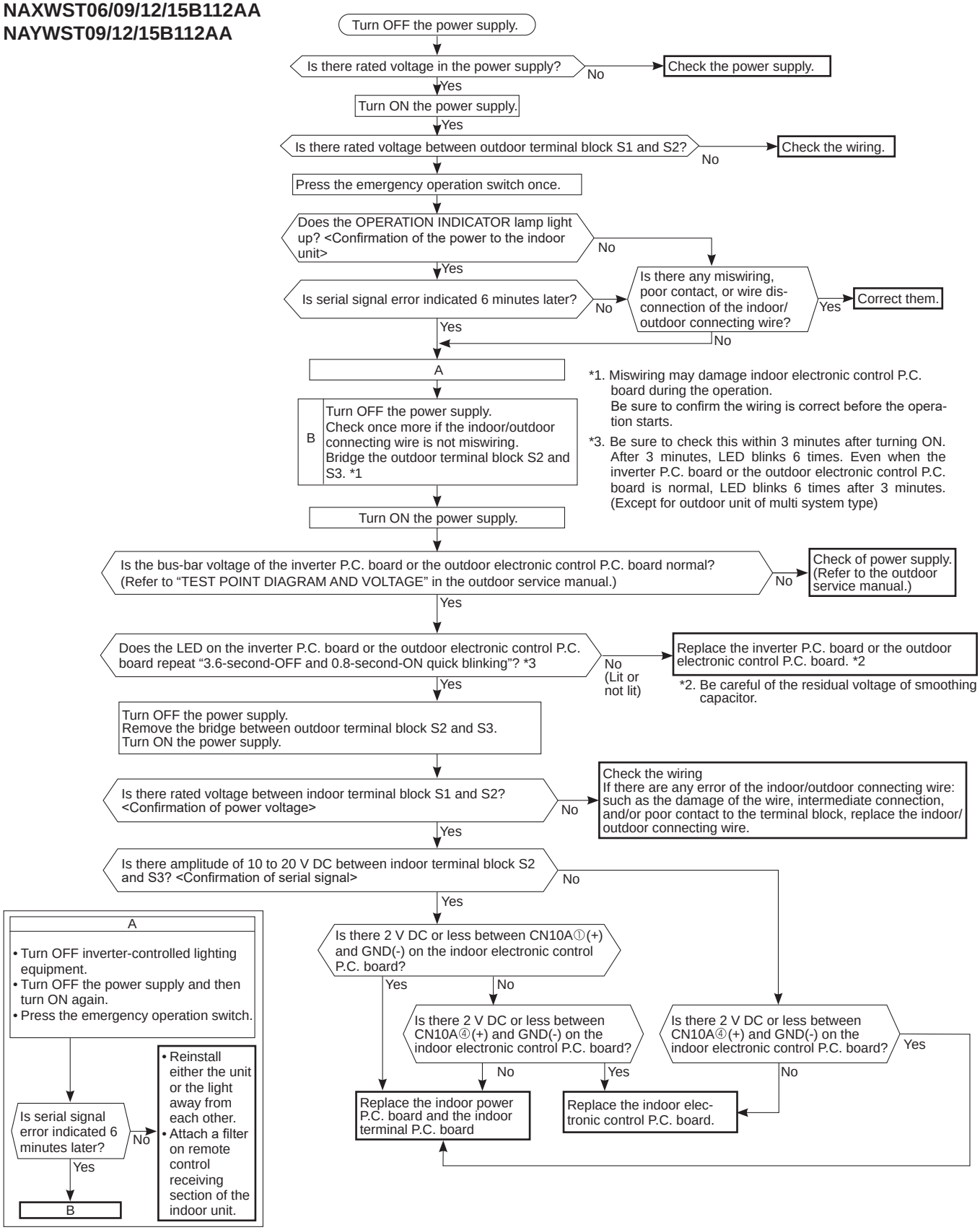

*1. Miswiring may damage indoor electronic control P.C. board during the operation.
Be sure to confirm the wiring is correct before the operation starts.

*3. Be sure to check this within 3 minutes after turning ON. After 3 minutes, LED blinks 6 times. Even when the inverter P.C. board or the outdoor electronic control P.C. board is normal, LED blinks 6 times after 3 minutes. (Except for outdoor unit of multi system type)

*2. Be careful of the residual voltage of smoothing capacitor.

NAXWST18/24B112AA
NAYWST18/24B112AA

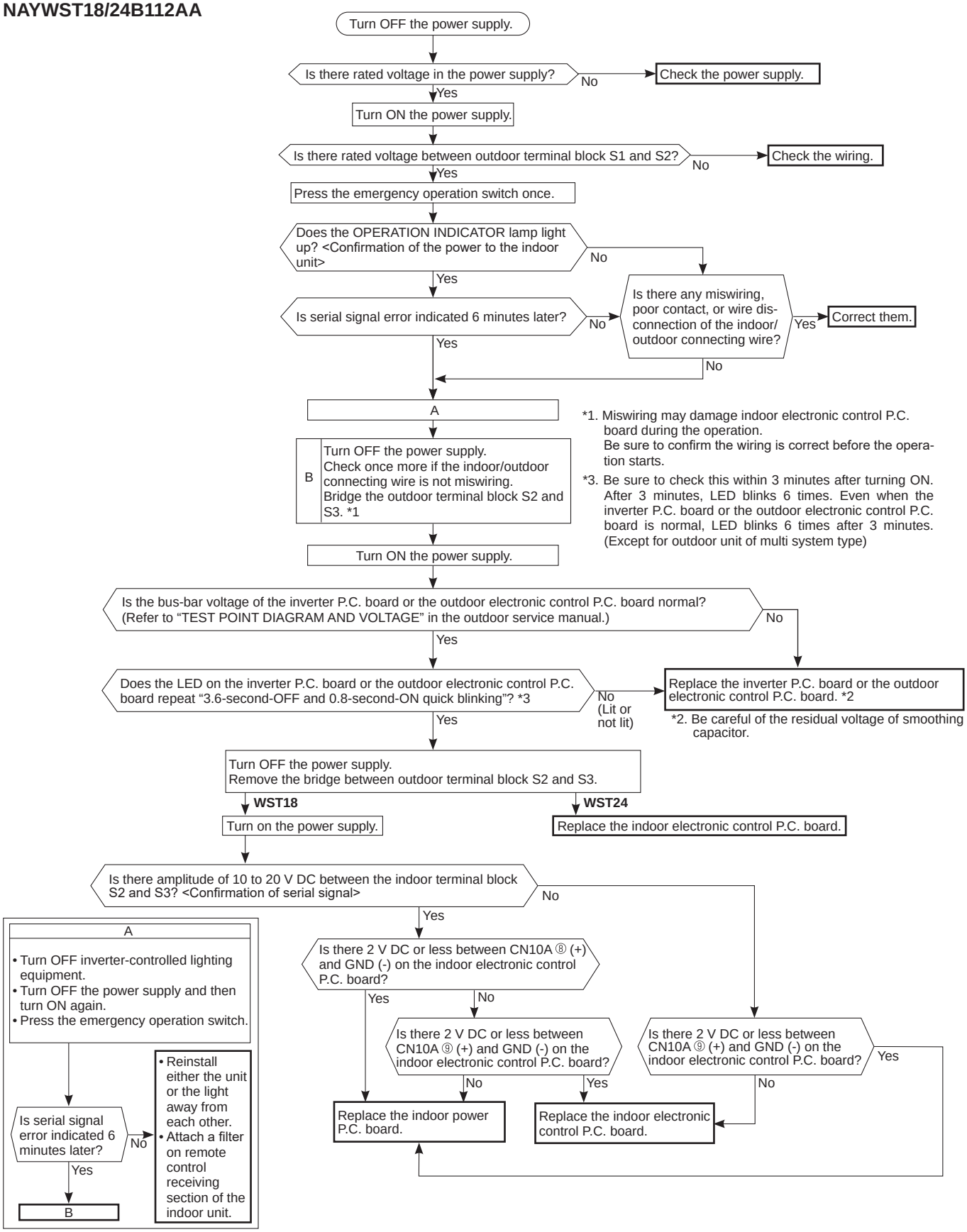

NAXWST30/36B112AA
NAYWST30/36B112AA
NAXWST30/36C112AA
NAYWST30/36C112AA

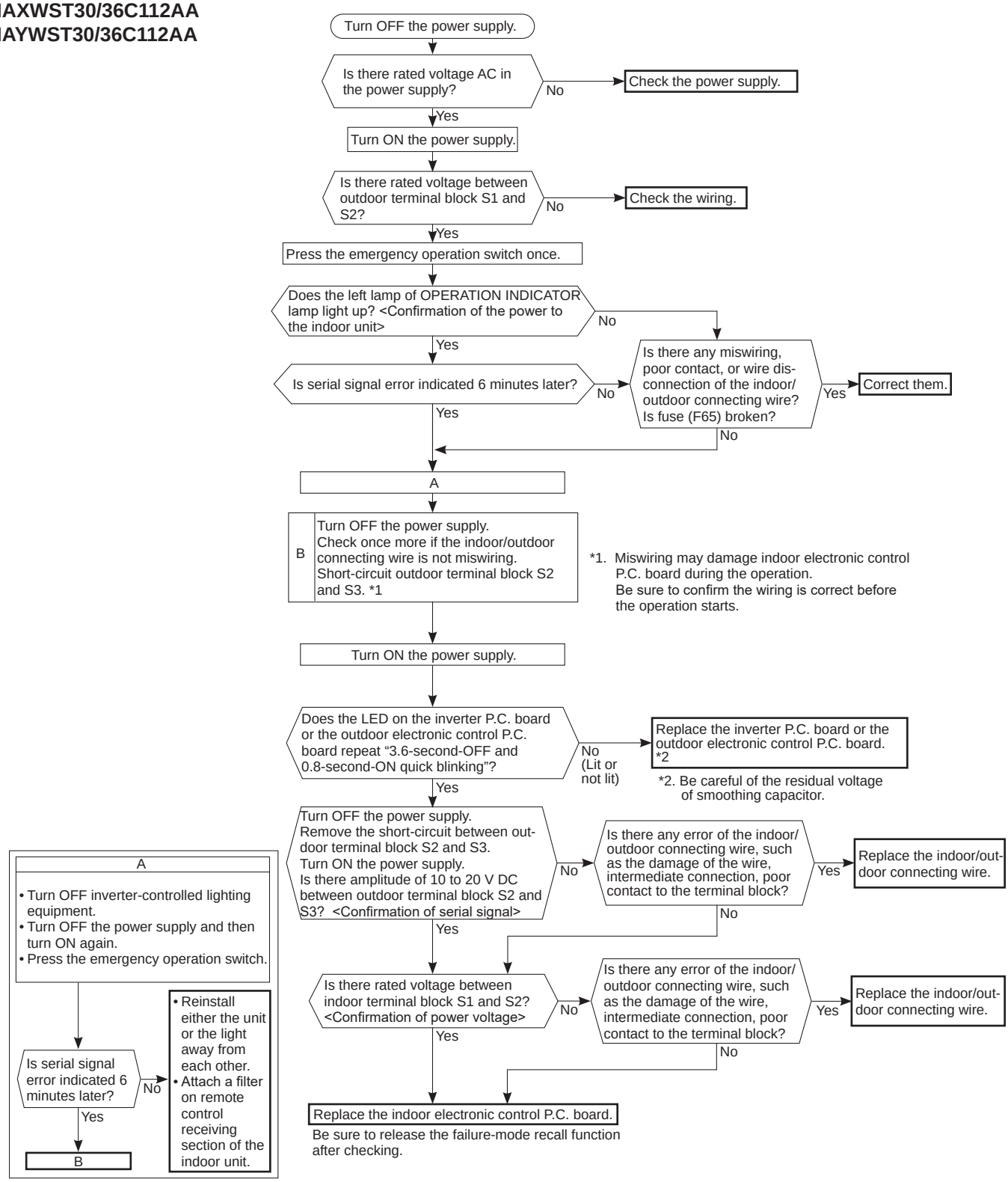

Ⓔ Electromagnetic noise enters into TV sets or radios

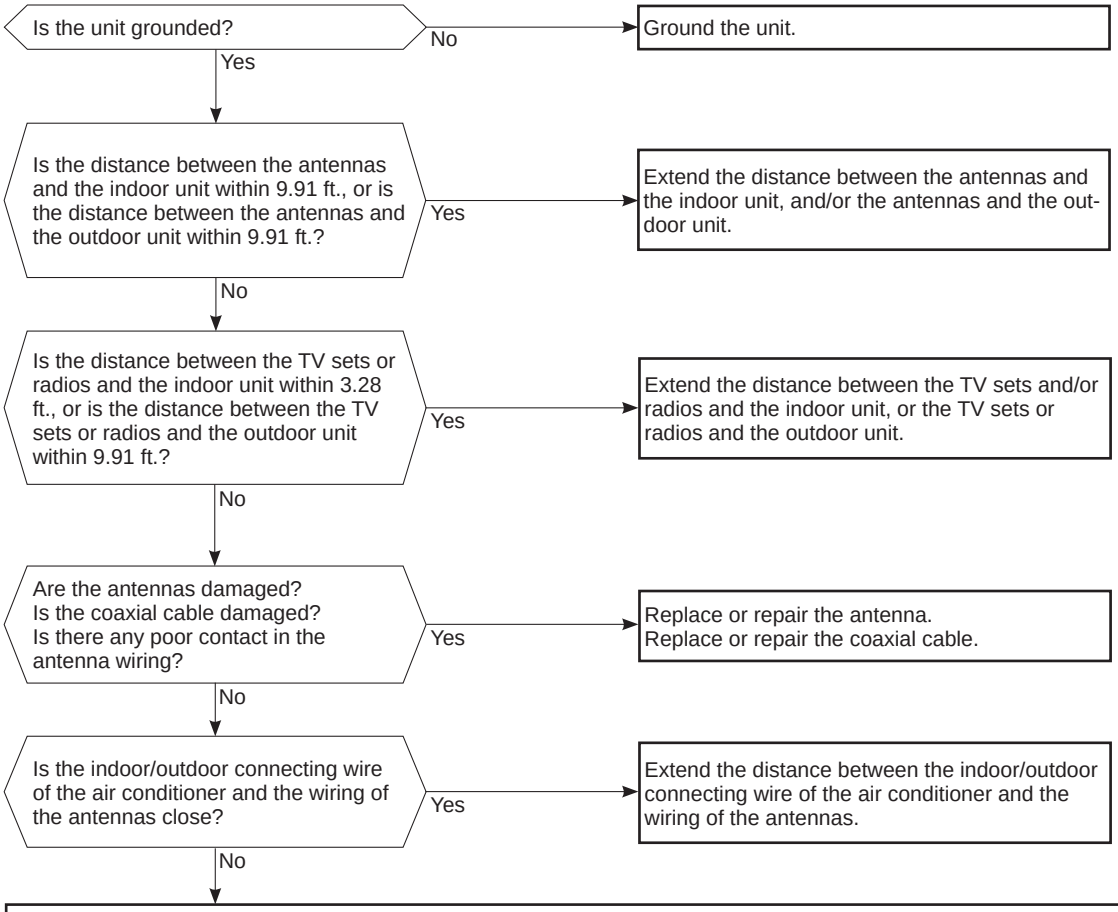

Even if all of the above conditions are fulfilled, the electromagnetic noise may enter, depending on the electric field strength or the installation condition (combination of specific conditions such as antennas or wiring).
Check the followings before asking for service.

1. Devices affected by the electromagnetic noise
   TV sets, radios (FM/AM broadcast, shortwave)
2. Channel, frequency, broadcast station affected by the electromagnetic noise
3. Channel, frequency, broadcast station unaffected by the electromagnetic noise
4. Layout of ;
   indoor/outdoor unit of the air conditioner, indoor/outdoor wiring, grounding wire, antennas, wiring from antennas, receiver
5. Electric field intensity of the broadcast station affected by the electromagnetic noise
6. Presence or absence of amplifier such as booster
7. Operation condition of air conditioner when the electromagnetic noise enters in
   1) Turn OFF the power supply once, and then turn ON the power supply. In this situation, check for the electromagnetic noise.
   2) Within 3 minutes after turning ON the power supply, press OFF/ON (stop/operate) button on the remote controller for power ON, and check for the electromagnetic noise.
   3) After a short time (3 minutes later after turning ON), the outdoor unit starts running. During operation, check for the electromagnetic noise.
   4) Press OFF/ON (stop/operate) button on the remote controller for power OFF, when the outdoor unit stops but the indoor/outdoor communication still runs on. In this situation, check for the electromagnetic noise.

9-7. TEST POINT DIAGRAM AND VOLTAGE

NAXWST06B112AA NAXWST09B112AA NAXWST12B112AA NAXWST15B112AA NAYWST09B112AA NAYWST12B112AA NAYWST15B112AA

1. Indoor power P.C. board, Indoor terminal P.C. board

Indoor terminal P.C. board **Indoor power P.C. board**

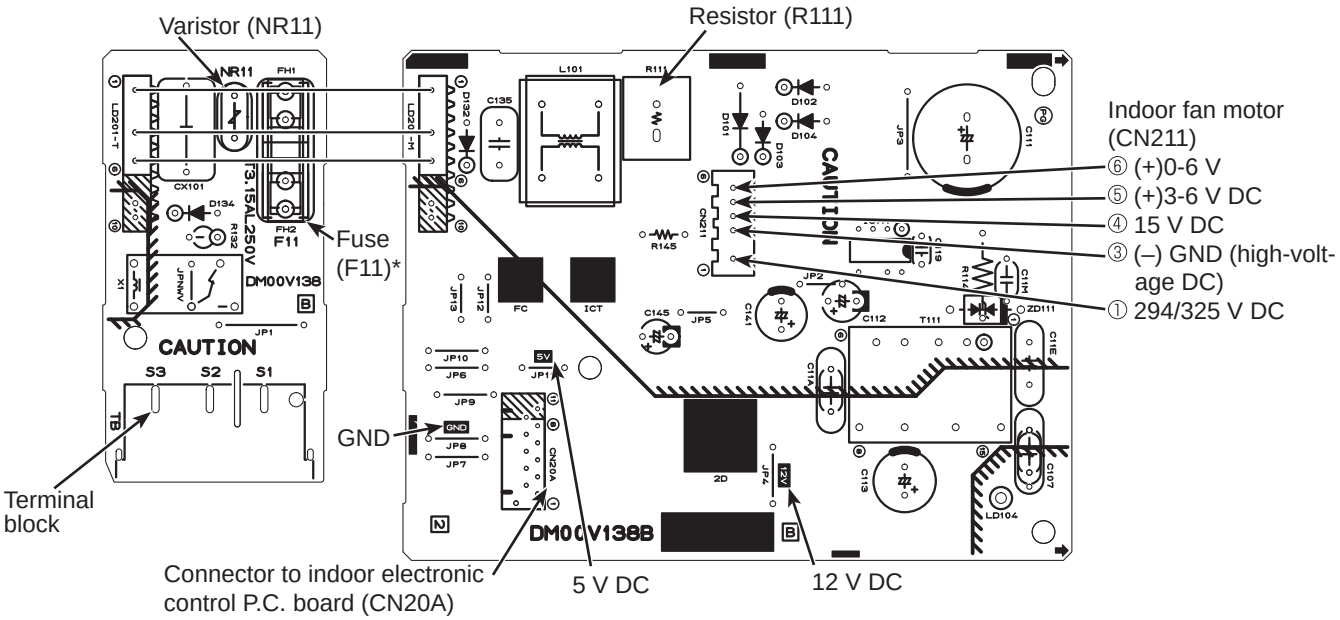

*Please replace the fuse after removing the indoor terminal P.C. board from the electrical box.

2. Indoor electronic control P.C. board

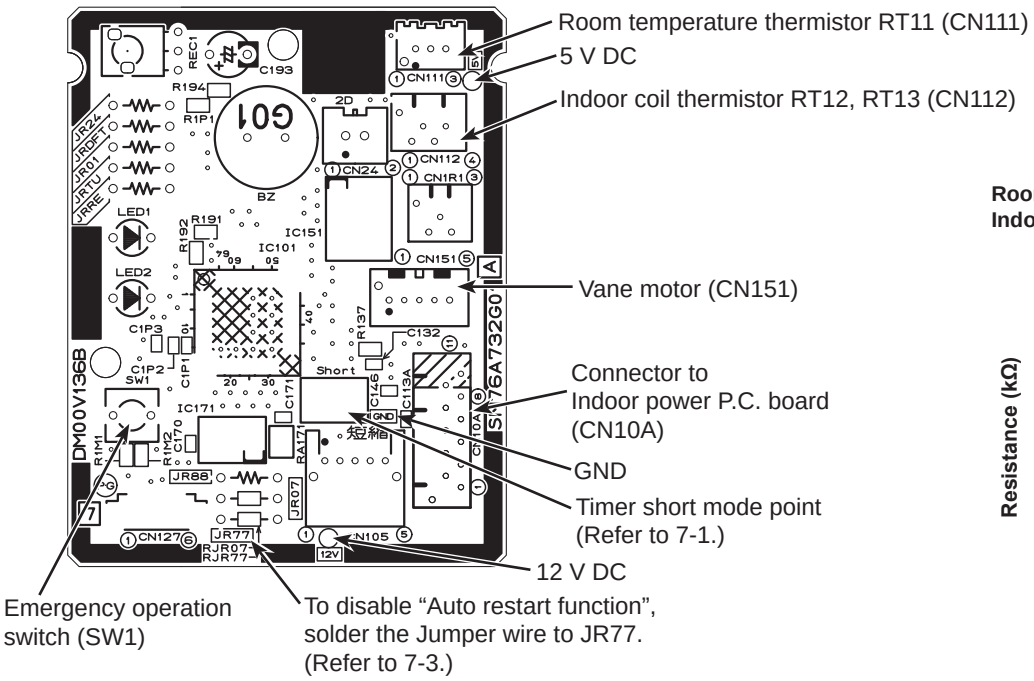

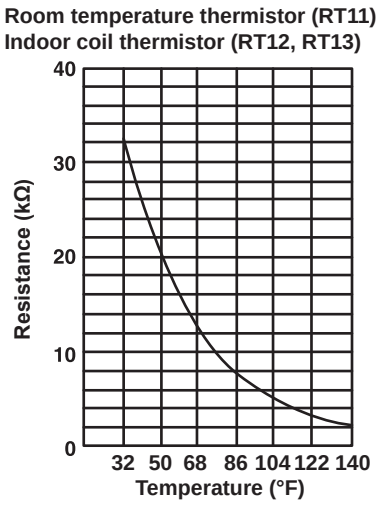

NAXWST18B112AA NAYWST18B112AA

3. Indoor power P.C. board

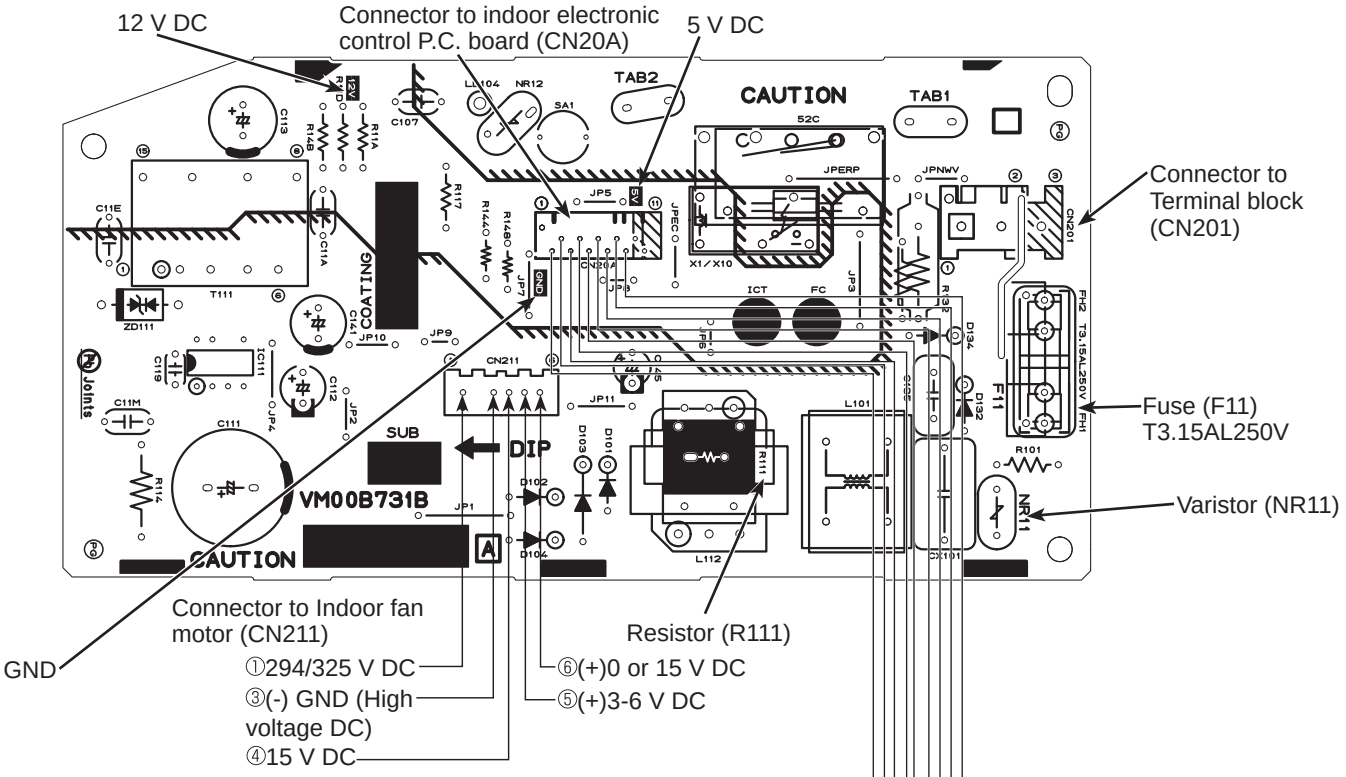

4. Indoor electronic control P.C. board

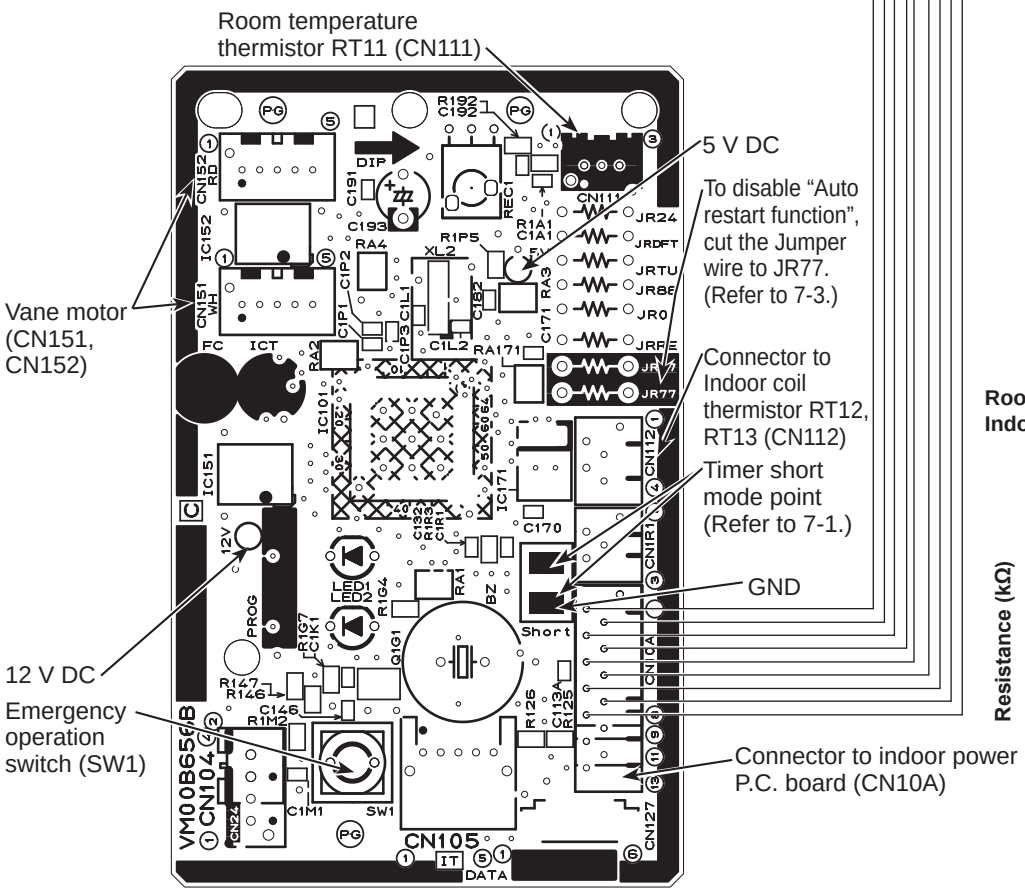

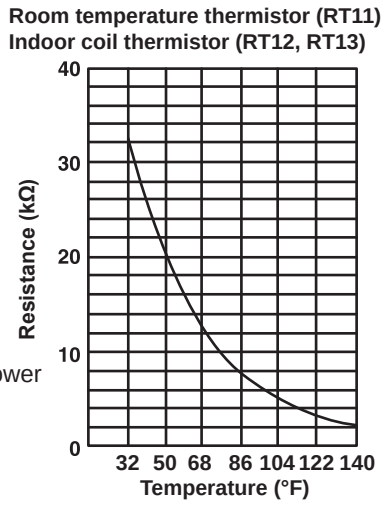

NAXWST24B112AA NAYWST24B112AA

5. Indoor terminal P.C. board, Indoor electronic control P.C. board, Power monitor receiver SW P.C. board

Indoor terminal P.C. board **Indoor electronic control P.C. board**

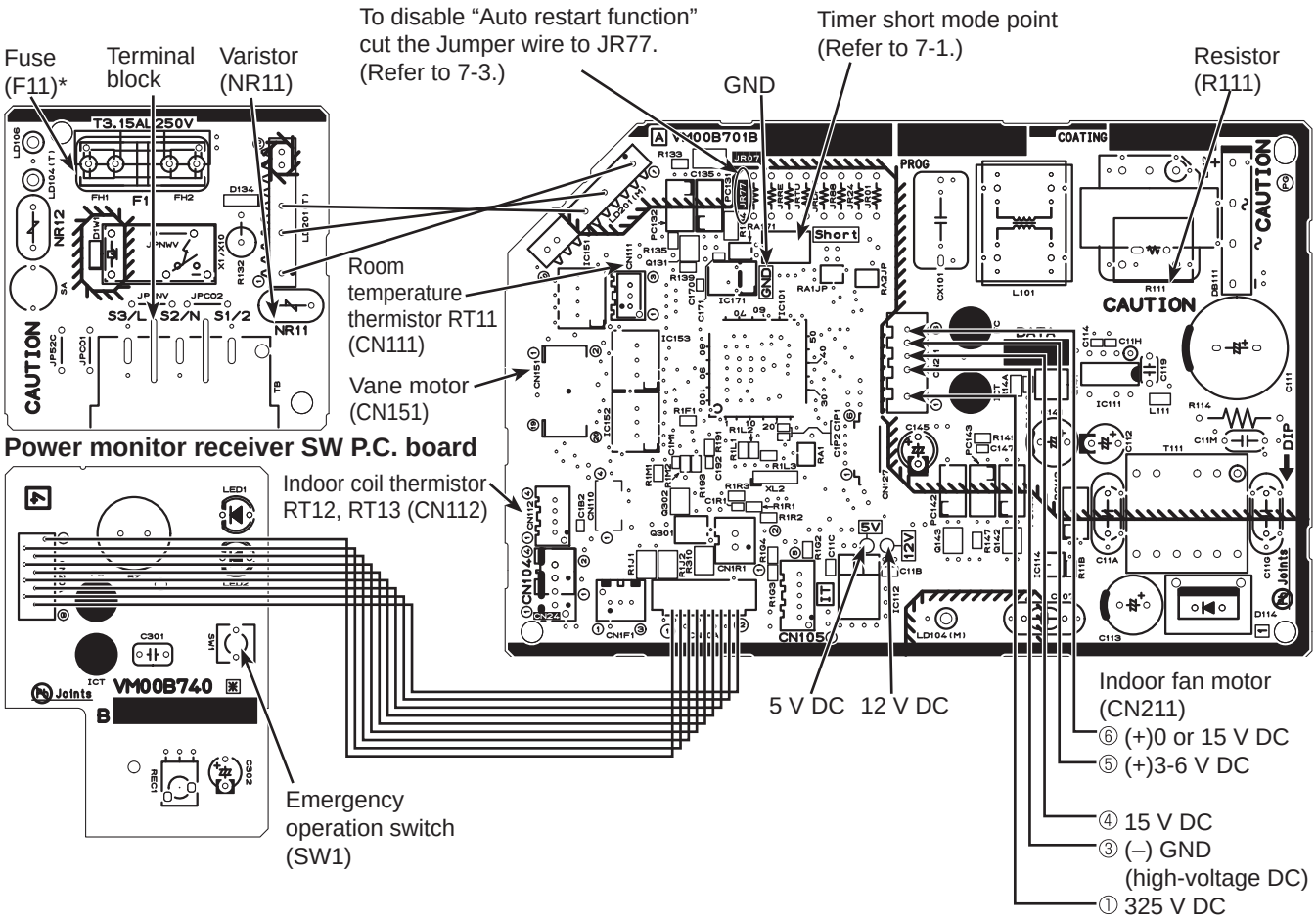

*Please replace the fuse after removing the indoor terminal P.C. board from the electrical box.

Room temperature thermistor (RT11)
Indoor coil thermistor (RT12, RT13)

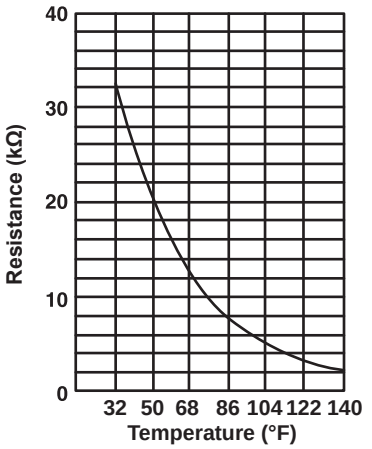

NAXWST30B112AA NAXWST36B112AA NAYWST30B112AA NAYWST36B112AA

6. Indoor electronic control P.C. board, switch P.C. board, display P.C. board, power monitor receiver P.C. board

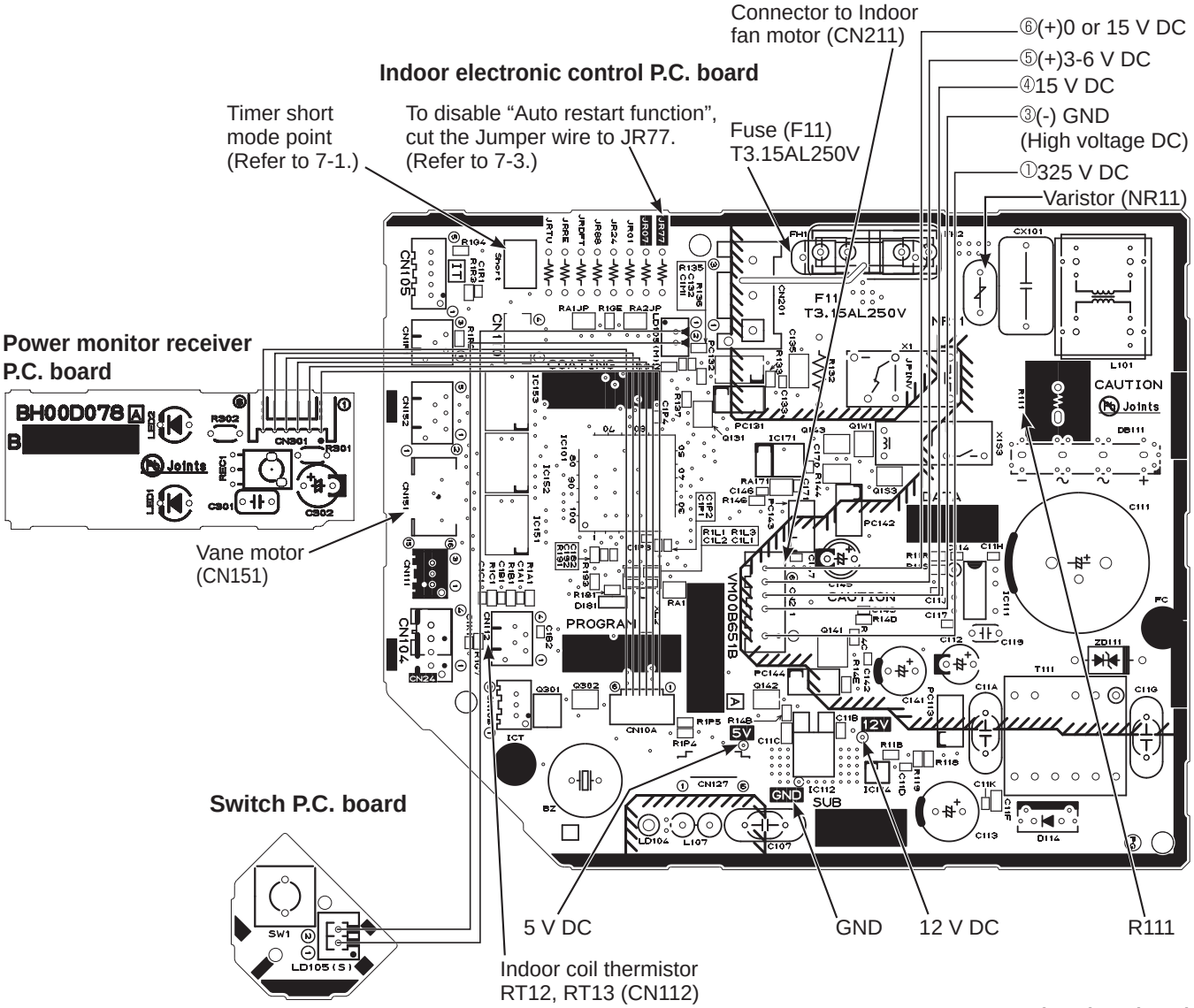

Room temperature thermistor (RT11)
Indoor coil thermistor (RT12, RT13)

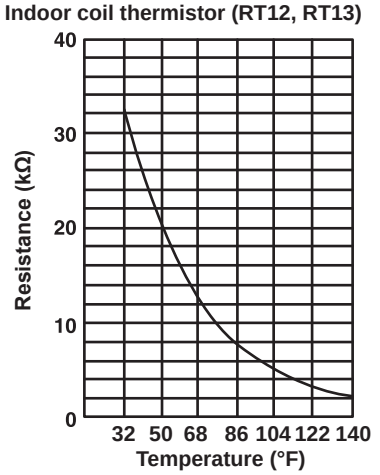

NAXWST30C112AA NAXWST36C112AA NAYWST30C112AA NAYWST36C112AA

7. Indoor electronic control P.C. board, switch P.C. board, display P.C. board, power monitor receiver P.C. board

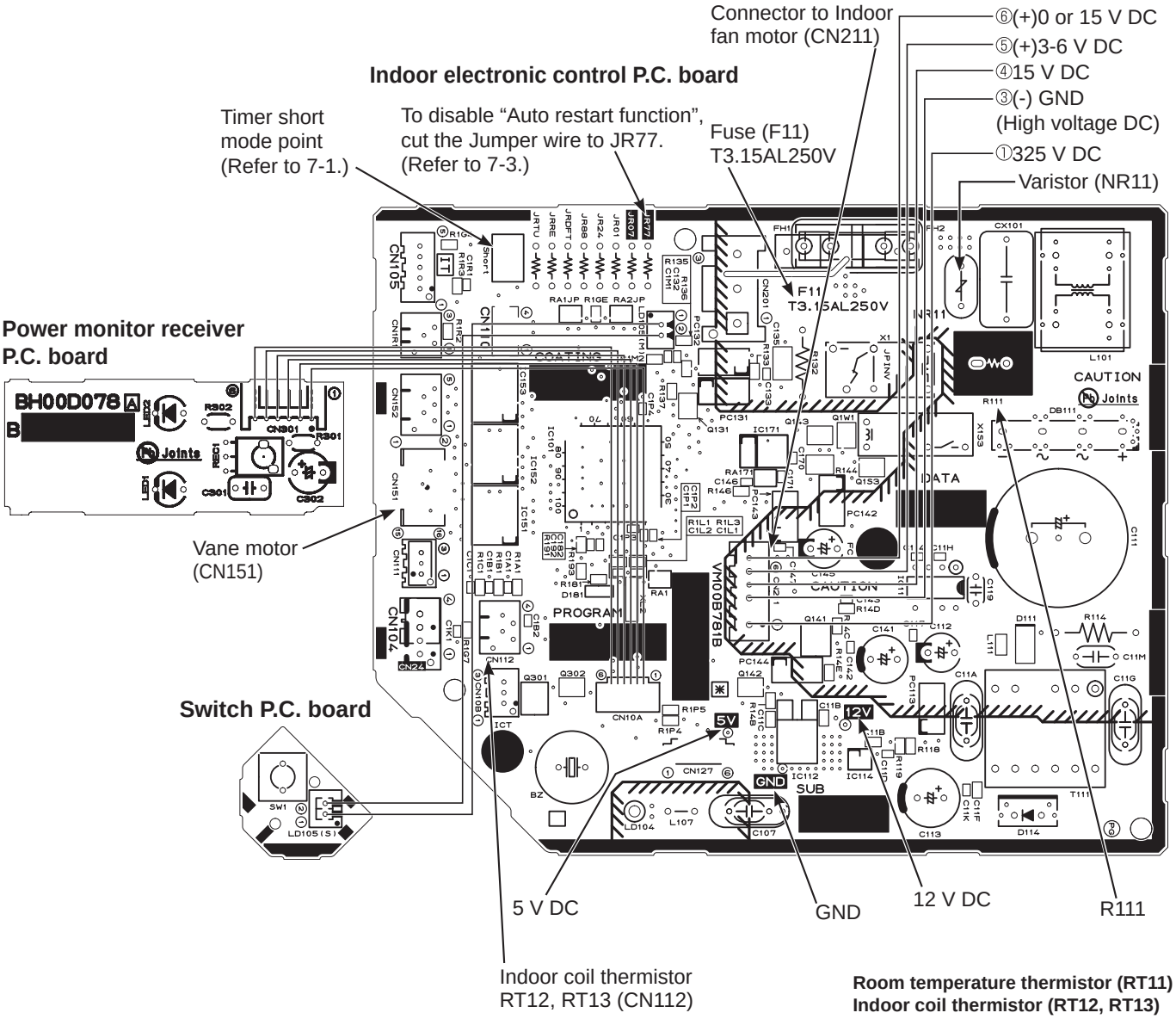

Room temperature thermistor (RT11)
Indoor coil thermistor (RT12, RT13)

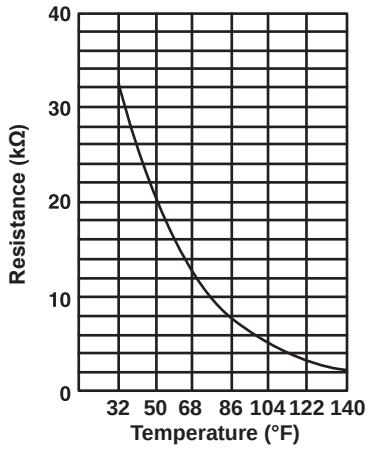

10 DISASSEMBLY INSTRUCTIONS

<Detaching method of the terminal with locking mechanism>

The terminal which has the locking mechanism can be detached as shown below.
There are 2 types of the terminal with locking mechanism.
The terminal without locking mechanism can be detached by pulling it out.
Check the shape of the terminal before detaching.

(1) Slide the sleeve and check if there is a locking lever or not.

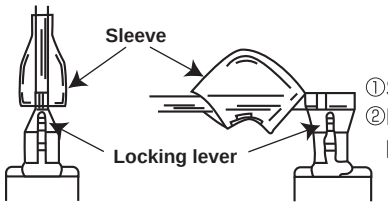

①Slide the sleeve.
②Pull the terminal while pushing the locking lever.

(2) The terminal with the connector shown below has the locking mechanism.

①Hold the sleeve, and pull out the terminal slowly.

10-1. NAXWST06B112AA NAXWST09B112AA NAXWST12B112AA NAXWST15B112AA NAYWST09B112AA NAYWST12B112AA NAYWST15B112AA

NOTE: Turn OFF the power supply before disassembly.

→: Indicates the visible parts in the photos/figures.
- - →: Indicates the invisible parts in the photos/figures.

OPERATING PROCEDURE	PHOTOS/FIGURES
1. Removing the panel (1) Remove the horizontal vanes. (2) Remove the screw caps of the panel. Remove the screws of the panel. (3) Unhook the lower part (Ⓐ) of the panel. (4) Hold the lower part of both ends of the panel and pull it slightly toward you, and then remove the panel by pushing it upward.	**Photo 1** 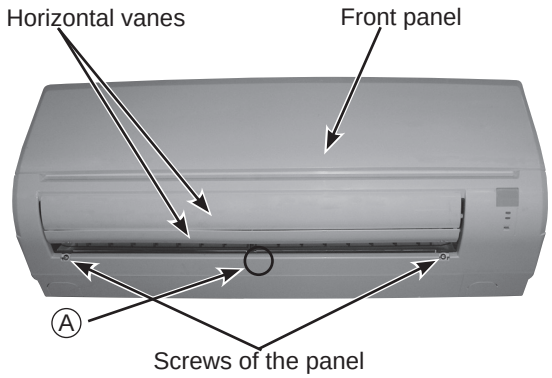

OPERATING PROCEDURE	PHOTOS/FIGURES

2. Removing the indoor electronic control P.C. board and the room temperature thermistor

(1) Remove the panel (Refer to section 1.) and the corner box.
(2) Remove the screw of the V.A. clamp and the V.A. clamp.
(3) Loosen the screw of the indoor/outdoor connecting wire and remove the indoor/outdoor connecting wire.
(4) Remove the screw of the electrical cover and the electrical cover.
(5) Open the indoor electronic control P.C. board holder (to right side)
(6) Disconnect the following connectors:
<Indoor electronic control P.C. board>
CN112 (Indoor coil thermistor)
CN151 (Vane motor)
CN10A (To the indoor power P.C. board)
(7) Unhook the catches of the indoor electronic control P.C. board holder from the nozzle and the electrical box (right side).
(8) Remove the indoor electronic control P.C. board holder from the conduit cover.
(9) Remove the room temperature thermistor from the hook of the indoor electronic control P.C. board holder.
(10) Open the back side of the indoor electronic control P.C. board holder, and remove the indoor electronic control P.C. board.
(11) Remove the room temperature thermistor from the indoor electronic control P.C. board.

3. Removing the indoor power P.C. board, the indoor terminal P.C. board, and the electrical box

(1) Remove the panel (Refer to section 1.) and the corner box.
(2) Remove the indoor/outdoor connecting wire and the indoor electric control P.C. board holder. (Refer to section 2 (2)-(8).).
(3) Remove the screw of the conduit cover and the conduit cover.
(4) Remove the screw of the conduit plate and the conduit plate.
(5) Remove the ground wire connected to the indoor heat exchanger from the electrical box.
(6) Remove the screw fixing the electrical box.
(7) Unhook first the lower, then the upper catches of the electrical box, and pull out the electrical box.
(8) Disconnect all the connectors on the indoor power P.C. board and unhook all lead wires.
(9) Remove the screw of terminal block on the indoor terminal P.C. board.
(10) Remove the indoor power P.C. board and the indoor terminal P.C. board.

Photo 2

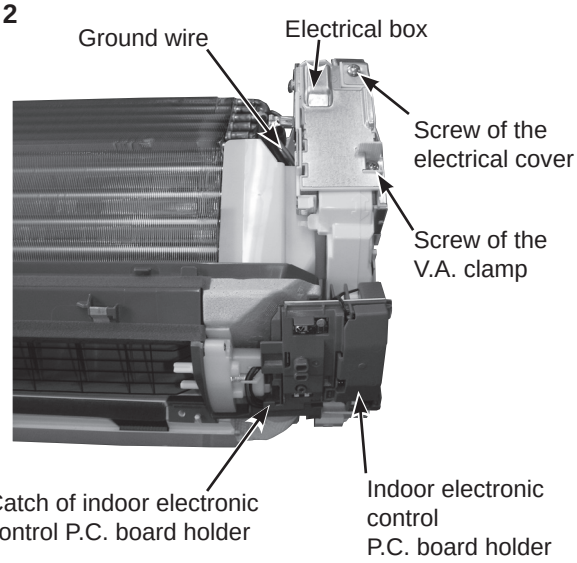

Photo 3

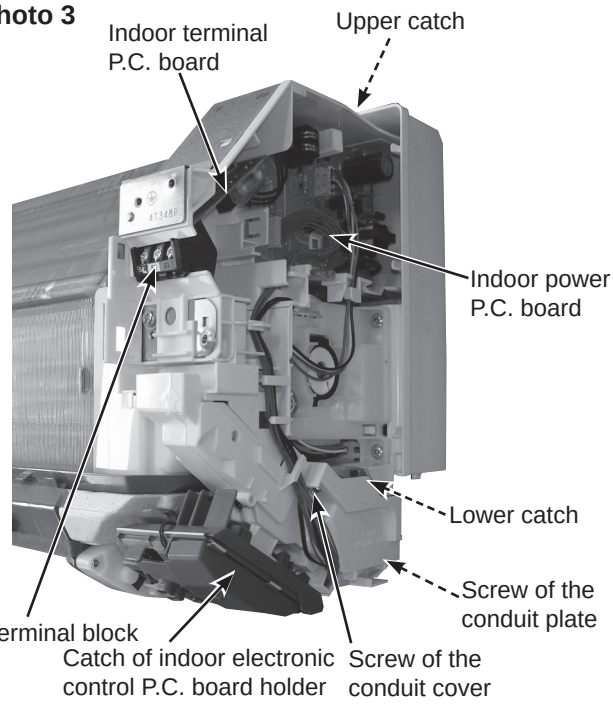

Photo 4

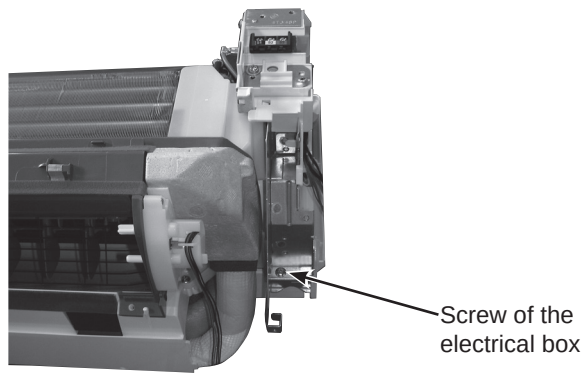

OPERATING PROCEDURE	PHOTOS/FIGURES
4. Removing the nozzle assembly (1) Remove the panel (Refer to section 1.) and the corner box. (2) Remove the indoor/outdoor connecting wire (Refer to section 2 (2)-(7).). (3) Remove the indoor electronic control P.C. board holder. (4) Pull out the drain hose from the nozzle assembly and remove the nozzle assembly.	**Photo 5** 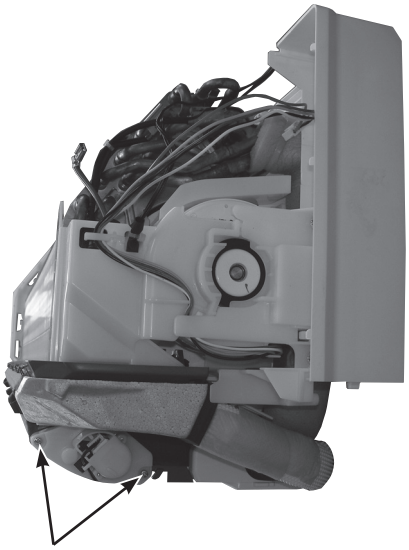 Screws of horizontal vane motor unit
5. Removing the horizontal vane motor (1) Remove the nozzle assembly. (Refer to section 5.) (2) Remove the screws of the horizontal vane motor unit. (3) Disconnect the connector from the horizontal vane motor. (4) Remove the screws of the horizontal vane motor. (5) Remove the horizontal vane motor from the horizontal vane motor unit.	

OPERATING PROCEDURE	PHOTOS/FIGURES

6. Removing the indoor fan motor, the indoor coil thermistor, and the line flow fan

(1) Remove the panel (Refer to section 1.) and the corner box.
(2) Remove the indoor electronic control P.C. board holder, the electrical box and the nozzle assembly.
(3) Remove the screws fixing the motor bed.
(4) Loosen the screw fixing the line flow fan.
(5) Remove the motor bed together with fan motor and motor band.
(6) Release the hooks of the motor band. Remove the motor band. Pull out the indoor fan motor.
(8) Remove the indoor coil thermistor from the heat exchanger.
*Install the indoor coil thermistor in its former position when assembling it. (Refer to Photo 9)
(9) Remove the screws fixing the left side of the heat exchanger.
(10) Lift the heat exchanger, and pull out the line flow fan to the lower-left.
* When attaching the line flow fan, screw the line flow fan so 5/32 inch (4 mm) gap is provided between the right end of the line flow fan and the right wall of the air passage of the box (Figure 1).

Figure 1

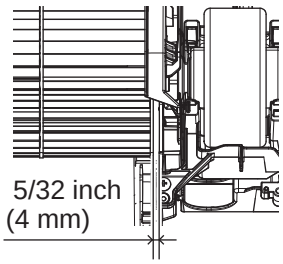

Photo 9

Photo 6

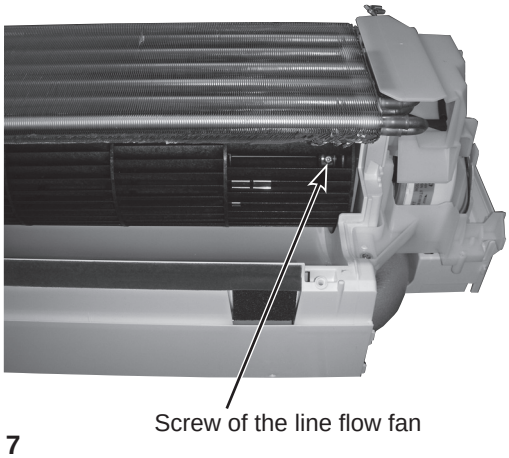

Photo 7

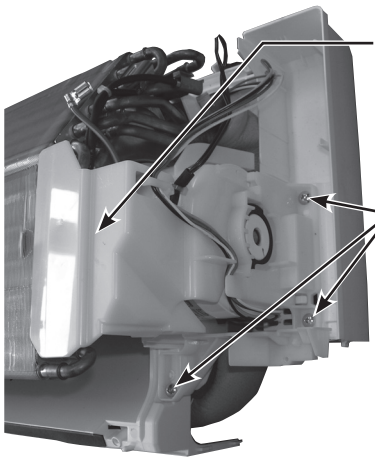

Photo 8

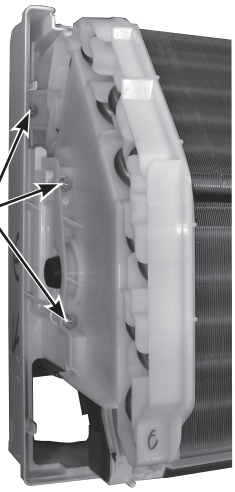

10-2. NAXWST18B112AA NAYWST18B112AA

NOTE: Turn OFF the power supply before disassembly.

OPERATING PROCEDURE	PHOTOS/FIGURES
1. Removing the panel (1) Remove the screw caps on the panel and remove the screws of the panel. (2) Pull the panel slightly toward you, and then remove the panel by pushing it upward.	**Photo 1** 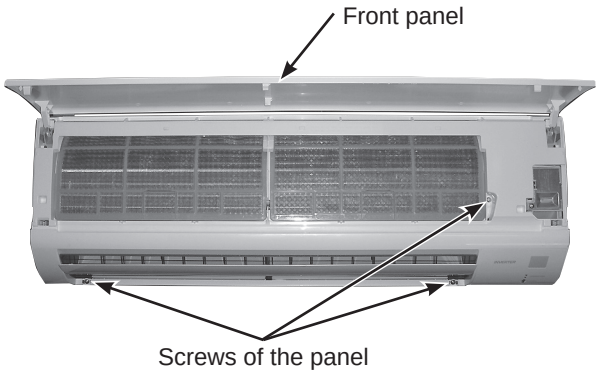

OPERATING PROCEDURE

2. Removing the indoor power P.C. board and the electrical box

(1) Remove the panel. (Refer to section 1.) Remove the right corner box.
(2) Disconnect the following connectors:
<Indoor electronic control P.C. board>
CN151 and CN152 (Vane motor)
CN112 (Indoor coil thermistor)
CN10A (To the indoor power P.C. board)
(3) Unhook the catch on the left side of the control P.C. board holder. Pull the control P.C. board holder as if opening the door at 90 degrees. Remove the control P.C. board holder from the axial rod on the electrical box.
(4) Remove the screw of the V.A. clamp.
(5) Remove the V.A. clamp and the indoor/outdoor connecting wire.
(6) Remove the screw of the conduit cover and the conduit cover.
(7) Remove the screw of the conduit plate and the conduit plate.
(8) Remove the screw fixing the electrical box.
(9) Remove the screws of the ground plate. (Photo 2)
(10) Remove the indoor coil thermistor from the water cover.
(11) Disengage the hooks of the water cover and remove the water cover.
(12) Remove the screw of the electrical cover and remove the electrical cover.
(13) Disconnect the CN211 (Indoor fan motor) from the indoor power P.C. board.
(14) Remove the upper catch of the electrical box, and pull out the electrical box.
* To attach the electrical box, pass the wires connecting the indoor power P.C. board and the indoor electronic control P.C. board through A. Pass the lead wires of the fan motor through B as shown in the Photo 3.
(15) Disconnect the following connectors.
<Indoor power P.C. board>
CN201 (Terminal block)
CN20A (To the indoor electronic control P.C. board)

Photo 4

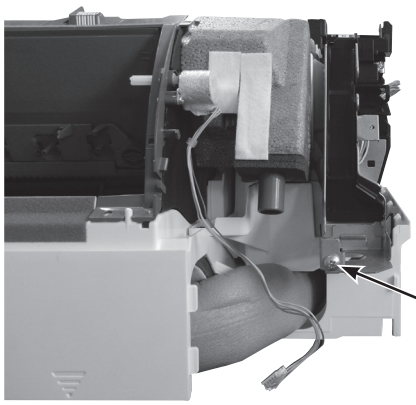

PHOTOS/FIGURES

Photo 2

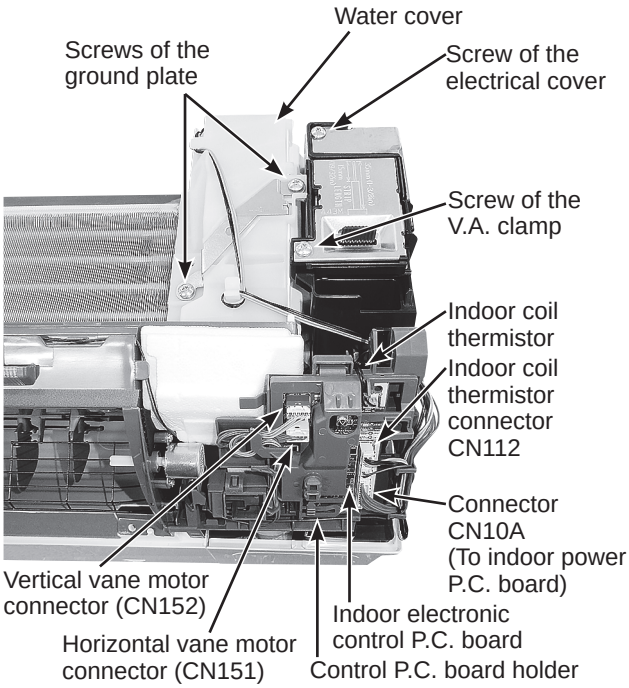

Photo 3

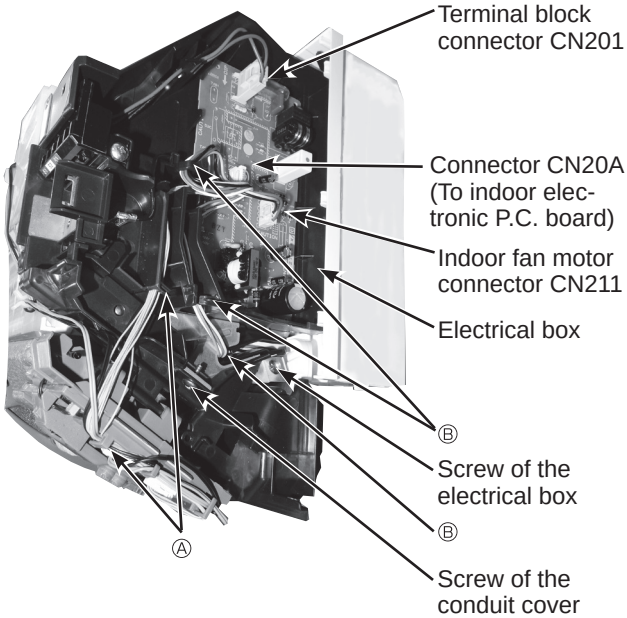

OPERATING PROCEDURE	PHOTOS/FIGURES
3. Removing the indoor electronic control P.C. board (1) Remove the panel. (Refer to section 1.) Remove the right corner box. (2) Disconnect the following connectors: <Indoor electronic control P.C. board> CN151 and CN152 (Vane motor) CN112 (Indoor coil thermistor) CN10A (To the indoor power P.C. board) (3) Unhook the catch on the left side of the control P.C. board holder. Pull the control P.C. board holder as if opening the door at 90 degrees. Remove the control P.C. board holder from the axial rod on the electrical box. (4) Remove the room temperature thermistor from the back side of the control P.C. board holder. (5) Unhook the catches of the control P.C. board holder, and open the control P.C. board holder. (6) Remove the indoor electronic control P.C. board from the control P.C. board holder.	**Photo 5** **Control P.C. board holder (Inside)** 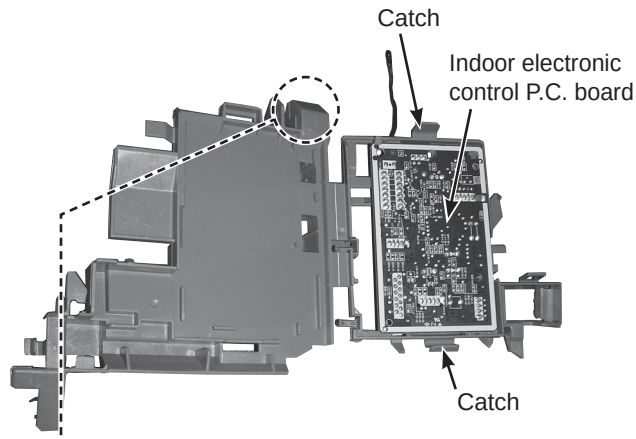 **Control P.C. board holder (Back side)** 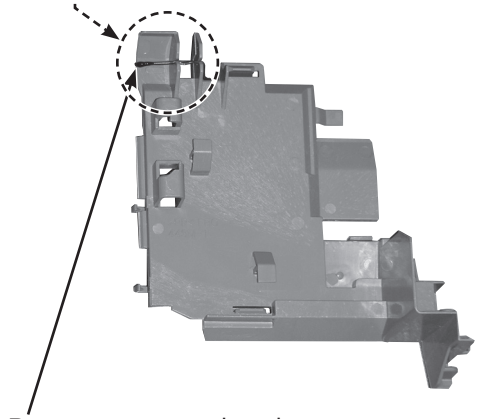
4. Removing the vane motor (1) Remove the panel. (Refer to section 1.) Remove the right corner box. (2) Remove the control P.C. board holder, water cover and the electrical box. (Refer to section 2.) (3) Pull out the drain hose from the nozzle assembly and remove the nozzle assembly. (4) Remove the screws of the vane motor and remove the vane motor. (5) Disconnect the connector from the vane motor.	**Photo 6** 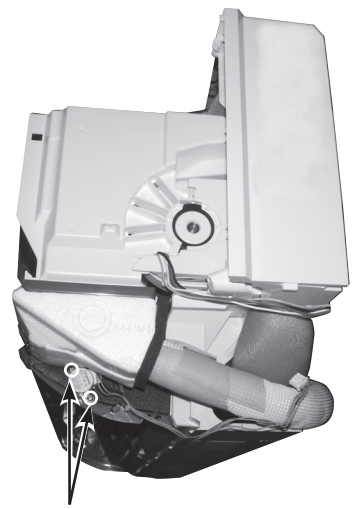

OPERATING PROCEDURE	PHOTOS/FIGURES

5. Removing the indoor fan motor, the indoor coil thermistor and the line flow fan

(1) Remove the panel. (Refer to section 1.) Remove the right corner box.
(2) Remove the control P.C. board holder, the water cover, the electrical box and the nozzle assembly. (Refer to section 2.)
(3) Remove the screws fixing the motor bed.
(4) Loosen the screw fixing the line flow fan.
(5) Remove the motor bed together with the indoor fan motor and the motor band.
(6) Disconnect the lead wire of the fan motor from the motor band.
(7) Disengage the hooks of the motor band and remove the motor band. Pull out the indoor fan motor.
(8) Remove the indoor coil thermistor from the heat exchanger.
* Install the indoor coil thermistor in its former position when assembling it.
(9) Remove the screws fixing the left side and upper right side of the heat exchanger.
(10) Lift the heat exchanger, and pull out the line flow fan to the lower-left.
* When attaching the line flow fan, screw the line flow fan so 5/32 inch (4 mm) gap is provided between the right end of the line flow fan and the right wall of the air passage of the box (Figure 1).

Figure 1

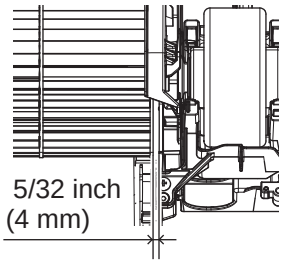

Photo 7

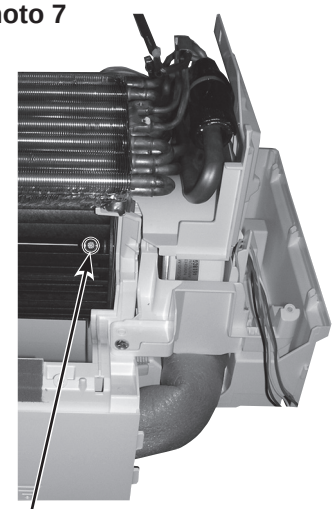

Photo 8

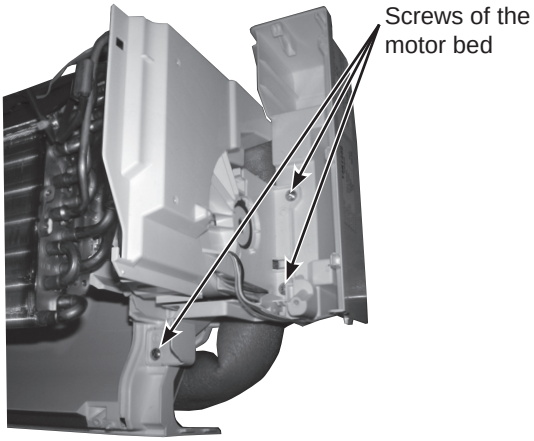

Photo 9

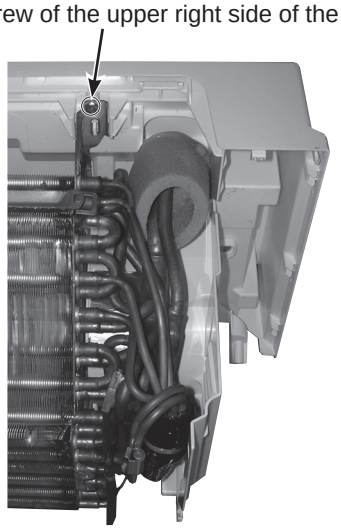

Photo 10

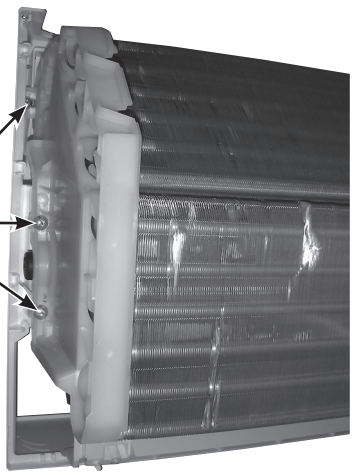

10-3. NAXWST24B112AA NAYWST24B112AA

NOTE: Turn OFF the power supply before disassembly.

OPERATING PROCEDURE	PHOTOS/FIGURES
1. Removing the panel (1) Remove the horizontal vanes. (2) Remove the screw caps of the panel. Remove the screws of the panel. (3) Hold the lower part of both ends of the panel and pull it slightly toward you, and then remove the panel by pushing it upward.	**Photo 1** 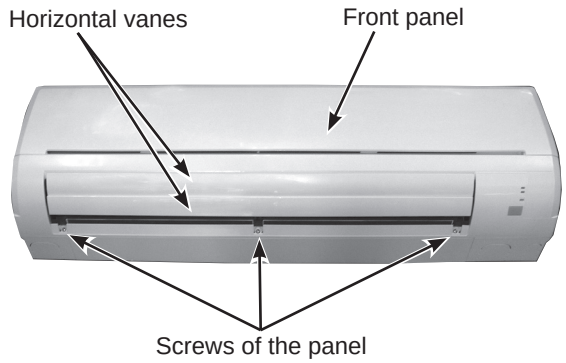
2. Removing the indoor electronic control P.C. board, the power monitor receiver SW P.C. board and the indoor terminal P.C. board (1) Remove the panel (Refer to section 1.) and the right corner box. (2) Remove the screw of the V.A. clamp and the V.A. clamp. (3) Remove the screw of the conduit cover and the conduit cover. (4) Remove the screw of the conduit plate, the conduit plate and the indoor/outdoor connecting wire. (5) Remove the screw of the electrical cover, and then the electrical cover. (6) Remove the ground wire connected to the indoor electronic control P.C. board from the electrical box. (Photo 3) (7) Remove the power monitor receiver holder. (8) Open the rear cover of the power monitor receiver holder and pull out the power monitor receiver SW P.C. board. (9) Disconnect all the connectors on the indoor electronic control P.C. board and unhook all lead wires. (10) Remove the screw of the terminal block on the indoor terminal P.C. board. (11) Remove the indoor terminal P.C. board and the indoor electronic control P.C. board.	**Photo 2** 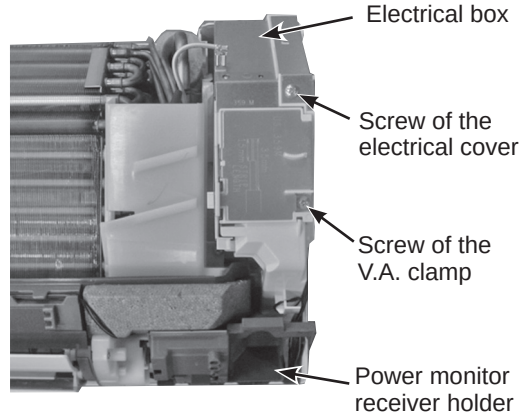
3. Removing the indoor electrical box (1) Remove the panel (Refer to section 1.) and the right corner box. (2) Remove the indoor/outdoor connecting wire. (Refer to section 2 (2)-(4).) (3) Remove the ground wire connected to the indoor heat exchanger from the electrical box. (4) Remove the screw of the electrical cover and remove the electrical cover. (5) Disconnect all the connectors on the indoor electronic control P.C. board and unhook all lead wires. (6) Remove the screw fixing the electrical box, then the upper catch of the electrical box, and pull out the electrical box.	**Photo 3** 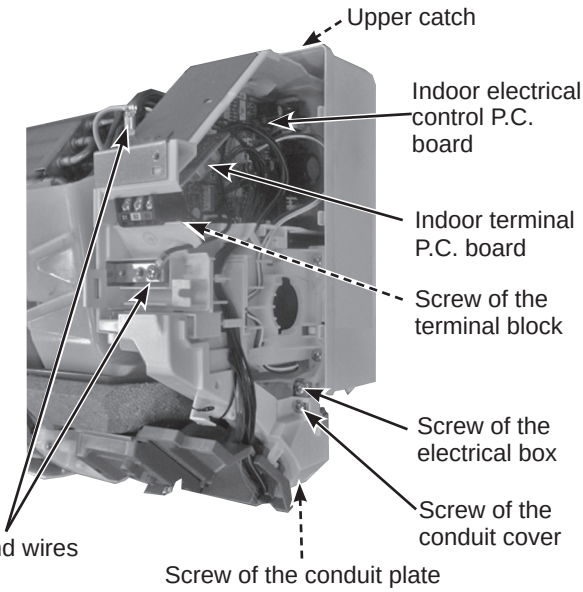

OPERATING PROCEDURE	PHOTOS/FIGURES
4. Removing the nozzle assembly (1) Remove the panel (Refer to section 1.) and the right corner box. (2) Remove the V.A. clamp, and then the indoor/outdoor connecting wire. (Refer to section 2 (2)-(4).) (3) Remove the electrical cover. (Photo 2) (4) Disconnect the following connector on the electronic control P.C. board: CN151 (Vane motor) (5) Remove the power monitor receiver holder. (Photo 2) (6) Pull out the drain hose from the nozzle assembly and remove the nozzle assembly. (7) Remove the vane motors. (Refer to section 5 and 6.)	**Photo 4** 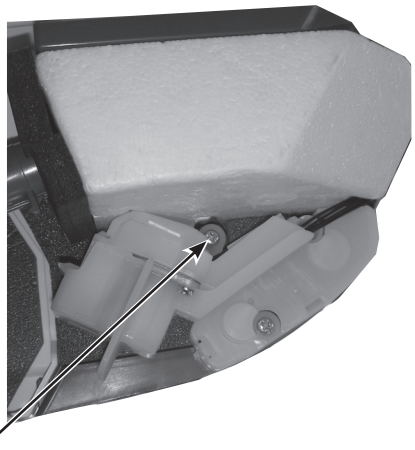 Screw of the vertical vane motor unit
5. Removing the vertical vane motor unit (1) Remove the nozzle assembly. (Refer to section 4.) (2) Remove the crank of the vertical vane motor unit from the arm of the vertical vane. (3) Remove the screw of the vertical vane motor unit, and pull the vertical vane motor unit. (4) Remove the screws of the vertical vane motor unit cover. (5) Remove the crank of the vertical vane motor unit from the shaft of the vane motor. (6) Remove the vertical vane motor from the vertical vane motor unit. (7) Disconnect the connector of vertical vane motor from the vertical vane motor.	**Photo 5** 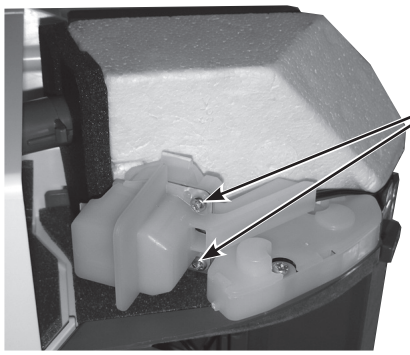 Screws of the vertical vane motor unit cover
6. Removing the horizontal vane motor (1) Remove the nozzle assembly. (Refer to section 4.) (2) Remove the screws of the horizontal vane motor unit, and pull out the horizontal vane motor unit. (3) Disconnect the connector from the horizontal vane motor. (4) Remove the screws of the horizontal vane motor unit cover. (5) Remove the horizontal vane motor from the horizontal vane motor unit.	**Photo 6** 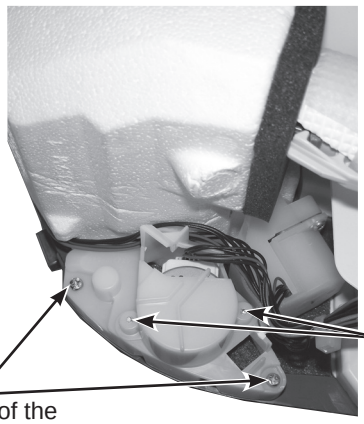 Screws of the horizontal vane motor unit cover Screws of the horizontal vane motor unit

OPERATING PROCEDURE	PHOTOS/FIGURES

7. Removing the water cut, the indoor fan motor, the indoor coil thermistor, and the line flow fan

(1) Remove the panel (Refer to section 1.) and the right corner box.
(2) Remove the power monitor receiver holder, the electrical box and the nozzle assembly. (Refer to section 2 - 4.)
(3) Remove the screw of the water cut and remove the water cut.
(4) Remove the screws fixing the motor bed.
(5) Loosen the screw fixing the line flow fan.
(6) Remove the motor bed together with fan motor and motor band.
(7) Remove the screw of the motor band.
(8) Release the hooks of the motor band. Remove the motor band. Pull out the indoor fan motor.
(9) Remove the indoor coil thermistor from the heat exchanger.
* Install the indoor coil thermistor in its former position when assembling it.
(10) Remove the screws fixing the left side of the heat exchanger.
(11) Lift the heat exchanger, and pull out the line flow fan to the lower-left.
* When attaching the line flow fan, screw the line flow fan so 13/64 inch (5 mm) gap is provided between the right end of the line flow fan and the right wall of the air passage of the box (Figure 1).

Figure 1

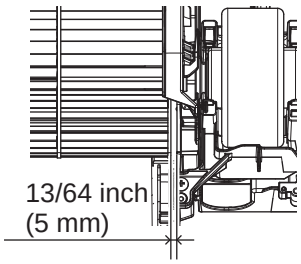

Photo 7

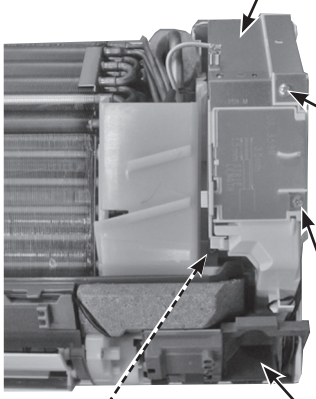

Photo 8

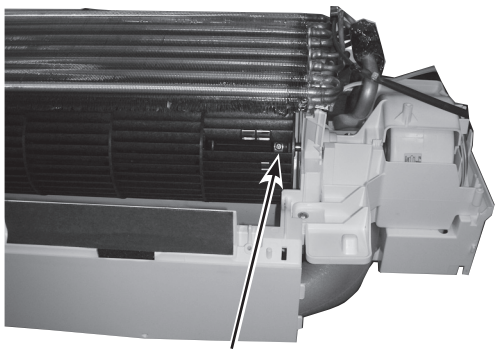

Photo 9

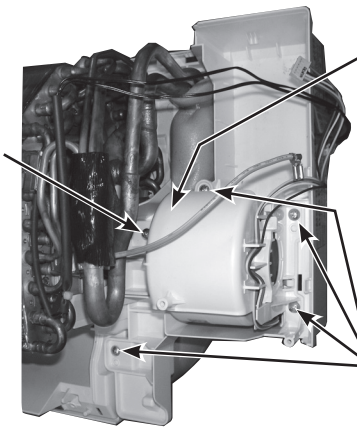

Photo 10

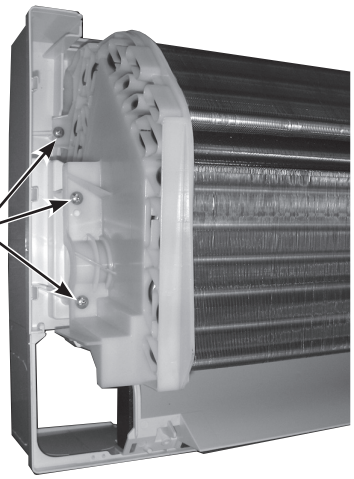

10-4. NAXWST30B112AA NAXWST36B112AA NAYWST30B112AA NAYWST36B112AA NAXWST30C112AA NAXWST36C112AA NAYWST30C112AA NAYWST36C112AA

NOTE : Turn OFF power supply before disassembly.

OPERATING PROCEDURE	PHOTOS/FIGURES
1. Removing the panel (1) Hold both sides of the front panel and lift the front panel until it is level, and then pull the hinges forward to remove the front panel. (2) Remove the screw caps of the panel. Remove the screws of the panel. (3) Hold the lower part of both ends on the panel and pull it slightly toward you, and then remove the panel by pushing it upward. (4) Remove the screw of the corner box. Remove the corner box.	**Photo 1** 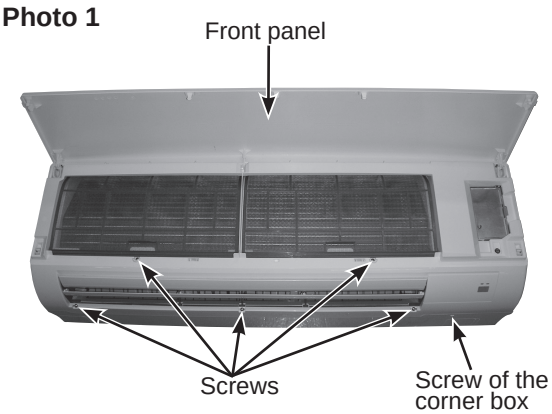
2. Removing the electrical box, the electronic control P.C. board, the power monitor receiver P.C. board and the SW P.C. board (1) Remove the panel and corner box. (Refer to section 1.) (2) Remove the screw of the electrical cover. Remove the electrical cover. (3) Remove the screw of the V.A. clamp. (4) Remove the V.A. clamp, then remove the indoor/outdoor connecting wire. (5) Disconnect TAB of the ground wire connected to the indoor heat exchanger. (6) Remove the screw of the electrical side cover. Remove the electrical side cover. (7) Disconnect all the connectors, TAB and TAB4 on the indoor electronic control P.C. board. (8) Remove the screw on lower side of the electrical box. (See photo 3) Remove the electrical box. (9) Remove the indoor electronic control P.C. board. (10) Remove the SW holder from the electrical box. (11) Open the SW holder and pull out the SW P.C. board. (12) Remove the power monitor receiver holder from the electrical box. (13) Open the power monitor receiver holder and pull out the power monitor receiver P.C. board.	**Photo 2** 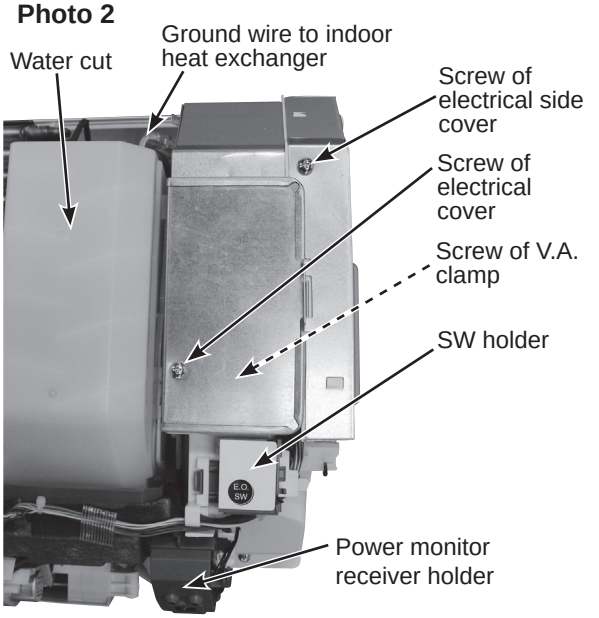

OPERATING PROCEDURE	PHOTOS/FIGURES
3. Removing the nozzle assembly (1) Remove the panel and the corner box. (Refer to section 1.) (2) Remove the electrical cover. (Refer to section 2.) (3) Remove the electrical side cover. (4) Disconnect the following connector on the electronic P.C. board. CN151 (Vane motor) (5) Pull out the drain hose from the nozzle assembly, and remove the nozzle assembly.	**Photo 3** 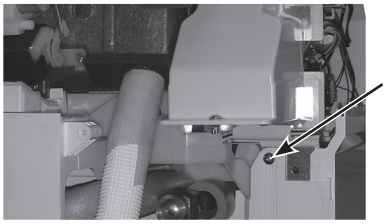 Screw of electrical box
4. Removing the vertical vane motor (1) Remove the nozzle assembly. (Refer to section 3.) (2) Remove the crank of the vertical vane motor unit from the vertical vane. (3) Remove the screw of the vertical vane motor unit, and pull the vertical vane motor unit. (4) Remove the screws of the vertical vane motor unit cover. (5) Remove the crank of the vertical vane motor unit from the shaft of the vertical vane motor. (6) Remove the vertical vane motor from the vertical vane motor unit. (7) Disconnect the connector of vertical vane motor from the vertical vane motor.	**Photo 4** 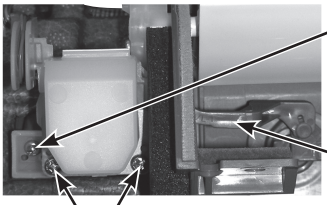 Screws of the vertical vane motor unit Crank of the vertical vane motor unit Screws of the vertical vane motor unit cover
5. Removing the horizontal vane motor (1) Remove the nozzle assembly. (Refer to section 3.) (2) Remove the screws of the horizontal vane motor unit, and pull out the horizontal vane motor unit. (3) Disconnect the connector from the horizontal vane motor. (4) Remove the screws of the horizontal vane motor. (5) Remove the horizontal vane motor.	**Photo 5** 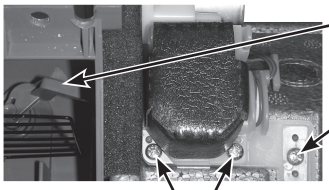 Crank of the vertical vane motor unit Screws of the vertical vane motor unit Screws of the vertical vane motor unit cover **Photo 6** 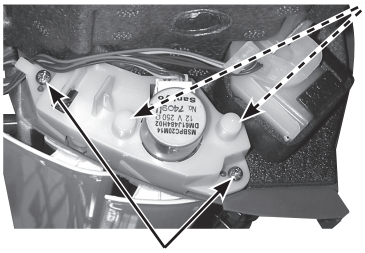 Screws of the horizontal vane motor Screws of the horizontal vane motor unit

OPERATING PROCEDURE	PHOTOS/FIGURES

6. Removing the line flow fan and the indoor fan motor

(1) Remove the panel and the corner box. (Refer to section 1.)
(2) Remove the electrical box. (Refer to section 2.)
(3) Remove the nozzle assembly. (Refer to section 3.)
(4) Remove the water cover.
(5) Loosen the screw of the line flow fan.
(6) Remove the screws of the motor bed.
(7) Remove the lead wire of the indoor coil thermistor from the hooks of the motor bed.
(8) Remove the motor band and the motor bed together with indoor fan motor. (Be careful not to drop the indoor fan motor because it is heavy.)
(9) Remove the screw of the motor band, and remove the motor band then pull out the indoor fan motor.
(10) Remove the screws of the left side of the heat exchanger.
(11) Lift the left side of the heat exchanger.
(12) Remove the line flow fan to the lower-left.

Photo 7

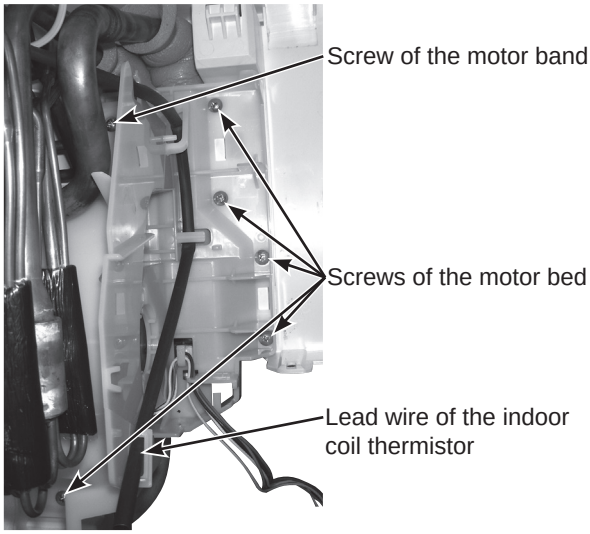

Photo 9

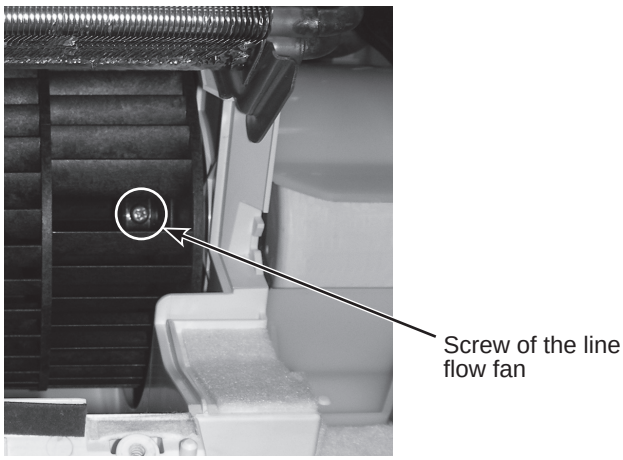

Photo 8

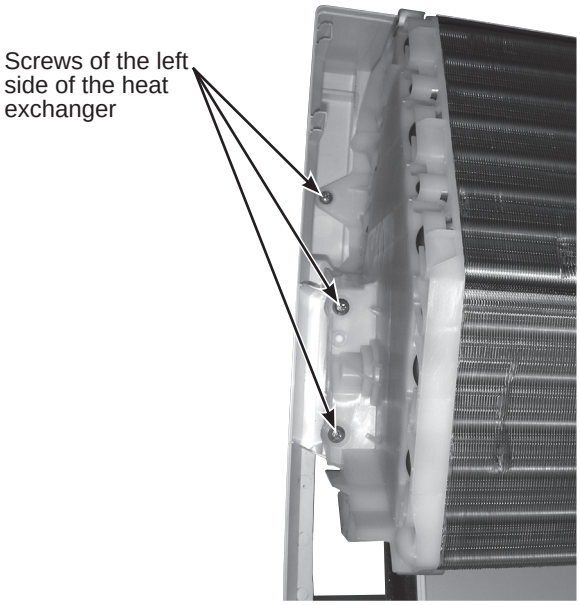

Fixing the indoor coil thermistor

*There are 2 forms of parts for fixing the indoor coil thermistor.

Clip shape

Holder shape

When fixing the indoor coil thermistor to the clip-shape/holder-shape part, the lead wire should point down.

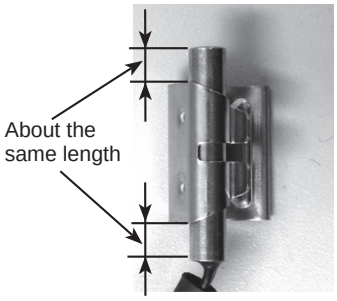

Position and procedure for mounting the clip-shape part

1. Set the indoor coil thermistor in the center of the clip-shape part.

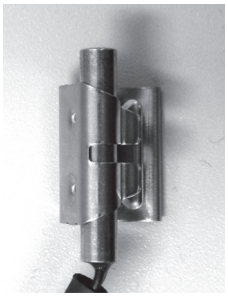

2. Check the (marked) mounting position.

3. Mount the clip-shape part.

NOTE:

- Take care to avoid loss and accidental falling of the clip-shape part inside the unit.
- Mount the clip-shape part on the marked position.
- Do not pull the lead wire when removing the indoor coil thermistor.

MITSUBISHI ELECTRIC TRANE HVAC US LLC

HEAD OFFICE: 1340 SATELLITE BOULEVARD, SUWANEE, GA 30024, USA

© Copyright 2021 MITSUBISHI ELECTRIC CORPORATION
Issued: Oct. 2022. No. OBHA874 REVISED EDITION-A
Published: Feb. 2021. No. OBHA874
Made in Japan

Specifications subject to change without notice.