PVA-A24AA7 & PUY-A24NHA7-BS
24,000 BTU/H MULTI-POSITION AIR HANDLER
24,000 BTU/H COOLING ONLY OUTDOOR

American Standard HEATING & AIR CONDITIONING

MITSUBISHI ELECTRIC

Job Name:

System Reference: Date:

Indoor Unit PVA-A24AA7

Outdoor Unit PUY-A24NHA7-BS

INDOOR UNIT FEATURES

- Ducted air handler provides a solution to cool and heat large zones
- Highly efficient totally enclosed ECM motor
- Selectable external static pressure: 0.30, 0.50 and 0.80 in.WG with 3 fan speeds at each static setting
- 1 inch R4.2 fiberglass free insulation reduces condensation and boosts efficiency
- Positive pressure cabinet with air leakage of less than 1.0% at 1.0 in.WG
- Unique blow through design allows simple coil cleaning when the blower is removed
- Multi-position installation: horizontal (left or right), vertical (up or down). For downflow configurations, the CMA-1 is recommended for proper management of condensate to prevent water blow-off in certain conditions
- Optional electric heat kit for additional heat capacity
- Optional humidifier control and ERV control
- Multiple control options available:
  - kumo cloud® smart device app for remote access
  - Third-party interface options
  - Wired or wireless controllers

OUTDOOR UNIT FEATURES

- Variable speed INVERTER-driven compressor
- Power receiver pre-charged with refrigerant volume for piping length up to 70 ft
- Low ambient cooling down to -40°F providing 100% capacity (with wind baffles)
- 24-hour continuous operation (cooling mode)
- High pressure protection
- Fast restart
- Superior energy and operational efficiency
- Seacoast protection on heat exchanger and base panel (rated for 2,000 hours in accordance with ASTM B117 testing)

Specifications are subject to change without notice.

© 2022 Mitsubishi Electric Trane HVAC US LLC. All rights reserved.

SPECIFICATIONS: PVA-A24AA7 & PUY-A24NHA7-BS

Cooling at 95°F[1]	Maximum Capacity	BTU/H	24,000
	Rated Capacity	BTU/H	24,000
	Minimum Capacity	BTU/H	10,000
	Maximum Power Input	W	1,960
	Rated Power Input	W	1,960
	Moisture Removal	Pints/h	3.0
	Sensible Heat Factor		0.83
	Power Factor [208V / 230V]	%	89.7 / 89.7
Efficiency	SEER		20.5
	EER[1]		12.2
	ENERGY STAR® Certified		No
Electrical	Voltage, Phase, Frequency		208/230, 1, 60
	Guaranteed Voltage Range	V AC	198 - 253
	Voltage: Indoor - Outdoor, S1-S2	V AC	208/230
	Voltage: Indoor - Outdoor, S2-S3	V DC	24
	Short-circuit Current Rating [SCCR]	kA	5
	Recommended Fuse/Breaker Size (Oudoor)	A	25
	Recommended Wire Size [Indoor - Outdoor]	AWG	14
	Power Supply		Indoor unit is powered by the outdoor unit
Indoor Unit	MCA	A	4.13
	Fan Motor Full Load Amperage	A	3.3
	Fan Motor Type		DC Motor
	Airflow Rate at Cooling, Dry	CFM	613–744–875
	Airflow Rate at Heating, Dry	CFM	613–744–875
	Sound Pressure Level [Cooling]	dB[A]	30–34–38
	Sound Pressure Level [Heating]	dB[A]	30–34–38
	External Static Pressure	in.WG	0.30–0.5–0.8
	Drain Pipe Size	In. [mm]	3/4 FPT [19.05]
	Coating on Heat Exchanger		—
	External Finish Color		Galvanized steel cabinet-Powder coated Slate Gray
	Unit Dimensions	W x D x H: In. [mm]	21 x 21-5/8 x 54-1/4 [534 x 548 x 1,378]
	Package Dimensions	W x D x H: In. [mm]	13-7/16 x 34-11/16 x 53-3/16 [340 x 880 x 1,350]
	Unit Weight	Lbs. [kg]	141 [64]
Indoor Unit Operating Temperature Range	Cooling Intake Air Temp [Maximum / Minimum]*	°F	90 DB, 72 WB / 66 DB, 61 WB
	Heating Intake Air Temp [Maximum / Minimum]	°F	77 DB / 59 DB
Outdoor Unit	MCA	A	19.0
	MOCP	A	26
	Fan Motor Full Load Amperage	A	0.4
	Fan Motor Output	W	86
	Airflow Rate [Cooling / Heating]	CFM	1940
	Refrigerant Control		LEV
	Defrost Method		Reverse Cycle
	Coating on Heat Exchanger		Blue Fin Coating (BS Model only)
	Sound Pressure Level, Cooling[1]	dB(A)	47
	Compressor Type		INVERTER-driven twin rotary
	Compressor Model		SNB172FWHM1
	Compressor Rated Load Amps	A	7
	Compressor Locked Rotor Amps	A	11.0
	Compressor Oil [Type // Charge]	oz.	FV50S // 23
	External Finish Color		Ivory Munsell 3Y 7.8/1.1
	Base Pan Heater		N/A
	Unit Dimensions	W x D x H: In. [mm]	37-13/32 x 13 (+1-3/16) x 37-1/8 [950 x 330 (+30) x 943]
	Package Dimensions	W x D x H: In. [mm]	40-15/16 x 17-11/16 x 40-11/16 [1040 x 450 x 1033]
	Unit Weight	Lbs. [kg]	151 [68]
	Package Weight	Lbs. [kg]	176 [80]
Outdoor Unit Operating Temperature Range	Cooling Air Temp [Maximum / Minimum]*	°F	115 DB / -40 DB
Refrigerant	Maximum Charge Quantity	Lbs, oz	7.0, 11.0
	Initial Charge Quantity	Ft. [m]	70.0 [20.0]
	Additional Refrigerant Charge Per Additional Piping Length	oz./Ft. [g/m]	0.3 [22.5]
Piping	Gas Pipe Size O.D. [Flared]	In.[mm]	5/8 [15.88]
	Liquid Pipe Size O.D. [Flared]	In.[mm]	3/8 [9.52]
	Maximum Piping Length	Ft. [m]	225 [68]
	Maximum Height Difference	Ft. [m]	100 [30]
	Maximum Number of Bends		10

NOTES:
AHRI Rated Conditions
(Rated data is determined at a fixed compressor speed) [1]Cooling (Indoor // Outdoor) °F 80 DB, 67 WB // 95 DB, 75 WB

*Indoor/Outdoor Unit Operating Temperature Range (Cooling Air Temp [Maximum / Minimum]):
- Wind baffles required to operate below 23°F DB in cooling mode.
- Cooling-only system with advanced wind baffle: -40°F - 115°F.
- Refer to wind baffle documentation for further information.

**Outdoor Unit Operating Temperature Range (Cooling Thermal Lock-out / Re-start Temperatures; Heating Thermal Lock-out / Re-start Temperatures):
- System cuts out in heating mode to avoid thermistor error and automatically restarts at these temperatures.

Specifications are subject to change without notice.

© 2022 Mitsubishi Electric Trane HVAC US LLC. All rights reserved.

INDOOR UNIT ACCESSORIES: PVA-A24AA7

Control Interface	3-Pin Connector	☐ PAC-715AD
	BACnet® and Modbus® Interface	☐ PAC-UKPRC001-CN-1
	CN24 Relay Kit	☐ CN24RELAY-KIT-CM3
	Connector cable for remote display	☐ PAC-SA88HA-EP
	kumo station® for kumo cloud®	☐ TAC-WHS01HC-E
	Lockdown bracket for remote controller	☐ RCMKP1CB
	Remote Operation Adapter‡	☐ PAC-SF40RM-E
	Thermostat Interface	☐ PAC-US444CN-1
	Thermostat Interface	☐ PAC-US445CN-1
	USNAP Adapter	☐ PAC-WHS01UP-E
Remote Sensor	Flush Mount Remote Temperature Sensor	☐ PAC-USSEN002-FM-1
	Flush Mount Temperature Sensor	☐ PAC-USSEN001-FM-1
	Remote Temperature Sensor	☐ PAC-SE41TS-E
	Wireless temperature and humitity sensor for kumo cloud®	☐ PAC-USWHS003-TH-1
Wired Remote Controller	Airzone ZBS Wired Blueface Principal Controller White	☐ AZZBSBLUEFACECB
	Airzone ZBS Wired Lite Controller White	☐ AZZBSLITECB
	Airzone ZBS Wireless Lite Controller White	☐ AZZBSLITERB
	Airzone ZBS Wireless Think Controller White	☐ AZZBSTHINKRB
	Deluxe Wired MA Remote Controller†	☐ AAR-40MAAU
	Simple MA Remote Controller†	☐ PAC-YT53CRAU-J
	Touch MA Controller†	☐ PAR-CT01MAU-SB
Wireless Remote Controller	kumo touch™ RedLINK™ Wireless Controller	☐ MHK2
	Wireless MA Receiver	☐ PAR-SR32MA-E
	Wireless MA Remote Controller	☐ PAR-FL32MA-E
Condensate	Blue Diamond (Advanced) Mini Condensate Pump w/ Reservoir & Sensor (208/230V) [recommended]	☐ X87-721
	Blue Diamond (MegaBlue Advanced) Condensate Pump w/ Reservoir & Sensor	☐ X87-835
	Blue Diamond Sensor Extension Cable — 15 Ft.	☐ C13-103
	Refco Condensate Pump (100-240 VAC) up to 120,000 BTU/H	☐ COMBI
Control Wire	20/2PR, 1PR shielded + 1PR plenum wire for Airzone, 100 ft reel	☐ CW2042S2-100
	20/2PR, shielded + 1PR plenum wire for Airzone, 500 ft reel	☐ CW2042S2-500
Disconnect Switch	(30A/600V/UL) [fits 2” X 4” utility box] - Black	☐ TAZ-MS303
	(30A/600V/UL) [fits 2” X 4” utility box] - White	☐ TAZ-MS303W
Downflow Kit	Condensate Management Kit for downflow installation	☐ CMA-1
Electric Heat Lockout	Electric Heat Lockout	☐ ETC-211020-MIT
Electric Kit Heats	10kW Electric Heater	☐ EH10-MPA-MB
	3kW Electric Heater	☐ EH03-MPA-MB
	5kW Electric Heater	☐ EH05-MPA-MB
	5kW Electric Heater Module-Medium Cabinet	☐ EH05-MPA-M
	8kW Electric Heater	☐ EH08-MPA-MB
Lineset	10’ x 3/8” x 10’ x 5/8” Lineset (Twin-Tube Insulation)††	☐ MPLS385812T-10
	100’ x 3/8” x 100’ x 5/8” Lineset (Twin-Tube Insulation)††	☐ MPLS385812T-100
	15’ x 3/8” x 15’ x 5/8” Lineset (Twin-Tube Insulation)††	☐ MPLS385812T-15
	30’ x 3/8” x 30’ x 5/8” Lineset (Twin-Tube Insulation)††	☐ MPLS385812T-30
	50’ x 3/8” x 50’ x 5/8” Lineset (Twin-Tube Insulation)††	☐ MPLS385812T-50
	65’ x 3/8” x 65’ x 5/8” Lineset (Twin-Tube Insulation)††	☐ MPLS385812T-65
Terminal Block	Separate Terminal Power Block	☐ SPTB1

NOTES:
‡PAC-SF40RM-E (Unable to use with wireless remote controller)

© 2022 Mitsubishi Electric Trane HVAC US LLC. All rights reserved.

OUTDOOR UNIT ACCESSORIES: PUY-A24NHA7-BS

Air Outlet Guide	Air Outlet Guide (1 Piece)	☐ PAC-SG59SG-E
Centralized Drain Pan	Centralized Drain Pan	☐ PAC-SG63DP-E
	Drain Pan	☐ PAC-SG64DP-E
Control/Service Tool	Control/Service Tool	☐ PAC-SK52ST
	M- & P-Series Maintenance Tool Cable Set	☐ M21EC0397
	USB/UART Conversion Cable (Required for all laptop connection)	☐ M21EC1397
Distribution pipe	Twinning Distribution Pipe (50:50)††	☐ MSDD-50TR-E
Hail Guards	Hail Guard	☐ HG-A6
Lineset	10’ x 3/8” x 10’ x 5/8” Lineset (Twin-Tube Insulation)††	☐ MPLS385812T-10
	100’ x 3/8” x 100’ x 5/8” Lineset (Twin-Tube Insulation)††	☐ MPLS385812T-100
	15’ x 3/8” x 15’ x 5/8” Lineset (Twin-Tube Insulation)††	☐ MPLS385812T-15
	30’ x 3/8” x 30’ x 5/8” Lineset (Twin-Tube Insulation)††	☐ MPLS385812T-30
	50’ x 3/8” x 50’ x 5/8” Lineset (Twin-Tube Insulation)††	☐ MPLS385812T-50
	65’ x 3/8” x 65’ x 5/8” Lineset (Twin-Tube Insulation)††	☐ MPLS385812T-65
M-NET Converter	M-NET Converter	☐ PAC-SJ85MA-E
	M-NET Converter	☐ PAC-SJ95MA-E
Mounting Pad	Condensing Unit Mounting Pad: 24” x 42” x 3”	☐ ULTRILITE2
Stand	18” Single Fan Stand	☐ QSMS1801M
	24” Single Fan Stand	☐ QSMS2401M
	Condenser Wall Bracket	☐ QSWB2000M-1
	Condenser Wall Bracket - Stainless Steel Finish	☐ QSWBSS
	Outdoor Unit Stand — 12” High	☐ QSMS1201M
Wind Baffle	Front Wind Baffle	☐ WB-PA5
	Rear Wind Baffle	☐ WB-RE5
	Side Advanced Wind Baffle	☐ WB-SD5

© 2022 Mitsubishi Electric Trane HVAC US LLC. All rights reserved.

INDOOR UNIT DIMENSIONS: PVA-A24AA7

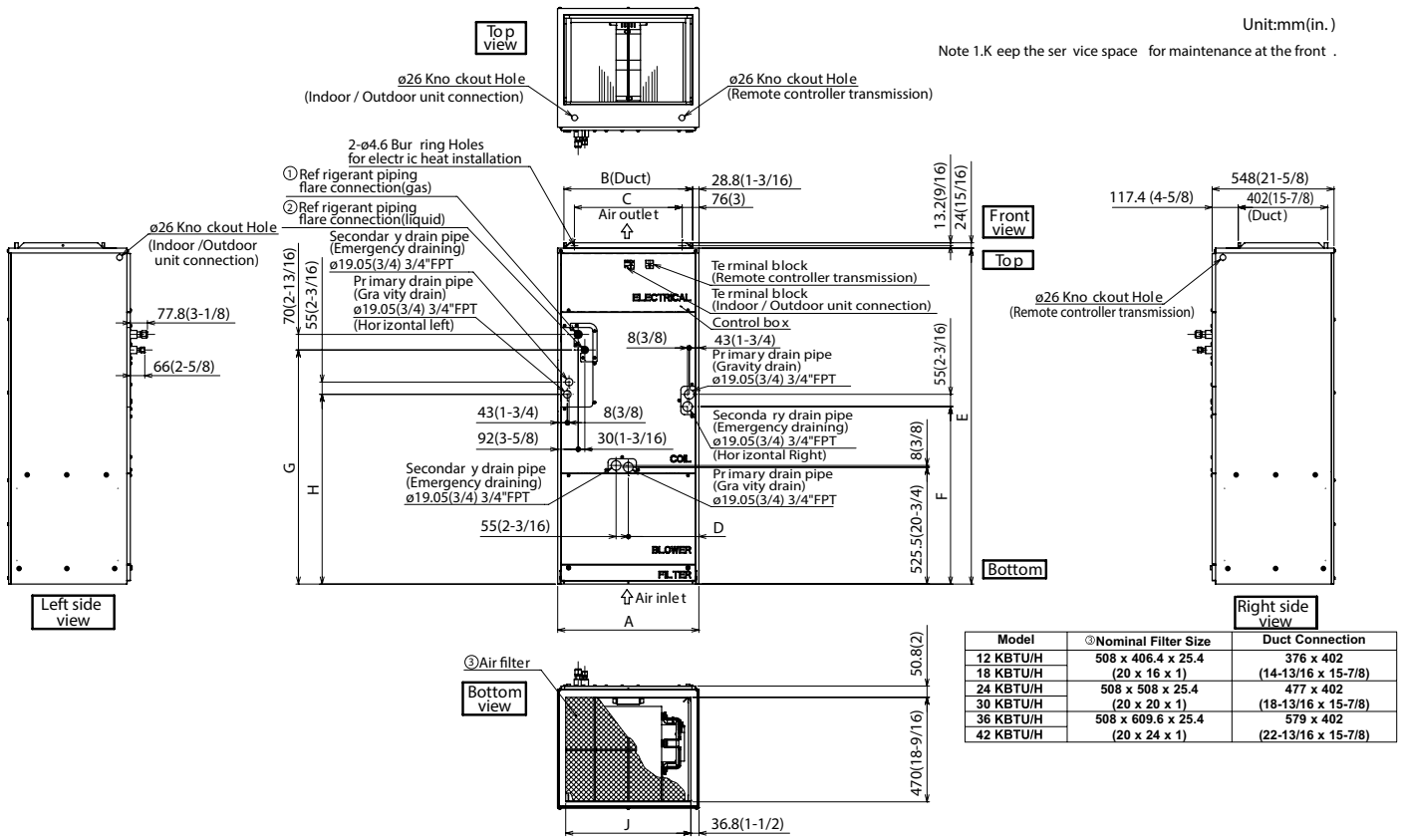

Model	③Nominal Filter Size	Duct Connection
12 KBTU/H	508 x 406.4 x 25.4	376 x 402
18 KBTU/H	(20 x 16 x 1)	(14-13/16 x 15-7/8)
24 KBTU/H	508 x 508 x 25.4	477 x 402
30 KBTU/H	(20 x 20 x 1)	(18-13/16 x 15-7/8)
36 KBTU/H	508 x 609.6 x 25.4	579 x 402
42 KBTU/H	(20 x 24 x 1)	(22-13/16 x 15-7/8)

Unit: mm (in.)

Model	A	B	C	D	E	F	G	H	J	①Gas Pipe	②Liquid Pipe
12 KBTU/H	432 (17)	376 (14-13/16)	281 (11-1/8)	224 (8-7/8)	1275 (50-1/4)	680 (26-13/16)	823 (32-7/16)	735.5 (29)	360 (14-3/16)	Φ 12.7 (1/2)	Φ 6.35 (1/4)
18 KBTU/H											
24 KBTU/H	534 (21)	477 (18-13/16)	382.6 (15-1/8)	266.5 (10-1/2)	1378 (54-1/4)	737 (29-1/16)	953.5 (37-9/16)	792 (31-3/16)	461 (18-3/16)	Φ 15.88 (5/8)	Φ 9.52 (3/8)
30 KBTU/H											
36 KBTU/H	635 (25)	579 (22-13/16)	484.6 (19-1/8)	317.5 (12-1/2)	1511 (59-1/2)	798.5 (31-7/16)	1053 (41-1/2)	853.5 (33-5/8)	563 (22-3/16)		
42 KBTU/H											

Specifications are subject to change without notice.

© 2022 Mitsubishi Electric Trane HVAC US LLC. All rights reserved.

OUTDOOR UNIT DIMENSIONS: PUY-A24NHA7-BS

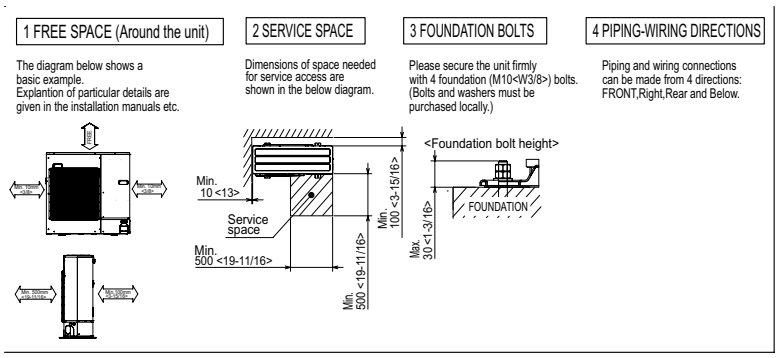

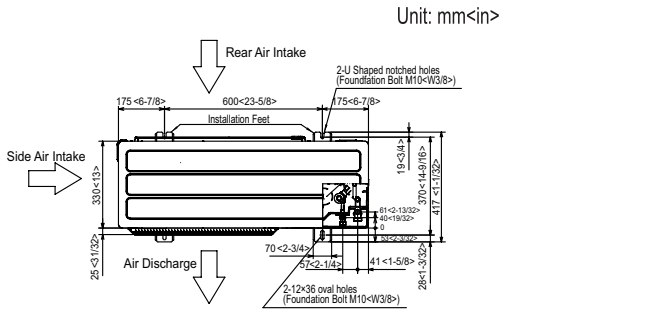

Example of Notes

① ··· Refrigerant GAS pipe connection (FLARE) ø15.88(5/8F)
② ··· Refrigerant LIQUID pipe connection (FLARE) ø 9.52(3/8F)
*1··· Indication of STOP VALVE connection location.

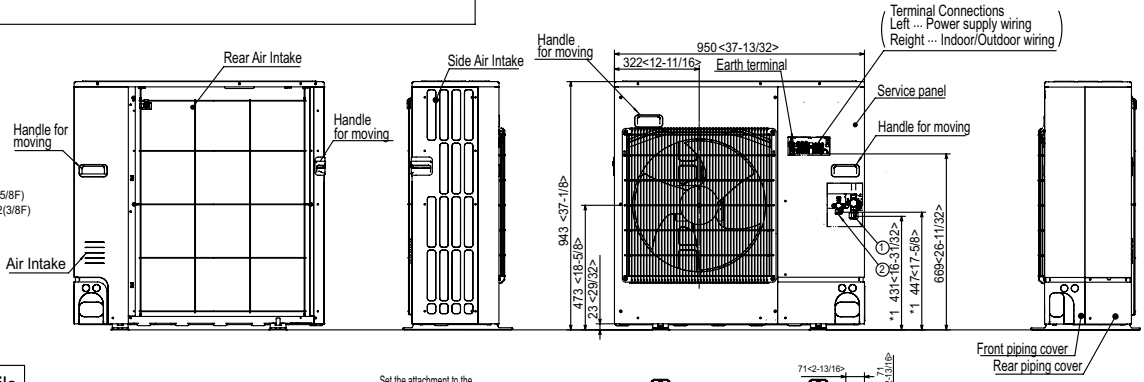

Piping knockout Hole Details

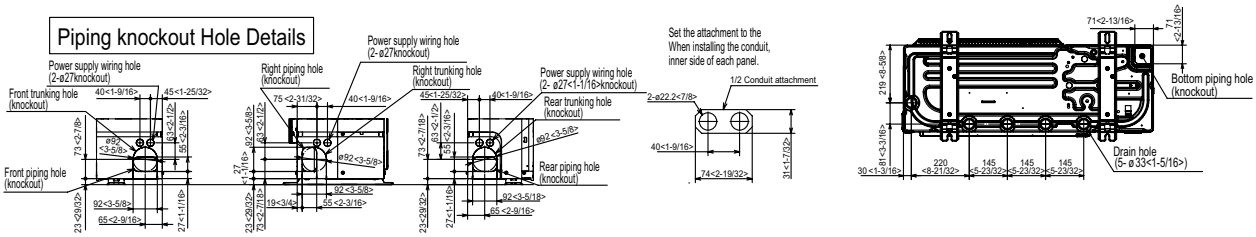

FORM# PVA-A24AA7 & PUY-A24NHA7-BS - 202211

Specifications are subject to change without notice.

© 2022 Mitsubishi Electric Trane HVAC US LLC. All rights reserved.