PVA-A12AA7 & PUY-A12NKA7-BS
12 ,000 BTU/H MULTI-POSITION AIR HANDLER
12,000 BTU/H COOLING ONLY OUTDOOR

American Standard HEATING & AIR CONDITIONING

MITSUBISHI ELECTRIC

Job Name:	
System Reference:	Date:

Indoor Unit.....PVA-A12AA7

Outdoor Unit.....PUY-A12NKA7-BS

INDOOR UNIT FEATURES

- Ducted air handler provides a solution to cool and heat large zones
- Highly efficient totally enclosed ECM motor
- Selectable external static pressure: 0.30, 0.50 and 0.80 in.WG with 3 fan speeds at each static setting
- 1 inch R4.2 fiberglass free insulation reduces condensation and boosts efficiency
- Positive pressure cabinet with air leakage of less than 1.0% at 1.0 in.WG
- Unique blow through design allows simple coil cleaning when the blower is removed
- Multi-position installation: horizontal (left or right), vertical (up or down). For downflow configurations, the CMA-1 is recommended for proper management of condensate to prevent water blow-off in certain conditions
- Optional electric heat kit for additional heat capacity
- Optional humidifier control and ERV control
- Multiple control options available:
  - kumo cloud® smart device app for remote access
  - Third-party interface options
  - Wired or wireless controllers

OUTDOOR UNIT FEATURES

- Variable speed INVERTER-driven compressor
- Power receiver pre-charged with refrigerant volume for piping length up to 70 ft
- Low ambient cooling down to -40°F providing 100% capacity (with wind baffles)
- 24-hour continuous operation (cooling mode)
- High pressure protection
- Fast restart
- Superior energy and operational efficiency
- Seacoast protection on heat exchanger and base panel (rated for 2,000 hours in accordance with ASTM B117 testing)

Specifications are subject to change without notice.

© 2022 Mitsubishi Electric Trane HVAC US LLC. All rights reserved.

SPECIFICATIONS: PVA-A12AA7 & PUY-A12NKA7-BS

Cooling at 95°F[1]	Maximum Capacity	BTU/H	12,000
	Rated Capacity	BTU/H	12,000
	Minimum Capacity	BTU/H	4,800
	Maximum Power Input	W	890
	Rated Power Input	W	890
	Moisture Removal	Pints/h	1.2
	Sensible Heat Factor		0.77
	Power Factor [208V / 230V]	%	87.9 / 87.9
Efficiency	SEER		21.4
	EER[1]		13.4
	ENERGY STAR® Certified		Yes
Electrical	Voltage, Phase, Frequency		208/230, 1, 60
	Guaranteed Voltage Range	V AC	198 - 253
	Voltage: Indoor - Outdoor, S1-S2	V AC	208/230
	Voltage: Indoor - Outdoor, S2-S3	V DC	24
	Short-circuit Current Rating [SCCR]	kA	5
	Recommended Fuse/Breaker Size (Oudoor)	A	15
	Recommended Wire Size [Indoor - Outdoor]	AWG	14
	Power Supply		Indoor unit is powered by the outdoor unit
Indoor Unit	MCA	A	3.0
	Fan Motor Full Load Amperage	A	2.4
	Fan Motor Type		DC Motor
	Airflow Rate at Cooling, Dry	CFM	280–340–400
	Airflow Rate at Heating, Dry	CFM	280–340–400
	Sound Pressure Level [Cooling]	dB[A]	27–31–35
	Sound Pressure Level [Heating]	dB[A]	27–31–35
	External Static Pressure	in.WG	0.30–0.5–0.8
	Drain Pipe Size	In. [mm]	3/4 FPT [19.05]
	Coating on Heat Exchanger		—
	External Finish Color		Galvanized steel cabinet-Powder coated Slate Gray
	Unit Dimensions	W x D x H: In. [mm]	17 x 21-5/8 x 50-1/4 [432 x 548 x 1,275]
	Package Dimensions	W x D x H: In. [mm]	13-7/16 x 34-11/16 x 45-5/16 [340 x 880 x 1,150]
	Unit Weight	Lbs. [kg]	113 [51]
Indoor Unit Operating Temperature Range	Cooling Intake Air Temp [Maximum / Minimum]*	°F	90 DB, 72 WB / 66 DB, 61 WB
	Heating Intake Air Temp [Maximum / Minimum]	°F	77 DB / 59 DB
Outdoor Unit	MCA	A	11.0
	MOCP	A	28
	Fan Motor Full Load Amperage	A	0.5
	Fan Motor Output	W	46
	Airflow Rate [Cooling / Heating]	CFM	1590
	Refrigerant Control		LEV
	Defrost Method		Reverse Cycle
	Coating on Heat Exchanger		Blue Fin Coating (BS Model only)
	Sound Pressure Level, Cooling[1]	dB(A)	44
	Compressor Type		INVERTER-driven twin rotary
	Compressor Model		SNB092FQCMC
	Compressor Rated Load Amps	A	7
	Compressor Locked Rotor Amps	A	12.0
	Compressor Oil [Type // Charge]	oz.	FV50S // 12
	External Finish Color		Ivory Munsell 3Y 7.8/1.1
	Base Pan Heater		N/A
	Unit Dimensions	W x D x H: In. [mm]	31-13/16 (+2-7/16) x 11-13/16 x 24-13/16 [809 (+62) x 300 x 630]
	Package Dimensions	W x D x H: In. [mm]	37-1/16 x 16-3/16 x 27-7/16 [941 x 411 x 697]
	Unit Weight	Lbs. [kg]	92 [41]
	Package Weight	Lbs. [kg]	103 [46]
Outdoor Unit Operating Temperature Range	Cooling Air Temp [Maximum / Minimum]*	°F	115 DB / -40 DB
Refrigerant	Maximum Charge Quantity	Lbs, oz	4.0, 7.0
	Initial Charge Quantity	Ft. [m]	70.0 [21.0]
	Additional Refrigerant Charge Per Additional Piping Length	oz./Ft. [g/m]	.1 [1]
Piping	Gas Pipe Size O.D. [Flared]	In.[mm]	1/2 [12.7]
	Liquid Pipe Size O.D. [Flared]	In.[mm]	1/4 [6.35]
	Maximum Piping Length	Ft. [m]	165 [50]
	Maximum Height Difference	Ft. [m]	100 [30]
	Maximum Number of Bends		15

NOTES:
AHRI Rated Conditions
(Rated data is determined at a fixed compressor speed) [1]Cooling (Indoor // Outdoor) °F 80 DB, 67 WB // 95 DB, 75 WB

*Indoor/Outdoor Unit Operating Temperature Range (Cooling Air Temp [Maximum / Minimum]):
- Wind baffles required to operate below 23°F DB in cooling mode.
- Cooling-only system with advanced wind baffle: -40°F - 115°F.
- Refer to wind baffle documentation for further information.

**Outdoor Unit Operating Temperature Range (Cooling Thermal Lock-out / Re-start Temperatures; Heating Thermal Lock-out / Re-start Temperatures):
- System cuts out in heating mode to avoid thermistor error and automatically restarts at these temperatures.

Specifications are subject to change without notice.

© 2022 Mitsubishi Electric Trane HVAC US LLC. All rights reserved.

INDOOR UNIT ACCESSORIES: PVA-A12AA7

Control Interface	3-Pin Connector	☐ PAC-715AD
	BACnet® and Modbus® Interface	☐ PAC-UKPRC001-CN-1
	CN24 Relay Kit	☐ CN24RELAY-KIT-CM3
	Connector cable for remote display	☐ PAC-SA88HA-EP
	IT Extender	☐ PAC-WHS01IE-E
	kumo station® for kumo cloud®	☐ TAC-WHS01HC-E
	Lockdown bracket for remote controller	☐ RCMKP1CB
	Remote Operation Adapter‡	☐ PAC-SF40RM-E
	Thermostat Interface	☐ PAC-US444CN-1
	Thermostat Interface	☐ PAC-US445CN-1
	USNAP Adapter	☐ PAC-WHS01UP-E
Remote Sensor	Flush Mount Remote Temperature Sensor	☐ PAC-USSEN002-FM-1
	Flush Mount Temperature Sensor	☐ PAC-USSEN001-FM-1
	Remote Temperature Sensor	☐ PAC-SE41TS-E
	Wireless temperature and humitity sensor for kumo cloud®	☐ PAC-USWHS003-TH-1
Wired Remote Controller	Airzone ZBS Wired Blueface Principal Controller White	☐ AZZBSBLUEFACECB
	Airzone ZBS Wired Lite Controller White	☐ AZZBSLITECB
	Airzone ZBS Wired Think Controller White	☐ AZZBSTHINKCB
	Airzone ZBS Wireless Lite Controller White	☐ AZZBSLITERB
	Airzone ZBS Wireless Think Controller White	☐ AZZBSTHINKRB
	Deluxe Wired MA Remote Controller†	☐ AAR-40MAAU
	Simple MA Remote Controller†	☐ PAC-YT53CRAU-J
	Touch MA Controller†	☐ PAR-CT01MAU-SB
Wireless Remote Controller	kumo touch™ RedLINK™ Wireless Controller	☐ MHK2
	Wireless MA Receiver	☐ PAR-SR32MA-E
	Wireless MA Remote Controller	☐ PAR-FL32MA-E
Condensate	Blue Diamond (Advanced) Mini Condensate Pump w/ Reservoir & Sensor (208/230V) [recommended]	☐ X87-721
	Blue Diamond (MicroBlue) Mini Condensate Pump (110/208/230V) up to 18,000 BTU/H	☐ X86-003
	Blue Diamond Sensor Extension Cable — 15 Ft.	☐ C13-103
	Refco Condensate Pump (100-240 VAC) up to 120,000 BTU/H	☐ COMBI
Control Wire	20/2PR, 1PR shielded + 1PR plenum wire for Airzone, 100 ft reel	☐ CW2042S2-100
	20/2PR, shielded + 1PR plenum wire for Airzone, 500 ft reel	☐ CW2042S2-500
Disconnect Switch	(30A/600V/UL) [fits 2” X 4” utility box] - Black	☐ TAZ-MS303
	(30A/600V/UL) [fits 2” X 4” utility box] - White	☐ TAZ-MS303W
Downflow Kit	Condensate Management Kit for downflow installation	☐ CMA-1
Electric Heat Lockout	Electric Heat Lockout	☐ ETC-211020-MIT
Electric Kit Heats	3kW Electric Heater	☐ EH03-MPA-SB
	5kW Electric Heater	☐ EH05-MPA-SB
Lineset	100’ x 1/4” x 100’ / 1/2” Lineset (Twin-Tube Insulation)	☐ MLS141212T-100
	15’ x 1/4” x 15’ / 1/2” Lineset (Twin-Tube Insulation)	☐ MLS141212T-15
	30’ x 1/4” x 30’ / 1/2” Lineset (Twin-Tube Insulation)	☐ MLS141212T-30
	50’ x 1/4” x 50’ / 1/2” Lineset (Twin-Tube Insulation)	☐ MLS141212T-50
	65’ x 1/4” x 65’ / 1/2” Lineset (Twin-Tube Insulation)	☐ MLS141212T-65
Terminal Block	Separate Terminal Power Block	☐ SPTB1

NOTES:
‡PAC-SF40RM-E (Unable to use with wireless remote controller)

© 2022 Mitsubishi Electric Trane HVAC US LLC. All rights reserved.

OUTDOOR UNIT ACCESSORIES: PUY-A12NKA7-BS

Air Outlet Guide	Air Outlet Guide	☐ PAC-SJ07SG-E
Centralized Drain Pan	Centralized Drain Pan	☐ PAC-SG63DP-E
	Drain Pan	☐ PAC-SG64DP-E
Control/Service Tool	Control/Service Tool	☐ PAC-SK52ST
	M- & P-Series Maintenance Tool Cable Set	☐ M21EC0397
	USB/UART Conversion Cable (Required for all laptop connection)	☐ M21EC1397
Drain Socket	Drain Socket	☐ MAC-871DS
Hail Guards	Hail Guard	☐ HG-A5
M-NET Converter	M-NET Converter	☐ PAC-SJ96MA-E
Mounting Pad	Condensing Unit Mounting Pad: 16” x 36” x 3”	☐ ULTRILITE1
Stand	18” Single Fan Stand	☐ QSMS1801M
	24” Single Fan Stand	☐ QSMS2401M
	Condenser Wall Bracket	☐ QSWB2000M-1
	Condenser Wall Bracket - Stainless Steel Finish	☐ QSWBSS
	Outdoor Unit Stand — 12” High	☐ QSMS1201M
Wind Baffle	Front Wind Baffle	☐ WB-PA4
	Rear Wind Baffle	☐ WB-RE4
	Side Advanced Wind Baffle	☐ WB-SD4

© 2022 Mitsubishi Electric Trane HVAC US LLC. All rights reserved.

INDOOR UNIT DIMENSIONS: PVA-A12AA7

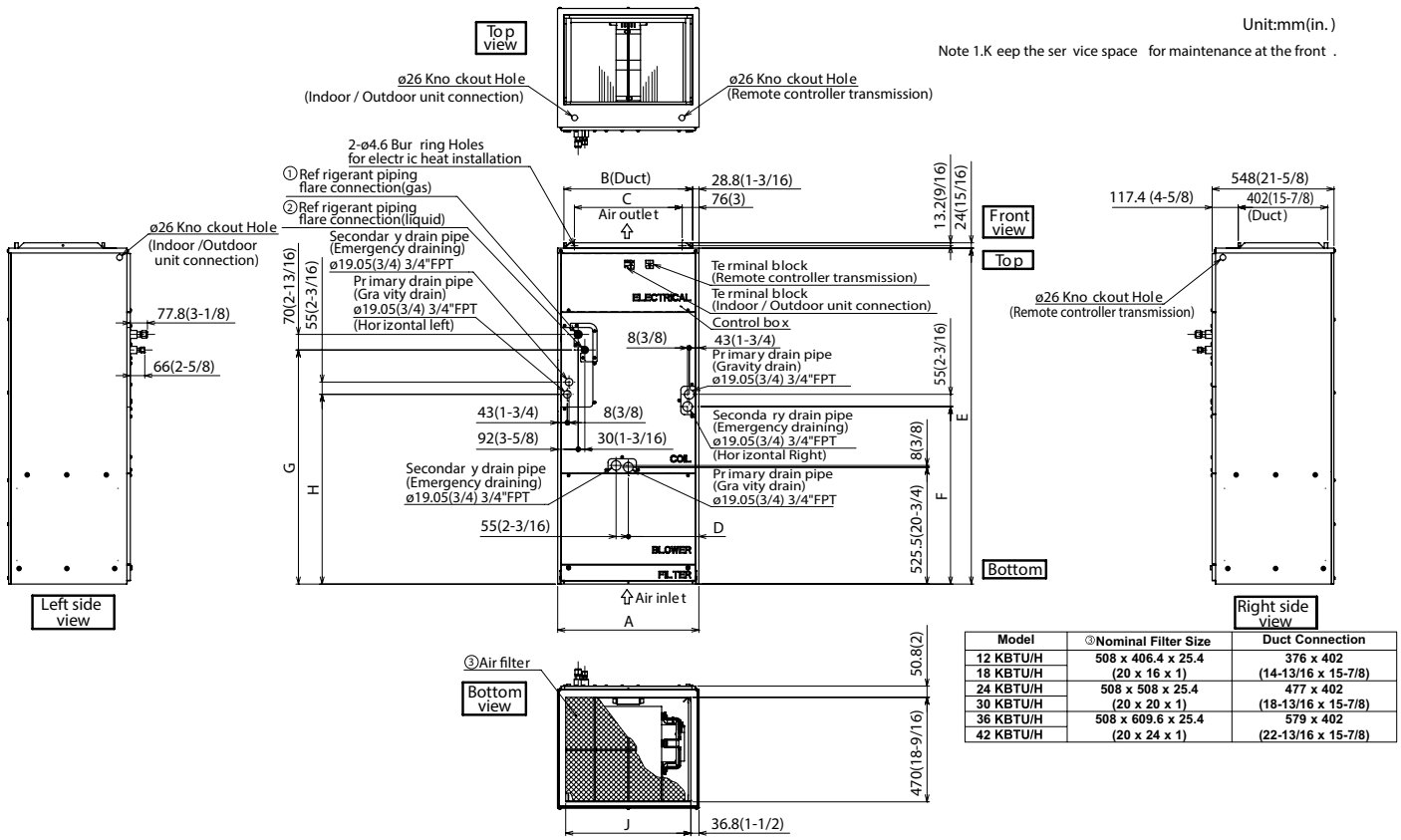

Model	③Nominal Filter Size	Duct Connection
12 KBTU/H 18 KBTU/H	508 x 406.4 x 25.4 (20 x 16 x 1)	376 x 402 (14-13/16 x 15-7/8)
24 KBTU/H 30 KBTU/H	508 x 508 x 25.4 (20 x 20 x 1)	477 x 402 (18-13/16 x 15-7/8)
36 KBTU/H 42 KBTU/H	508 x 609.6 x 25.4 (20 x 24 x 1)	579 x 402 (22-13/16 x 15-7/8)

Unit: mm (in.)

Model	A	B	C	D	E	F	G	H	J	①Gas Pipe	②Liquid Pipe
12 KBTU/H 18 KBTU/H	432 (17)	376 (14-13/16)	281 (11-1/8)	224 (8-7/8)	1275 (50-1/4)	680 (26-13/16)	823 (32-7/16)	735.5 (29)	360 (14-3/16)	Φ 12.7 (1/2)	Φ 6.35 (1/4)
24 KBTU/H 30 KBTU/H	534 (21)	477 (18-13/16)	382.6 (15-1/8)	266.5 (10-1/2)	1378 (54-1/4)	737 (29-1/16)	953.5 (37-9/16)	792 (31-3/16)	461 (18-3/16)	Φ 15.88 (5/8)	Φ 9.52 (3/8)
36 KBTU/H 42 KBTU/H	635 (25)	579 (22-13/16)	484.6 (19-1/8)	317.5 (12-1/2)	1511 (59-1/2)	798.5 (31-7/16)	1053 (41-1/2)	853.5 (33-5/8)	563 (22-3/16)		

Specifications are subject to change without notice.

© 2022 Mitsubishi Electric Trane HVAC US LLC. All rights reserved.

OUTDOOR UNIT DIMENSIONS: PUY-A12NKA7-BS

Unit: mm<in>

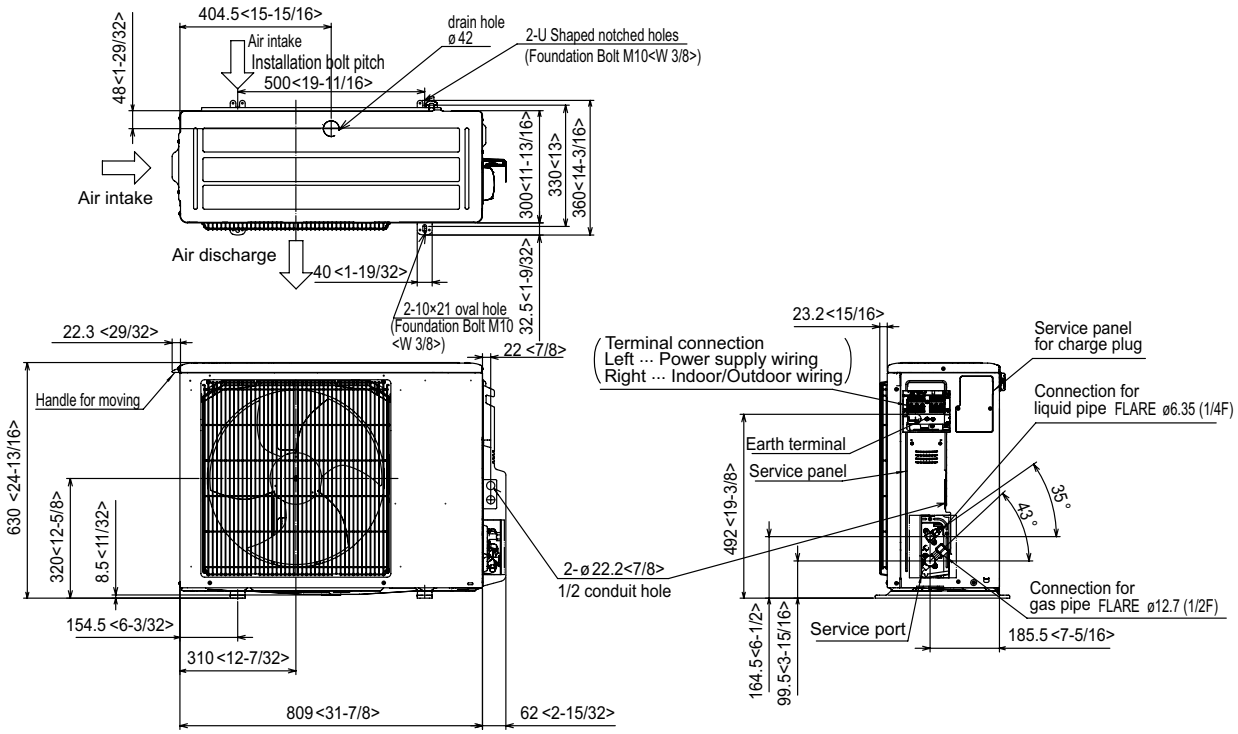

Free space around the outdoor unit (basic example)

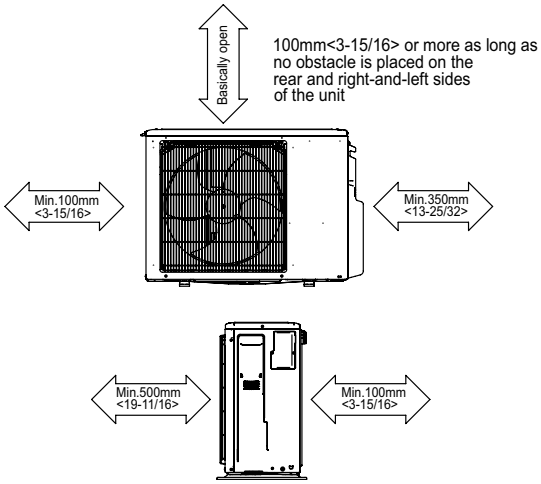

2 sides should be open in
the right, left and rear side.

FOUNDATION BOLTS

Please secure the unit firmly
with 4 foundation (M10<W3/8>) bolts.
(Bolts, washers and nut must
be purchased locally).

<Foundation bolt height>

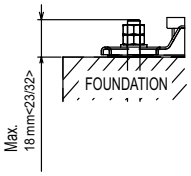

PIPING-WIRING DIRECTION

Piping and wiring connection can
be made from the rear direction only.

FORM# PVA-A12AA7 & PUY-A12NKA7-BS - 202211

Specifications are subject to change without notice.

© 2022 Mitsubishi Electric Trane HVAC US LLC. All rights reserved.