# PKA-A12LA & PUY-A12NKA7
## 12,000 BTU/H WALL MOUNT
## 12,000 BTU/H COOLING ONLY OUTDOOR

American Standard HEATING & AIR CONDITIONING

MITSUBISHI ELECTRIC

| | |
|---|---|
| Job Name: | |
| System Reference: | Date: |

Indoor Unit ..... PKA-A12LA

Outdoor Unit ..... PUY-A12NKA7

INDOOR UNIT FEATURES
- Selectable high sensible vs high latent capacity mode
- UL 60335-2-40 compliant
- Sleek, compact design
- Simple installation
- Airflow direction control
- Auto fan mode
- Suitable for: server rooms, daycare centers, classrooms, churches, small offices, and more
- Multiple control options available:
  - kumo cloud® smart device app for remote access
  - Third-party interface options
  - Wired or wireless controllers

OUTDOOR UNIT FEATURES
- Variable speed INVERTER-driven compressor
- Pre-charged with refrigerant volume for piping length up to 70 ft
- Low ambient cooling down to -40°F providing 100% capacity (with wind baffles)
- 24-hour continuous operation (cooling mode)
- High pressure protection
- Fast restart
- Superior energy and operational efficiency
- Seacoast protection*
  - External Outer Panel: Phosphate coating + Acrylic-Enamel coating
  - Fan Motor Support: Epoxy resin coating (at edge face)
  - Separator Assembly Valve Bed: Epoxy resin coating (at edge face)
  - Blue Fin treatment is an anti-corrosion treatment that is applied to the Heat exchanger coil to protect it against airborne contaminants.
  - Heat exchanger coil and base panel rated for 2,000 hours in accordance with ASTM B117 testing

*Seacoast protection standard from 2022 production

Specifications are subject to change without notice.

© 2023 Mitsubishi Electric Trane HVAC US LLC. All rights reserved.

# SPECIFICATIONS: PKA-A12LA & PUY-A12NKA7

| | | | |
|---|---|---|---|
| Cooling at 95°F[1] | Maximum Capacity | BTU/H | 12,000 |
| | Rated Capacity | BTU/H | 12,000 |
| | Minimum Capacity | BTU/H | 4,400 |
| | Maximum Power Input | W | 900 |
| | Rated Power Input | W | 900 |
| | Moisture Removal | Pints/h | 2.7 |
| | Sensible Heat Factor | | 0.88 |
| | Power Factor [208V / 230V] | % | 92.5 / 92.5 |
| Efficiency | SEER \| SEER2 | | 21.0 \| 21.3 |
| | EER[1] \| EER2[1] | | 13.3 \| 13.3 |
| | ENERGY STAR® Certified | | Yes |
| Electrical | Voltage, Phase, Frequency | | 208/230, 1, 60 |
| | Guaranteed Voltage Range | V AC | 198 - 253 |
| | Voltage: Indoor - Outdoor, S1-S2 | V AC | 208/230 |
| | Voltage: Indoor - Outdoor, S2-S3 | V DC | 24 |
| | Short-circuit Current Rating [SCCR] | kA | 5 |
| | Recommended Fuse/Breaker Size (Oudoor) | A | 15 |
| | Recommended Wire Size [Indoor - Outdoor] | AWG | 14 |
| | Power Supply | | Indoor unit is powered by the outdoor unit |
| Indoor Unit | MCA | A | 1.0 |
| | Fan Motor Full Load Amperage | A | 0.19 |
| | Fan Motor Type | | DC Motor |
| | Airflow Rate at Cooling, Dry | CFM | 265–310–385–455 |
| | Airflow Rate at Cooling, Wet | CFM | 215–255–320–375 |
| | Airflow Rate at Heating, Dry | CFM | 265–290–325–385 |
| | Sound Pressure Level [Cooling] | dB[A] | 34–39–44–48 |
| | Sound Pressure Level [Heating] | dB[A] | 34–37–40–43 |
| | Drain Pipe Size | In. [mm] | 5/8 [16] |
| | Condensate Lift Mechanism, Maximum Distance | In. [mm] | 19-11/16 [850] |
| | Coating on Heat Exchanger | | — |
| | External Finish Color | | White Munsell 0.7PB 9.2/0.4 |
| | Unit Dimensions | W x D x H: In. [mm] | 35-23/64 x 9-11/32 x 11-25/32 [898 x 237 x 299] |
| | Package Dimensions | W x D x H: In. [mm] | 38-3/16 x 13-25/64 x 14-11/64 [970 x 340 x 360] |
| | Unit Weight | Lbs. [kg] | 28 [12.7] |
| | Package Weight | Lbs. [kg] | 32 [14.5] |
| Indoor Unit Operating Temperature Range | Cooling Intake Air Temp [Maximum / Minimum]* | °F | 90 DB, 73 WB / 66 DB, 59 WB |
| Outdoor Unit | MCA | A | 11.0 |
| | MOCP | A | 28 |
| | Fan Motor Full Load Amperage | A | 0.5 |
| | Fan Motor Output | W | 46 |
| | Airflow Rate [Cooling / Heating] | CFM | 1590 |
| | Refrigerant Control | | LEV |
| | Defrost Method | | Reverse Cycle |
| | Coating on Heat Exchanger | | Blue Fin Coating*** |
| | Sound Pressure Level, Cooling[1] | dB(A) | 44 |
| | Compressor Type | | INVERTER-driven twin rotary |
| | Compressor Model | | SNB092FQCMC |
| | Compressor Rated Load Amps | A | 7 |
| | Compressor Locked Rotor Amps | A | 12.0 |
| | Compressor Oil [Type // Charge] | oz. | FV50S // 12 |
| | External Finish Color | | Ivory Munsell 3Y 7.8/1.1 |
| | Base Pan Heater | | N/A |
| | Unit Dimensions | W x D x H: In. [mm] | 31-13/16 (+2-7/16) x 11-13/16 x 24-13/16 [809 (+62) x 300 x 630] |
| | Package Dimensions | W x D x H: In. [mm] | 37-1/16 x 16-3/16 x 27-7/16 [941 x 411 x 697] |
| | Unit Weight | Lbs. [kg] | 92 [41] |
| | Package Weight | Lbs. [kg] | 103 [46] |
| Outdoor Unit Operating Temperature Range | Cooling Air Temp [Maximum / Minimum]* | °F | 115 DB / -40 DB |

NOTES:
AHRI Rated Conditions [1]Cooling (Indoor // Outdoor) °F 80 DB, 67 WB // 95 DB, 75 WB

Select high sensible versus high latent capacity mode via function setting mode 08, “Fan speed” (accessible through Touch MA, Deluxe MA, kumo touch and kumo cloud app control options):
- ”High ceiling” mode = high sensible capacity
  - » Mode 08, setting 3 (factory default)
- ”Standard” mode = high latent capacity
  - » Mode 08, setting 2

*Indoor/Outdoor Unit Operating Temperature Range (Cooling Air Temp [Maximum / Minimum]):
- Wind baffles required to operate below 23˚F DB in cooling mode.
- Heat pump system with wind baffle: 0°F - 115°F.
- Refer to wind baffle documentation for further information.

**Outdoor Unit Operating Temperature Range (Cooling Thermal Lock-out / Re-start Temperatures; Heating Thermal Lock-out / Re-start Temperatures):
- System cuts out in heating mode to avoid thermistor error and automatically restarts at these temperatures.

***Blue Fin Coating Standard from 2022 production:
- PU(Y/Z)-A(12/18)NKA7 - Beginning with serial number 12U*****
- PU(Y/Z)-A(24/30/36/42)NKA7 - Beginning with serial number 1ZU*****


© 2023 Mitsubishi Electric Trane HVAC US LLC. All rights reserved.

# SPECIFICATIONS: PKA-A12LA & PUY-A12NKA7

| | | | |
|---|---|---|---|
| Refrigerant | Type | | R410A |
| | Pre-Charged Refrigerant Amount | Lbs, oz | 4.0, 7.0 |
| | Maximum Pre-Charged Piping Length | Ft. [m] | 70.0 [21.0] |
| | Additional Refrigerant Charge Per Additional Piping Length | oz./Ft. [g/m] | .1 [1] |
| Piping | Gas Pipe Size O.D. [Flared] | In.[mm] | 1/2 [12.7] |
| | Liquid Pipe Size O.D. [Flared] | In.[mm] | 1/4 [6.35] |
| | Maximum Piping Length | Ft. [m] | 165 [50] |
| | Maximum Height Difference | Ft. [m] | 100 [30] |
| | Maximum Number of Bends | | 15 |

NOTES:
AHRI Rated Conditions [1]Cooling (Indoor // Outdoor) °F 80 DB, 67 WB // 95 DB, 75 WB

Select high sensible versus high latent capacity mode via function setting mode 08, “Fan speed” (accessible through Touch MA, Deluxe MA, kumo touch and kumo cloud app control options):
- ”High ceiling” mode = high sensible capacity
  - » Mode 08, setting 3 (factory default)
- ”Standard” mode = high latent capacity
  - » Mode 08, setting 2

*Indoor/Outdoor Unit Operating Temperature Range (Cooling Air Temp [Maximum / Minimum]):
- Wind baffles required to operate below 23˚F DB in cooling mode.
- Heat pump system with wind baffle: 0°F - 115°F.
- Refer to wind baffle documentation for further information.

**Outdoor Unit Operating Temperature Range (Cooling Thermal Lock-out / Re-start Temperatures; Heating Thermal Lock-out / Re-start Temperatures):
- System cuts out in heating mode to avoid thermistor error and automatically restarts at these temperatures.

***Blue Fin Coating Standard from 2022 production:
- PU(Y/Z)-A(12/18)NKA7 - Beginning with serial number 12U*****
- PU(Y/Z)-A(24/30/36/42)NKA7 - Beginning with serial number 1ZU*****


© 2023 Mitsubishi Electric Trane HVAC US LLC. All rights reserved.

# INDOOR UNIT ACCESSORIES: PKA-A12LA

| | | |
|---|---|---|
| Control Interface | 3-Pin Connector | ☐ PAC-715AD |
| | BACnet® and Modbus® Interface | ☐ PAC-UKPRC001-CN-1 |
| | IT Extender | ☐ PAC-WHS01IE-E |
| | kumo station® for kumo cloud® | ☐ TAC-WHS01HC-E |
| | Thermostat Interface | ☐ PAC-US444CN-1 |
| | Thermostat Interface | ☐ PAC-US445CN-1 |
| | USNAP Adapter | ☐ PAC-WHS01UP-E |
| | Wireless Interface for kumo cloud® | ☐ PAC-USWHS002-WF-2 |
| Remote Sensor | Flush Mount Remote Temperature Sensor | ☐ PAC-USSEN002-FM-1 |
| | Flush Mount Temperature Sensor | ☐ PAC-USSEN001-FM-1 |
| | Remote Temperature Sensor | ☐ PAC-SE41TS-E |
| | Wireless temperature and humitity sensor for kumo cloud® | ☐ PAC-USWHS003-TH-1 |
| Wired Remote Controller | Deluxe Wired MA Remote Controller† | ☐ AAR-40MAAU |
| | Simple Ductless Wired Remote Controller | ☐ PAC-SDW01RC-1 |
| | Simple MA Remote Controller† | ☐ PAC-YT53CRAU-J |
| | Touch MA Controller† | ☐ PAR-CT01MAU-SB |
| Wireless Remote Controller | kumo touch™ RedLINK™ Wireless Controller | ☐ MHK2 |
| | Lockdown bracket for remote controller | ☐ RCMKP1CB |
| | Wireless MA Remote Controller | ☐ PAR-FL32MA-E |
| Condensate | Blue Diamond (Advanced) Mini Condensate Pump w/ Reservoir & Sensor (208/230V) [recommended] | ☐ X87-721 |
| | Blue Diamond (MicroBlue) Mini Condensate Pump (110/208/230V) up to 18,000 BTU/H | ☐ X86-003 |
| | Blue Diamond Sensor Extension Cable — 15 Ft. | ☐ C13-103 |
| | Drain Pan Level Sensor/Control | ☐ SS610E |
| | Fascia Kit for MicroBlue Pump, mounts the MicroBlue and sensor directly beneath indoor unit | ☐ T18-016 |
| | Refco Condensate Pump (100-240 VAC) | ☐ GOBI-II |
| | Refco Condensate Pump (100-240 VAC) up to 120,000 BTU/H | ☐ COMBI |
| | Sauermann Condensate Pump | ☐ SI30-230 |
| Disconnect Switch | (30A/600V/UL) [fits 2” X 4” utility box] - Black | ☐ TAZ-MS303 |
| | (30A/600V/UL) [fits 2” X 4” utility box] - White | ☐ TAZ-MS303W |
| Lineset | 100’ x 1/4” x 100’ / 1/2” Lineset (Twin-Tube Insulation) | ☐ MLS141212T-100 |
| | 15’ x 1/4” x 15’ / 1/2” Lineset (Twin-Tube Insulation) | ☐ MLS141212T-15 |
| | 30’ x 1/4” x 30’ / 1/2” Lineset (Twin-Tube Insulation) | ☐ MLS141212T-30 |
| | 50’ x 1/4” x 50’ / 1/2” Lineset (Twin-Tube Insulation) | ☐ MLS141212T-50 |
| | 65’ x 1/4” x 65’ / 1/2” Lineset (Twin-Tube Insulation) | ☐ MLS141212T-65 |

Specifications are subject to change without notice.

© 2023 Mitsubishi Electric Trane HVAC US LLC. All rights reserved.

# OUTDOOR UNIT ACCESSORIES: PUY-A12NKA7

| | | |
|---|---|---|
| Air Outlet Guide | Air Outlet Guide | ☐ PAC-SJ07SG-E |
| Centralized Drain Pan | Centralized Drain Pan | ☐ PAC-SG63DP-E |
| | Drain Pan | ☐ PAC-SG64DP-E |
| Control/Service Tool | Control/Service Tool | ☐ PAC-SK52ST |
| | M- & P-Series Maintenance Tool Cable Set | ☐ M21EC0397 |
| | USB/UART Conversion Cable (Required for all laptop connection) | ☐ M21EC1397 |
| Drain Socket | Drain Socket | ☐ MAC-871DS |
| Hail Guards | Hail Guard | ☐ HG-A5 |
| M-NET Converter | M-NET Converter | ☐ PAC-SJ96MA-E |
| Mini-Split Wire | 14 Gauge, 4 wire MiniSplit Cable—250 ft. roll | ☐ S144-250 |
| | 14 Gauge, 4 wire MiniSplit Cable—50 ft. roll | ☐ S144-50 |
| | 16 Gauge, 4 wire MiniSplit Cable—250 ft. roll | ☐ S164-250 |
| | 16 Gauge, 4 wire MiniSplit Cable—50 ft. roll | ☐ S164-50 |
| Mounting Pad | Condensing Unit Mounting Pad: 16” x 36” x 3” | ☐ ULTRILITE1 |
| Stand | 18” Single Fan Stand | ☐ QSMS1801M |
| | 24” Single Fan Stand | ☐ QSMS2401M |
| | Condenser Wall Bracket | ☐ QSWB2000M-1 |
| | Condenser Wall Bracket - Stainless Steel Finish | ☐ QSWBSS |
| | Outdoor Unit Stand — 12” High | ☐ QSMS1201M |
| Wind Baffle | Front Wind Baffle | ☐ WB-PA4 |
| | Rear Wind Baffle | ☐ WB-RE4 |
| | Side Advanced Wind Baffle | ☐ WB-SD4 |


© 2023 Mitsubishi Electric Trane HVAC US LLC. All rights reserved.

# INDOOR UNIT DIMENSIONS: PKA-A12LA

Unit: inch (mm)

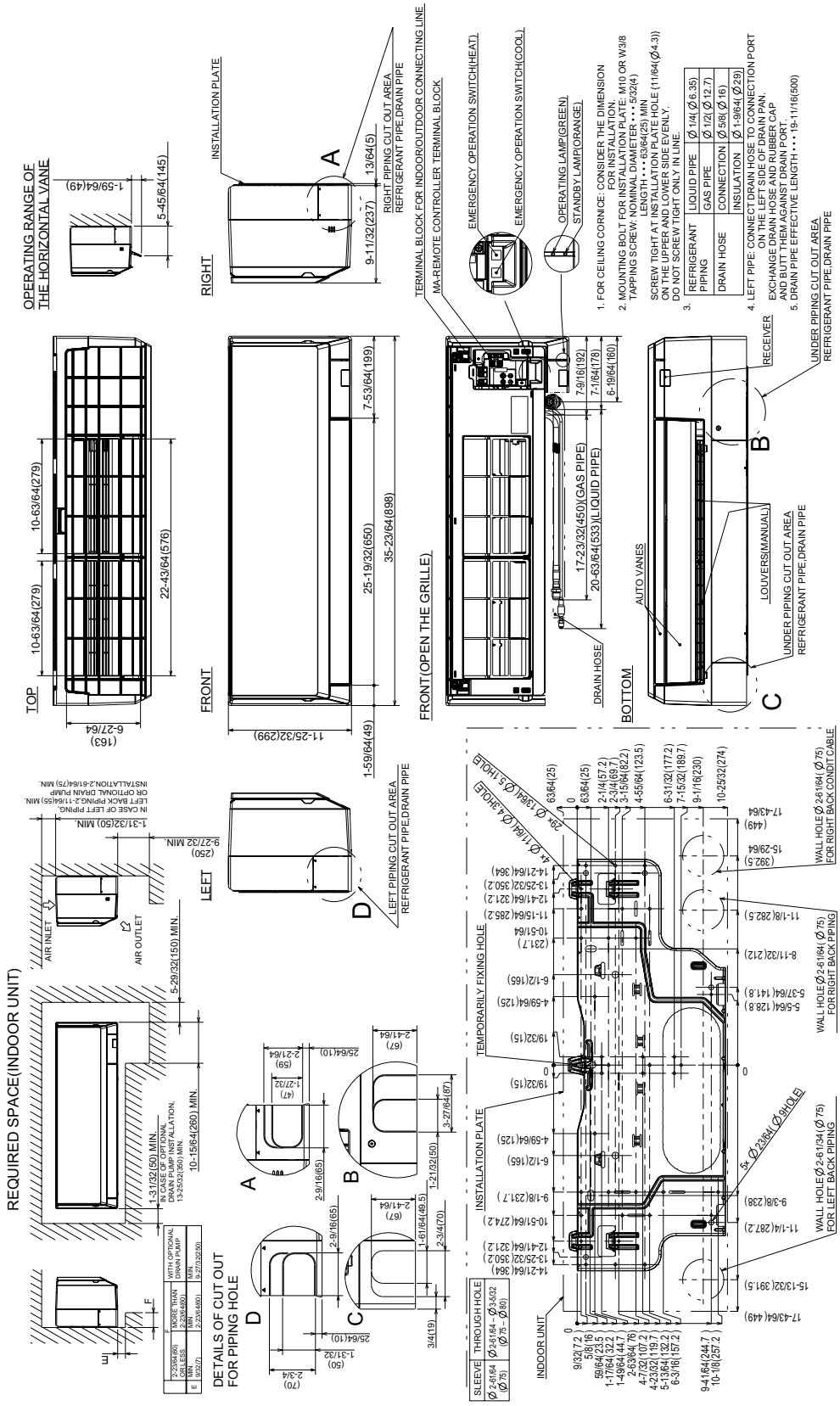




© 2023 Mitsubishi Electric Trane HVAC US LLC. All rights reserved.

# OUTDOOR UNIT DIMENSIONS: PUY-A12NKA7

**Unit: mm<in>**

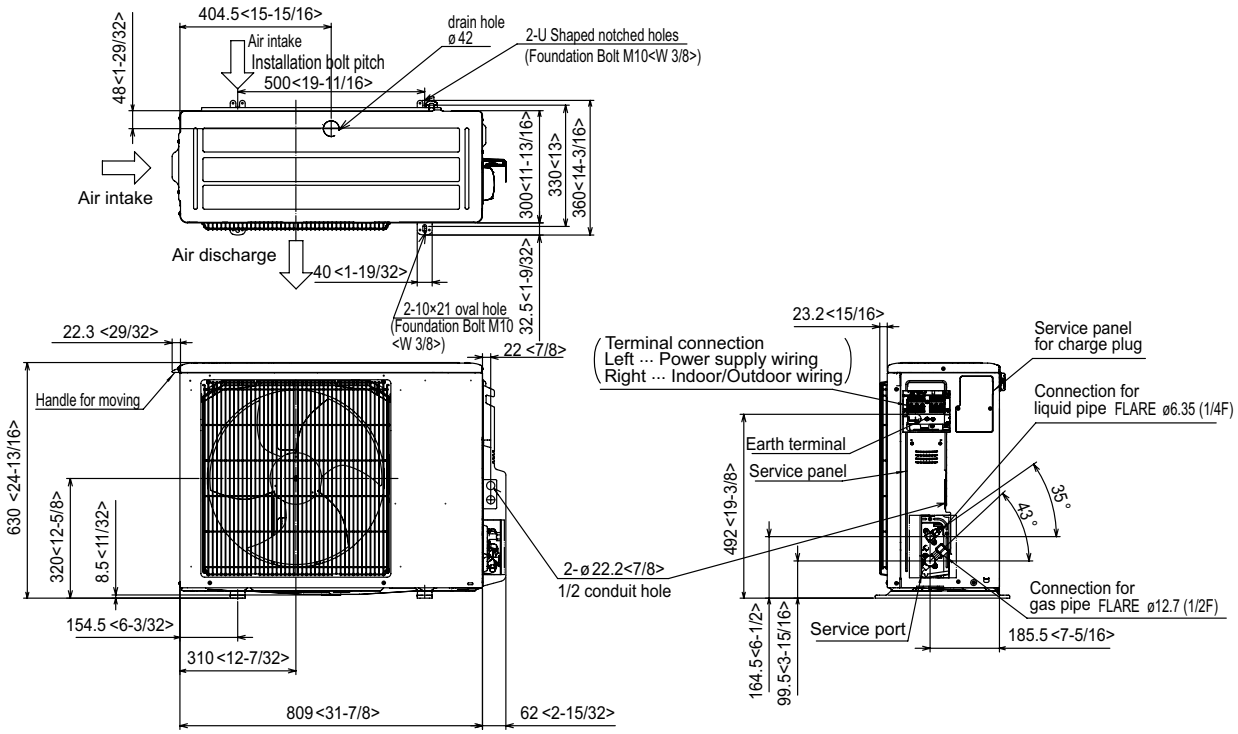


## Free space around the outdoor unit (basic example)

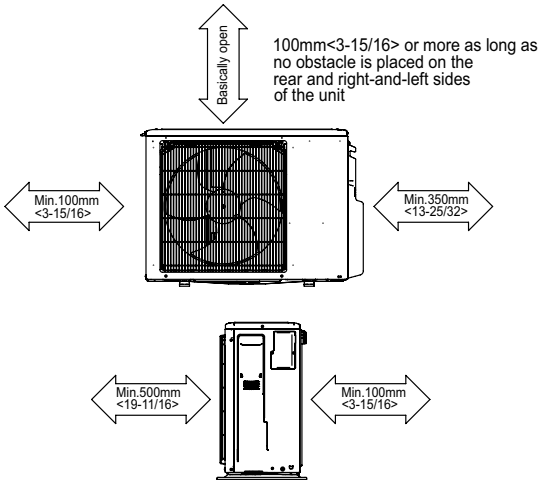


2 sides should be open in
the right, left and rear side.

## FOUNDATION BOLTS

Please secure the unit firmly
with 4 foundation (M10<W3/8>) bolts.
(Bolts, washers and nut must
be purchased locally).

<Foundation bolt height>

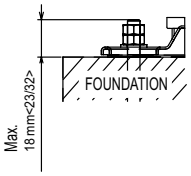


## PIPING-WIRING DIRECTION

Piping and wiring connection can
be made from the rear direction only.

FORM# PKA-A12LA & PUY-A12NKA7 - 202304

Specifications are subject to change without notice.

© 2023 Mitsubishi Electric Trane HVAC US LLC. All rights reserved.