PEAD-A18AA8 & NAXSKS18A112AA
MID STATIC HORIZONTAL-DUCTED INDOOR UNIT
18,000 BTU/H HEAT PUMP UNIVERSAL OUTDOOR UNIT

American Standard HEATING & AIR CONDITIONING

MITSUBISHI ELECTRIC

Job Name:	
System Reference:	Date:

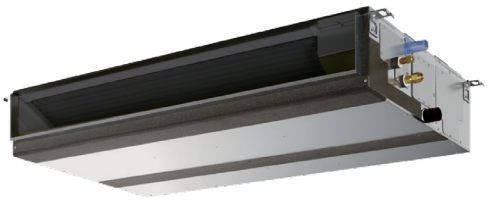

Indoor Unit PEAD-A18AA8

Outdoor Unit NAXSKS18A112AA

INDOOR UNIT FEATURES
- Unobtrusive ceiling-concealed design for short-run ductwork
- Wide ranging external static pressure (0.14-0.60 in. WG)
- Built-in condensate lift mechanism (up to 27-9/16”)
- Auto fan speed mode
- Optional FB Series filter boxes for easy access and service
- Ideal for residential homes, retail shopping centers, larger classrooms, office complexes, conference rooms, ballrooms, fitness centers, and more
- Multiple control options available:
  - kumo cloud® smart device app for remote access
  - Third-party interface options
  - Wired or wireless controllers

OUTDOOR UNIT FEATURES
- Variable speed INVERTER-driven compressor
- Innovative Joint Lap DC Motor leads to high efficiency and reliability
- Pulse Amplitude Modulation technology
- High-performance grooved piping for increased heat exchange efficiency

Specifications are subject to change without notice.

© 2023 Mitsubishi Electric Trane HVAC US LLC. All rights reserved.

SPECIFICATIONS: PEAD-A18AA8 & NAXSKS18A112AA

Cooling at 95°F[1]	Maximum Capacity	BTU/H	18,000
	Rated Capacity	BTU/H	18,000
	Minimum Capacity	BTU/H	6,200
	Maximum Power Input	W	1,270
	Rated Power Input	W	1,270
	Moisture Removal	Pints/h	3.2
	Sensible Heat Factor		0.8
	Power Factor [208V / 230V]	%	96.0 / 96.0
Heating at 47°F[2]	Maximum Capacity	BTU/H	25,600
	Rated Capacity	BTU/H	21,600
	Minimum Capacity	BTU/H	8,120
	Maximum Power Input	W	2,140
	Rated Power Input	W	1,600
	Power Factor [208V / 230V]	%	97.0 / 97.0
Heating at 17°F[3]	Maximum Capacity	BTU/H	16,500
	Rated Capacity	BTU/H	14,000
	Maximum Power Input	W	1,960
	Rated Power Input	W	1,440
Heating at 5°F[4]	Maximum Capacity	BTU/H	12,000
	Maximum Power Input	W	1,230
Heating at -4°F[5]	Maximum Capacity	BTU/H	8,900
Efficiency	SEER | SEER2		19.8 | 20.7
	EER[1] | EER2[1]		14.1 | 13.2
	HSPF [IV] | HSPF2 [IV]		12.9 | 10.8
	COP at 47°F[2]		3.9
	COP at 17°F at Maximum Capacity[3]		2.4
	COP at 5°F at Maximum Capacity[4]		2.8
	ENERGY STAR® Certified		Yes
Electrical	Voltage, Phase, Frequency		208/230, 1, 60
	Guaranteed Voltage Range	V AC	187 - 253
	Voltage: Indoor - Outdoor, S1-S2	V AC	208/230
	Voltage: Indoor - Outdoor, S2-S3	V DC	24
	Short-circuit Current Rating [SCCR]	kA	5
	Recommended Fuse/Breaker Size (Oudoor)	A	15
	Recommended Wire Size [Indoor - Outdoor]	AWG	14
	Power Supply		Indoor unit is powered by the outdoor unit
Indoor Unit	MCA	A	2.44
	Fan Motor Full Load Amperage	A	1.95
	Fan Motor Output	W	121
	Fan Motor Type		DC Motor
	Airflow Rate at Cooling, Dry	CFM	424–512–600
	Airflow Rate at Cooling, Wet	CFM	382–461–540
	Airflow Rate at Heating, Dry	CFM	424–512–600
	Sound Pressure Level [Cooling]	dB[A]	29–34–37
	Sound Pressure Level [Heating]	dB[A]	29–34–37
	External Static Pressure	in.WG	0.14–0.2–0.28–0.4–0.6
	Drain Pipe Size	In. [mm]	1-1/4 [32]
	Condensate Lift Mechanism, Maximum Distance	In. [mm]	27-9/16 [700]
	Coating on Heat Exchanger		—
	External Finish Color		Galvanized
	Unit Dimensions	W x D x H: In. [mm]	35-7/16 x 28-7/8 x 9-7/8 [900 x 732 x 250]
	Package Dimensions	W x D x H: In. [mm]	46-1/16 x 35-7/16 x 13 [1,170 x 900 x 330]
	Unit Weight	Lbs. [kg]	60 [27]
	Package Weight	Lbs. [kg]	71 [32]
Indoor Unit Operating Temperature Range	Cooling Intake Air Temp [Maximum / Minimum]*	°F	90 DB, 72 WB / 66 DB, 61 WB
	Heating Intake Air Temp [Maximum / Minimum]	°F	77 DB / 59 DB

NOTES:

AHRI Rated Conditions (Rated data is determined at a fixed compressor speed)	[1]Cooling (Indoor // Outdoor)	°F	80 DB, 67 WB // 95 DB, 75 WB
	[2]Heating at 47°F (Indoor // Outdoor)	°F	70 DB, 60 WB // 47 DB, 43 WB
	[3]Heating at 17°F (Indoor // Outdoor)	°F	70 DB, 60 WB // 17 DB, 15 WB
Conditions	[4]Heating at 5°F (Indoor // Outdoor)	°F	70 DB, 60 WB // 5 DB, 4 WB
	[5]Heating at -4°F (Indoor // Outdoor)	°F	70 DB, 60 WB // -4 DB, -5 WB

*Indoor/Outdoor Unit Operating Temperature Range (Cooling Air Temp [Maximum / Minimum]):
- Applications should be restricted to comfort cooling only; equipment cooling applications are not recommended for low ambient temperature conditions.

**Outdoor Unit Operating Temperature Range (Cooling Thermal Lock-out / Re-start Temperatures; Heating Thermal Lock-out / Re-start Temperatures):
- System cuts out in heating mode to avoid thermistor error and automatically restarts at these temperatures.

© 2023 Mitsubishi Electric Trane HVAC US LLC. All rights reserved.

SPECIFICATIONS: PEAD-A18AA8 & NAXSKS18A112AA

Outdoor Unit	MCA	A	14.0
	MOCP	A	24
	Fan Motor Full Load Amperage	A	0.7
	Fan Motor Output	W	77
	Airflow Rate [Cooling / Heating]	CFM	1691 / 1691
	Refrigerant Control		LEV
	Defrost Method		Reverse Cycle
	Coating on Heat Exchanger		Blue Fin Coating
	Sound Pressure Level, Cooling[1]	dB(A)	54
	Sound Pressure Level, Heating[2]	dB(A)	55
	Compressor Type		DC INVERTER-driven Twin Rotary
	Compressor Model		SNB130FQBMT
	Compressor Rated Load Amps	A	10
	Compressor Locked Rotor Amps	A	12.5
	Compressor Oil [Type // Charge]	oz.	FV50S //11.8
	External Finish Color		Ivory Munsell 3Y 7.8/1.1
	Base Pan Heater		Optional
	Unit Dimensions	W x D x H: In. [mm]	33-1/16 x 13 x 34-5/8 [840 x 330 x 880]
	Package Dimensions	W x D x H: In. [mm]	38-3/4 x 16-3/4 x 39 [980 x 420 x 990]
	Unit Weight	Lbs. [kg]	127 [58]
	Package Weight	Lbs. [kg]	145 [66]
Outdoor Unit Operating Temperature Range	Cooling Air Temp [Maximum / Minimum]*	°F	115 DB / 14 DB
	Cooling Thermal Lock-out / Re-start Temperatures**	°F	-1 / 3
	Heating Air Temp [Maximum / Minimum]	°F	75 DB, 65 WB / -4 DB, -5 WB
	Heating Thermal Lock-out / Re-start Temperatures**	°F	-14 / -4
Refrigerant	Type		R410A
	Pre-Charged Refrigerant Amount	Lbs, oz	3.0, 9.0
	Maximum Pre-Charged Piping Length	Ft. [m]	25.0 [7.5]
	Additional Refrigerant Charge Per Additional Piping Length	oz./Ft. [g/m]	0.216 [20]
Piping	Gas Pipe Size O.D. [Flared]	In.[mm]	1/2 [12.7]
	Liquid Pipe Size O.D. [Flared]	In.[mm]	1/4 [6.35]
	Maximum Piping Length	Ft. [m]	100 [30]
	Maximum Height Difference	Ft. [m]	50 [15]
	Maximum Number of Bends		10

NOTES:

AHRI Rated Conditions (Rated data is determined at a fixed compressor speed)	[1]Cooling (Indoor // Outdoor)	°F	80 DB, 67 WB // 95 DB, 75 WB
	[2]Heating at 47°F (Indoor // Outdoor)	°F	70 DB, 60 WB // 47 DB, 43 WB
	[3]Heating at 17°F (Indoor // Outdoor)	°F	70 DB, 60 WB // 17 DB, 15 WB
Conditions	[4]Heating at 5°F (Indoor // Outdoor)	°F	70 DB, 60 WB // 5 DB, 4 WB
	[5]Heating at -4°F (Indoor // Outdoor)	°F	70 DB, 60 WB // -4 DB, -5 WB

*Indoor/Outdoor Unit Operating Temperature Range (Cooling Air Temp [Maximum / Minimum]):
- Applications should be restricted to comfort cooling only; equipment cooling applications are not recommended for low ambient temperature conditions.

**Outdoor Unit Operating Temperature Range (Cooling Thermal Lock-out / Re-start Temperatures; Heating Thermal Lock-out / Re-start Temperatures):
- System cuts out in heating mode to avoid thermistor error and automatically restarts at these temperatures.

Specifications are subject to change without notice.

© 2023 Mitsubishi Electric Trane HVAC US LLC. All rights reserved.

INDOOR UNIT ACCESSORIES: PEAD-A18AA8

Control Interface	3-Pin Connector	☐ PAC-715AD
	Airzone ZBS Wired Blueface Principal Controller White	☐ AZZBSBLUEFACECB
	Airzone ZBS Wired Blueface Principal Controller White	☐ AZZBSBLUEZEROCB
	Airzone ZBS Wired Lite Controller White	☐ AZZBSLITECB
	Airzone ZBS Wireless Lite Controller White	☐ AZZBSLITERB
	Airzone ZBS Wireless Think Controller White	☐ AZZBSTHINKRB
	BACnet® and Modbus® Interface	☐ PAC-UKPRC001-CN-1
	CN24 Relay Kit	☐ CN24RELAY-KIT-CM3
	IT Extender	☐ PAC-WHS01IE-E
	kumo station® for kumo cloud®	☐ TAC-WHS01HC-E
	Remote Operation Adapter‡	☐ PAC-SF40RM-E
	Thermostat Interface	☐ PAC-US444CN-1
	Thermostat Interface	☐ PAC-US445CN-1
	USNAP Adapter	☐ PAC-WHS01UP-E
	Wireless Interface for kumo cloud®	☐ PAC-USWHS002-WF-2
Remote Sensor	Flush Mount Remote Temperature Sensor	☐ PAC-USSEN002-FM-1
	Flush Mount Temperature Sensor	☐ PAC-USSEN001-FM-1
	Remote Temperature Sensor	☐ PAC-SE41TS-E
	Wireless temperature and humitity sensor for kumo cloud®	☐ PAC-USWHS003-TH-1
Wired Remote Controller	Deluxe Wired MA Remote Controller†	☐ AAR-40MAAU
	Simple Ductless Wired Remote Controller	☐ PAC-SDW01RC-1
	Simple MA Remote Controller†	☐ PAC-YT53CRAU-J
	Touch MA Controller†	☐ PAR-CT01MAU-SB
Wireless Remote Controller	kumo touch™ RedLINK™ Wireless Controller	☐ MHK2
	Lockdown bracket for remote controller	☐ RCMKP1CB
	Wireless MA Receiver	☐ PAR-SR32MA-E
	Wireless MA Remote Controller	☐ PAR-FL32MA-E
Condensate	Blue Diamond (Advanced) Mini Condensate Pump w/ Reservoir & Sensor (208/230V) [recommended]	☐ X87-721
	Blue Diamond (MegaBlue Advanced) Condensate Pump w/ Reservoir & Sensor	☐ X87-835
	Blue Diamond Sensor Extension Cable — 15 Ft.	☐ C13-103
	Refco Condensate Pump (100-240 VAC) up to 120,000 BTU/H	☐ COMBI
Control Wire	20/2PR, 1PR shielded + 1PR plenum wire for Airzone, 100 ft reel	☐ CW2042S2-100
	20/2PR, shielded + 1PR plenum wire for Airzone, 500 ft reel	☐ CW2042S2-500
Disconnect Switch	(30A/600V/UL) [fits 2” X 4” utility box] - Black	☐ TAZ-MS303
	(30A/600V/UL) [fits 2” X 4” utility box] - White	☐ TAZ-MS303W
Filter Box	Filter Box with MERV 13 Filter	☐ FBM2-2-A
Lineset	100’ x 1/4” x 100’ / 1/2” Lineset (Twin-Tube Insulation)	☐ MLS141212T-100
	15’ x 1/4” x 15’ / 1/2” Lineset (Twin-Tube Insulation)	☐ MLS141212T-15
	30’ x 1/4” x 30’ / 1/2” Lineset (Twin-Tube Insulation)	☐ MLS141212T-30
	50’ x 1/4” x 50’ / 1/2” Lineset (Twin-Tube Insulation)	☐ MLS141212T-50
	65’ x 1/4” x 65’ / 1/2” Lineset (Twin-Tube Insulation)	☐ MLS141212T-65

NOTES:
‡PAC-SF40RM-E (Unable to use with wireless remote controller)

© 2023 Mitsubishi Electric Trane HVAC US LLC. All rights reserved.

OUTDOOR UNIT ACCESSORIES: NAXSKS18A112AA

Air Outlet Guide	Air Outlet Guide	☐ MAC-886SG-E
Control/Service Tool	M- & P-Series Maintenance Tool Cable Set	☐ M21EC0397
	USB/UART Conversion Cable (Required for all laptop connection)	☐ M21EC1397
Mini-Split Wire	14 Gauge, 4 wire MiniSplit Cable—250 ft. roll	☐ S144-250
	14 Gauge, 4 wire MiniSplit Cable—250 ft. roll	☐ SW144-250
	14 Gauge, 4 wire MiniSplit Cable—50 ft. roll	☐ S144-50
	14 Gauge, 4 wire MiniSplit Cable—50 ft. roll	☐ SW144-50
	16 Gauge, 4 wire MiniSplit Cable—250 ft. roll	☐ S164-250
	16 Gauge, 4 wire MiniSplit Cable—250 ft. roll	☐ SW164-250
	16 Gauge, 4 wire MiniSplit Cable—50 ft. roll	☐ S164-50
	16 Gauge, 4 wire MiniSplit Cable—50 ft. roll	☐ SW164-50
Mounting Pad	Condensing Unit Mounting Pad: 16” x 36” x 3”	☐ ULTRILITE1
	Outdoor Unit 3-1/4 inch Mounting Base (Pair) - Plastic	☐ DSD-400P
Optional Defrost Heater	Base Heater	☐ MAC-642BH-U1
Stand	18” Single Fan Stand	☐ QSMS1801M
	24” Single Fan Stand	☐ QSMS2401M
	Condenser Wall Bracket	☐ QSWB2000M-1
	Outdoor Unit Stand — 12” High	☐ QSMS1201M

© 2023 Mitsubishi Electric Trane HVAC US LLC. All rights reserved.

INDOOR UNIT DIMENSIONS: PEAD-A18AA8

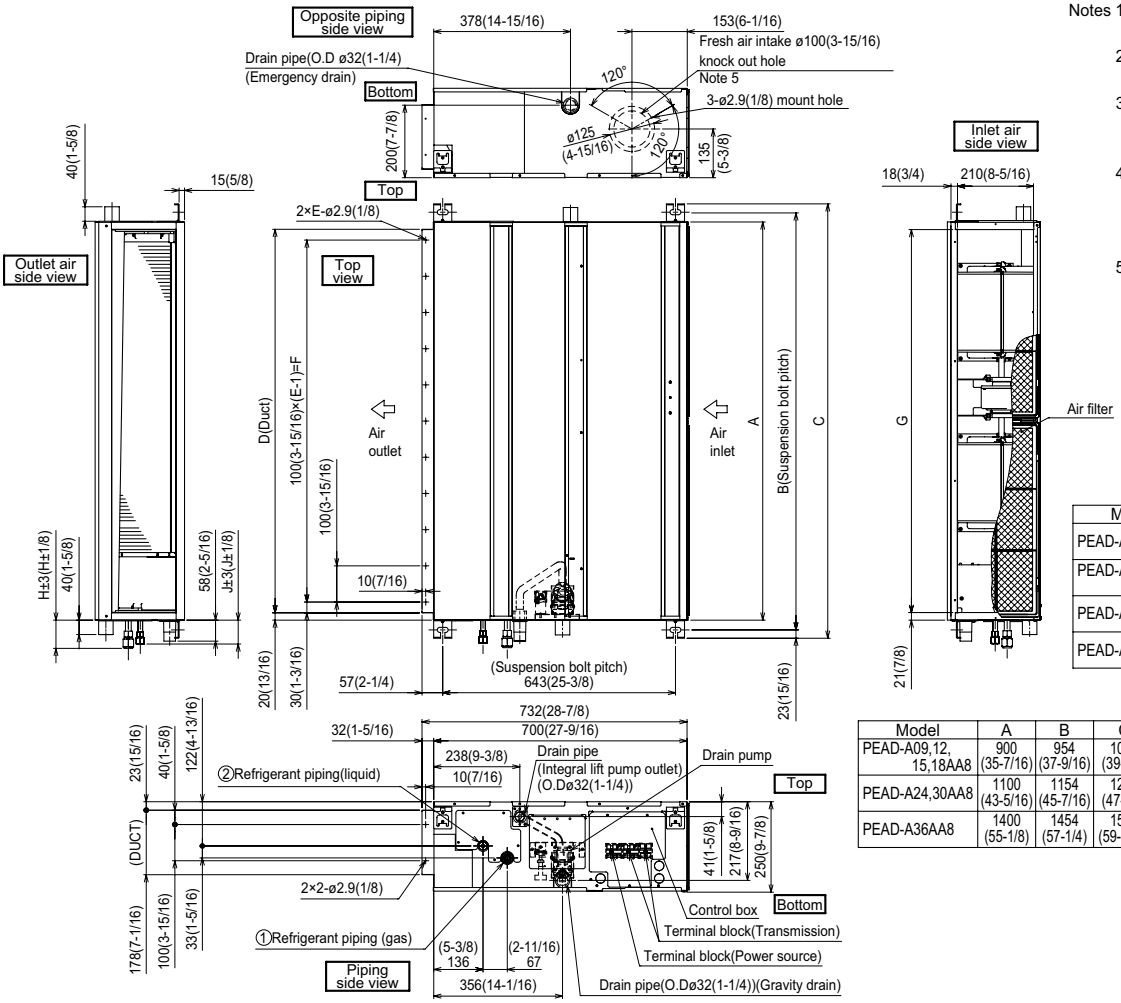

Notes 1.Use an M10 screw for the suspension bolt (field supply).
2.Keep the service space for maintenance at the bottom.
3.This drawing is for PEAD-A09·12·15·18·24·30AA8 models,which have 2 fans. PEAD-A36AA8 model has 3 fans.
4.If the inlet duct is used,remove the air filter(supplied with the unit),then install the filter(field supply) at the suction side.
5.Heat air to 0°C(32°F) or higher when taking fresh air with a fresh air intake.

Unit:mm(in.)

Model	J	①Gas pipe	②Liquid pipe
PEAD-A09AA8	62 (2-1/2)	ø9.52 (3/8)	ø6.35 (1/4)
PEAD-A12,15, 18AA8	62 (2-1/2)	ø12.7 (1/2)	ø6.35 (1/4)
PEAD-A24,30AA8	66 (2-5/8)	ø15.88 (5/8)	ø9.52 (3/8)
PEAD-A36AA8			

Unit:mm(in.)

Model	A	B	C	D	E	F	G	H
PEAD-A09,12, 15,18AA8	900 (35-7/16)	954 (37-9/16)	1000 (39-3/8)	860 (33-7/8)	9	800 (31-1/2)	858 (33-13/16)	72 (2-7/8)
PEAD-A24,30AA8	1100 (43-5/16)	1154 (45-7/16)	1200 (47-1/4)	1060 (41-3/4)	11	1000 (39-3/8)	1058 (41-11/16)	78 (3-1/8)
PEAD-A36AA8	1400 (55-1/8)	1454 (57-1/4)	1500 (59-1/16)	1360 (53-9/16)	14	1300 (51-3/16)	1358 (53-1/2)	

© 2023 Mitsubishi Electric Trane HVAC US LLC. All rights reserved.

OUTDOOR UNIT DIMENSIONS: NAXSKS18A112AA

Unit: inch

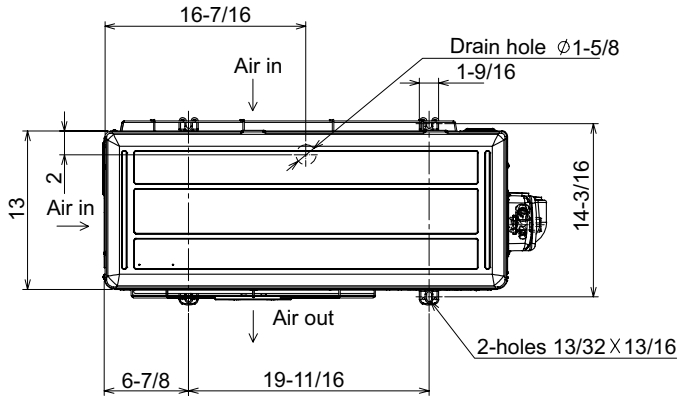

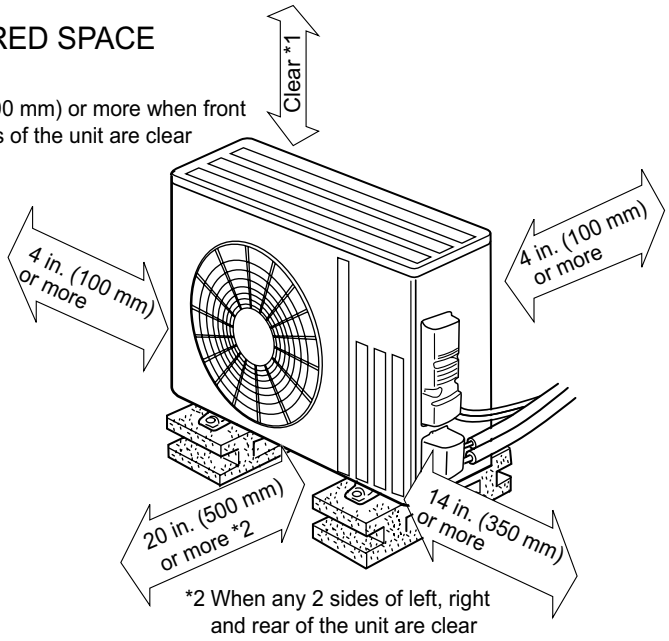

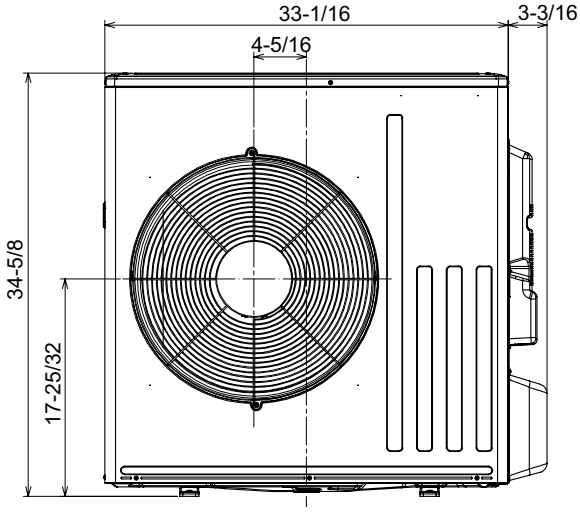

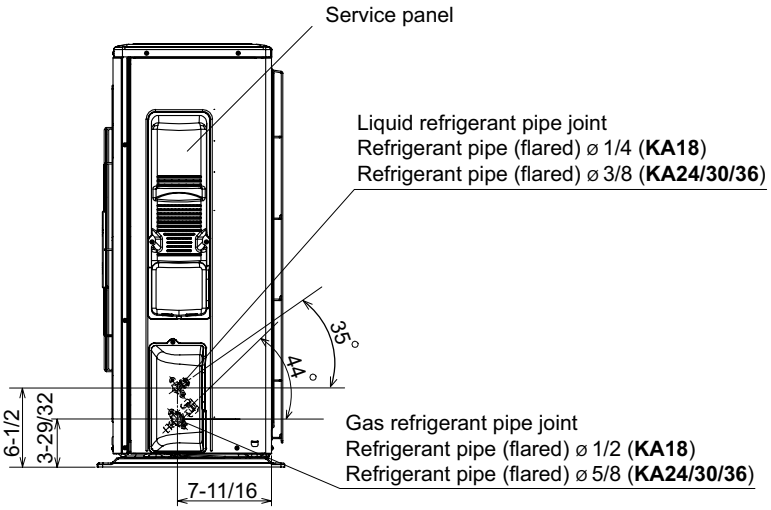

Specifications are subject to change without notice.

© 2023 Mitsubishi Electric Trane HVAC US LLC. All rights reserved.