# PCA-A30KA7 & PUY-A30NHA7
## 30,000 BTU/H CEILING-SUSPENDED INDOOR UNIT
## 30,000 BTU/H COOLING ONLY OUTDOOR

American Standard HEATING & AIR CONDITIONING

MITSUBISHI ELECTRIC

| | |
|---|---|
| Job Name: | |
| System Reference: | Date: |

Indoor Unit ..... PCA-A30KA7

Outdoor Unit ..... PUY-A30NHA7

INDOOR UNIT FEATURES
- Airflow settings for high and low ceiling applications
- Knock-out for outside-air intake
- Optional i-see Sensor™ for air distribution and energy saving
- Auto fan speed mode
- Filter status indicator
- Easy-to-clean, washable filter
- Suspends from ceiling for quick and easy installation
- Ideal for larger retail stores, classrooms, and restaurants
- Multiple control options available:
  - kumo cloud® smart device app for remote access
  - Third-party interface options
  - Wired or wireless controllers

OUTDOOR UNIT FEATURES
- Variable speed INVERTER-driven compressor
- Pre-charged with refrigerant volume for piping length up to 70 ft
- Low ambient cooling down to -40°F providing 100% capacity (with wind baffles)
- 24-hour continuous operation (cooling mode)
- High pressure protection
- Fast restart
- Superior energy and operational efficiency
- Seacoast protection*
  - External Outer Panel: Phosphate coating + Acrylic-Enamel coating
  - Fan Motor Support: Epoxy resin coating (at edge face)
  - Separator Assembly Valve Bed: Epoxy resin coating (at edge face)
  - Blue Fin treatment is an anti-corrosion treatment that is applied to the Heat exchanger coil to protect it against airborne contaminants.
  - Heat exchanger coil and base panel rated for 2,000 hours in accordance with ASTM B117 testing

*Seacoast protection standard from 2022 production



© 2023 Mitsubishi Electric Trane HVAC US LLC. All rights reserved.

# SPECIFICATIONS: PCA-A30KA7 & PUY-A30NHA7

| | | | |
|---|---|---|---|
| Cooling at 95°F[1] | Maximum Capacity | BTU/H | 30,000 |
| | Rated Capacity | BTU/H | 30,000 |
| | Minimum Capacity | BTU/H | 9,000 |
| | Maximum Power Input | W | 3,190 |
| | Rated Power Input | W | 3,190 |
| | Moisture Removal | Pints/h | 8.3 |
| | Sensible Heat Factor | | 0.69 |
| | Power Factor [208V / 230V] | % | 96.3 / 96.3 |
| Efficiency | SEER \| SEER2 | | 19.6 \| |
| | EER[1] \| EER2[1] | | 9.4 \| |
| | ENERGY STAR® Certified | | No |
| Electrical | Voltage, Phase, Frequency | | 208/230, 1, 60 |
| | Guaranteed Voltage Range | V AC | 198 - 253 |
| | Voltage: Indoor - Outdoor, S1-S2 | V AC | 208/230 |
| | Voltage: Indoor - Outdoor, S2-S3 | V DC | 24 |
| | Short-circuit Current Rating [SCCR] | kA | 5 |
| | Recommended Fuse/Breaker Size (Oudoor) | A | 25 |
| | Recommended Wire Size [Indoor - Outdoor] | AWG | 14 |
| | Power Supply | | Indoor unit is powered by the outdoor unit |
| Indoor Unit | MCA | A | 1.0 |
| | Fan Motor Full Load Amperage | A | 0.54 |
| | Fan Motor Type | | DC Motor |
| | Airflow Rate at Cooling, Dry | CFM | 565–600–635–705 |
| | Airflow Rate at Cooling, Wet | CFM | 530–565–600–670 |
| | Airflow Rate at Heating, Dry | CFM | 565–600–635–705 |
| | Sound Pressure Level [Cooling] | dB[A] | 35–37–39–41 |
| | Sound Pressure Level [Heating] | dB[A] | 35–37–39–41 |
| | Drain Pipe Size | In. [mm] | 1-1/32 [26] |
| | Coating on Heat Exchanger | | — |
| | External Finish Color | | White Munsell 6.4Y 8.9/0.4 |
| | Unit Dimensions | W x D x H: In. [mm] | 50-3/8 x 26-3/4 x 9-1/16 [1,280 x 680 x 230] |
| | Package Dimensions | W x D x H: In. [mm] | 53-1/8 x 29-15/16 x 12-5/8 [1,350 x 760 x 320] |
| | Unit Weight | Lbs. [kg] | 71 [32] |
| | Package Weight | Lbs. [kg] | 82 [37] |
| Indoor Unit Operating Temperature Range | Cooling Intake Air Temp [Maximum / Minimum]* | °F | 90 DB, 72 WB / 68 DB, 61 WB |
| Outdoor Unit | MCA | A | 19.0 |
| | MOCP | A | 26 |
| | Fan Motor Full Load Amperage | A | 0.4 |
| | Fan Motor Output | W | 86 |
| | Airflow Rate [Cooling / Heating] | CFM | 1940 |
| | Refrigerant Control | | LEV |
| | Defrost Method | | Reverse Cycle |
| | Coating on Heat Exchanger | | Blue Fin Coating*** |
| | Sound Pressure Level, Cooling[1] | dB(A) | 47 |
| | Compressor Type | | INVERTER-driven twin rotary |
| | Compressor Model | | SNB172FWHM1 |
| | Compressor Rated Load Amps | A | 7 |
| | Compressor Locked Rotor Amps | A | 11.0 |
| | Compressor Oil [Type // Charge] | oz. | FV50S // 23 |
| | External Finish Color | | Ivory Munsell 3Y 7.8/1.1 |
| | Base Pan Heater | | N/A |
| | Unit Dimensions | W x D x H: In. [mm] | 37-13/32 x 13 (+1-3/16) x 37-1/8 [950 x 330 (+30) x 943] |
| | Package Dimensions | W x D x H: In. [mm] | 40-15/16 x 17-11/16 x 40-11/16 [1040 x 450 x 1033] |
| | Unit Weight | Lbs. [kg] | 151 [68] |
| | Package Weight | Lbs. [kg] | 176 [80] |
| Outdoor Unit Operating Temperature Range | Cooling Air Temp [Maximum / Minimum]* | °F | 115 DB / -40 DB |
| Refrigerant | Type | | R410A |
| | Pre-Charged Refrigerant Amount | Lbs, oz | 7.0, 11.0 |
| | Maximum Pre-Charged Piping Length | Ft. [m] | 70.0 [20.0] |
| | Additional Refrigerant Charge Per Additional Piping Length | oz./Ft. [g/m] | 0.3 [22.5] |

NOTES:
AHRI Rated Conditions
(Rated data is determined at a fixed compressor speed) [1]Cooling (Indoor // Outdoor) °F 80 DB, 67 WB // 95 DB, 75 WB

*Indoor/Outdoor Unit Operating Temperature Range (Cooling Air Temp [Maximum / Minimum]):
- Wind baffles required to operate below 23°F DB in cooling mode.
- Cooling-only system with advanced wind baffle: -40°F - 115°F.
- Refer to wind baffle documentation for further information.

**Outdoor Unit Operating Temperature Range (Cooling Thermal Lock-out / Re-start Temperatures; Heating Thermal Lock-out / Re-start Temperatures):
- System cuts out in heating mode to avoid thermistor error and automatically restarts at these temperatures.

***Blue Fin Coating Standard from 2022 production:
- PU(Y/Z)-A(12/18)NKA7 - Beginning with serial number 12U*****
- PU(Y/Z)-A(24/30/36/42)NKA7 - Beginning with serial number 1ZU*****


© 2023 Mitsubishi Electric Trane HVAC US LLC. All rights reserved.

# SPECIFICATIONS: PCA-A30KA7 & PUY-A30NHA7

| | | | |
|---|---|---|---|
| Piping | Gas Pipe Size O.D. [Flared] | In.[mm] | 5/8 [15.88] |
| | Liquid Pipe Size O.D. [Flared] | In.[mm] | 3/8 [9.52] |
| | Maximum Piping Length | Ft. [m] | 225 [68] |
| | Maximum Height Difference | Ft. [m] | 100 [30] |
| | Maximum Number of Bends | | 15 |

NOTES:
AHRI Rated Conditions
(Rated data is determined at a fixed compressor speed) [1]Cooling (Indoor // Outdoor) °F 80 DB, 67 WB // 95 DB, 75 WB

*Indoor/Outdoor Unit Operating Temperature Range (Cooling Air Temp [Maximum / Minimum]):
- Wind baffles required to operate below 23°F DB in cooling mode.
- Cooling-only system with advanced wind baffle: -40°F - 115°F.
- Refer to wind baffle documentation for further information.

**Outdoor Unit Operating Temperature Range (Cooling Thermal Lock-out / Re-start Temperatures; Heating Thermal Lock-out / Re-start Temperatures):
- System cuts out in heating mode to avoid thermistor error and automatically restarts at these temperatures.

***Blue Fin Coating Standard from 2022 production:
- PU(Y/Z)-A(12/18)NKA7 - Beginning with serial number 12U*****
- PU(Y/Z)-A(24/30/36/42)NKA7 - Beginning with serial number 1ZU*****


© 2023 Mitsubishi Electric Trane HVAC US LLC. All rights reserved.

# INDOOR UNIT ACCESSORIES: PCA-A30KA7

| | | |
|---|---|---|
| Control Interface | BACnet® and Modbus® Interface | ☐ PAC-UKPRC001-CN-1 |
| | CN24 Relay Kit | ☐ CN24RELAY-KIT-CM3 |
| | IT Extender | ☐ PAC-WHS01IE-E |
| | kumo station® for kumo cloud® | ☐ TAC-WHS01HC-E |
| | Remote Operation Adapter‡ | ☐ PAC-SF40RM-E |
| | Thermostat Interface | ☐ PAC-US444CN-1 |
| | Thermostat Interface | ☐ PAC-US445CN-1 |
| | USNAP Adapter | ☐ PAC-WHS01UP-E |
| | Wireless Interface for kumo cloud® | ☐ PAC-USWHS002-WF-2 |
| Remote Sensor | Flush Mount Remote Temperature Sensor | ☐ PAC-USSEN002-FM-1 |
| | Flush Mount Temperature Sensor | ☐ PAC-USSEN001-FM-1 |
| | Remote Temperature Sensor | ☐ PAC-SE41TS-E |
| | Wireless temperature and humitity sensor for kumo cloud® | ☐ PAC-USWHS003-TH-1 |
| Wired Remote Controller | Deluxe Wired MA Remote Controller† | ☐ AAR-40MAAU |
| | Simple Ductless Wired Remote Controller | ☐ PAC-SDW01RC-1 |
| | Simple MA Remote Controller† | ☐ PAC-YT53CRAU-J |
| | Touch MA Controller† | ☐ PAR-CT01MAU-SB |
| Wireless Remote Controller | kumo touch™ RedLINK™ Wireless Controller | ☐ MHK2 |
| | Lockdown bracket for remote controller | ☐ RCMKP1CB |
| | Wireless MA Receiver | ☐ PAR-SR32MA-E |
| | Wireless MA Remote Controller | ☐ PAR-FL32MA-E |
| | Wireless Receiver Kit | ☐ PAR-SL93B-E |
| | Wireless Receiver Kit with i-See sensor™ | ☐ PAR-SA92MW-E |
| Condensate | Blue Diamond (Advanced) Mini Condensate Pump w/ Reservoir & Sensor (208/230V) [recommended] | ☐ X87-721 |
| | Blue Diamond (MegaBlue Advanced) Condensate Pump w/ Reservoir & Sensor | ☐ X87-835 |
| | Refco Condensate Pump (100-240 VAC) up to 120,000 BTU/H | ☐ COMBI |
| Disconnect Switch | (30A/600V/UL) [fits 2” X 4” utility box] - Black | ☐ TAZ-MS303 |
| Lineset | 10’ x 3/8” x 10’ x 5/8” Lineset (Twin-Tube Insulation) | ☐ MPLS385812T-10 |
| | 100’ x 3/8” x 100’ x 5/8” Lineset (Twin-Tube Insulation) | ☐ MPLS385812T-100 |
| | 15’ x 3/8” x 15’ x 5/8” Lineset (Twin-Tube Insulation) | ☐ MPLS385812T-15 |
| | 30’ x 3/8” x 30’ x 5/8” Lineset (Twin-Tube Insulation) | ☐ MPLS385812T-30 |
| | 50’ x 3/8” x 50’ x 5/8” Lineset (Twin-Tube Insulation) | ☐ MPLS385812T-50 |
| | 65’ x 3/8” x 65’ x 5/8” Lineset (Twin-Tube Insulation) | ☐ MPLS385812T-65 |

NOTES:
‡PAC-SF40RM-E (Unable to use with wireless remote controller)


© 2023 Mitsubishi Electric Trane HVAC US LLC. All rights reserved.

# OUTDOOR UNIT ACCESSORIES: PUY-A30NHA7

| | | |
|---|---|---|
| Air Outlet Guide | Air Outlet Guide (1 Piece) | ☐ PAC-SG59SG-E |
| Centralized Drain Pan | Centralized Drain Pan | ☐ PAC-SG63DP-E |
| | Drain Pan | ☐ PAC-SG64DP-E |
| Control/Service Tool | Control/Service Tool | ☐ PAC-SK52ST |
| | M- & P-Series Maintenance Tool Cable Set | ☐ M21EC0397 |
| | USB/UART Conversion Cable (Required for all laptop connection) | ☐ M21EC1397 |
| Hail Guards | Hail Guard | ☐ HG-A6 |
| M-NET Converter | M-NET Converter | ☐ PAC-SJ85MA-E |
| | M-NET Converter | ☐ PAC-SJ95MA-E |
| Mini-Split Wire | 14 Gauge, 4 wire MiniSplit Cable—250 ft. roll | ☐ S144-250 |
| | 14 Gauge, 4 wire MiniSplit Cable—50 ft. roll | ☐ S144-50 |
| | 16 Gauge, 4 wire MiniSplit Cable—250 ft. roll | ☐ S164-250 |
| | 16 Gauge, 4 wire MiniSplit Cable—50 ft. roll | ☐ S164-50 |
| Mounting Pad | Condensing Unit Mounting Pad: 24” x 42” x 3” | ☐ ULTRILITE2 |
| Stand | 18” Single Fan Stand | ☐ QSMS1801M |
| | 24” Single Fan Stand | ☐ QSMS2401M |
| | Condenser Wall Bracket | ☐ QSWB2000M-1 |
| | Condenser Wall Bracket - Stainless Steel Finish | ☐ QSWBSS |
| | Outdoor Unit Stand — 12” High | ☐ QSMS1201M |
| Wind Baffle | Front Wind Baffle | ☐ WB-PA5 |
| | Rear Wind Baffle | ☐ WB-RE5 |
| | Side Advanced Wind Baffle | ☐ WB-SD5 |


© 2023 Mitsubishi Electric Trane HVAC US LLC. All rights reserved.

# INDOOR UNIT DIMENSIONS: PCA-A30KA7

Unit: inch (mm)

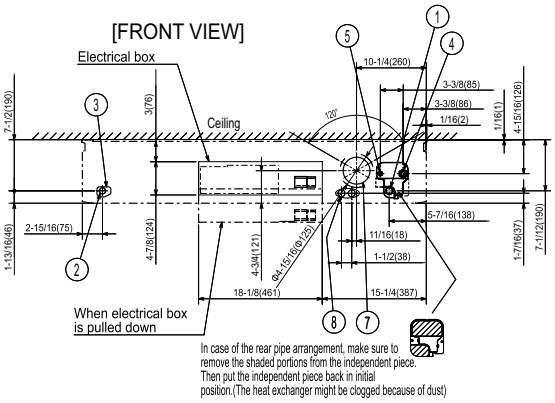


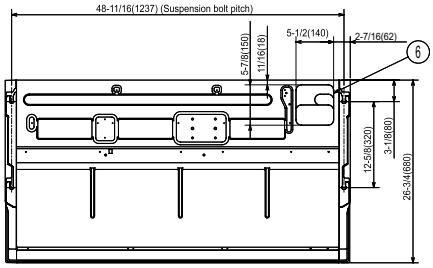


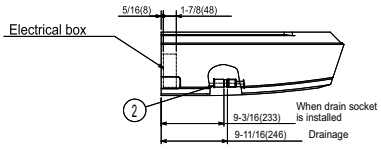


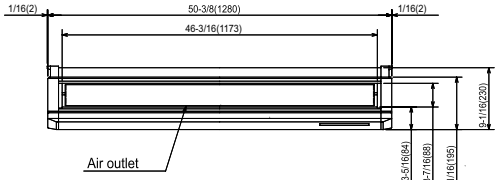


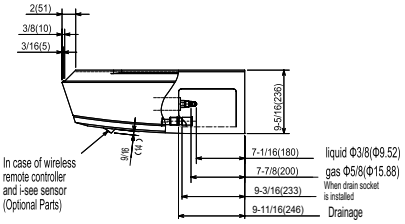


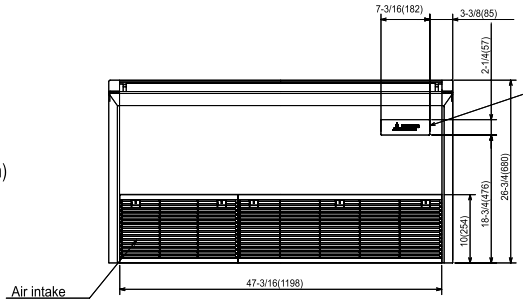


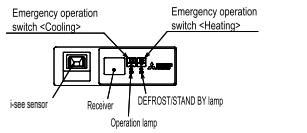


1. Drainage pipe connection(1(26mm)I.D.)
2. Drainage pipe connection(for the left arrangement)
3. Knockout hole for left drain-piping arrangement
4. Refrigerant-pipe connection(gas pipe side/flared connection)
5. Refrigerant-pipe connection(liquid pipe side/flared connection)
6. Knockout hole for upper drain pipe arrangement
7. Knockout hole for fresh air intake Φ3-15/16(Φ100)
8. Knockout hole for wiring arrangement Φ7/8(Φ22)

Accessory...Drain socket (1(26mm) I.D.)

NOTES.
1. Use M10 or W3/8 screw for anchor bolt.
2. Please be sure when installing the drain pump (option parts), refrigerant pipe will be only upward.


© 2023 Mitsubishi Electric Trane HVAC US LLC. All rights reserved.

# OUTDOOR UNIT DIMENSIONS: PUY-A30NHA7

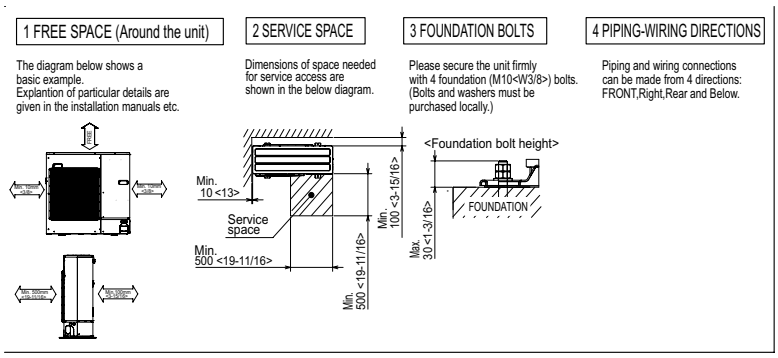


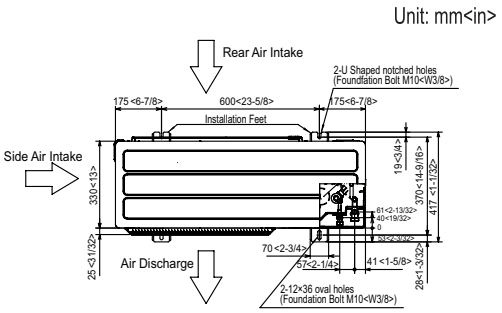


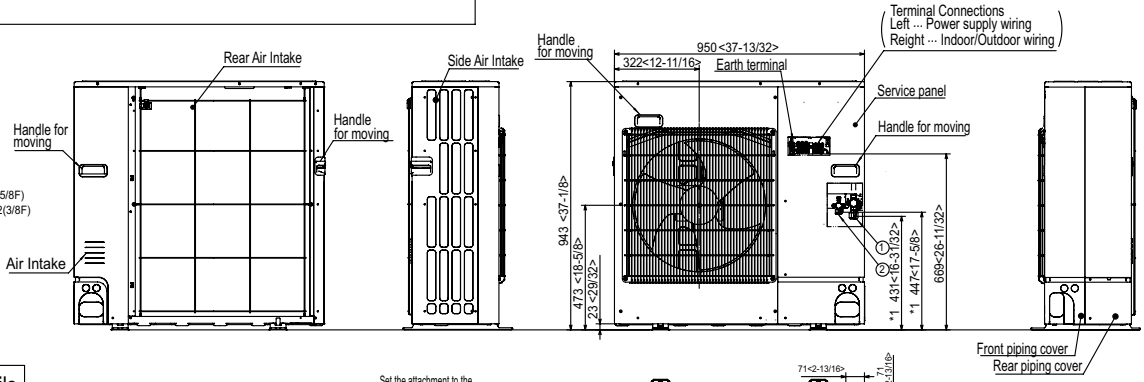


## Example of Notes

① ··· Refrigerant GAS pipe connection (FLARE) ø15.88(5/8F)
② ··· Refrigerant LIQUID pipe connection (FLARE) ø 9.52(3/8F)
*1··· Indication of STOP VALVE connection location.

## Piping knockout Hole Details

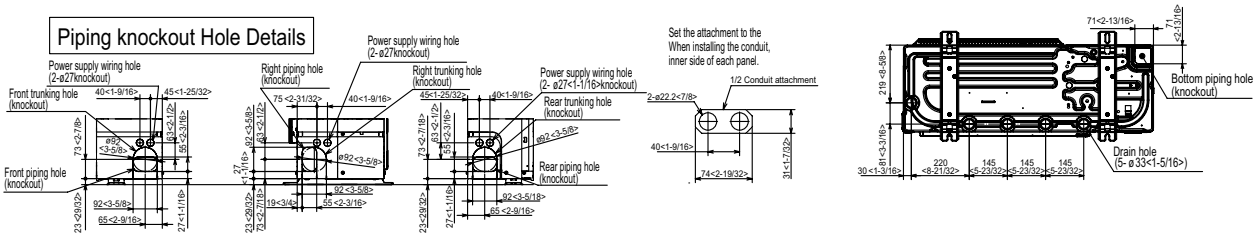


FORM# PCA-A30KA7 & PUY-A30NHA7 - 202304

Specifications are subject to change without notice.

© 2023 Mitsubishi Electric Trane HVAC US LLC. All rights reserved.