PAA-A24AA1 & PUZ-A24NHA7
intelli-HEAT™ CASED COIL, 14.5” WIDTH, 24,000 BTU/H 24,000 BTU/H HEAT PUMP UNIVERSAL OUTDOOR

American Standard HEATING & AIR CONDITIONING

MITSUBISHI ELECTRIC

Job Name:

System Reference: Date:

Indoor Unit PAA-A24AA1

Outdoor Unit PUZ-A24NHA7

INDOOR UNIT FEATURES

- Compatible with any thermostatically controlled (24VAC) natural gas or LP furnace*
- Intelligent Comfort Control Function (automatic switchover between heat pump and furnace*)
- Includes cased coil and control box
- Available in 14.5”, 17.5”, and 21” widths
- Optimized heat exchanger design for increased efficiency and longevity
- Flared piping connection
- High quality drain pan material with high heat tolerance and low moisture absorption
- Multi-position installation: horizontal (left or right), vertical (up or down)
  - Drain pans for all multi-position configurations are included for easy installation
- Optional humidifier control and ERV control
- Oxygen free copper coils
- Multiple control options available:
  - kumo cloud® smart device app for remote access
  - Third-party interface options
  - Wired or wireless controllers

*Mitsubishi Electric air conditioner and heat pump systems should only be connected with ANSI-Z21.47/CSA2.3 certified furnaces.

OUTDOOR UNIT FEATURES

- Variable speed INVERTER-driven compressor
- Pre-charged with refrigerant volume for piping length up to 70 ft
- Low ambient cooling down to 0°F providing 100% capacity
- 24-hour continuous operation (cooling mode)
- High pressure protection
- Fast restart
- Superior energy and operational efficiency
- Seacoast protection*
  - External Outer Panel: Phosphate coating + Acrylic-Enamel coating
  - Fan Motor Support: Epoxy resin coating (at edge face)
  - Separator Assembly Valve Bed: Epoxy resin coating (at edge face)
  - Blue Fin treatment is an anti-corrosion treatment that is applied to the Heat exchanger coil to protect it against airborne contaminants.
  - Heat exchanger coil and base panel rated for 2,000 hours in accordance with ASTM B117 testing

*Seacoast protection standard from 2022 production

© 2023 Mitsubishi Electric Trane HVAC US LLC. All rights reserved.

SPECIFICATIONS: PAA-A24AA1 & PUZ-A24NHA7

Cooling at 95°F[1]	Maximum Capacity	BTU/H	24,000
	Rated Capacity	BTU/H	24,000
	Minimum Capacity	BTU/H	10,600
	Maximum Power Input	W	1,920
	Rated Power Input	W	1,920
	Moisture Removal	Pints/h	5.0
	Sensible Heat Factor		0.77
	Power Factor [208V / 230V]	%	89.5 / 89.5
Heating at 47°F[2]	Maximum Capacity	BTU/H	31,000
	Rated Capacity	BTU/H	26,000
	Minimum Capacity	BTU/H	12,400
	Maximum Power Input	W	2,140
	Rated Power Input	W	2,140
	Power Factor [208V / 230V]	%	95.9 / 95.9
Heating at 17°F[3]	Maximum Capacity	BTU/H	15,400
	Rated Capacity	BTU/H	15,600
	Maximum Power Input	W	1,850
	Rated Power Input	W	1,850
Heating at 5°F[4]	Maximum Capacity	BTU/H	13,900
	Maximum Power Input	W	1,600
Heating at -4°F[5]	Maximum Capacity	BTU/H	11,600
Efficiency	SEER | SEER2		17.0 | 15.0
	EER[1] | EER2[1]		12.5 | 11.4
	HSPF [IV] | HSPF2 [IV]		9.5 | 8.5
	COP at 47°F[2]		3.55
	COP at 17°F at Maximum Capacity[3]		2.44
	COP at 5°F at Maximum Capacity[4]		2.55
	COP at -4°F at Maximum Capacity[5]		2.42
	ENERGY STAR® Certified		Yes
Electrical	Voltage, Phase, Frequency		208/230, 1, 60
	Guaranteed Voltage Range	V AC	198 - 253
	Voltage: Indoor - Outdoor, S1-S2	V AC	208/230
	Voltage: Indoor - Outdoor, S2-S3	V DC	24
	Short-circuit Current Rating [SCCR]	kA	5
	Recommended Fuse/Breaker Size [Oudoor]	A	25
	Recommended Wire Size [Indoor - Outdoor]	AWG	14
	Power Supply		Indoor unit is powered by the outdoor unit
Indoor Unit	MCA	A	0.2
	Rated Airflow, Dry	CFM	700
	Maximum Airflow, Dry	CFM	830
	Minimum Airflow, Dry	CFM	551
	Internal Static Pressure [at Rated CFM]	in. WG	0.18
	Drain Pipe Size	In. [mm]	3/4 [19.05]
	External Finish Color		Galvanized Steel
	Unit Dimensions	W x D x H: In. [mm]	14.5 x 21.7 x 27.4 [368.3 x 551.2 x 696.0]
	Package Dimensions	W x D x H: In. [mm]	22.5 x 28.8 x 31.1 [572 x 732 x 790]
	Unit Weight [Cased Coil Only]	Lbs. [kg]	48 [22.0]
	Control Box Weight	Lbs. [kg]	11.00 [4.99]
	Package Weight	Lbs. [kg]	80 [36.4]
Indoor Unit Operating Temperature Range	Cooling Intake Air Temp [Maximum / Minimum]	°F	90 DB, 73 WB / 66 DB, 59 WB
	Heating Intake Air Temp [Maximum / Minimum]	°F	82 DB / 50 DB

NOTES:

AHRI Rated Conditions
(Rated data is determined at a fixed compressor speed)

[1]Cooling (Indoor // Outdoor)	°F	80 DB, 67 WB // 95 DB, 75 WB
[2]Heating at 47°F (Indoor // Outdoor)	°F	70 DB, 60 WB // 47 DB, 43 WB
[3]Heating at 17°F (Indoor // Outdoor)	°F	70 DB, 60 WB // 17 DB, 15 WB

Airflow rate 350 CFM per rated ton of cooling at 95°F
Internal static pressure 0.3 in. WG (According to AHRI Standard - 210/240, where this is the maximum allowable internal static pressure for “Coil Only” systems)

Conditions

[4]Heating at 5°F (Indoor // Outdoor)	°F	70 DB, 60 WB // 5 DB, 4 WB
[5]Heating at -4°F (Indoor // Outdoor)	°F	70 DB, 60 WB // -4 DB, -5 WB

*Outdoor Unit Operating Temperature Range (Cooling Thermal Lock-out / Re-start Temperatures; Heating Thermal Lock-out / Re-start Temperatures):
- System cuts out in heating mode to avoid thermistor error and automatically restarts at these temperatures.

**Blue Fin Coating Standard from 2022 production:
- PU(Y/Z)-A(12/18)NKA7 - Beginning with serial number 12U*****
- PU(Y/Z)-A(24/30/36/42)NKA7 - Beginning with serial number 1ZU*****

© 2023 Mitsubishi Electric Trane HVAC US LLC. All rights reserved.

SPECIFICATIONS: PAA-A24AA1 & PUZ-A24NHA7

Outdoor Unit	MCA	A	19.0
	MOCP	A	26
	Fan Motor Full Load Amperage	A	0.4
	Fan Motor Output	W	86
	Airflow Rate [Cooling / Heating]	CFM	1,940 / 1,940
	Refrigerant Control		LEV
	Defrost Method		Reverse Cycle
	Coating on Heat Exchanger		Blue Fin Coating**
	Sound Pressure Level, Cooling[1]	dB(A)	47
	Sound Pressure Level, Heating[2]	dB(A)	48
	Compressor Type		INVERTER-driven twin rotary
	Compressor Model		SNB172FWHM1
	Compressor Rated Load Amps	A	7
	Compressor Locked Rotor Amps	A	11.0
	Compressor Oil [Type // Charge]	oz.	FV50S // 23
	External Finish Color		Ivory Munsell 3Y 7.8/1.1
	Base Pan Heater		N/A
	Unit Dimensions	W x D x H: In. [mm]	37-13/32 x 13 (+1-3/16) x 37-1/8 [950 x 330 (+30) x 943]
	Package Dimensions	W x D x H: In. [mm]	40-15/16 x 17-11/16 x 40-11/16 [1,040 x 450 x 1,033]
	Unit Weight	Lbs. [kg]	153 [69]
	Package Weight	Lbs. [kg]	179 [81]
Outdoor Unit Operating Temperature Range	Cooling Air Temp [Maximum / Minimum]	°F	115 DB / 23 DB
	Heating Air Temp [Maximum / Minimum]	°F	70 DB, 59 WB / -4 DB, -4 WB
	Heating Thermal Lock-out / Re-start Temperatures*	°F	-8 / -4
Refrigerant	Type		R410A
	Pre-Charged Refrigerant Amount	Lbs, oz	7.0, 11.0
	Maximum Pre-Charged Piping Length	Ft. [m]	70.0 [20.0]
	Additional Refrigerant Charge Per Additional Piping Length	oz./Ft. [g/m]	0.7 [50]
Piping	Gas Pipe Size O.D. [Flared]	In.[mm]	5/8 [15.88]
	Liquid Pipe Size O.D. [Flared]	In.[mm]	3/8 [9.52]
	Maximum Piping Length	Ft. [m]	100 [30]
	Maximum Height Difference	Ft. [m]	100 [30]
	Maximum Number of Bends		15

NOTES:

AHRI Rated Conditions	[1]Cooling (Indoor // Outdoor)	°F	80 DB, 67 WB // 95 DB, 75 WB
(Rated data is determined at a fixed compressor speed)	[2]Heating at 47°F (Indoor // Outdoor)	°F	70 DB, 60 WB // 47 DB, 43 WB
	[3]Heating at 17°F (Indoor // Outdoor)	°F	70 DB, 60 WB // 17 DB, 15 WB

Airflow rate 350 CFM per rated ton of cooling at 95°F
Internal static pressure 0.3 in. WG (According to AHRI Standard - 210/240, where this is the maximum allowable internal static pressure for “Coil Only” systems)

Conditions	[4]Heating at 5°F (Indoor // Outdoor)	°F	70 DB, 60 WB // 5 DB, 4 WB
	[5]Heating at -4°F (Indoor // Outdoor)	°F	70 DB, 60 WB // -4 DB, -5 WB

*Outdoor Unit Operating Temperature Range (Cooling Thermal Lock-out / Re-start Temperatures; Heating Thermal Lock-out / Re-start Temperatures):
- System cuts out in heating mode to avoid thermistor error and automatically restarts at these temperatures.

**Blue Fin Coating Standard from 2022 production:
- PU(Y/Z)-A(12/18)NKA7 - Beginning with serial number 12U*****
- PU(Y/Z)-A(24/30/36/42)NKA7 - Beginning with serial number 1ZU*****

© 2023 Mitsubishi Electric Trane HVAC US LLC. All rights reserved.

INDOOR UNIT ACCESSORIES: PAA-A24AA1

Control Interface	Connector and wire for Operation status/error using CN51	☐ PAC-725AD
	IT Extender	☐ PAC-WHS01IE-E
	kumo station® for kumo cloud®	☐ TAC-WHS01HC-E
	Procon BACnet® and Modbus® Interface	☐ PAC-UKPRC001-CN-1
	Remote Operation Adapter‡	☐ PAC-SF40RM-E
	Thermostat Interface	☐ PAC-US445CN-1
	USNAP Adapter	☐ PAC-WHS01UP-E
	Wireless Interface for kumo cloud®	☐ PAC-USWHS002-WF-2
Remote Sensor	Flush Mount Remote Temperature Sensor	☐ PAC-USSEN002-FM-1
	Flush Mount Temperature Sensor	☐ PAC-USSEN001-FM-1
	Remote Temperature Sensor	☐ PAC-SE41TS-E
	Wireless temperature and humidity sensor for kumo cloud®	☐ PAC-USWHS003-TH-1
Wired Remote Controller	Deluxe Wired MA Remote Controller†	☐ AAR-40MAAU
	Simple Ductless Wired Remote Controller	☐ PAC-SDW01RC-1
	Simple MA Remote Controller†	☐ PAC-YT53CRAU-J
	Touch MA Controller†	☐ PAR-CT01MAU-SB
Wireless Remote Controller	kumo touch™ RedLINK™ Wireless Controller	☐ MHK2
	Lockdown bracket for remote controller	☐ RCMKP1CB
	Wireless MA Receiver	☐ PAR-SR32MA-E
	Wireless MA Remote Controller	☐ PAR-FL32MA-E
Condensate	Refco Condensate Pump (100-240 VAC) up to 120,000 BTU/H	☐ COMBI
Lineset	10’ x 3/8” x 10’ x 5/8” Lineset (Twin-Tube Insulation)	☐ MPLS385812T-10
	100’ x 3/8” x 100’ x 5/8” Lineset (Twin-Tube Insulation)	☐ MPLS385812T-100
	15’ x 3/8” x 15’ x 5/8” Lineset (Twin-Tube Insulation)	☐ MPLS385812T-15
	30’ x 3/8” x 30’ x 5/8” Lineset (Twin-Tube Insulation)	☐ MPLS385812T-30
	50’ x 3/8” x 50’ x 5/8” Lineset (Twin-Tube Insulation)	☐ MPLS385812T-50
	65’ x 3/8” x 65’ x 5/8” Lineset (Twin-Tube Insulation)	☐ MPLS385812T-65

NOTES:
‡PAC-SF40RM-E (Unable to use with wireless remote controller)

© 2023 Mitsubishi Electric Trane HVAC US LLC. All rights reserved.

OUTDOOR UNIT ACCESSORIES: PUZ-A24NHA7

Air Outlet Guide	Air Outlet Guide (1 Piece)	☐ PAC-SG59SG-E
Centralized Drain Pan	Centralized Drain Pan	☐ PAC-SG63DP-E
	Drain Pan	☐ PAC-SG64DP-E
Control/Service Tool	Control/Service Tool	☐ PAC-SK52ST
	M- & P-Series Maintenance Tool Cable Set	☐ M21EC0397
	USB/UART Conversion Cable (Required for all laptop connection)	☐ M21EC1397
Hail Guards	Hail Guard	☐ HG-A6
M-NET Converter	M-NET Converter	☐ PAC-SJ85MA-E
	M-NET Converter	☐ PAC-SJ95MA-E
Mini-Split Wire	14 Gauge, 4 wire MiniSplit Cable—250 ft. roll	☐ S144-250
	14 Gauge, 4 wire MiniSplit Cable—50 ft. roll	☐ S144-50
	16 Gauge, 4 wire MiniSplit Cable—250 ft. roll	☐ S164-250
	16 Gauge, 4 wire MiniSplit Cable—50 ft. roll	☐ S164-50
Mounting Pad	Condensing Unit Mounting Pad: 24” x 42” x 3”	☐ ULTRILITE2
Stand	18” Single Fan Stand	☐ QSMS1801M
	24” Single Fan Stand	☐ QSMS2401M
	Condenser Wall Bracket	☐ QSWB2000M-1
	Condenser Wall Bracket - Stainless Steel Finish	☐ QSWBSS
	Outdoor Unit Stand — 12” High	☐ QSMS1201M
Wind Baffle	Front Wind Baffle	☐ WB-PA5
	Rear Wind Baffle	☐ WB-RE5
	Side Advanced Wind Baffle	☐ WB-SD5

© 2023 Mitsubishi Electric Trane HVAC US LLC. All rights reserved.

INDOOR UNIT DIMENSIONS: PAA-A24AA1

PAA-A18, 24, 30, 36, 42AA1/BA1/CA1

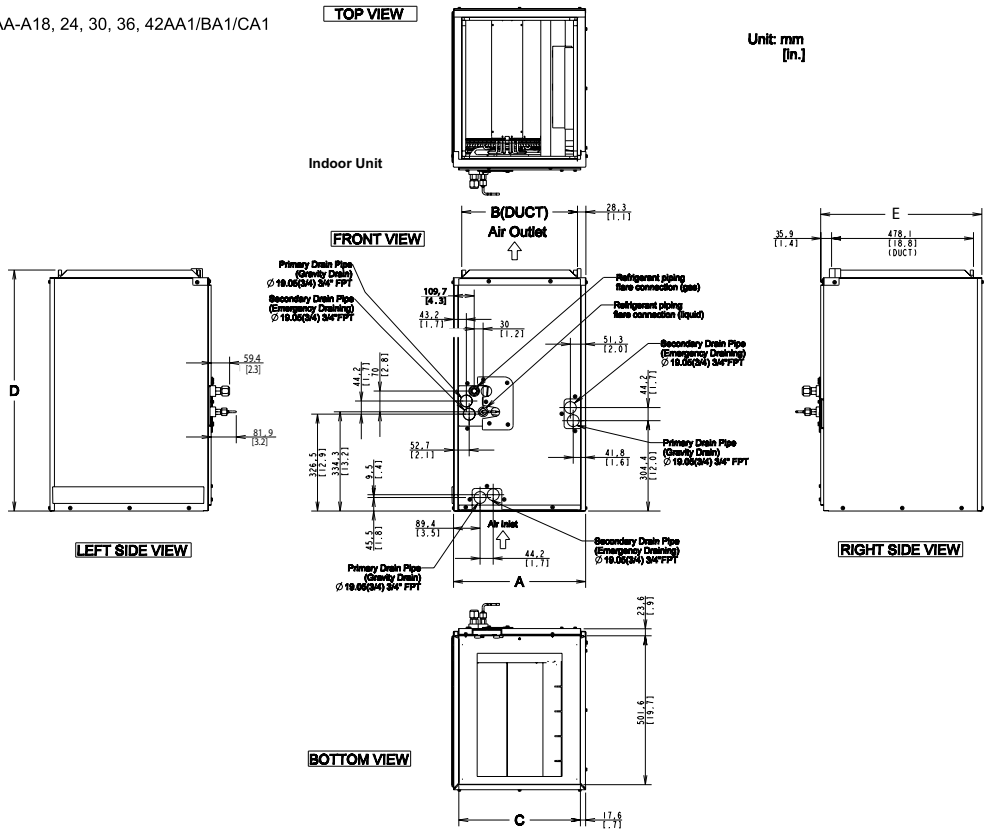

Control Box

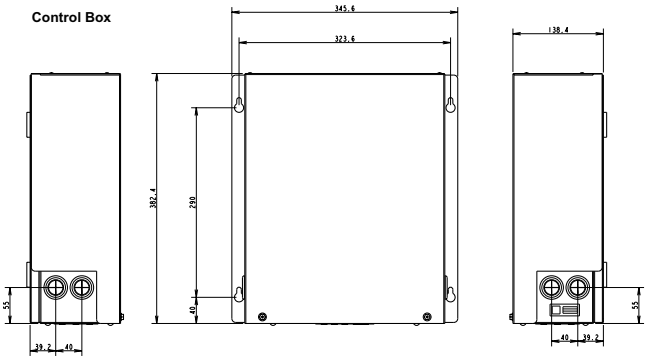

Model	A mm [in.]	B mm [in.]	C mm [in.]	D mm [in.]	E mm [in.]
PAA-A18AA1	368.3 [14-1/2]	313.1 [12-5/16]	332.7 [13-1/16]	670.2 [26-3/8]	543 [21-3/8]
PAA-A18BA1	445 [17-1/2]	390 [15-5/16]	409.6 [16-1/8]	670.2 [26-3/8]	543 [21-3/8]
PAA-A24AA1	368.3 [14-1/2]	313.1 [12-5/16]	332.7 [13-1/16]	670.2 [26-3/8]	543 [21-3/8]
PAA-A30AA1	368.3 [14-1/2]	313.1 [12-5/16]	332.7 [13-1/16]	670.2 [26-3/8]	543 [21-3/8]
PAA-A24BA1	445 [17-1/2]	390 [15-5/16]	409.6 [16-1/8]	670.2 [26-3/8]	543 [21-3/8]
PAA-A30BA1	445 [17-1/2]	390 [15-5/16]	409.6 [16-1/8]	670.2 [26-3/8]	543 [21-3/8]
PAA-A36BA1	445 [17-1/2]	390 [15-5/16]	409.6 [16-1/8]	785.2 [31]	543 [21-3/8]
PAA-A42BA1	445 [17-1/2]	390 [15-5/16]	409.6 [16-1/8]	785.2 [31]	543 [21-3/8]
PAA-A36CA1	534.6 [21]	479.4 [18-7/8]	499 [19-5/8]	785.2 [31]	543 [21-3/8]
PAA-A42CA1	534.6 [21]	479.4 [18-7/8]	499 [19-5/8]	785.2 [31]	543 [21-3/8]

© 2023 Mitsubishi Electric Trane HVAC US LLC. All rights reserved.

OUTDOOR UNIT DIMENSIONS: PUZ-A24NHA7

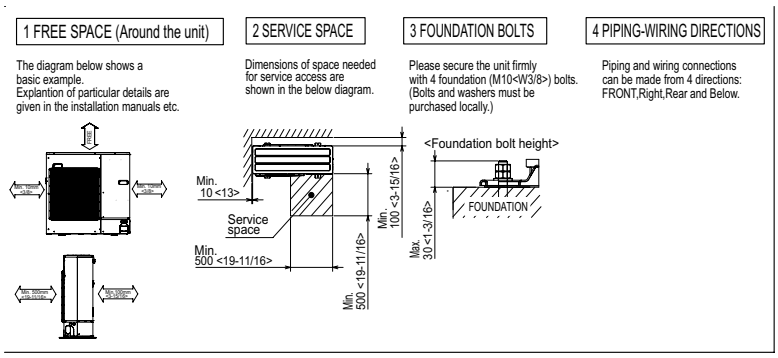

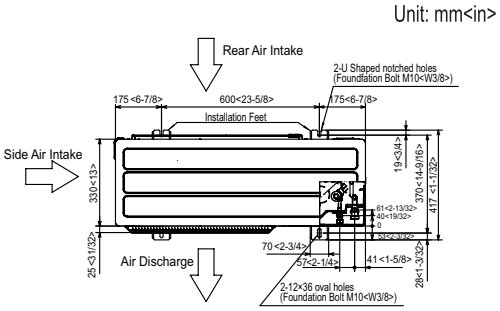

Example of Notes

① ··· Refrigerant GAS pipe connection (FLARE) ø15.88(5/8F)
② ··· Refrigerant LIQUID pipe connection (FLARE) ø 9.52(3/8F)
*1··· Indication of STOP VALVE connection location.

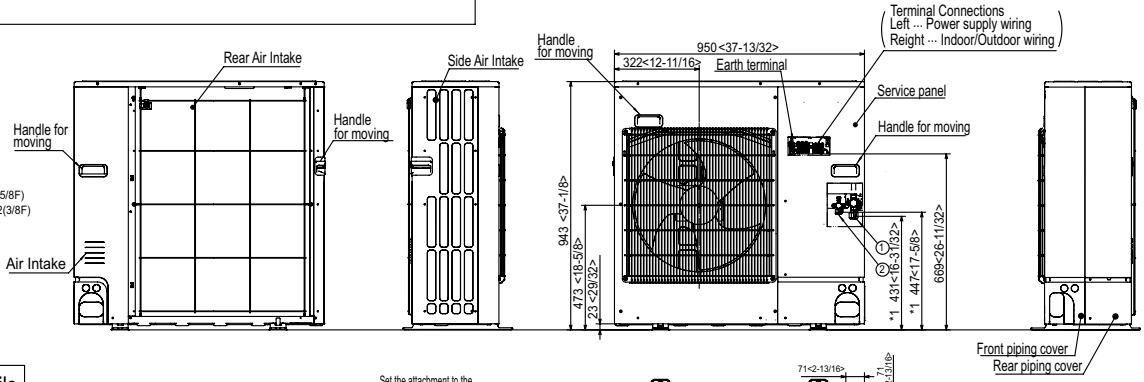

Piping knockout Hole Details

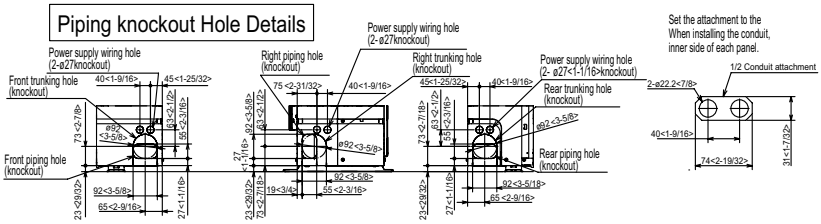

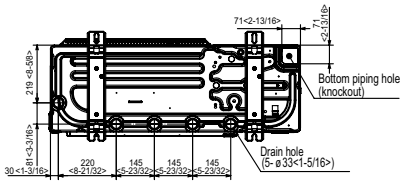

FORM# PAA-A24AA1 & PUZ-A24NHA7 - 202310

Specifications are subject to change without notice.

© 2023 Mitsubishi Electric Trane HVAC US LLC. All rights reserved.