# NTXUKS12A112BA & NAXSKS12A112AA
## 12,000 BTU/H EZ FIT CEILING CASSETTE
## 12,000 BTU/H HEAT PUMP UNIVERSAL OUTDOOR UNIT

American Standard HEATING & AIR CONDITIONING

MITSUBISHI ELECTRIC

Job Name:

System Reference: Date:

Indoor Unit ..... NTXUKS12A112BA

Outdoor Unit ..... NAXSKS12A112AA

INDOOR UNIT FEATURES
- Fits between 16” joists spacing
- Stylish, square design panel
- Built-in condensate lift mechanism (19.6”)
- Serviceable from the bottom (electrical and flare connections)
- Adjustable fan speeds and vane directions
- Washable antibacterial and deodorizing filter
- Multiple control options available:
  - Hand-held Remote Controller (provided with unit)
  - kumo cloud® smart device app for remote access
  - Third-party interface options
  - Wired or wireless controllers
- Pocket inside the access panel for kumo cloud® Wireless Interface

OUTDOOR UNIT FEATURES
- Variable speed INVERTER-driven compressor
- Innovative Joint Lap DC Motor leads to high efficiency and reliability
- Pulse Amplitude Modulation technology
- High-performance grooved piping for increased heat exchange efficiency

Specifications are subject to change without notice.

© 2023 Mitsubishi Electric Trane HVAC US LLC. All rights reserved.

# SPECIFICATIONS: NTXUKS12A112BA & NAXSKS12A112AA

| | | | |
|---|---|---|---|
| Cooling at 95°F[1] | Maximum Capacity | BTU/H | 12,000 |
| | Rated Capacity | BTU/H | 12,000 |
| | Minimum Capacity | BTU/H | 3,900 |
| | Maximum Power Input | W | 960 |
| | Rated Power Input | W | 960 |
| | Moisture Removal | Pints/h | 2.8 |
| | Sensible Heat Factor | | 0.74 |
| | Power Factor [208V / 230V] | % | 96.0 / 96.0 |
| Heating at 47°F[2] | Maximum Capacity | BTU/H | 17,000 |
| | Rated Capacity | BTU/H | 15,400 |
| | Minimum Capacity | BTU/H | 4,600 |
| | Maximum Power Input | W | 1,700 |
| | Rated Power Input | W | 1,300 |
| | Power Factor [208V / 230V] | % | 98.0 / 98.0 |
| Heating at 17°F[3] | Maximum Capacity | BTU/H | 10,900 |
| | Rated Capacity | BTU/H | 9,900 |
| | Maximum Power Input | W | 1,320 |
| | Rated Power Input | W | 1,020 |
| Heating at 5°F[4] | Maximum Capacity | BTU/H | 7,900 |
| | Maximum Power Input | W | 980 |
| Heating at -4°F[5] | Maximum Capacity | BTU/H | 5,900 |
| Efficiency | SEER \| SEER2 | | 19.8 \| 21.7 |
| | EER[1] \| EER2[1] | | 12.5 \| 12.2 |
| | HSPF [IV] \| HSPF2 [IV] | | 12.1 \| 10.9 |
| | COP at 47°F[2] | | 3.4 |
| | COP at 17°F at Maximum Capacity[3] | | 2.4 |
| | COP at 5°F at Maximum Capacity[4] | | 2.3 |
| | ENERGY STAR® Certified | | Yes |
| Electrical | Voltage, Phase, Frequency | | 208/230, 1, 60 |
| | Guaranteed Voltage Range | V AC | 187 - 253 |
| | Voltage: Indoor - Outdoor, S1-S2 | V AC | 208/230 |
| | Voltage: Indoor - Outdoor, S2-S3 | V DC | 24 |
| | Short-circuit Current Rating [SCCR] | kA | 5 |
| | Recommended Fuse/Breaker Size (Oudoor) | A | 15 |
| | Recommended Wire Size [Indoor - Outdoor] | AWG | 14 |
| | Power Supply | | Indoor unit is powered by the outdoor unit |
| Indoor Unit | MCA | A | 1.0 |
| | Fan Motor Full Load Amperage | A | 0.68 |
| | Fan Motor Type | | DC Motor |
| | Airflow Rate at Cooling, Dry | CFM | 212–258–297–332 |
| | Airflow Rate at Cooling, Wet | CFM | 180–219–252–282 |
| | Airflow Rate at Heating, Dry | CFM | 212–272–311–350 |
| | Sound Pressure Level [Cooling] | dB[A] | 27–32–36–40 |
| | Sound Pressure Level [Heating] | dB[A] | 26–32–36–40 |
| | Drain Pipe Size | In. [mm] | 1-1/4 [32] |
| | Condensate Lift Mechanism, Maximum Distance | In. [mm] | 19-11/16 [500] |
| | Coating on Heat Exchanger | | — |
| | External Finish Color | | Munsell 4.0GY 9.1/0.2 |
| | Unit Dimensions | W x D x H: In. [mm] | 43-3/8 x 14-3/16 x 7-5/16 [1,102 x 360 x 185] |
| | Package Dimensions | W x D x H: In. [mm] | 46-5/16 x 15-3/4 x 11-1/8 [1,177 x 400 x 284] |
| | Unit Weight | Lbs. [kg] | 34 [15.5] |
| | Package Weight | Lbs. [kg] | 41 [19.0] |
| Indoor Unit Operating Temperature Range | Cooling Intake Air Temp [Maximum / Minimum]* | °F | 90 DB, 73 WB / 67 DB, 57 WB |
| | Heating Intake Air Temp [Maximum / Minimum] | °F | 80 DB / 70 DB |

NOTES:

| | | | |
|---|---|---|---|
| AHRI Rated Conditions (Rated data is determined at a fixed compressor speed) | [1]Cooling (Indoor // Outdoor) | °F | 80 DB, 67 WB // 95 DB, 75 WB |
| | [2]Heating at 47°F (Indoor // Outdoor) | °F | 70 DB, 60 WB // 47 DB, 43 WB |
| | [3]Heating at 17°F (Indoor // Outdoor) | °F | 70 DB, 60 WB // 17 DB, 15 WB |
| Conditions | [4]Heating at 5°F (Indoor // Outdoor) | °F | 70 DB, 60 WB // 5 DB, 4 WB |
| | [5]Heating at -4°F (Indoor // Outdoor) | °F | 70 DB, 60 WB // -4 DB, -5 WB |

*Indoor/Outdoor Unit Operating Temperature Range (Cooling Air Temp [Maximum / Minimum]):
- Applications should be restricted to comfort cooling only; equipment cooling applications are not recommended for low ambient temperature conditions.

**Outdoor Unit Operating Temperature Range (Cooling Thermal Lock-out / Re-start Temperatures; Heating Thermal Lock-out / Re-start Temperatures):
- System cuts out in heating mode to avoid thermistor error and automatically restarts at these temperatures.


© 2023 Mitsubishi Electric Trane HVAC US LLC. All rights reserved.

# SPECIFICATIONS: NTXUKS12A112BA & NAXSKS12A112AA

| | | | |
|---|---|---|---|
| Outdoor Unit | MCA | A | 9.0 |
| | MOCP | A | 16 |
| | Fan Motor Full Load Amperage | A | 0.5 |
| | Fan Motor Output | W | 55 |
| | Airflow Rate [Cooling / Heating] | CFM | 1229 / 1172 |
| | Refrigerant Control | | LEV |
| | Defrost Method | | Reverse Cycle |
| | Coating on Heat Exchanger | | Blue Fin Coating |
| | Sound Pressure Level, Cooling[1] | dB(A) | 54 |
| | Sound Pressure Level, Heating[2] | dB(A) | 55 |
| | Compressor Type | | DC INVERTER-driven Twin Rotary |
| | Compressor Model | | SNB092FQAMT |
| | Compressor Rated Load Amps | A | 6.6 |
| | Compressor Locked Rotor Amps | A | 8.2 |
| | Compressor Oil [Type // Charge] | oz. | FV50S // 11.8 |
| | External Finish Color | | Ivory Munsell 3Y 7.8/1.1 |
| | Base Pan Heater | | Optional |
| | Unit Dimensions | W x D x H: In. [mm] | 31-1/2 x 11-1/4 x 21-5/8 [800 x 285 x 550] |
| | Package Dimensions | W x D x H: In. [mm] | 37 x 14-15/16 x 24-13/16 [940 x 380 x 630] |
| | Unit Weight | Lbs. [kg] | 81 [37] |
| | Package Weight | Lbs. [kg] | 88 [40] |
| Outdoor Unit Operating Temperature Range | Cooling Air Temp [Maximum / Minimum]* | °F | 115 DB / 14 DB |
| | Cooling Thermal Lock-out / Re-start Temperatures** | °F | -1 / 3 |
| | Heating Air Temp [Maximum / Minimum] | °F | 75 DB, 65 WB / -4 DB, -5 WB |
| | Heating Thermal Lock-out / Re-start Temperatures** | °F | -14 / -4 |
| Refrigerant | Type | | R410A |
| | Pre-Charged Refrigerant Amount | Lbs, oz | 2.0, 9.0 |
| | Maximum Pre-Charged Piping Length | Ft. [m] | 25.0 [7.5] |
| | Additional Refrigerant Charge Per Additional Piping Length | oz./Ft. [g/m] | 0.216 [20] |
| Piping | Gas Pipe Size O.D. [Flared] | In.[mm] | 3/8 [9.52] |
| | Liquid Pipe Size O.D. [Flared] | In.[mm] | 1/4 [6.35] |
| | Maximum Piping Length | Ft. [m] | 65 [20] |
| | Maximum Height Difference | Ft. [m] | 40 [12] |
| | Maximum Number of Bends | | 10 |

NOTES:

| | | | |
|---|---|---|---|
| AHRI Rated Conditions (Rated data is determined at a fixed compressor speed) | [1]Cooling (Indoor // Outdoor) | °F | 80 DB, 67 WB // 95 DB, 75 WB |
| | [2]Heating at 47°F (Indoor // Outdoor) | °F | 70 DB, 60 WB // 47 DB, 43 WB |
| | [3]Heating at 17°F (Indoor // Outdoor) | °F | 70 DB, 60 WB // 17 DB, 15 WB |
| Conditions | [4]Heating at 5°F (Indoor // Outdoor) | °F | 70 DB, 60 WB // 5 DB, 4 WB |
| | [5]Heating at -4°F (Indoor // Outdoor) | °F | 70 DB, 60 WB // -4 DB, -5 WB |

*Indoor/Outdoor Unit Operating Temperature Range (Cooling Air Temp [Maximum / Minimum]):
- Applications should be restricted to comfort cooling only; equipment cooling applications are not recommended for low ambient temperature conditions.

**Outdoor Unit Operating Temperature Range (Cooling Thermal Lock-out / Re-start Temperatures; Heating Thermal Lock-out / Re-start Temperatures):
- System cuts out in heating mode to avoid thermistor error and automatically restarts at these temperatures.

Specifications are subject to change without notice.

© 2023 Mitsubishi Electric Trane HVAC US LLC. All rights reserved.

# INDOOR UNIT ACCESSORIES: NTXUKS12A112BA

| | | |
|---|---|---|
| Control Interface | BACnet® and Modbus® Interface | ☐ PAC-UKPRC001-CN-1 |
| | CN24 Relay Kit | ☐ CN24RELAY-KIT-CM3 |
| | IT Extender | ☐ PAC-WHS01IE-E |
| | kumo station® for kumo cloud® | ☐ TAC-WHS01HC-E |
| | System Control Interface | ☐ MAC-334IF-E |
| | Thermostat Interface | ☐ PAC-US444CN-1 |
| | Thermostat Interface | ☐ PAC-US445CN-1 |
| | USNAP Adapter | ☐ PAC-WHS01UP-E |
| | Wireless Interface for kumo cloud® | ☐ PAC-USWHS002-WF-2 |
| Remote Sensor | Wired Remote Sensor | ☐ M21EAA307 |
| | Wireless temperature and humitity sensor for kumo cloud® | ☐ PAC-USWHS003-TH-1 |
| Wired Remote Controller | Deluxe Wired MA Remote Controller† | ☐ AAR-40MAAU |
| | Simple Ductless Wired Remote Controller | ☐ PAC-SDW01RC-1 |
| | Simple MA Remote Controller† | ☐ PAC-YT53CRAU-J |
| | Touch MA Controller† | ☐ PAR-CT01MAU-SB |
| Wireless Remote Controller | kumo touch™ RedLINK™ Wireless Controller | ☐ MHK2 |
| | Lockdown bracket for remote controller | ☐ RCMKP1CB |
| Condensate | Blue Diamond (Advanced) Mini Condensate Pump w/ Reservoir & Sensor (208/230V) [recommended] | ☐ X87-721 |
| | Blue Diamond (MicroBlue) Mini Condensate Pump (110/208/230V) up to 18,000 BTU/H | ☐ X86-003 |
| | Refco Condensate Pump (100-240 VAC) up to 120,000 BTU/H | ☐ COMBI |
| Disconnect Switch | (30A/600V/UL) [fits 2” X 4” utility box] - Black | ☐ TAZ-MS303 |
| | (30A/600V/UL) [fits 2” X 4” utility box] - White | ☐ TAZ-MS303W |
| Filter | Anti-allergy Enzyme Filter | ☐ MAC-408FT-E |
| Grille | Grille (required) | ☑ ALP-444W |
| Lineset | 15’ x 1/4” x 15’ / 3/8” Lineset (Twin-Tube Insulation) | ☐ MLS143812T-15 |
| | 30’ x 1/4” x 30’ / 3/8” Lineset (Twin-Tube Insulation) | ☐ MLS143812T-30 |
| | 50’ x 1/4” x 50’ / 3/8” Lineset (Twin-Tube Insulation) | ☐ MLS143812T-50 |
| | 65’ x 1/4” x 65’ / 3/8” Lineset (Twin-Tube Insulation) | ☐ MLS143812T-65 |

NOTES:
†Requires MAC-334IF-E
- Nv-Series EZ FIT® Recessed Ceiling Cassette, Floor-mount and Wall-mount
  Allows indoor units to connect to an MA Controller:
  Deluxe MA Remote Controller
  Simple MA Controller
  Touch MA Controller


© 2023 Mitsubishi Electric Trane HVAC US LLC. All rights reserved.

# OUTDOOR UNIT ACCESSORIES: NAXSKS12A112AA

| | | |
|---|---|---|
| Air Outlet Guide | Air Outlet Guide | ☐ MAC-889SG |
| Control/Service Tool | M- & P-Series Maintenance Tool Cable Set | ☐ M21EC0397 |
| | USB/UART Conversion Cable (Required for all laptop connection) | ☐ M21EC1397 |
| Hail Guards | Hail Guard | ☐ HG-B4 |
| Mini-Split Wire | 14 Gauge, 4 wire MiniSplit Cable—250 ft. roll | ☐ S144-250 |
| | 14 Gauge, 4 wire MiniSplit Cable—250 ft. roll | ☐ SW144-250 |
| | 14 Gauge, 4 wire MiniSplit Cable—50 ft. roll | ☐ S144-50 |
| | 14 Gauge, 4 wire MiniSplit Cable—50 ft. roll | ☐ SW144-50 |
| | 16 Gauge, 4 wire MiniSplit Cable—250 ft. roll | ☐ S164-250 |
| | 16 Gauge, 4 wire MiniSplit Cable—250 ft. roll | ☐ SW164-250 |
| | 16 Gauge, 4 wire MiniSplit Cable—50 ft. roll | ☐ S164-50 |
| | 16 Gauge, 4 wire MiniSplit Cable—50 ft. roll | ☐ SW164-50 |
| Mounting Pad | Condensing Unit Mounting Pad: 16” x 36” x 3” | ☐ ULTRILITE1 |
| | Outdoor Unit 3-1/4 inch Mounting Base (Pair) - Plastic | ☐ DSD-400P |
| Port Adaptor | Adaptor: 1/2” x 3/8” (required) | ☑ MAC-A455JP-E |
| Stand | 18” Single Fan Stand | ☐ QSMS1801M |
| | 24” Single Fan Stand | ☐ QSMS2401M |
| | Condenser Wall Bracket | ☐ QSWB2000M-1 |
| | Outdoor Unit Stand — 12” High | ☐ QSMS1201M |


© 2023 Mitsubishi Electric Trane HVAC US LLC. All rights reserved.

# INDOOR UNIT DIMENSIONS: NTXUKS12A112BA

**Unit: inch**

## INDOOR UNIT OUTLINE DRAWING

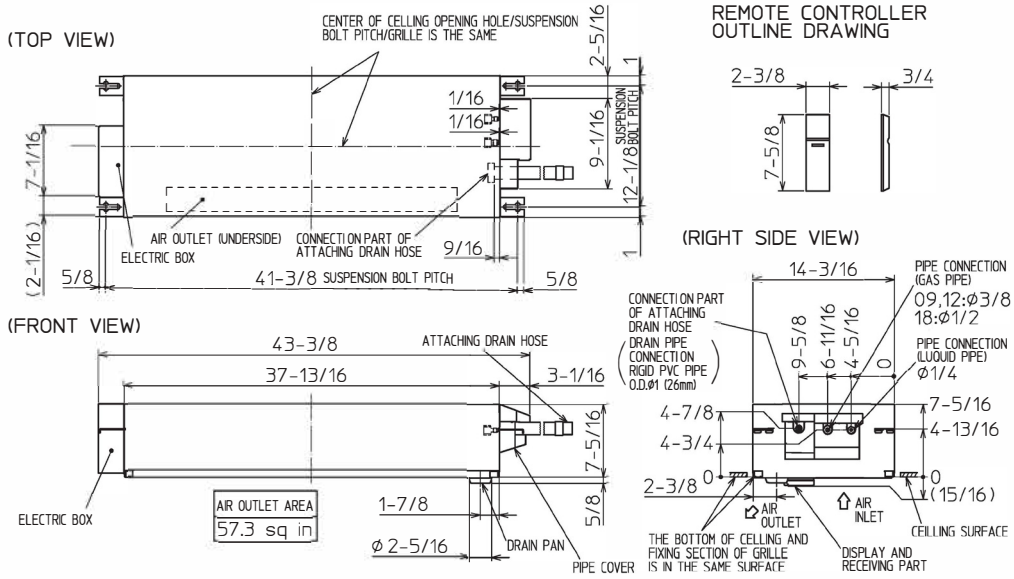


## REMOTE CONTROLLER OUTLINE DRAWING




## GRILLE OUTLINE DRAWING (TLP-444W)

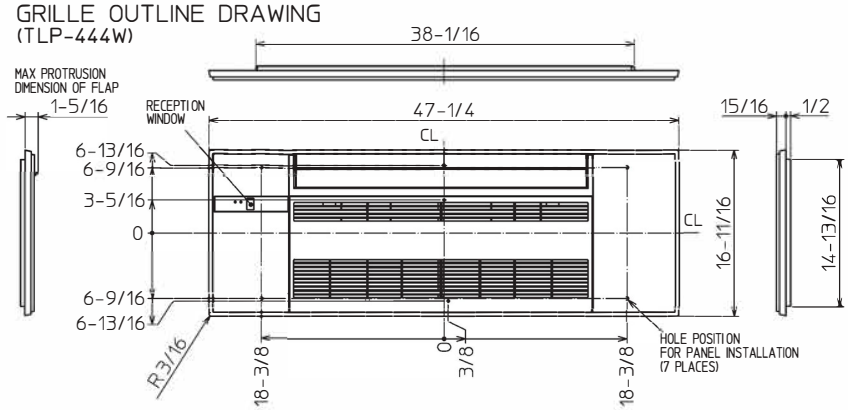


| | | 09A/12A | 18A |
|---|---|---|---|
| EXTENSION PIPE | LIQUID PIPE O.D. | Ø1/4 | |
| | GAS PIPE O.D. | Ø3/8 | Ø1/2 |
| CONNECTIONG OF PIPE | LIQUID PIPE | FLARED CONNECTION Ø1/4 | |
| | GAS PIPE | FLARED CONNECTION Ø3/8 | FLARED CONNECTION Ø1/2 |
| DRAIN HOSE | | HEAT INSULATER O.D. Ø1-1/4 / CONNECTION I.D. Ø1 / EFFECTIVE LENGTH 18-7/8 | |
| DRAIN PIPE CONNECTION | | RIGID PVC PIPE O.D. Ø1 (26mm) | |

NOTE1. CUT THE DRAIN HOSE (ACCESSORY) FOR USE, IF NECESSARY.

## INDOOR UNIT DETAIL VIEW

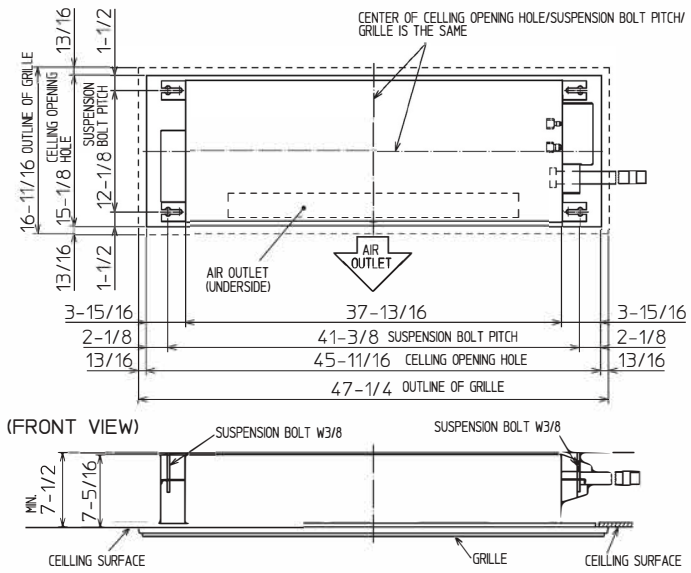


THE METHOD FOR STANDING DRAIN FROM INDOOR UNIT
※ CUT THE DRAIN HOSE (ACCESSORY) FOR USE, IF NECESSARY.

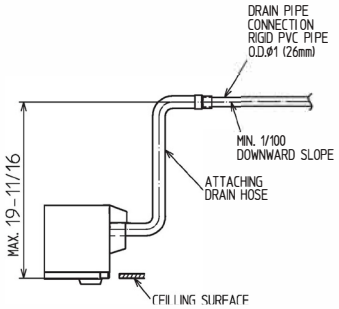



© 2023 Mitsubishi Electric Trane HVAC US LLC. All rights reserved.

# OUTDOOR UNIT DIMENSIONS: NAXSKS12A112AA

**Unit: inch(mm)**

## REQUIRED SPACE

*1 4 in. (100 mm) or more when front and sides of the unit are clear

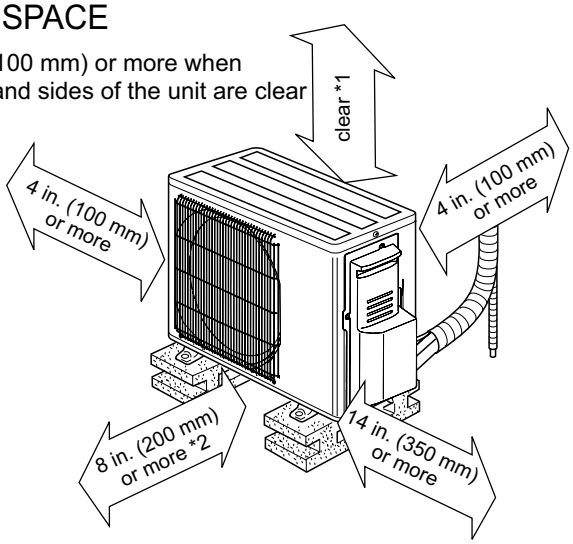


*2 When any 2 sides of left, right and rear of the unit are clear

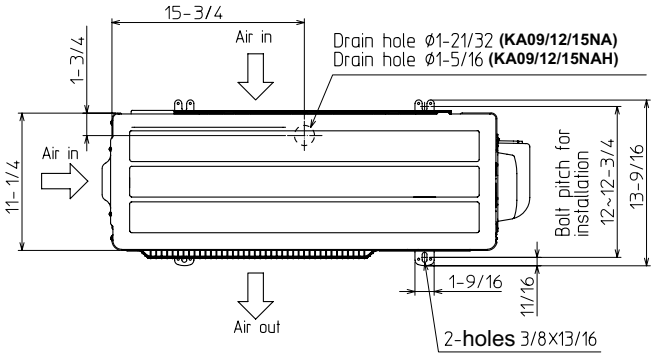


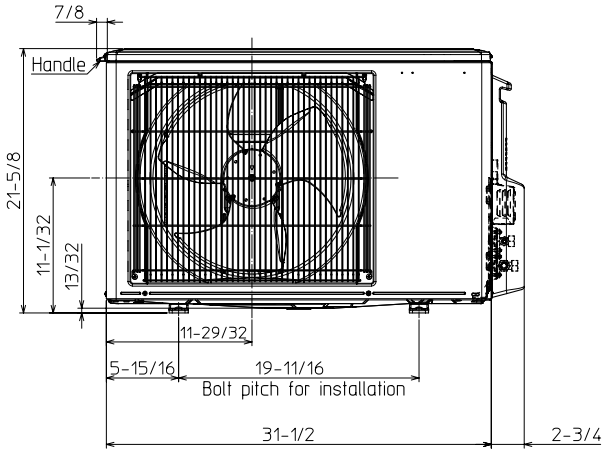


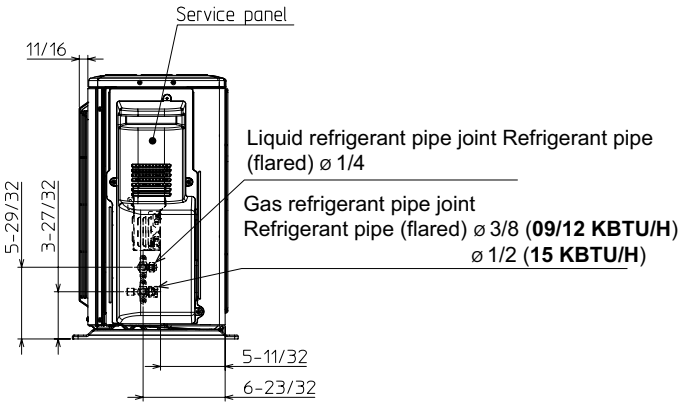


FORM# NTXUKS12A112BA & NAXSKS12A112AA - 202304

Specifications are subject to change without notice.

© 2023 Mitsubishi Electric Trane HVAC US LLC. All rights reserved.