# NAYWST09B112AA & NAYSST09B112AA
## 9,000 BTU/H WALL-MOUNTED INDOOR UNIT
## 9,000 BTU/H COOLING ONLY OUTDOOR UNIT

American Standard HEATING & AIR CONDITIONING

MITSUBISHI ELECTRIC

Job Name:

System Reference: Date:

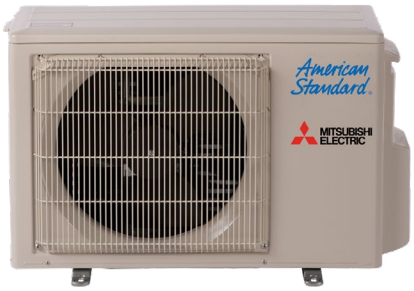


Indoor Unit ..... NAYWST09B112AA

Outdoor Unit ..... NAYSST09B112AA

INDOOR UNIT FEATURES

- Slim wall-mounted indoor units provide zone comfort control
- Dual Barrier Coating applied to the heat exchanger, vanes and fan to prevent hydrophilic and hydrophobic dirt build-up
- Optional Microparticle Filter designed to capture PM2.5
- The outdoor unit powers the indoor unit, and should a power outage occur, the system is automatically restarted when power returns
- Quiet operation
- Smart Set: recalls a preferred preset temperature setting at the touch of a button
- Multiple fan speed options: Quiet, Low, Medium, High, Super-high, Auto
- Multiple control options available:
  - Back-lit screen handheld remote controller (provided with the unit)
  - kumo cloud® smart device app for remote access
  - Third-party interface options
  - Wired or wireless controllers

OUTDOOR UNIT FEATURES

- INVERTER-driven compressor and LEV provide high efficiency and comfort while using only the energy needed to maintain maximum performance
- Blue Fin anti-corrosion treatment applied to the outdoor unit heat exchanger for increased coil protection and longer life
  - Rated for 2,000 hours spraying time per ASTM B117 Standard

Specifications are subject to change without notice.

© 2023 Mitsubishi Electric Trane HVAC US LLC. All rights reserved.

# SPECIFICATIONS: NAYWST09B112AA & NAYSST09B112AA

| | | | |
|---|---|---|---|
| Cooling at 95°F[1] | Maximum Capacity | BTU/H | 12,200 |
| | Rated Capacity | BTU/H | 9,000 |
| | Minimum Capacity | BTU/H | 3,600 |
| | Maximum Power Input | W | 1,050 |
| | Rated Power Input | W | 585 |
| | Moisture Removal | Pints/h | 0.8 |
| | Sensible Heat Factor | | 0.90 |
| | Power Factor [208V / 230V] | % | 90.0 / 90.0 |
| Efficiency | SEER \| SEER2 | | 27.0 \| 28.4 |
| | EER[1] \| EER2[1] | | 15.4 \| 15.4 |
| | ENERGY STAR® Certified | | Yes |
| Electrical | Voltage, Phase, Frequency | | 208/230, 1, 60 |
| | Guaranteed Voltage Range | V AC | 187 - 253 |
| | Voltage: Indoor - Outdoor, S1-S2 | V AC | 208/230 |
| | Voltage: Indoor - Outdoor, S2-S3 | V DC | 24 |
| | Short-circuit Current Rating [SCCR] | kA | 5 |
| | Recommended Fuse/Breaker Size (Oudoor) | A | 15 |
| | Recommended Wire Size [Indoor - Outdoor] | AWG | 14 |
| | Power Supply | | Indoor unit is powered by the outdoor unit |
| Indoor Unit | MCA | A | 1.0 |
| | Fan Motor Full Load Amperage | A | 0.5 |
| | Fan Motor Output | W | 30 |
| | Airflow Rate at Cooling, Dry | CFM | 134–160–222–307–381 |
| | Airflow Rate at Cooling, Wet | CFM | 121–144–200–276–343 |
| | Sound Pressure Level [Cooling] | dB[A] | 19–22–30–37–43 |
| | Drain Pipe Size | In. [mm] | 5/8 [15.88] |
| | Coating on Heat Exchanger | | Dual Barrier Coating |
| | External Finish Color | | Munsell 1.0Y 9.2/0.2 |
| | Unit Dimensions | W x D x H: In. [mm] | 31-7/16 x 9-1/8 x 11-5/8 [798 x 232 x 295] |
| | Package Dimensions | W x D x H: In. [mm] | 33-1/2 x 12 x 14 [850 x 300 x 350] |
| | Unit Weight | Lbs. [kg] | 23 [10.4] |
| | Package Weight | Lbs. [kg] | 26 [11.5] |
| Indoor Unit Operating Temperature Range | Cooling Intake Air Temp [Maximum / Minimum]* | °F | 90 DB, 73 WB / 67 DB, 57 WB |
| Outdoor Unit | MCA | A | 10.0 |
| | MOCP | A | 15 |
| | Fan Motor Full Load Amperage | A | 0.5 |
| | Fan Motor Output | W | 55 |
| | Refrigerant Control | | Linear expansion valve |
| | Defrost Method | | N/A |
| | Sound Pressure Level, Cooling[1] | dB(A) | 48 |
| | Compressor Type | | DC inverter driven Twin Rotary |
| | Compressor Model | | SNB092FQAMT |
| | Compressor Rated Load Amps | A | 6.72 |
| | Compressor Locked Rotor Amps | A | 8.4 |
| | Compressor Oil [Type // Charge] | oz. | FV50S //9.1 |
| | External Finish Color | | Munsell 3Y 7.8/1/1 |
| | Base Pan Heater | | N/A |
| | Unit Dimensions | W x D x H: In. [mm] | 31-1/2 x 11-1/4 x 21-5/8 [800 x 285 x 550] |
| | Package Dimensions | W x D x H: In. [mm] | 37 x 15 x 24-1/2 [980 x 380 x 630] |
| | Unit Weight | Lbs. [kg] | 79 [35.8] |
| | Package Weight | Lbs. [kg] | 87 [39.2] |
| Outdoor Unit Operating Temperature Range | Cooling Air Temp [Maximum / Minimum]* | °F | 115 DB / 14 DB |
| | Cooling Thermal Lock-out / Re-start Temperatures** | °F | -4 / 0 |
| Refrigerant | Type | | R410A |
| | Pre-Charged Refrigerant Amount | Lbs, oz | 2.0, 9.0 |
| | Maximum Pre-Charged Piping Length | Ft. [m] | 25.0 [7.5] |
| | Additional Refrigerant Charge Per Additional Piping Length | oz./Ft. [g/m] | 1.08 [20] |
| Piping | Gas Pipe Size O.D. [Flared] | In.[mm] | 3/8 [9.52] |
| | Liquid Pipe Size O.D. [Flared] | In.[mm] | 1/4 [6.35] |
| | Maximum Piping Length | Ft. [m] | 65 [20] |
| | Maximum Height Difference | Ft. [m] | 40 [12] |
| | Maximum Number of Bends | | 10 |

NOTES:
AHRI Rated Conditions
(Rated data is determined at a fixed compressor speed)

| | | |
|---|---|---|
| [1]Cooling (Indoor // Outdoor) | °F | 80 DB, 67 WB // 95 DB, 75 WB |
| [2]Heating at 47°F (Indoor // Outdoor) | °F | 70 DB, 60 WB // 47 DB, 43 WB |
| [3]Heating at 17°F (Indoor // Outdoor) | °F | 70 DB, 60 WB // 17 DB, 15 WB |

*Indoor/Outdoor Unit Operating Temperature Range (Cooling Air Temp [Maximum / Minimum]):
- Applications should be restricted to comfort cooling only; equipment cooling applications are not recommended for low ambient temperature conditions.

**Outdoor Unit Operating Temperature Range (Cooling Thermal Lock-out / Re-start Temperatures):
- System cuts out in heating mode to avoid thermistor error and automatically restarts at these temperatures.


© 2023 Mitsubishi Electric Trane HVAC US LLC. All rights reserved.

# INDOOR UNIT ACCESSORIES: NAYWST09B112AA

| | | |
|---|---|---|
| Control Interface | IT Extender | ☐ PAC-WHS01IE-E |
| | kumo station® for kumo cloud® | ☐ TAC-WHS01HC-E |
| | Procon BACnet® and Modbus® Interface | ☐ PAC-UKPRC001-CN-1 |
| | System Control Interface | ☐ MAC-334IF-E |
| | Thermostat Interface | ☐ PAC-US444CN-1 |
| | Thermostat Interface | ☐ PAC-US445CN-1 |
| | USNAP Adapter | ☐ PAC-WHS01UP-E |
| | Wireless Interface for kumo cloud® | ☐ PAC-USWHS002-WF-2 |
| Remote Sensor | Wired Remote Sensor | ☐ M21EAA307 |
| | Wireless temperature and humitity sensor for kumo cloud® | ☐ PAC-USWHS003-TH-1 |
| Wired Remote Controller | Deluxe Wired MA Remote Controller† | ☐ AAR-40MAAU |
| | Simple Ductless Wired Remote Controller | ☐ PAC-SDW01RC-1 |
| | Simple MA Remote Controller† | ☐ PAC-YT53CRAU-J |
| | Touch MA Controller† | ☐ PAR-CT01MAU-SB |
| Wireless Remote Controller | kumo touch™ RedLINK™ Wireless Controller | ☐ MHK2 |
| | Lockdown bracket for remote controller | ☐ RCMKP1CB |
| Condensate | Blue Diamond (Advanced) Mini Condensate Pump w/ Reservoir & Sensor (208/230V) [recommended] | ☐ X87-721 |
| | Blue Diamond (MegaBlue Advanced) Condensate Pump w/ Reservoir & Sensor | ☐ X87-835 |
| | Blue Diamond Alarm Extension Cable—6.5 Ft. | ☐ C13-192 |
| | Blue Diamond MultiTank — collection tank for use with multiple pumps | ☐ C21-014 |
| | Blue Diamond Sensor Extension Cable — 15 Ft. | ☐ C13-103 |
| | Drain Pan Level Sensor/Control | ☐ SS610E |
| | Fascia Kit for MicroBlue Pump, mounts the MicroBlue and sensor directly beneath indoor unit | ☐ T18-016 |
| | Refco Condensate Pump (100-240 VAC) | ☐ GOBI-II |
| | Refco Condensate Pump (100-240 VAC) up to 120,000 BTU/H | ☐ COMBI |
| | Sauermann Condensate Pump | ☐ SI30-230 |
| Disconnect Switch | (30A/600V/UL) [fits 2” X 4” utility box] - Black | ☐ TAZ-MS303 |
| | (30A/600V/UL) [fits 2” X 4” utility box] - White | ☐ TAZ-MS303W |
| Filter | Anti-allergy Enzyme Filter | ☐ MAC-408FT-E |
| | Microparticle (PM2.5) Filter | ☐ MAC-EMF515FT-E |

NOTES:
†Requires MAC-334IF-E
- Nv-Series EZ FIT® Recessed Ceiling Cassette, Floor-mount and Wall-mount
  Allows indoor units to connect to an MA Controller:
  Deluxe MA Remote Controller
  Simple MA Controller
  Touch MA Controller


© 2023 Mitsubishi Electric Trane HVAC US LLC. All rights reserved.

# OUTDOOR UNIT ACCESSORIES: NAYSST09B112AA

| | | |
|---|---|---|
| Hail Guards | Hail Guard | ☐ HG-B4 |
| Lineset | 15’ x 1/4” x 15’ / 3/8” Lineset (Twin-Tube Insulation) | ☐ MLS143812T-15 |
| | 30’ x 1/4” x 30’ / 3/8” Lineset (Twin-Tube Insulation) | ☐ MLS143812T-30 |
| | 50’ x 1/4” x 50’ / 3/8” Lineset (Twin-Tube Insulation) | ☐ MLS143812T-50 |
| | 65’ x 1/4” x 65’ / 3/8” Lineset (Twin-Tube Insulation) | ☐ MLS143812T-65 |
| Mounting Pad | Condensing Unit Mounting Pad: 16” x 36” x 3” | ☐ ULTRILITE1 |
| | Outdoor Unit 3-1/4 inch Mounting Base (Pair) - Plastic | ☐ DSD-400P |
| Stand | 18” Single Fan Stand | ☐ QSMS1801M |
| | 24” Single Fan Stand | ☐ QSMS2401M |
| | Condenser Wall Bracket | ☐ QSWB2000M-1 |
| | Condenser Wall Bracket - Stainless Steel Finish | ☐ QSWBSS |
| | Outdoor Unit Stand — 12” High | ☐ QSMS1201M |


© 2023 Mitsubishi Electric Trane HVAC US LLC. All rights reserved.

# INDOOR UNIT DIMENSIONS: NAYWST09B112AA

**Unit: inch**

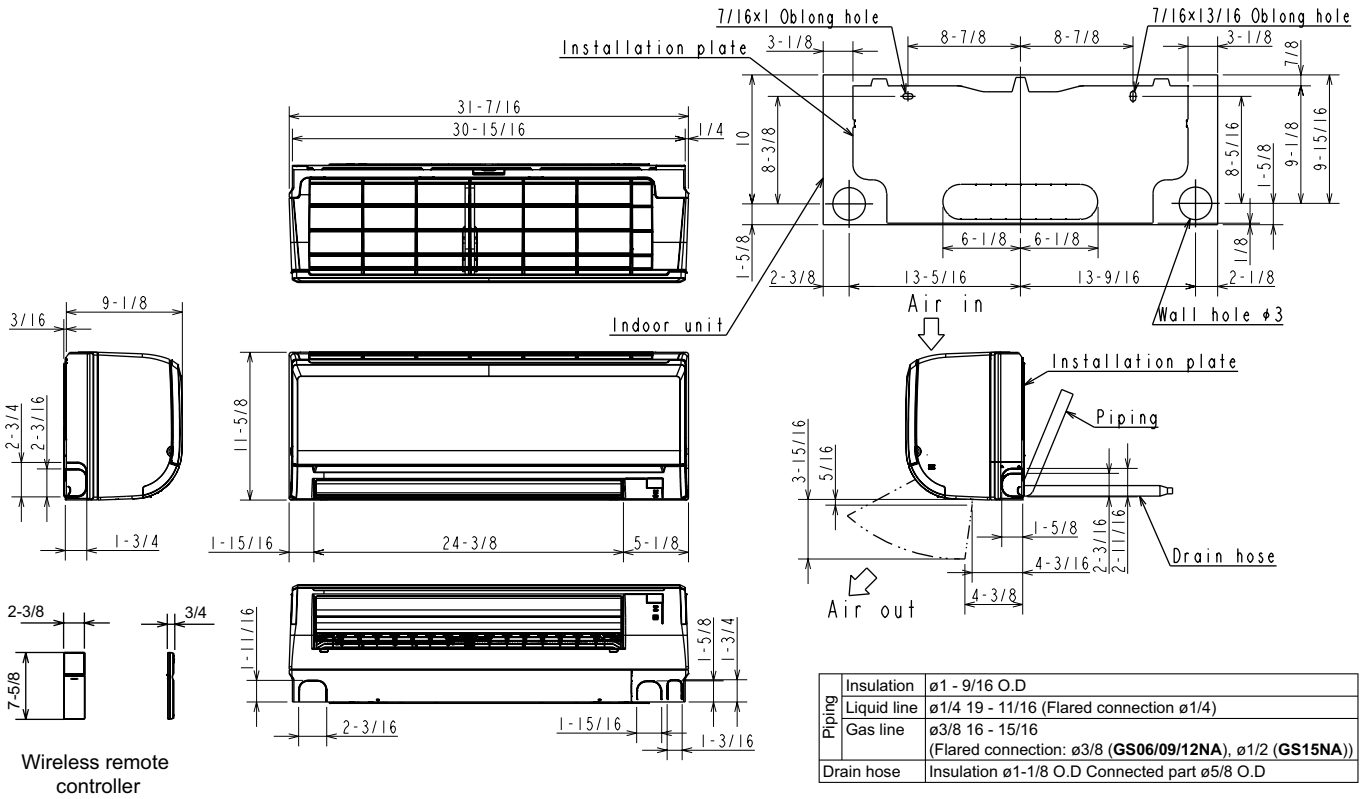


| | | |
|---|---|---|
| Piping | Insulation | ø1 - 9/16 O.D |
| | Liquid line | ø1/4 19 - 11/16 (Flared connection ø1/4) |
| | Gas line | ø3/8 16 - 15/16<br>(Flared connection: ø3/8 (**GS06/09/12NA**), ø1/2 (**GS15NA**)) |
| Drain hose | | Insulation ø1-1/8 O.D Connected part ø5/8 O.D |


© 2023 Mitsubishi Electric Trane HVAC US LLC. All rights reserved.

# OUTDOOR UNIT DIMENSIONS: NAYSST09B112AA

**Unit: inch**

## REQUIRED SPACE

*1 4 in. or more when front and sides of the unit are clear

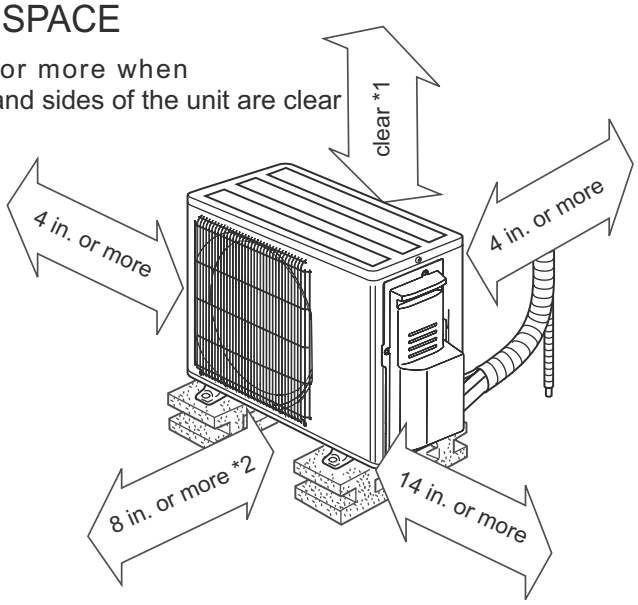


*2 When any 2 sides of left, right and rear of the unit are clear

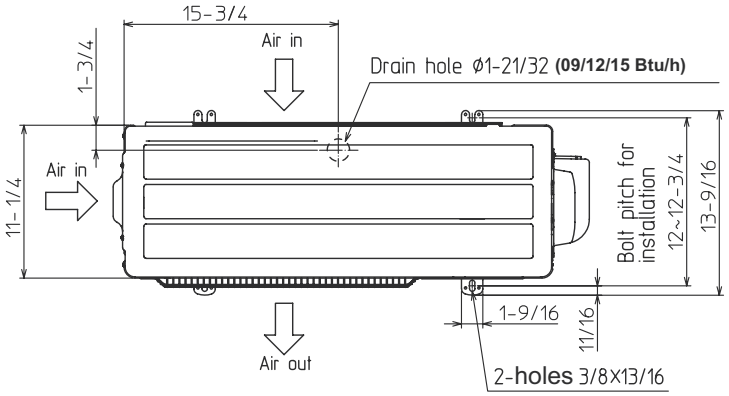


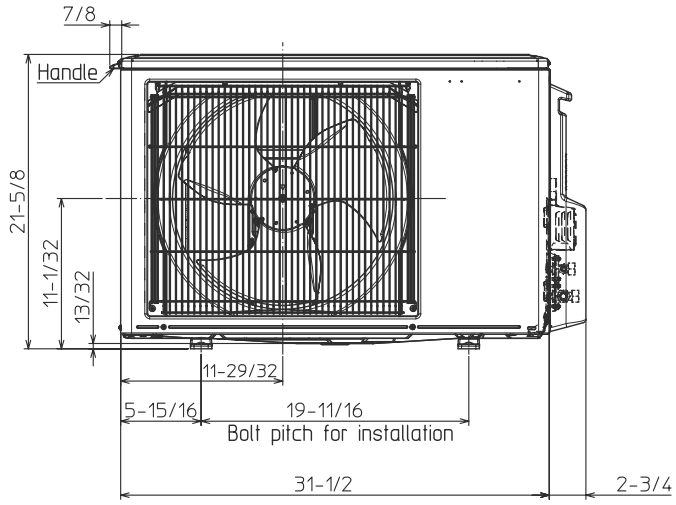


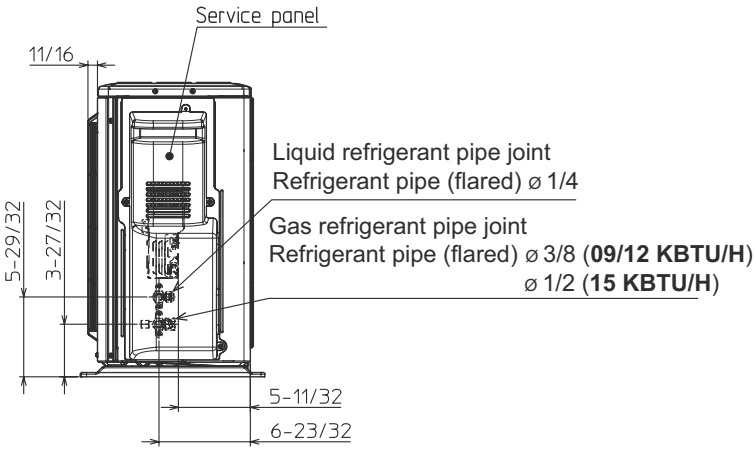


FORM# NAYWST09B112AA & NAYSST09B112AA - 202305

Specifications are subject to change without notice.

© 2023 Mitsubishi Electric Trane HVAC US LLC. All rights reserved.