NAXWST09B112AA & NAXSST09B112AA
9,000 BTU/H WALL-MOUNTED INDOOR UNIT
9,000 BTU/H HEAT PUMP OUTDOOR UNIT

American Standard HEATING & AIR CONDITIONING

MITSUBISHI ELECTRIC

Job Name:

System Reference: Date:

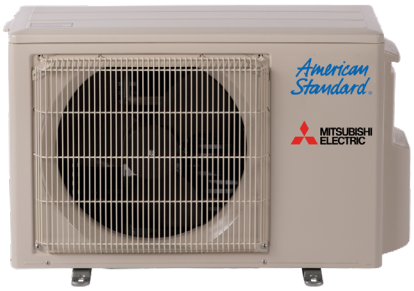

Indoor Unit NAXWST09B112AA

Outdoor Unit NAXSST09B112AA

INDOOR UNIT FEATURES

- Slim wall-mounted indoor units provide zone comfort control
- Dual Barrier Coating applied to the heat exchanger, vanes and fan to prevent hydrophilic and hydrophobic dirt build-up
- Optional Microparticle Filter designed to capture PM2.5
- The outdoor unit powers the indoor unit, and should a power outage occur, the system is automatically restarted when power returns
- Quiet operation
- Smart Set: recalls a preferred preset temperature setting at the touch of a button
- Built-in backup/auxiliary heater control available
- Multiple fan speed options: Quiet, Low, Medium, High, Super-high, Auto
- Multiple control options available:
  - Back-lit screen handheld remote controller (provided with the unit)
  - kumo cloud® smart device app for remote access
  - Third-party interface options
  - Wired or wireless controllers

OUTDOOR UNIT FEATURES

- INVERTER-driven compressor and LEV provide high efficiency and comfort while using only the energy needed to maintain maximum performance
- Blue Fin anti-corrosion treatment applied to the outdoor unit heat exchanger for increased coil protection and longer life
  - Rated for 2,000 hours spraying time per ASTM B117 Standard

Specifications are subject to change without notice.

© 2024 Mitsubishi Electric Trane HVAC US LLC. All rights reserved.

SPECIFICATIONS: NAXWST09B112AA & NAXSST09B112AA

Cooling at 95°F[1]	Maximum Capacity	BTU/H	12,200
	Rated Capacity	BTU/H	9,000
	Minimum Capacity	BTU/H	3,600
	Maximum Power Input	W	1,050
	Rated Power Input	W	585
	Moisture Removal	Pints/h	0.8
	Sensible Heat Factor		0.90
	Power Factor [208V / 230V]	%	90.0 / 90.0
Heating at 47°F[2]	Maximum Capacity	BTU/H	15,900
	Rated Capacity	BTU/H	10,900
	Minimum Capacity	BTU/H	4,500
	Maximum Power Input	W	1,740
	Rated Power Input	W	720
	Power Factor [208V / 230V]	%	92.0 / 92.0
Heating at 17°F[3]	Maximum Capacity	BTU/H	10,200
	Rated Capacity	BTU/H	6,500
	Maximum Power Input	W	1,230
	Rated Power Input	W	730
Heating at 5°F[4]	Maximum Capacity	BTU/H	7,900
	Maximum Power Input	W	1,090
Efficiency	SEER2		28.4
	EER2[1]		15.4
	HSPF2 [IV]		10.9
	COP at 47°F[2]		4.44
	COP at 17°F at Maximum Capacity[3]		2.43
	COP at 5°F at Maximum Capacity[4]		2.12
	ENERGY STAR® Certified		Yes
Electrical	Voltage, Phase, Frequency		208/230, 1, 60
	Guaranteed Voltage Range	V AC	187 - 253
	Voltage: Indoor - Outdoor, S1-S2	V AC	208/230
	Voltage: Indoor - Outdoor, S2-S3	V DC	24
	Short-circuit Current Rating [SCCR]	kA	5
	Recommended Fuse/Breaker Size (Outdoor)	A	15
	Recommended Wire Size [Indoor - Outdoor]	AWG	14
	Power Supply		Indoor unit is powered by the outdoor unit
Indoor Unit	MCA	A	1.0
	Fan Motor Full Load Amperage	A	0.75
	Fan Motor Output	W	30
	Airflow Rate at Cooling, Dry	CFM	134–160–222–307–381
	Airflow Rate at Cooling, Wet	CFM	121–144–200–276–343
	Airflow Rate at Heating, Dry	CFM	134–160–222–307–390
	Sound Pressure Level [Cooling]	dB[A]	19–22–30–37–43
	Sound Pressure Level [Heating]	dB[A]	19–22–30–37–43
	Drain Pipe Size	In. [mm]	5/8 [15.88]
	Coating on Heat Exchanger		Dual Barrier Coating
	External Finish Color		Munsell 1.0Y 9.2/0.2
	Unit Dimensions	W x D x H: In. [mm]	31-7/16 x 9-1/8 x 11-5/8 [798 x 232 x 295]
	Package Dimensions	W x D x H: In. [mm]	33-1/2 x 12 x 14 [850 x 300 x 350]
	Unit Weight	Lbs. [kg]	23 [10.4]
	Package Weight	Lbs. [kg]	26 [11.5]
Indoor Unit Operating Temperature Range	Cooling Intake Air Temp [Maximum / Minimum]*	°F	90 DB, 73 WB / 67 DB, 57 WB
	Heating Intake Air Temp [Maximum / Minimum]	°F	80 DB / 70 DB

NOTES:

AHRI Rated Conditions (Rated data is determined at a fixed compressor speed)	[1]Cooling (Indoor // Outdoor)	°F	80 DB, 67 WB // 95 DB, 75 WB
	[2]Heating at 47°F (Indoor // Outdoor)	°F	70 DB, 60 WB // 47 DB, 43 WB
	[3]Heating at 17°F (Indoor // Outdoor)	°F	70 DB, 60 WB // 17 DB, 15 WB
Conditions	[4]Heating at 5°F (Indoor // Outdoor)	°F	70 DB, 60 WB // 5 DB, 4 WB

*Indoor/Outdoor Unit Operating Temperature Range (Cooling Air Temp [Maximum / Minimum]):
- Applications should be restricted to comfort cooling only; equipment cooling applications are not recommended for low ambient temperature conditions.

**Outdoor Unit Operating Temperature Range (Cooling Thermal Lock-out / Re-start Temperatures; Heating Thermal Lock-out / Re-start Temperatures):
- System cuts out in heating mode to avoid thermistor error and automatically restarts at these temperatures.

Specifications are subject to change without notice.

© 2024 Mitsubishi Electric Trane HVAC US LLC. All rights reserved.

SPECIFICATIONS: NAXWST09B112AA & NAXSST09B112AA

Outdoor Unit	MCA	A	10.0
	MOCP	A	15
	Fan Motor Full Load Amperage	A	0.5
	Fan Motor Output	W	55
	Refrigerant Control		Linear expansion valve
	Defrost Method		N/A
	Sound Pressure Level, Cooling[1]	dB(A)	48
	Sound Pressure Level, Heating[2]	dB(A)	50
	Compressor Type		DC inverter driven Twin Rotary
	Compressor Model		SNB092FQAMT
	Compressor Rated Load Amps	A	6.72
	Compressor Locked Rotor Amps	A	8.4
	External Finish Color		Munsell 3Y 7.8/1/1
	Base Pan Heater		Optional
	Unit Dimensions	W x D x H: In. [mm]	31-1/2 x 11-1/4 x 21-5/8 [800 x 285 x 550]
	Package Dimensions	W x D x H: In. [mm]	37 x 15 x 24-1/2 [980 x 380 x 630]
	Unit Weight	Lbs. [kg]	79 [35.8]
	Package Weight	Lbs. [kg]	87 [39.2]
Outdoor Unit Operating Temperature Range	Cooling Air Temp [Maximum / Minimum]*	°F	115 DB / 14 DB
	Cooling Thermal Lock-out / Re-start Temperatures**	°F	-4 / 0
	Heating Air Temp [Maximum / Minimum]	°F	75 DB, 65 WB / -4 DB, -5 WB
	Heating Thermal Lock-out / Re-start Temperatures**	°F	-14 / -4
Refrigerant	Type		R410A
	Pre-Charged Refrigerant Amount	Lbs, oz	2.0, 9.0
	Maximum Pre-Charged Piping Length	Ft. [m]	25.0 [7.5]
	Additional Refrigerant Charge Per Additional Piping Length	oz./Ft. [g/m]	1.08 [20]
Piping	Gas Pipe Size O.D. [Flared]	In.[mm]	3/8 [9.52]
	Liquid Pipe Size O.D. [Flared]	In.[mm]	1/4 [6.35]
	Maximum Piping Length	Ft. [m]	65 [20]
	Maximum Height Difference	Ft. [m]	40 [12]
	Maximum Number of Bends		10

NOTES:

AHRI Rated Conditions (Rated data is determined at a fixed compressor speed)	[1]Cooling (Indoor // Outdoor)	°F	80 DB, 67 WB // 95 DB, 75 WB
	[2]Heating at 47°F (Indoor // Outdoor)	°F	70 DB, 60 WB // 47 DB, 43 WB
	[3]Heating at 17°F (Indoor // Outdoor)	°F	70 DB, 60 WB // 17 DB, 15 WB
Conditions	[4]Heating at 5°F (Indoor // Outdoor)	°F	70 DB, 60 WB // 5 DB, 4 WB

*Indoor/Outdoor Unit Operating Temperature Range (Cooling Air Temp [Maximum / Minimum]):
- Applications should be restricted to comfort cooling only; equipment cooling applications are not recommended for low ambient temperature conditions.

**Outdoor Unit Operating Temperature Range (Cooling Thermal Lock-out / Re-start Temperatures; Heating Thermal Lock-out / Re-start Temperatures):
- System cuts out in heating mode to avoid thermistor error and automatically restarts at these temperatures.

© 2024 Mitsubishi Electric Trane HVAC US LLC. All rights reserved.

INDOOR UNIT ACCESSORIES: NAXWST09B112AA

Control Interface	Backup Heat Relay Kit Adapter for CN24 or CN152 on ducted models	☐ CN24RELAY-KIT-CM3
	IT Extender for kumo station™	☐ PAC-WHS01IE-E
	kumo station™ for kumo cloud®	☐ TAC-WHS01HC-E
	M-Net & I/O Control Interface for M-Series	☐ MAC-334IF-E
	Procon BACnet® and Modbus® Interface	☐ PAC-UKPRC001-CN-1
	Thermostat Interface for 3rd Party Thermostats	☐ PAC-US445CN-1
	USNAP Adapter for Demand Response	☐ PAC-WHS01UP-E
	Wireless Interface for kumo cloud®	☐ PAC-USWHS002-WF-2
Remote Sensor	Remote Temperature Sensor for MFZ, MLZ, and MSZ models	☐ M21EAA307
	Wireless temperature and humidity sensor for kumo cloud®	☐ PAC-USWHS003-TH-1
Wired Remote Controller	Deluxe MA Wired Remote Controller†	☐ AAR-41MAAU
	Simple Ductless Wired Remote Controller	☐ PAC-SDW01RC-1
	Simple MA Remote Controller	☐ PAC-YT53CRAU-J
	Touch MA Wired Remote Controller	☐ PAR-CT01MAU-SB
Wireless Remote Controller	kumo touch™ RedLINK™ Wireless Controller & Receiver kit	☐ MHK2
	Lockdown Bracket for Wireless Handheld Remote Controllers	☐ RCMKP1CB
Condensate	Blue Diamond (Advanced) Mini Condensate Pump w/ Reservoir & Sensor (208/230V) [recommended]	☐ X87-721
	Blue Diamond (MaxiBlue Advanced) Mini Condensate Pump w/ Reservoir & Sensor (110V) up to 48,000 BTU/H [recommended]	☐ X87-711
	Blue Diamond (MegaBlue Advanced) Condensate Pump w/ Reservoir & Sensor	☐ X87-835
	Blue Diamond Alarm Extension Cable—6.5 Ft.	☐ C13-192
	Blue Diamond MultiTank — collection tank for use with multiple pumps	☐ C21-014
	Blue Diamond Sensor Extension Cable — 15 Ft.	☐ C13-103
	Drain Pan Level Sensor/Control	☐ SS610E
	Fascia Kit for MicroBlue Pump, mounts the MicroBlue and sensor directly beneath indoor unit	☐ T18-016
	Refco Condensate Pump (100-240 VAC)	☐ GOBI-II
	Refco Condensate Pump (100-240 VAC) up to 120,000 BTU/H	☐ COMBI
	Sauermann Condensate Pump	☐ SI30-230
Disconnect Switch	(30A/600V/UL) [fits 2” X 4” utility box] - Black	☐ TAZ-MS303
	(30A/600V/UL) [fits 2” X 4” utility box] - White	☐ TAZ-MS303W
Drain Hose	Flexible Mini-Split Drain Hose	☐ DRX-16
Filter	Anti-allergy Enzyme Filter	☐ MAC-408FT-E

NOTES:
†Requires MAC-334IF-E
- Nv-Series EZ FIT® Recessed Ceiling Cassette, Floor-mount and Wall-mount
  Allows indoor units to connect to an MA Controller:
  Deluxe MA Remote Controller
  Simple MA Controller
  Touch MA Controller

© 2024 Mitsubishi Electric Trane HVAC US LLC. All rights reserved.

OUTDOOR UNIT ACCESSORIES: NAXSST09B112AA

Hail Guards	Hail Guard	☐ HG-B4
Lineset	15’ x 1/4” x 15’ / 3/8” Lineset (Twin-Tube Insulation)	☐ MLS143812T-15
	30’ x 1/4” x 30’ / 3/8” Lineset (Twin-Tube Insulation)	☐ MLS143812T-30
	50’ x 1/4” x 50’ / 3/8” Lineset (Twin-Tube Insulation)	☐ MLS143812T-50
	65’ x 1/4” x 65’ / 3/8” Lineset (Twin-Tube Insulation)	☐ MLS143812T-65
Mounting Pad	Condensing Unit Mounting Pad: 16” x 36” x 3”	☐ ULTRILITE1
Optional Defrost Heater	Optional Defrost Heater	☐ MAC-640BH-U
Stand	18” Single Fan Stand	☐ QSMS1801M
	24” Single Fan Stand	☐ QSMS2401M
	Condenser Wall Bracket	☐ QSWB2000M-1
	Condenser Wall Bracket - Stainless Steel Finish	☐ QSWBSS
	Outdoor Unit 3-1/4 inch Mounting Base (Pair) - Plastic	☐ DSD-400P
	Outdoor Unit Stand — 12” High	☐ QSMS1201M

© 2024 Mitsubishi Electric Trane HVAC US LLC. All rights reserved.

INDOOR UNIT DIMENSIONS: NAXWST09B112AA

Unit: inch

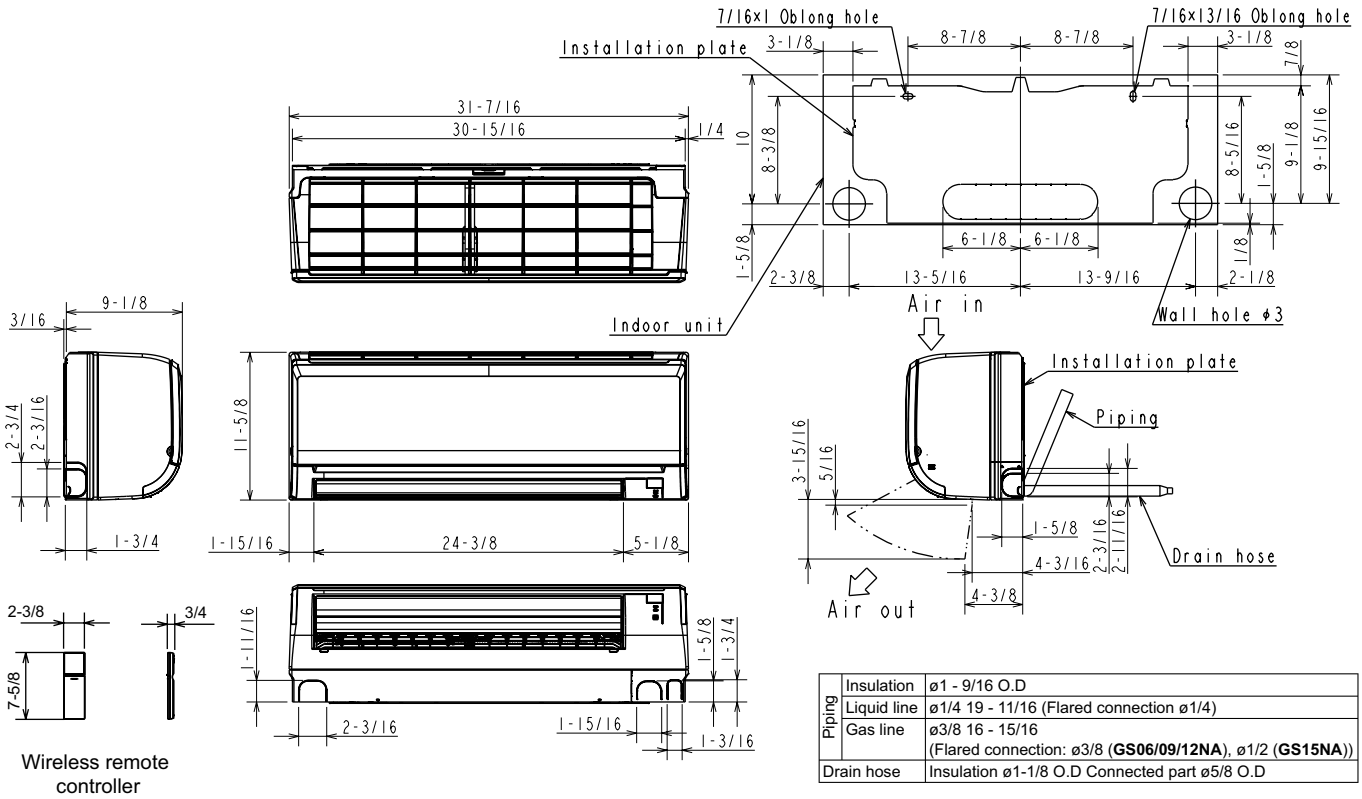

Piping	Insulation	ø1 - 9/16 O.D
	Liquid line	ø1/4 19 - 11/16 (Flared connection ø1/4)
	Gas line	ø3/8 16 - 15/16 (Flared connection: ø3/8 (**GS06/09/12NA**), ø1/2 (**GS15NA**))
Drain hose		Insulation ø1-1/8 O.D Connected part ø5/8 O.D

© 2024 Mitsubishi Electric Trane HVAC US LLC. All rights reserved.

OUTDOOR UNIT DIMENSIONS: NAXSST09B112AA

Unit: inch

REQUIRED SPACE

*1 4 in. or more when
front and sides of the unit are clear

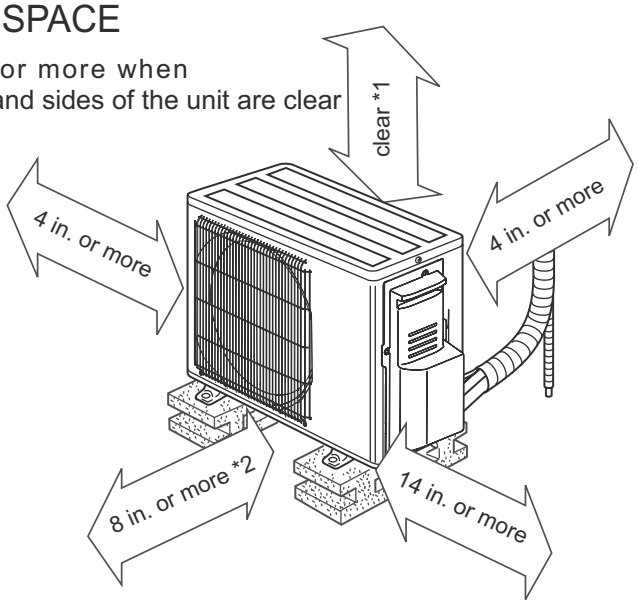

*2 When any 2 sides of left, right
and rear of the unit are clear

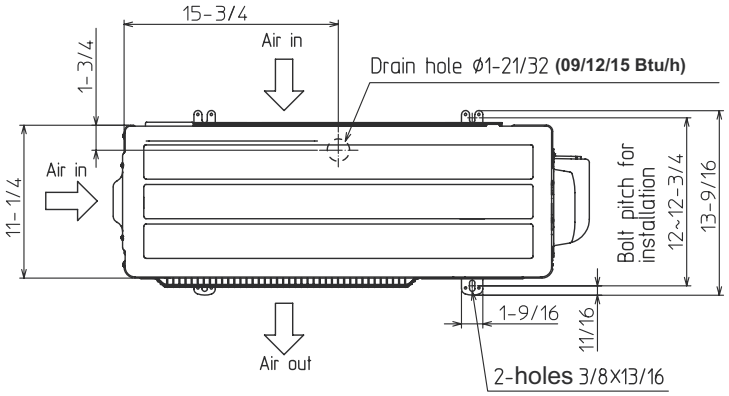

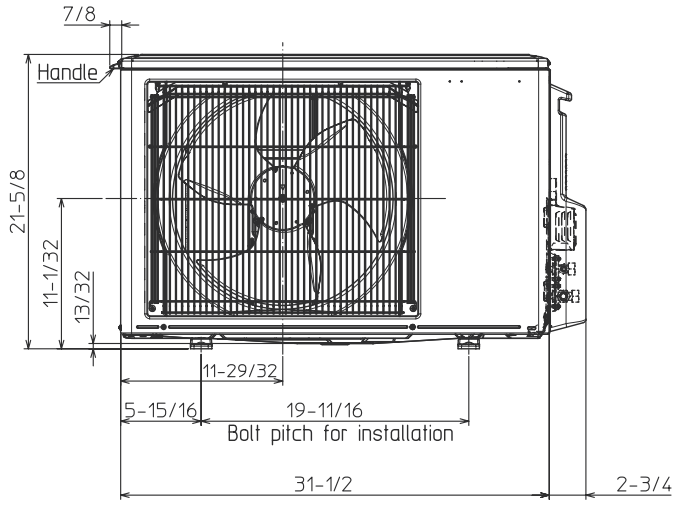

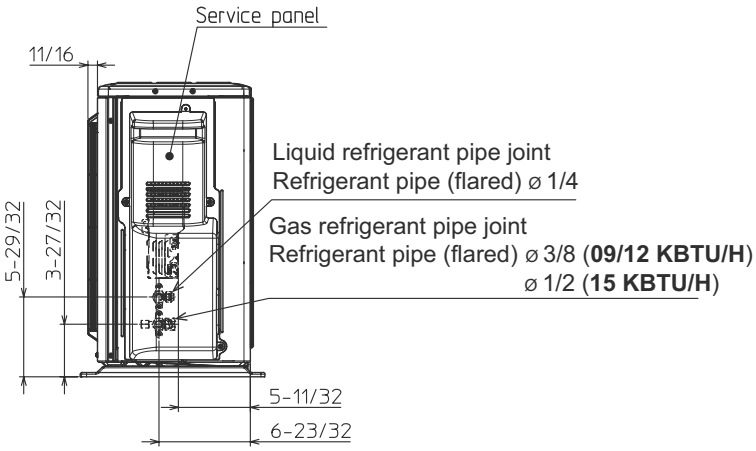

FORM# NAXWST09B112AA & NAXSST09B112AA - 202406

Specifications are subject to change without notice.

© 2024 Mitsubishi Electric Trane HVAC US LLC. All rights reserved.