# NAXWPH12B112AA & NAXSPH12B112AA
## 12,000 BTU/H DELUXE WALL-MOUNTED INDOOR UNIT
## 12,000 BTU/H HYPER-HEATING OUTDOOR UNIT

American Standard HEATING & AIR CONDITIONING

MITSUBISHI ELECTRIC

Job Name:

System Reference: Date:

Indoor Unit ..... NAXWPH12B112AA

Outdoor Unit ..... NAXSPH12B112AA

INDOOR UNIT FEATURES

- Slim wall-mounted indoor units provide zone comfort control
- Dual Barrier Coating applied to the heat exchanger, vanes and fan to prevent hydrophilic and hydrophobic dirt build-up
- Multiple fan speed options: Quiet, Low, Medium, High, Super-high, Auto
- 3D i-see Sensor® enables advance features:
  - Indirect or Direct Airflow for personalized comfort
  - Absence Detection for energy-saving mode
- Double Vane features:
  - Separates airflow to deliver air across a large area
  - Simultaneously deliver to air separate sections of a room
  - Generates more comfortable natural airflow pattern
- Multiple control options available:
  - Back-lit screen handheld remote controller (provided with unit)
  - kumo cloud® smart device app for remote access
  - Third-party interface options
  - Wired or wireless controllers
- Triple-action Filtration: Nano Platinum Filter, Deodorizing Filter, & Electrostatic Anti-Allergy Enzyme Filter
- Hot-Start Technology: no cold air rush at equipment startup or when restarting after Defrost Cycle
- Quiet operation

OUTDOOR UNIT FEATURES

- INVERTER-driven compressor and LEV provide high efficiency and comfort while using only the energy needed to maintain maximum performance
- Hyper-heating plus offers 100% heating capacity at -5° and 70% to 81% heating capacity at -13° F
- Blue Fin anti-corrosion treatment applied to the outdoor unit heat exchanger for increased coil protection and longer life

Specifications are subject to change without notice.

© 2023 Mitsubishi Electric Trane HVAC US LLC. All rights reserved.

# SPECIFICATIONS: NAXWPH12B112AA & NAXSPH12B112AA

| | | | |
|---|---|---|---|
| Cooling at 95°F[1] | Maximum Capacity | BTU/H | 13,600 |
| | Rated Capacity | BTU/H | 12,000 |
| | Minimum Capacity | BTU/H | 2,500 |
| | Maximum Power Input | W | 1,150 |
| | Rated Power Input | W | 870 |
| | Moisture Removal | Pints/h | 1.9 |
| | Sensible Heat Factor | | 0.83 |
| | Power Factor [208V / 230V] | % | 94.0 / 94.0 |
| Heating at 47°F[2] | Maximum Capacity | BTU/H | 21,000 |
| | Rated Capacity | BTU/H | 12,300 |
| | Minimum Capacity | BTU/H | 3,700 |
| | Maximum Power Input | W | 1,980 |
| | Rated Power Input | W | 850 |
| | Power Factor [208V / 230V] | % | 94.0 / 94.0 |
| Heating at 17°F[3] | Maximum Capacity | BTU/H | 17,410 |
| | Rated Capacity | BTU/H | 7,560 |
| | Maximum Power Input | W | 1,860 |
| | Rated Power Input | W | 610 |
| Heating at 5°F[4] | Maximum Capacity | BTU/H | 14,690 |
| | Maximum Power Input | W | 1,780 |
| Heating at -5°F[6] | Maximum Capacity | BTU/H | 12,300 |
| Heating at -13°F[7] | Maximum Capacity | BTU/H | 11,000 |
| Efficiency | SEER2 | | 26.3 |
| | EER2[1] | | 13.8 |
| | HSPF2 [IV] | | 11.1 |
| | COP at 47°F[2] | | 4.24 |
| | COP at 17°F at Maximum Capacity[3] | | 2.74 |
| | COP at 5°F at Maximum Capacity[4] | | 2.24 |
| | COP at -5°F at Maximum Capacity[6] | | 2.23 |
| | COP at -13°F at Maximum Capacity[7] | | 2.08 |
| | ENERGY STAR® Certified | | Yes |
| Electrical | Voltage, Phase, Frequency | | 208/230, 1, 60 |
| | Guaranteed Voltage Range | V AC | 187 - 253 |
| | Voltage: Indoor - Outdoor, S1-S2 | V AC | 208/230 |
| | Voltage: Indoor - Outdoor, S2-S3 | V DC | 24 |
| | Short-circuit Current Rating [SCCR] | kA | 5 |
| | Recommended Fuse/Breaker Size (Oudoor) | A | 15 |
| | Recommended Wire Size [Indoor - Outdoor] | AWG | 14 |
| | Power Supply | | Indoor unit is powered by the outdoor unit |
| Indoor Unit | MCA | A | 1.0 |
| | Fan Motor Full Load Amperage | A | 0.65 |
| | Fan Motor Type | | DC Motor |
| | Airflow Rate at Cooling, Dry | CFM | 137–167–221–304–424 |
| | Airflow Rate at Cooling, Wet | CFM | 117–143–190–261–364 |
| | Airflow Rate at Heating, Dry | CFM | 155–226–282–367–454 |
| | Sound Pressure Level [Cooling] | dB[A] | 21–24–29–36–44 |
| | Sound Pressure Level [Heating] | dB[A] | 21–28–32–38–43 |
| | Drain Pipe Size | In. [mm] | 5/8 [15.88] |
| | Coating on Heat Exchanger | | Dual Barrier Coating |
| | External Finish Color | | Munsell 1.0Y 9.2/0.2 |
| | Unit Dimensions | W x D x H: In. [mm] | 36-7/16 x 9-3/16 x 12 (+11/16) [925 x 234 x 305 (+17)] |
| | Package Dimensions | W x D x H: In. [mm] | 39 x 12-1/4 x 15-1/2 [990 x 310 x 400] |
| | Unit Weight | Lbs. [kg] | 29 [13.5] |
| | Package Weight | Lbs. [kg] | 34 [15.4] |
| Indoor Unit Operating Temperature Range | Cooling Intake Air Temp [Maximum / Minimum]* | °F | 90 DB, 73 WB / 67 DB, 57 WB |
| | Heating Intake Air Temp [Maximum / Minimum] | °F | 80 DB / 70 DB |

NOTES:

| | | | |
|---|---|---|---|
| AHRI Rated Conditions (Rated data is determined at a fixed compressor speed) | [1]Cooling (Indoor // Outdoor) | °F | 80 DB, 67 WB // 95 DB, 75 WB |
| | [2]Heating at 47°F (Indoor // Outdoor) | °F | 70 DB, 60 WB // 47 DB, 43 WB |
| | [3]Heating at 17°F (Indoor // Outdoor) | °F | 70 DB, 60 WB // 17 DB, 15 WB |
| Conditions | [4]Heating at 5°F (Indoor // Outdoor) | °F | 70 DB, 60 WB // 5 DB, 4 WB |
| | [6]Heating at -5°F (Indoor // Outdoor) | °F | 70 DB, 60 WB // -5 DB, -6 WB |
| | [7]Heating at -13°F (Indoor // Outdoor) | °F | 70 DB, 60 WB // -13 DB, -14 WB |

*Indoor/Outdoor Unit Operating Temperature Range (Cooling Air Temp [Maximum / Minimum]):
- Applications should be restricted to comfort cooling only; equipment cooling applications are not recommended for low ambient temperature conditions.

**Outdoor Unit Operating Temperature Range (Cooling Thermal Lock-out / Re-start Temperatures; Heating Thermal Lock-out / Re-start Temperatures):
- System cuts out in heating mode to avoid thermistor error and automatically restarts at these temperatures.

Specifications are subject to change without notice.

© 2023 Mitsubishi Electric Trane HVAC US LLC. All rights reserved.

# SPECIFICATIONS: NAXWPH12B112AA & NAXSPH12B112AA

| | | | |
|---|---|---|---|
| Outdoor Unit | MCA | A | 10.0 |
| | MOCP | A | 15 |
| | Fan Motor Full Load Amperage | A | 0.5 |
| | Fan Motor Output | W | 55 |
| | Airflow Rate [Cooling / Heating] | CFM | 1215 / 1201 |
| | Refrigerant Control | | LEV |
| | Defrost Method | | Reverse Cycle |
| | Coating on Heat Exchanger | | Blue Fin Coating |
| | Sound Pressure Level, Cooling[1] | dB(A) | 49 |
| | Sound Pressure Level, Heating[2] | dB(A) | 51 |
| | Compressor Type | | Twin Rotary |
| | Compressor Model | | SNB140FQUMT |
| | Compressor Rated Load Amps | A | 9.2 |
| | Compressor Locked Rotor Amps | A | 7.4 |
| | Compressor Oil [Type // Charge] | oz. | FV50S // 0.35 |
| | External Finish Color | | Munsell 3Y 7.8/1.1 |
| | Base Pan Heater | | Optional |
| | Unit Dimensions | W x D x H: In. [mm] | 31-1/2 x 11-1/4 x 21-5/8 [800 x 285 x 550] |
| | Package Dimensions | W x D x H: In. [mm] | 37 x 15 x 24-1/2 [940 x 380 x 630] |
| | Unit Weight | Lbs. [kg] | 83 [37.5] |
| | Package Weight | Lbs. [kg] | 90 [40.5] |
| Outdoor Unit Operating Temperature Range | Cooling Air Temp [Maximum / Minimum]* | °F | 115 DB / 14 DB |
| | Cooling Thermal Lock-out / Re-start Temperatures** | °F | -4 / 0 |
| | Heating Air Temp [Maximum / Minimum] | °F | 75 DB, 65 WB / -13 DB, -14 WB |
| | Heating Thermal Lock-out / Re-start Temperatures** | °F | -18 / -14 |
| Refrigerant | Type | | R410A |
| | Pre-Charged Refrigerant Amount | Lbs, oz | 2.0, 9.0 |
| | Maximum Pre-Charged Piping Length | Ft. [m] | 25.0 [7.5] |
| | Additional Refrigerant Charge Per Additional Piping Length | oz./Ft. [g/m] | 0.216 [20] |
| Piping | Gas Pipe Size O.D. [Flared] | In.[mm] | 3/8 [9.52] |
| | Liquid Pipe Size O.D. [Flared] | In.[mm] | 1/4 [6.35] |
| | Maximum Piping Length | Ft. [m] | 65 [20] |
| | Maximum Height Difference | Ft. [m] | 40 [12] |
| | Maximum Number of Bends | | 10 |

NOTES:

| | | | |
|---|---|---|---|
| AHRI Rated Conditions (Rated data is determined at a fixed compressor speed) | [1]Cooling (Indoor // Outdoor) | °F | 80 DB, 67 WB // 95 DB, 75 WB |
| | [2]Heating at 47°F (Indoor // Outdoor) | °F | 70 DB, 60 WB // 47 DB, 43 WB |
| | [3]Heating at 17°F (Indoor // Outdoor) | °F | 70 DB, 60 WB // 17 DB, 15 WB |
| Conditions | [4]Heating at 5°F (Indoor // Outdoor) | °F | 70 DB, 60 WB // 5 DB, 4 WB |
| | [6]Heating at -5°F (Indoor // Outdoor) | °F | 70 DB, 60 WB // -5 DB, -6 WB |
| | [7]Heating at -13°F (Indoor // Outdoor) | °F | 70 DB, 60 WB // -13 DB, -14 WB |

*Indoor/Outdoor Unit Operating Temperature Range (Cooling Air Temp [Maximum / Minimum]):
- Applications should be restricted to comfort cooling only; equipment cooling applications are not recommended for low ambient temperature conditions.

**Outdoor Unit Operating Temperature Range (Cooling Thermal Lock-out / Re-start Temperatures; Heating Thermal Lock-out / Re-start Temperatures):
- System cuts out in heating mode to avoid thermistor error and automatically restarts at these temperatures.

Specifications are subject to change without notice.

© 2023 Mitsubishi Electric Trane HVAC US LLC. All rights reserved.

# INDOOR UNIT ACCESSORIES: NAXWPH12B112AA

| | | |
|---|---|---|
| Control Interface | CN24 Relay Kit | ☐ CN24RELAY-KIT-CM3 |
| | IT Extender | ☐ PAC-WHS01IE-E |
| | kumo station® for kumo cloud® | ☐ TAC-WHS01HC-E |
| | Procon BACnet® and Modbus® Interface | ☐ PAC-UKPRC001-CN-1 |
| | System Control Interface | ☐ MAC-334IF-E |
| | Thermostat Interface | ☐ PAC-US444CN-1 |
| | Thermostat Interface | ☐ PAC-US445CN-1 |
| | USNAP Adapter | ☐ PAC-WHS01UP-E |
| | Wireless Interface for kumo cloud® | ☐ PAC-USWHS002-WF-2 |
| Remote Sensor | Wired Remote Sensor | ☐ M21EAA307 |
| | Wireless temperature and humidity sensor for kumo cloud® | ☐ PAC-USWHS003-TH-1 |
| Wired Remote Controller | Deluxe Wired MA Remote Controller† | ☐ AAR-40MAAU |
| | Simple Ductless Wired Remote Controller | ☐ PAC-SDW01RC-1 |
| | Simple MA Remote Controller† | ☐ PAC-YT53CRAU-J |
| | Touch MA Controller† | ☐ PAR-CT01MAU-SB |
| Wireless Remote Controller | kumo touch™ RedLINK™ Wireless Controller | ☐ MHK2 |
| | Lockdown bracket for remote controller | ☐ RCMKP1CB |
| Condensate | Blue Diamond (Advanced) Mini Condensate Pump w/ Reservoir & Sensor (208/230V) [recommended] | ☐ X87-721 |
| | Blue Diamond (MicroBlue) Mini Condensate Pump (110/208/230V) up to 18,000 BTU/H | ☐ X86-003 |
| | Blue Diamond Alarm Extension Cable—6.5 Ft. | ☐ C13-192 |
| | Blue Diamond MultiTank — collection tank for use with multiple pumps | ☐ C21-014 |
| | Blue Diamond Sensor Extension Cable — 15 Ft. | ☐ C13-103 |
| | Drain Pan Level Sensor/Control | ☐ SS610E |
| | Fascia Kit for MicroBlue Pump, mounts the MicroBlue and sensor directly beneath indoor unit | ☐ T18-016 |
| | Refco Condensate Pump (100-240 VAC) | ☐ GOBI-II |
| | Refco Condensate Pump (100-240 VAC) up to 120,000 BTU/H | ☐ COMBI |
| | Sauermann Condensate Pump | ☐ SI30-230 |
| Disconnect Switch | (30A/600V/UL) [fits 2” X 4” utility box] - Black | ☐ TAZ-MS303 |
| | (30A/600V/UL) [fits 2” X 4” utility box] - White | ☐ TAZ-MS303W |
| Filter | Electro Static Anti-allergy Enzyme Filter | ☐ MAC-2330FT-E |
| | Platinum Deodorizing Filter | ☐ MAC-3000FT-E |
| Lineset | 15’ x 1/4” x 15’ / 3/8” Lineset (Twin-Tube Insulation) | ☐ MLS143812T-15 |
| | 30’ x 1/4” x 30’ / 3/8” Lineset (Twin-Tube Insulation) | ☐ MLS143812T-30 |
| | 50’ x 1/4” x 50’ / 3/8” Lineset (Twin-Tube Insulation) | ☐ MLS143812T-50 |
| | 65’ x 1/4” x 65’ / 3/8” Lineset (Twin-Tube Insulation) | ☐ MLS143812T-65 |

NOTES:
†Requires MAC-334IF-E
- Nv-Series EZ FIT® Recessed Ceiling Cassette, Floor-mount and Wall-mount
  Allows indoor units to connect to an MA Controller:
  Deluxe MA Remote Controller
  Simple MA Controller
  Touch MA Controller


© 2023 Mitsubishi Electric Trane HVAC US LLC. All rights reserved.

# OUTDOOR UNIT ACCESSORIES: NAXSPH12B112AA

| | | |
|---|---|---|
| Control/Service Tool | M- & P-Series Maintenance Tool Cable Set | ☐ M21EC0397 |
| | USB/UART Conversion Cable (Required for all laptop connection) | ☐ M21EC1397 |
| Drain Socket | Drain Socket | ☐ MAC-871DS |
| Hail Guards | Hail Guard | ☐ HG-B4 |
| Mini-Split Wire | 14 Gauge, 4 wire MiniSplit Cable—250 ft. roll | ☐ S144-250 |
| | 14 Gauge, 4 wire MiniSplit Cable—50 ft. roll | ☐ S144-50 |
| | 16 Gauge, 4 wire MiniSplit Cable—250 ft. roll | ☐ S164-250 |
| | 16 Gauge, 4 wire MiniSplit Cable—50 ft. roll | ☐ S164-50 |
| Mounting Pad | Condensing Unit Mounting Pad: 16” x 36” x 3” | ☐ ULTRILITE1 |
| | Outdoor Unit 3-1/4 inch Mounting Base (Pair) - Plastic | ☐ DSD-400P |
| Optional Defrost Heater | Optional Defrost Heater | ☐ MAC-640BH-U |
| Stand | 18” Single Fan Stand | ☐ QSMS1801M |
| | 24” Single Fan Stand | ☐ QSMS2401M |
| | Condenser Wall Bracket | ☐ QSWB2000M-1 |
| | Condenser Wall Bracket - Stainless Steel Finish | ☐ QSWBSS |
| | Outdoor Unit Stand — 12” High | ☐ QSMS1201M |


© 2023 Mitsubishi Electric Trane HVAC US LLC. All rights reserved.

# INDOOR UNIT DIMENSIONS: NAXWPH12B112AA

**Unit: inch**

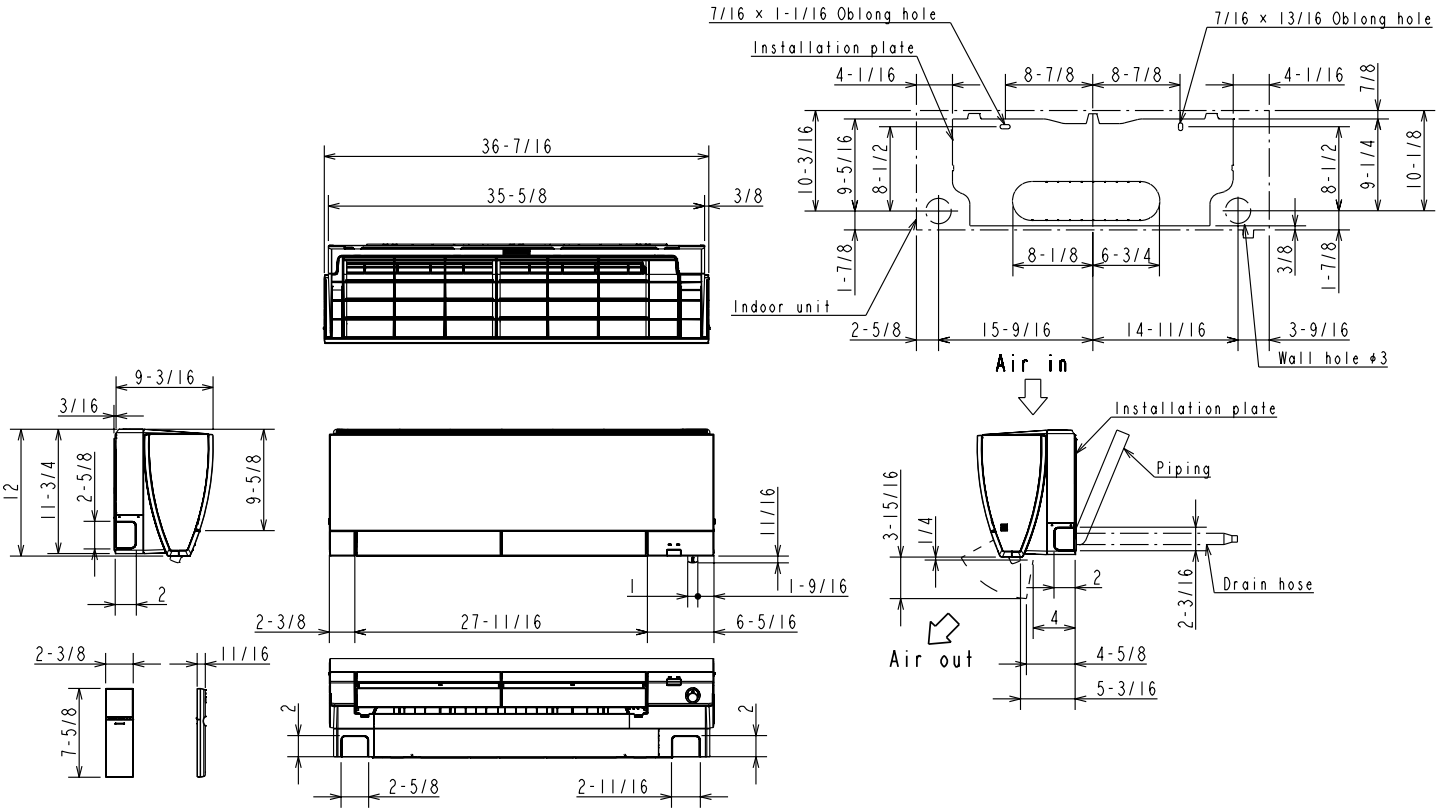


**(06/09/12 KBTU/H)**

| | | |
|---|---|---|
| Piping | Insulation | ϕ1-7/16 O.D |
| | Liquid line | ϕ1/4 19-11/16 (Flared connection ϕ1/4) |
| | Gas line | ϕ3/8 16-15/16 (Flared connection ϕ3/8) |
| Drain hose | | Insulation ϕ1-1/8 Connected part ϕ5/8 O.D |

**(15/18 KBTU/H)**

| | | |
|---|---|---|
| Piping | Insulation | ϕ1-7/16 O.D |
| | Liquid line | ϕ1/4 19-11/16 (Flared connection ϕ1/4) |
| | Gas line | ϕ3/8 16-15/16 (Flared connection ϕ1/2) |
| Drain hose | | Insulation ϕ1-1/8 Connected part ϕ5/8 O.D |


© 2023 Mitsubishi Electric Trane HVAC US LLC. All rights reserved.

# OUTDOOR UNIT DIMENSIONS: NAXSPH12B112AA

**Unit: inch**

## REQUIRED SPACE

*1 4 in. (100 mm) or more when front and sides of the unit are clear

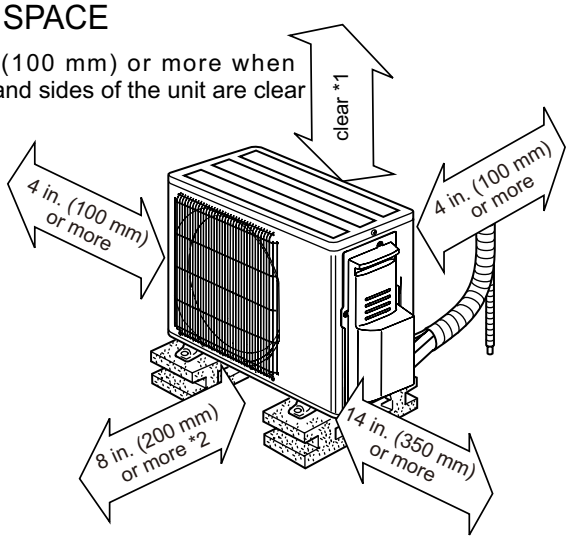


*2 When any 2 sides of left, right and rear of the unit are clear

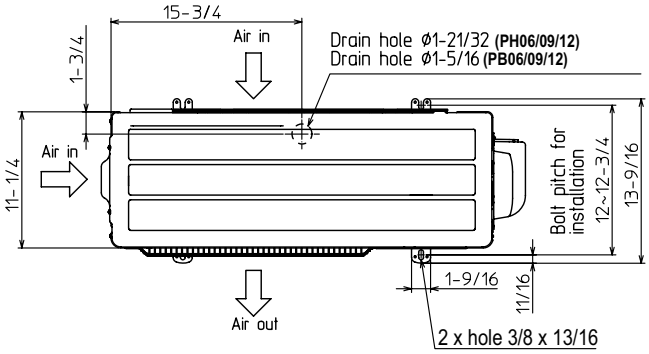


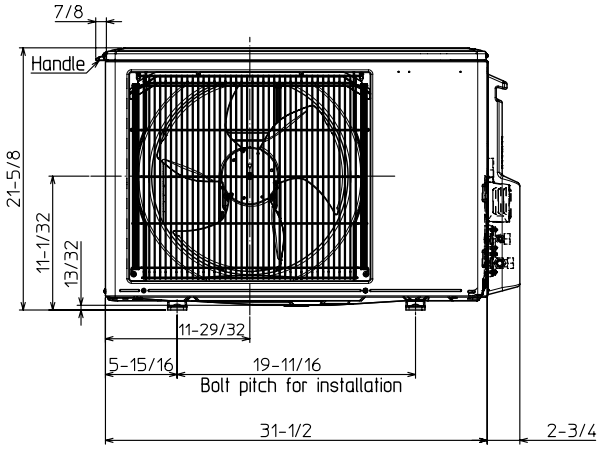


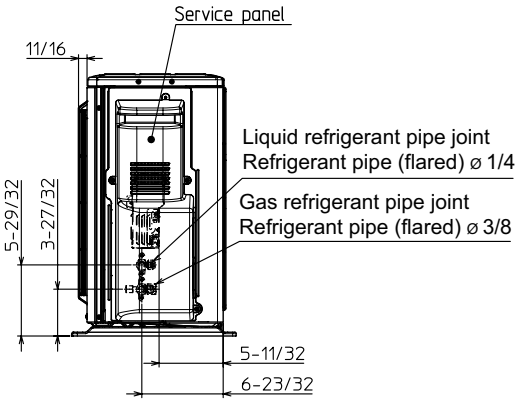


FORM# NAXWPH12B112AA & NAXSPH12B112AA - 202309

Specifications are subject to change without notice.

© 2023 Mitsubishi Electric Trane HVAC US LLC. All rights reserved.