American Standard
HEATING & AIR CONDITIONING

MITSUBISHI ELECTRIC

July 2022
No. OCBA730
REVISED EDITION-B

PARTS CATALOG

[Model Name]
<Outdoor unit>

NAXMMX48A182BA
NAXMMX60A182BA
NAXMPH36A142BA
NAXMPH42A152BA
NAXMPH48A182BA

TAC-MKA32BC
TAC-MKA52BC

Revision:
- Parts No. of side panel (R) and service panel have been updated in REVISED EDITION-B.

OCBA730A is void.

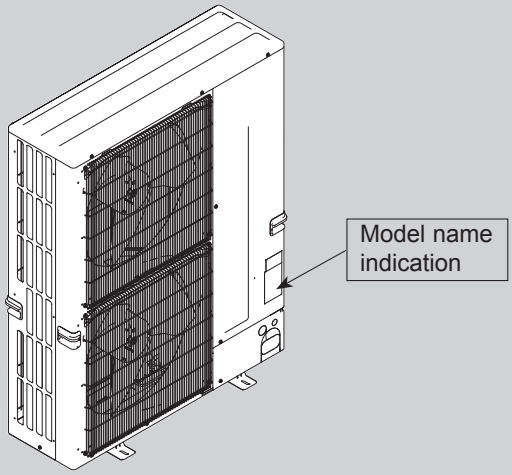

OUTDOOR UNIT: NAXMPH36A142BA

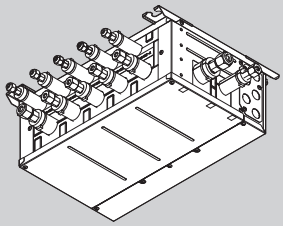

BRANCH BOX: TAC-MKA52BC

CONTENTS

1. SERVICE PARTS LIST ····· 2
2. OPTIONAL PARTS ····· 12

SERVICE MANUAL (OCHA730)

1 SERVICE PARTS LIST

1-1. OUTDOOR UNIT STRUCTURAL PARTS

NAXMMX48A182BA
NAXMMX60A182BA
NAXMPH36A142BA
NAXMPH42A152BA
NAXMPH48A182BA

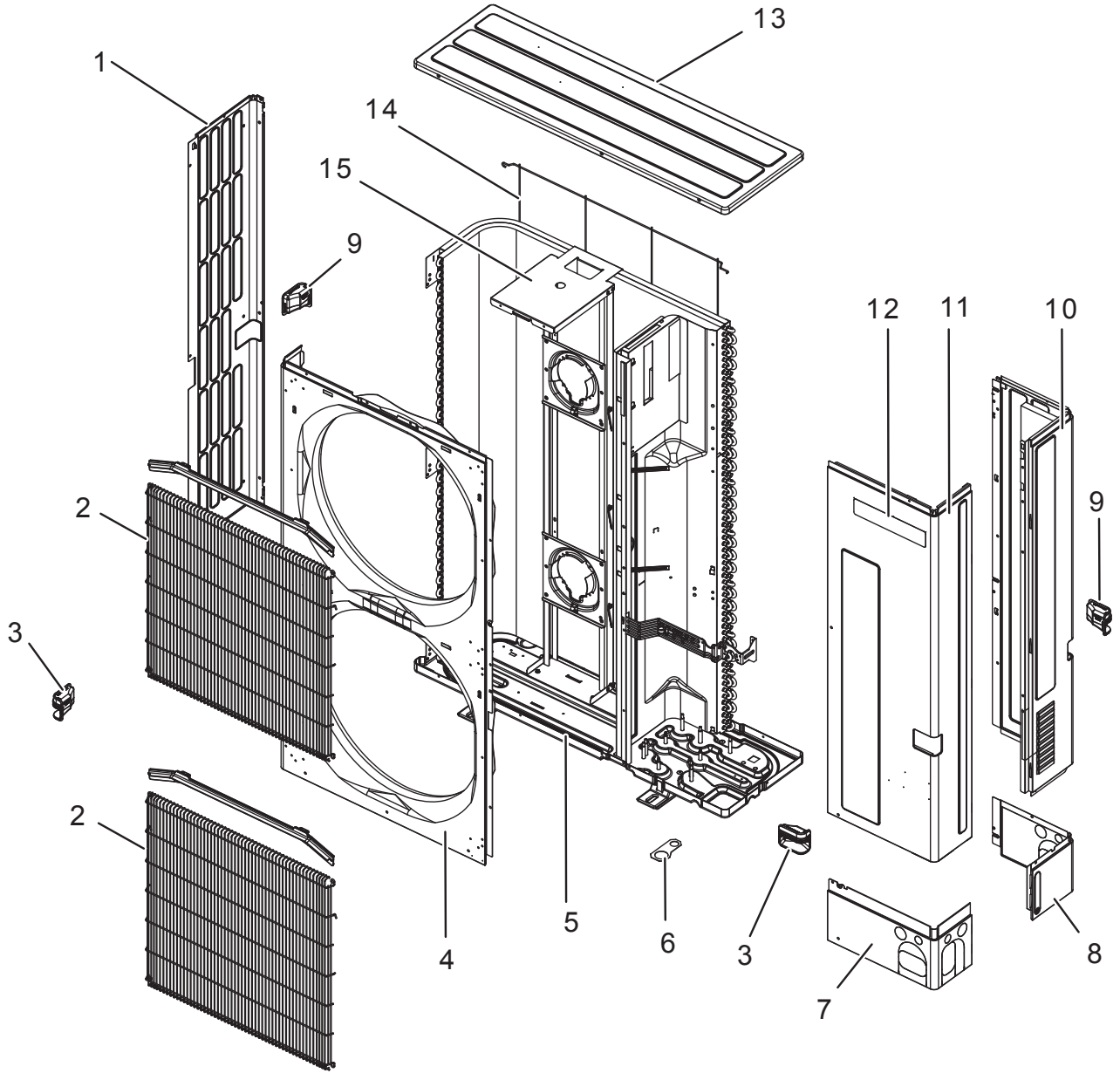

1. The part quantity below indicates the required number of pieces per unit.
2. The circled No. indicates that the part is not shown in the figure.

No.	Parts No.	Parts Name	NAXMMX48A182BA	NAXMMX60A182BA	NAXMPH36A142BA	NAXMPH42A152BA	NAXMPH48A182BA	Remarks
1	R 0 1 E 3 0 6 6 2	SIDE PANEL (L)	1	1	1	1	1	
2	R 0 1 E 7 3 6 9 1	WIRE GRILLE	2	2	2	2	2	
3	R 0 1 E 0 5 6 5 5	HANDLE (FRONT)	2	2	2	2	2	
4	R 0 1 E 2 3 6 6 8	FRONT PANEL	1	1	1	1	1	
5	R 0 1 E 5 3 6 8 6	BASE ASSY	1	1	1	1	1	
6	T 7 W E 0 5 6 1 7	CONDUIT PLATE	1	1	1	1	1	
7	R 0 1 E 3 5 6 5 8	COVER PANEL (FRONT)	1	1	1	1	1	
8	R 0 1 E 3 6 6 5 8	COVER PANEL (REAR)	1	1	1	1	1	
9	R 0 1 E 0 6 6 5 5	HANDLE (REAR)	2	2	2	2	2	
10	R 0 1 E 8 1 6 6 1	SIDE PANEL (R)	1					
10	R 0 1 E 7 4 6 6 1	SIDE PANEL (R)		1	1	1	1	
11	T 7 W E 2 8 6 6 8	SERVICE PANEL	1					
11	T 7 W E 2 4 6 6 8	SERVICE PANEL		1	1	1	1	
12	T 7 W A 2 1 0 0 5	BRAND LABEL-MX/A (J)	1	1	1	1	1	
13	R 0 1 E 3 6 6 4 1	TOP PANEL	1	1	1	1	1	
14	R 0 1 E 1 0 6 9 8	REAR GUARD	1	1	1	1	1	
15	R 0 1 E 5 9 1 3 0	MOTOR SUPPORT	1		1	1	1	
15	R 0 1 E 6 0 1 3 0	MOTOR SUPPORT		1				

1-2. OUTDOOR UNIT FUNCTIONAL AND ELECTRICAL PARTS

NAXMMX48A182BA

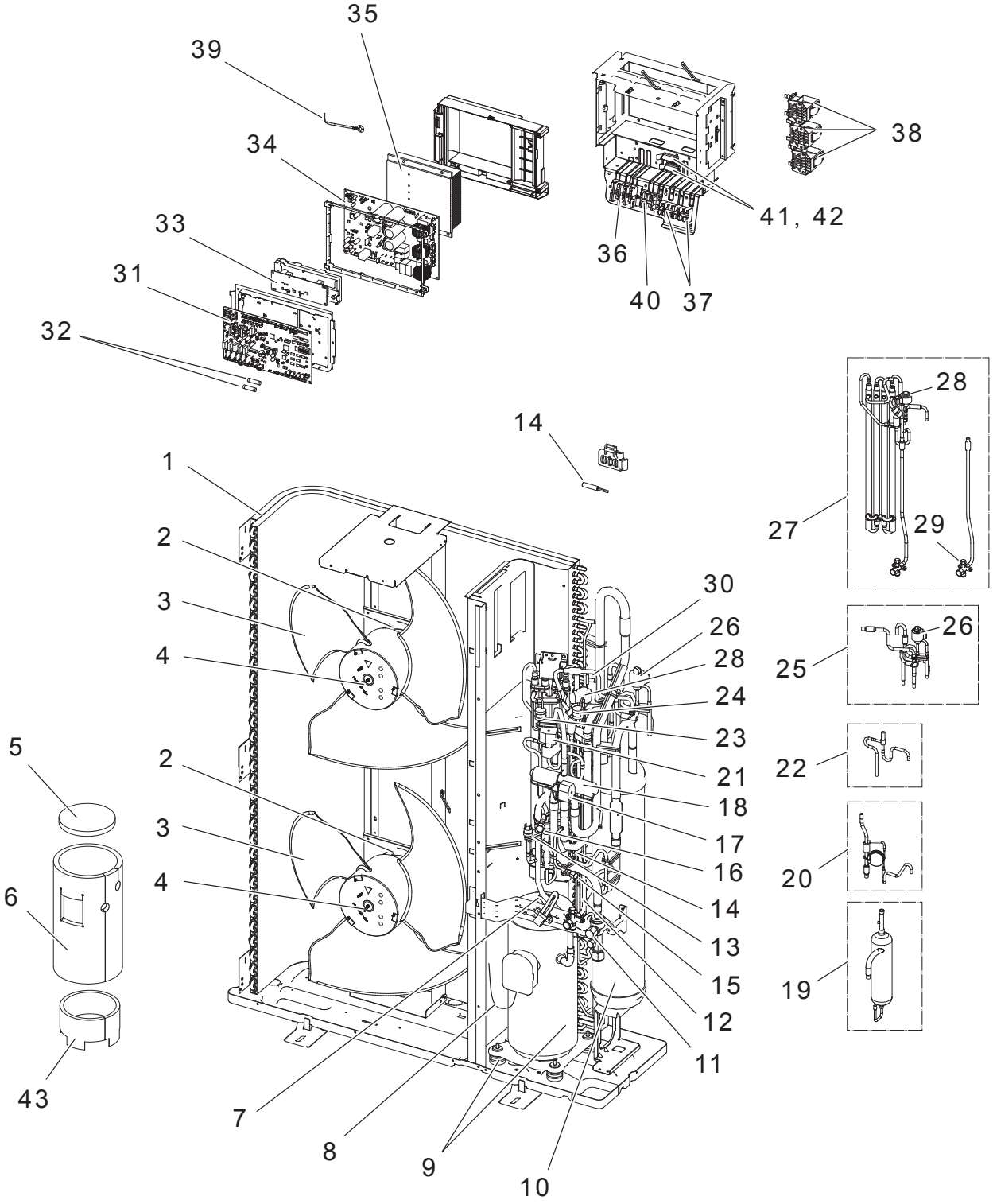

1. The part quantity below indicates the required number of pieces per unit.
2. The circled No. indicates that the part is not shown in the figure.

No.	Parts No.	Parts Name	NAXMMX48A182BA	Wiring Diagram Symbol	Remarks
1	R01 R65 408	HEAT EXCHANGER	1		
2	T7W A10 221	FAN MOTOR	2	MF1, MF2	
3	R01 E16 115	PROPELLER FAN/D550	2		
4	R01 E16 097	CAP NUT (MEC) M6	2		
5	R01 A57 602	COMP FELT (TOP)	1		
6	T7W B04 602	COMP FELT-B/ANB33FN	1		
7	R01 E36 201	THERMISTOR (SHELL)	1	TH4 (Compressor)	
8	R01 C11 510	LEAD ASSY COMP	1		
9	T97 477 077	COMPRESSOR	1	MC	ANB33FNHMT, Includes RUBBER MOUNT
10	R01 E81 440	ACCUMULATOR	1		
11	T7W E11 411	BALL VALVE & STRAINER	1		5/8
12	R01 M30 202	THERMISTOR	1	TH2 (HIC Pipe)	
13	T7W E15 208	H. P. SWITCH UL4.14MPA	1	63H	
14	R01 M31 202	THERMISTOR W	1	TH6 (Suction Pipe), TH7 (Ambient)	Combined Port
15	T7W E13 413	CHARGE PLUG/LB54	1		Lo
16	R01 E12 413	CHARGE PLUG/LB90	1		Hi
17	T7W F00 242	SOLENOID COIL (21S4)	1	21S4	Includes SCREW
18	R01 E40 403	4WAY VALVE	1	21S4	
19	R01 E16 490	OIL SEPARATOR	1		
20	R01 E02 426	CT ASSY	1		
21	T7W E91 242	SOLENOID COIL (SV)	1	SV1	Includes SCREW
22	T7W E11 428	SV1 ASSY	1	SV1	
23	R01 E14 208	H. P. SENSOR	1	63HS	
24	R01 E04 209	LOW PRESSURE SENSOR	1	63LS	
25	R01 R27 401	LEV ASSY-A	1	LEV-A	
26	R01 HR1 242	COIL (LEV)/XAP-5P WH	1	LEV-A	
27	T7W B07 401	HIC & LEV-B ASSY	1	LEV-B	
28	R01 H58 242	COIL (LEV)/XAP-5P RED	1	LEV-B	
29	T7W E15 410	STOP VALVE ASSY-3/8F	1		3/8
30	R01 H87 202	THERMISTOR	1	TH3 (Outdoor Liquid Pipe)	
31	R01 M03 350	CONTROLLER BOARD	1	MULTI.B.	
32	R01 E14 239	FUSE 6.3 A 250 V	2	F1, F2	6.3 A 250 V
33	R01 E07 311	M-NET POWER BOARD	1	M-NET P.B.	
34	R01 M05 353	POWER BOARD	1	P.B.	
35	R01 A22 371	HEAT SINK	1		Includes SCREWS
36	T7W 603 246	T.B./L1.L2.GR	1	TB1	3P (L1, L2, GR)
37	R01 E27 246	T.B./M1.M2.S	2	TB3, TB7	3P (M1, M2, S)
38	R01 E56 259	REACTOR	3	DCL	
39	R01 M15 202	THERMISTOR (HS)	1	TH8 (Heat Sink)	
40	T7W E57 716	T.B./B1.B2	1	TB1B	2P (B1, B2)
41	R01 E20 239	FUSE 20 A 250 V	2	FUSE1, 2	20 A 250 V
42	R01 30L 241	FUSE HOLDER	2		
43	R01 U00 602	COMP FELT-U/ANB	1		

1-2. OUTDOOR UNIT FUNCTIONAL AND ELECTRICAL PARTS

NAXMMX60A182BA

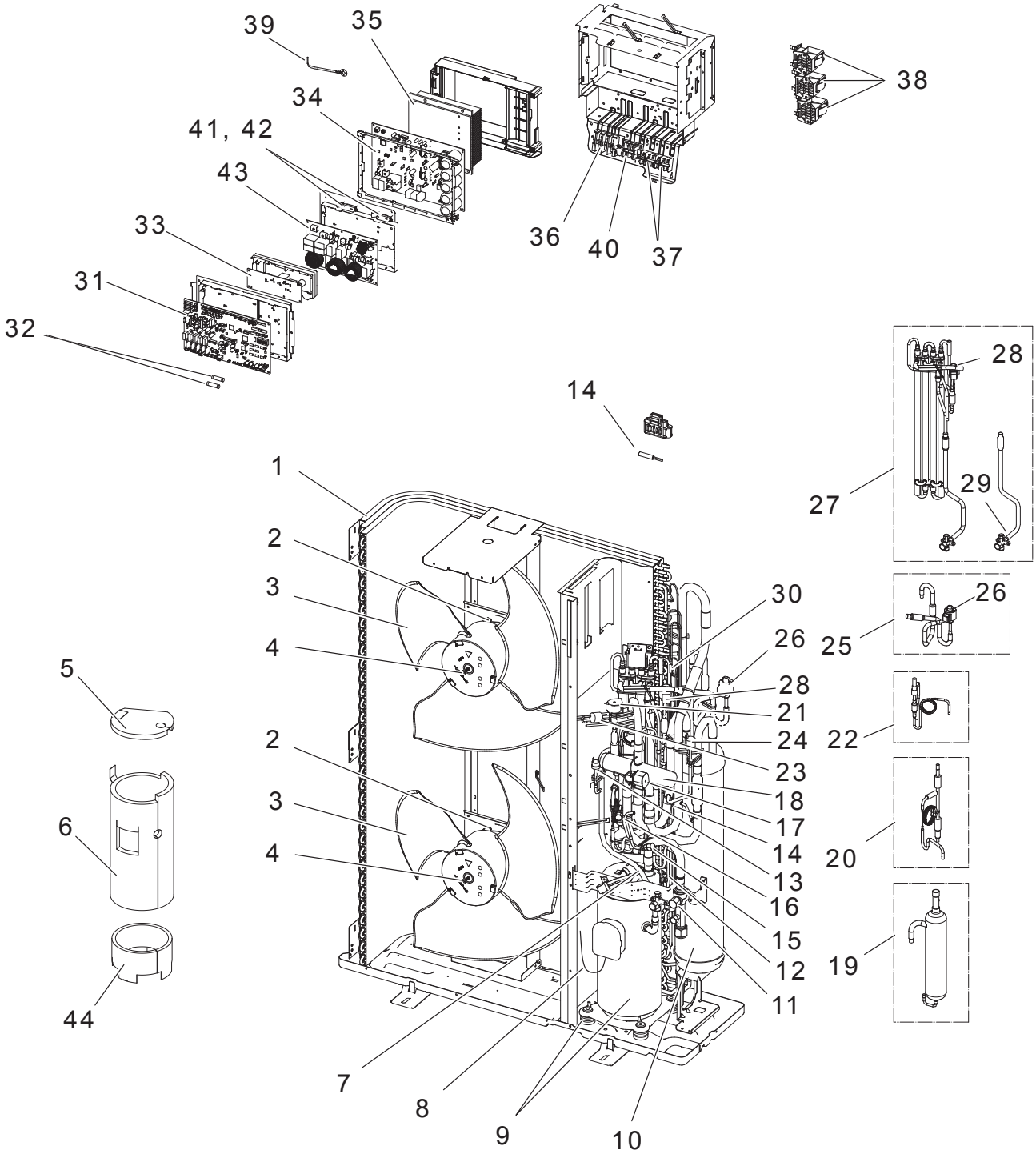

1. The part quantity below indicates the required number of pieces per unit.
2. The circled No. indicates that the part is not shown in the figure.

No.	Parts No.	Parts Name	NAXMMX60A182BA	Wiring Diagram Symbol	Remarks
1	R01 H66 408	HEAT EXCHANGER	1		
2	T7W A12 221	FAN MOTOR	2	MF1, MF2	
3	R01 E16 115	PROPELLER FAN/D550	2		
4	R01 E16 097	CAP NUT (MEC) M6	2		
5	T7W A15 602	COMP FELT (TOP)	1		
6	T7W B05 602	COMP FELT-B/ANB52	1		
7	R01 E36 201	THERMISTOR (SHELL)	1	TH4 (Compressor)	
8	R01 C12 510	LEAD ASSY COMP	1		
9	T97 479 077	COMPRESSOR	1	MC	ANB52FYDMT, Includes RUBBER MOUNT
10	R01 H67 440	ACCUMULATOR	1		
11	T7W E13 411	BALL VALVE & STRAINER	1		3/4
12	R01 M30 202	THERMISTOR	1	TH2 (HIC Pipe)	
13	T7W E15 208	H. P. SWITCH UL4.14MPA	1	63H	
14	R01 M31 202	THERMISTOR W	1	TH6 (Suction Pipe), TH7 (Ambient)	Combined Port
15	R01 E12 413	CHARGE PLUG/LB90	1		Lo
16	R01 E12 413	CHARGE PLUG/LB90	1		Hi
17	T7W F00 242	SOLENOID COIL (21S4)	1	21S4	Includes SCREW
18	T7W E09 403	4WAY VALVE	1	21S4	
19	R01 E14 490	OIL SEPARATOR	1		
20	T7W H06 426	CT ASSY	1		
21	T7W E91 242	SOLENOID COIL (SV)	1	SV1	Includes SCREW
22	T7W E12 428	SV1 ASSY	1	SV1	
23	R01 E14 208	H. P. SENSOR	1	63HS	
24	R01 E04 209	LOW PRESSURE SENSOR	1	63LS	
25	T7W H61 401	LEV ASSY-A/C-HIC	1	LEV-A	
26	R01 H39 242	COIL (LEV)/XAP-5P WH	1	LEV-A	
27	T7W B08 401	HIC & LEV-B ASSY	1	LEV-B	
28	R01 H58 242	COIL (LEV)/XAP-5P RED	1	LEV-B	
29	T7W E16 410	STOP VALVE ASSY-3/8F	1		3/8
30	R01 H87 202	THERMISTOR	1	TH3 (Outdoor Liquid Pipe)	
31	T7W M08 315	CONTROLLER BOARD	1	MULTI.B.	
32	R01 E14 239	FUSE 6.3A 250V	2	F1, F2	6.3A 250V
33	R01 E07 311	M-NET POWER BOARD	1	M-NET P.B.	
34	T7W M01 323	POWER BOARD	1	P.B.	
35	R01 A23 371	HEAT SINK	1		Includes SCREWS
36	T7W 603 246	T.B./L1.L2.GR	1	TB1	3P (L1, L2, GR)
37	R01 E27 246	T.B./M1.M2.S	2	TB3, TB7	3P (M1, M2, S)
38	R01 E56 259	REACTOR	3	DCL	
39	R01 M16 202	THERMISTOR (HS)	1	TH8 (Heat Sink)	
40	T7W E57 716	T.B./B1.B2	1	TB1B	2P (B1, B2)
41	R01 E20 239	FUSE 20 A 250 V	2	FUSE1, 2	20 A 250 V
42	R01 30L 241	FUSE HOLDER	2		
43	T7W E39 346	NOISE FILTER	1	N.F.	
44	R01 U00 602	COMP FELT-U/ANB	1		

1-2. OUTDOOR UNIT FUNCTIONAL AND ELECTRICAL PARTS

NAXMPH36A142BA
NAXMPH42A152BA
NAXMPH48A182BA

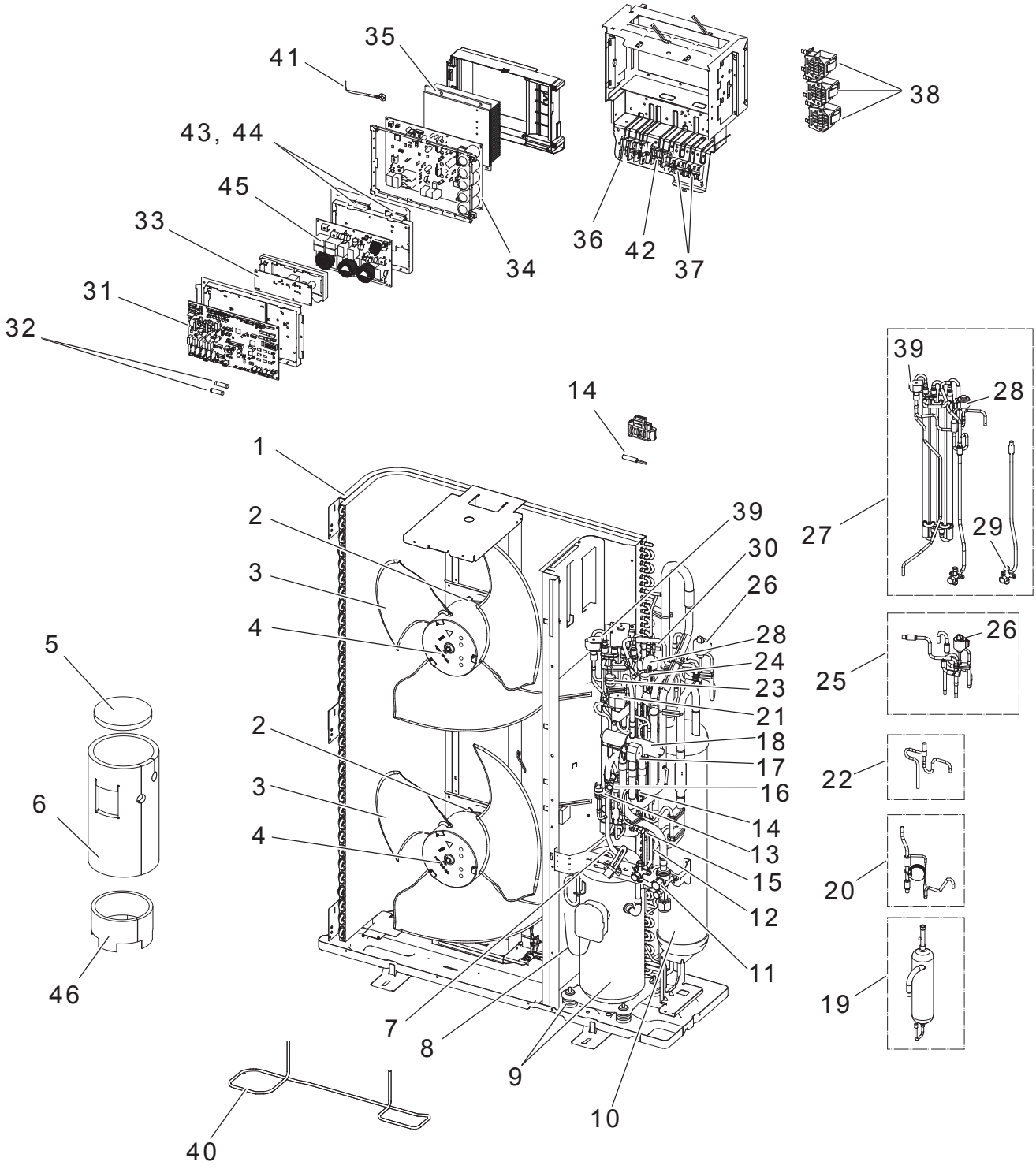

1. The part quantity below indicates the required number of pieces per unit.
2. The circled No. indicates that the part is not shown in the figure.

No.	Parts No.	Parts Name	NAXMPH36A142BA	NAXMPH42A152BA	NAXMPH48A182BA	Wiring Diagram Symbol	Remarks
1	R01 R65 408	HEAT EXCHANGER	1	1	1		
2	T7W A10 221	FAN MOTOR	2	2	2	MF1, MF2	
3	R01 E16 115	PROPELLER FAN/D550	2	2	2		
4	R01 E16 097	CAP NUT (MEC) M6	2	2	2		
5	R01 A57 602	COMP FELT (TOP)	1	1	1		
6	T7W B03 602	COMP FELT-B/ANB33FJ	1	1	1		
7	R01 E36 201	THERMISTOR (SHELL)	1	1	1	TH4 (Compressor)	
8	R01 C13 510	LEAD ASSY COMP	1	1	1		
9	T97 443 077	COMPRESSOR	1	1	1	MC	ANB33FJSMT, Includes RUBBER MOUNT
10	R01 E81 440	ACCUMULATOR	1	1	1		
11	T7W E11 411	BALL VALVE & STRAINER	1	1	1		5/8
12	R01 M30 202	THERMISTOR	1	1	1	TH2 (HIC Pipe)	
13	T7W E15 208	H. P. SWITCH UL4.14MPA	1	1	1	63H	
14	R01 M31 202	THERMISTOR W	1	1	1	TH6 (Suction Pipe), TH7 (Ambient)	Combined Port
15	T7W E13 413	CHARGE PLUG/LB54	1	1	1		Lo
16	R01 E12 413	CHARGE PLUG/LB90	1	1	1		Hi
17	T7W F00 242	SOLENOID COIL (21S4)	1	1	1	21S4	Includes SCREW
18	R01 E40 403	4WAY VALVE	1	1	1	21S4	
19	R01 E16 490	OIL SEPARATOR	1	1	1		
20	R01 E02 426	CT ASSY	1	1	1		
21	T7W E91 242	SOLENOID COIL (SV)	1	1	1	SV1	Includes SCREW
22	T7W E11 428	SV1 ASSY	1	1	1	SV1	
23	R01 E14 208	H. P. SENSOR	1	1	1	63HS	
24	R01 E04 209	LOW PRESSURE SENSOR	1	1	1	63LS	
25	R01 R27 401	LEV ASSY-A	1	1	1	LEV-A	
26	R01 HR1 242	COIL (LEV)/XAP-5P WH	1	1	1	LEV-A	
27	T7W B09 401	HIC & LEV-B ASSY	1	1	1	LEV-B	
28	R01 H58 242	COIL (LEV)/XAP-5P RED	1	1	1	LEV-B	
29	T7W E15 410	STOP VALVE ASSY-3/8F	1	1	1		3/8
30	R01 H87 202	THERMISTOR	1	1	1	TH3 (Outdoor Liquid Pipe)	
31	R01 M03 350	CONTROLLER BOARD	1	1	1	MULTI.B.	
32	R01 E14 239	FUSE 6.3A 250V	2	2	2	F1, F2	6.3A 250V
33	R01 E07 311	M-NET POWER BOARD	1	1	1	M-NET P.B.	
34	T7W M01 323	POWER BOARD	1	1	1	P.B.	
35	R01 A23 371	HEAT SINK	1	1	1		Includes SCREWS
36	T7W 603 246	T.B./L1.L2.GR	1	1	1	TB1	3P (L1, L2, GR)
37	R01 E27 246	T.B./M1.M2.S	2	2	2	TB3, TB7	3P (M1, M2, S)
38	R01 E56 259	REACTOR	3	3	3	DCL	
39	T7W E72 242	SOLENOID COIL (SV)	1	1	1	SV2	Includes SCREW
40	T7W B03 300	BASE HEATER	1	1	1	BH, THP	
41	R01 M16 202	THERMISTOR (HS)	1	1	1	TH8 (Heat Sink)	
42	T7W E57 716	T.B./B1.B2	1	1	1	TB1B	2P (B1, B2)
43	R01 E20 239	FUSE 20 A 250 V	2	2	2	FUSE1, 2	20 A 250 V
44	R01 30L 241	FUSE HOLDER	2	2	2		
45	T7W E39 346	NOISE FILTER	1	1	1	N.F.	
46	R01 U00 602	COMP FELT-U/ANB	1	1	1		

1-3. BRANCH BOX FUNCTIONAL PARTS
TAC-MKA32BC
TAC-MKA52BC

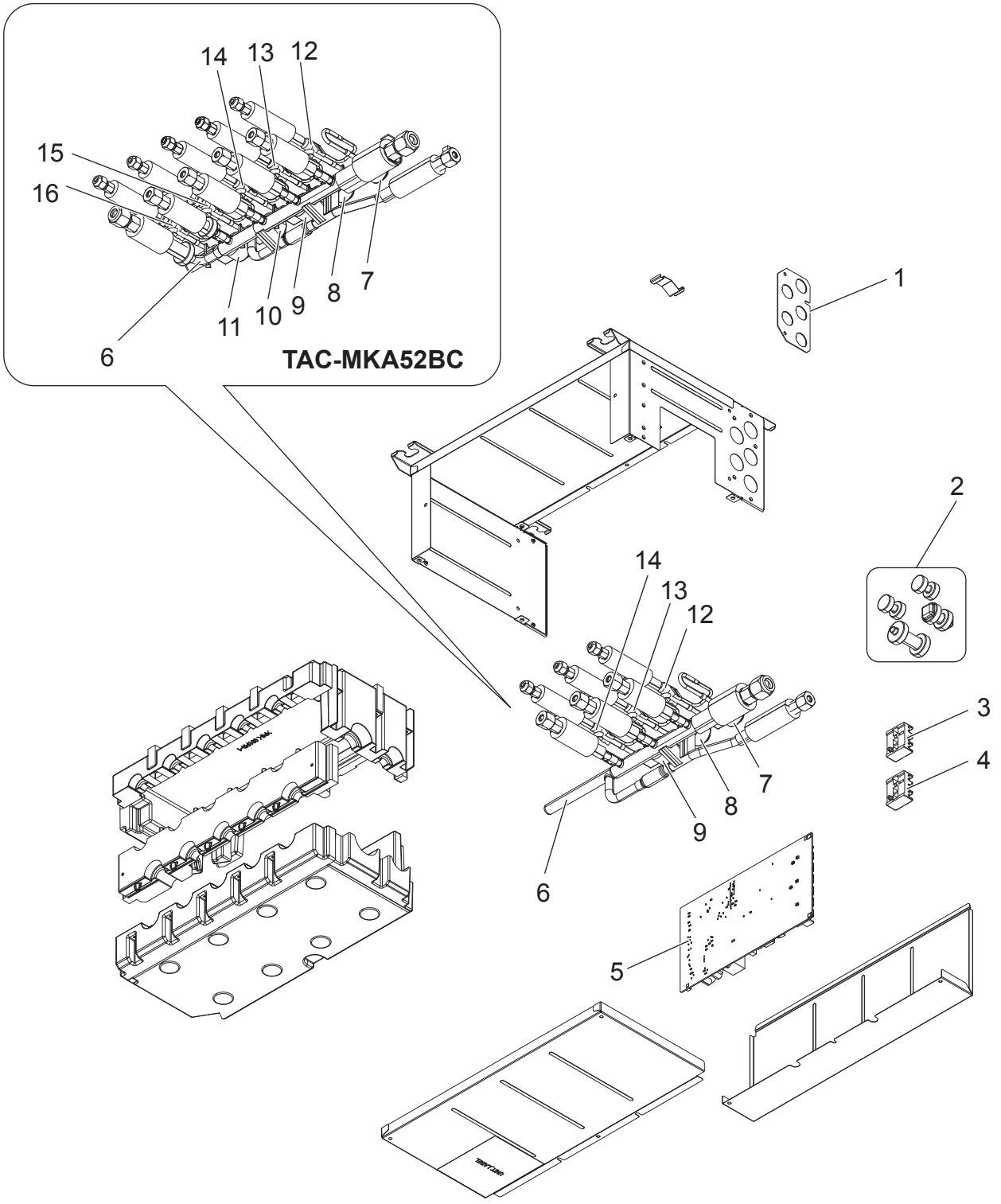

1. The part quantity below indicates the required number of pieces per unit.
2. The circled No. indicates that the part is not shown in the figure.

No.	Parts No.	Parts Name	TAC-MKA32BC	TAC-MKA52BC	Wiring Diagram Symbol	Remarks
1	T7W E06 617	CONDUIT PLATE	1	1		
2	R01 E04 124	BUSH SET	1			
3	T7W E60 716	T.B./M1.M2.S	1	1	TB5	3P (M1, M2, S)
4	T7W E59 716	T.B./L1.L2	1	1	TB2B	2P (L1, L2)
5	T7W F23 310	CONTROLLER BOARD	1		B.C.	
5	T7W F24 310	CONTROLLER BOARD		1	B.C.	
6	T7W F07 401	LEV ASSY MKA32BC	1			Includes coils
6	T7W F08 401	LEV ASSY MKA52BC		1		Includes coils
7	T7W E73 242	COIL(LEV)/XAP-5P WH	1	1	LEV-A (WHITE)	
8	R01 H38 242	COIL(LEV)/XAP-5P RED	1	1	LEV-B (RED)	
9	T7W E80 242	COIL(LEV)/XAP-5P BLU	1	1	LEV-C (BLUE)	
10	T7W E76 242	COIL(LEV)/XAP-5P BLK		1	LEV-D (BLACK)	
11	T7W E77 242	COIL(LEV)/XAP-5P GRN		1	LEV-E (GREEN)	
12	T7W E66 202	THERMISTOR-A	1	1	TH-A (WHITE)	
13	T7W E67 202	THERMISTOR-B	1	1	TH-B (RED)	
14	T7W E68 202	THERMISTOR-C	1	1	TH-C (BLUE)	
15	T7W E69 202	THERMISTOR-D		1	TH-D (BLACK)	
16	T7W E70 202	THERMISTOR-E		1	TH-E (GREEN)	
17	T7W H18 392	LEAD WIRE SET	1	1		
18	R01 E14 239	FUSE 6.3 A 250 V	1	1	F1	6.3 A 250 V
19	R01 E21 239	FUSE 10 A 250 V	2	3	F2,F3, (F4)	10 A 250 V
20	R01 E09 660	PIPE COVER SET	1	1		STEM
21	R01 E08 660	PIPE COVER SET	1	1		BRANCH

2 OPTIONAL PARTS

2-1. FOR OUTDOOR UNIT

Parts name	Parts No.
DRAIN SOCKET*	PAC-SG61DS-E
AIR OUTLET GUIDE*1	PAC-SH96SG-E
DRAIN PAN*	PAC-SH97DP-E
2-BRANCH PIPE (Joint) (In case of using 2-branch boxes)*2	MSDD-50AR-E (flare)
	MSDD-50BR-E (brazing)
BASE HEATER	PAC-SJ20BH-E

* It cannot be used with a base heater.
*1 Need 2 pieces.
*2 Select a joint according to the connection method.

2-2. FOR BRANCH BOX

Different-diameter joint

Part No.	Connected pipes diameter	Diameter A	Diameter B
	mm	mm	mm
MAC-A454JP-E	ø9.52 → ø12.7	ø9.52	ø12.7
MAC-A455JP-E	ø12.7 → ø9.52	ø12.7	ø9.52
MAC-A456JP-E	ø12.7 → ø15.88	ø12.7	ø15.88
PAC-493PI	ø6.35 → ø9.52	ø6.35	ø9.52
PAC-SG76RJ-E	ø9.52 → ø15.88	ø9.52	ø15.88
PAC-SG75RJ-E	ø15.88 → ø19.05	ø15.88	ø19.05

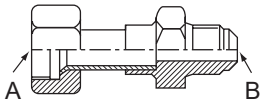

<Reference>
Conversion formula

1/4 inch	ø6.35 mm
3/8 inch	ø9.52 mm
1/2 inch	ø12.7 mm
5/8 inch	ø15.88 mm
3/4 inch	ø19.05 mm

MITSUBISHI ELECTRIC TRANE HVAC US LLC

HEAD OFFICE: 1340 SATELLITE BOULEVARD, SUWANEE, GA 30024, USA

©Copyright 2020 MITSUBISHI ELECTRIC CORPORATION

Issued: Jul. 2022 No. OCBA730 REVICED EDITION-B
Issued: Mar. 2020 No. OCBA730 REVISED EDITION-A
Published: Jan. 2020 No. OCBA730
Made in Japan

Specifications are subject to change without notice.