American Standard
HEATING & AIR CONDITIONING

MITSUBISHI ELECTRIC

SPLIT-TYPE, HEAT PUMP AIR CONDITIONERS

May 2019

No. OCBA573
REVISED EDITION-A

PARTS CATALOG

[Model Name]
<Outdoor unit>

NAXMPH36A142AA
NAXMPH42A152AA
NAXMPH48A182AA
NAXMMX48A182AA
NAXMMX60A182AA

<Branch box>

TAC-MKA51BC
TAC-MKA31BC

Revision:
- Some descriptions have been modified in REVISED EDITION-A.

OCBA573 is void.

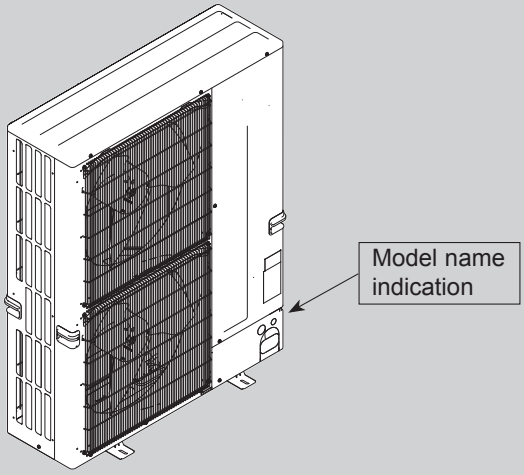

OUTDOOR UNIT: NAXMPH36A142AA

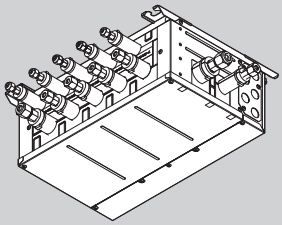

BRANCH BOX: TAC-MKA51BC

CONTENTS

1. SERVICE PARTS LIST.....2
2. OPTIONAL PARTS.....14

SERVICE MANUAL (OCHA573)

1 SERVICE PARTS LIST

1-1. OUTDOOR UNIT STRUCTURAL PARTS

NAXMPH36A142AA
NAXMPH42A152AA
NAXMPH48A182AA
NAXMMX48A182AA
NAXMMX60A182AA

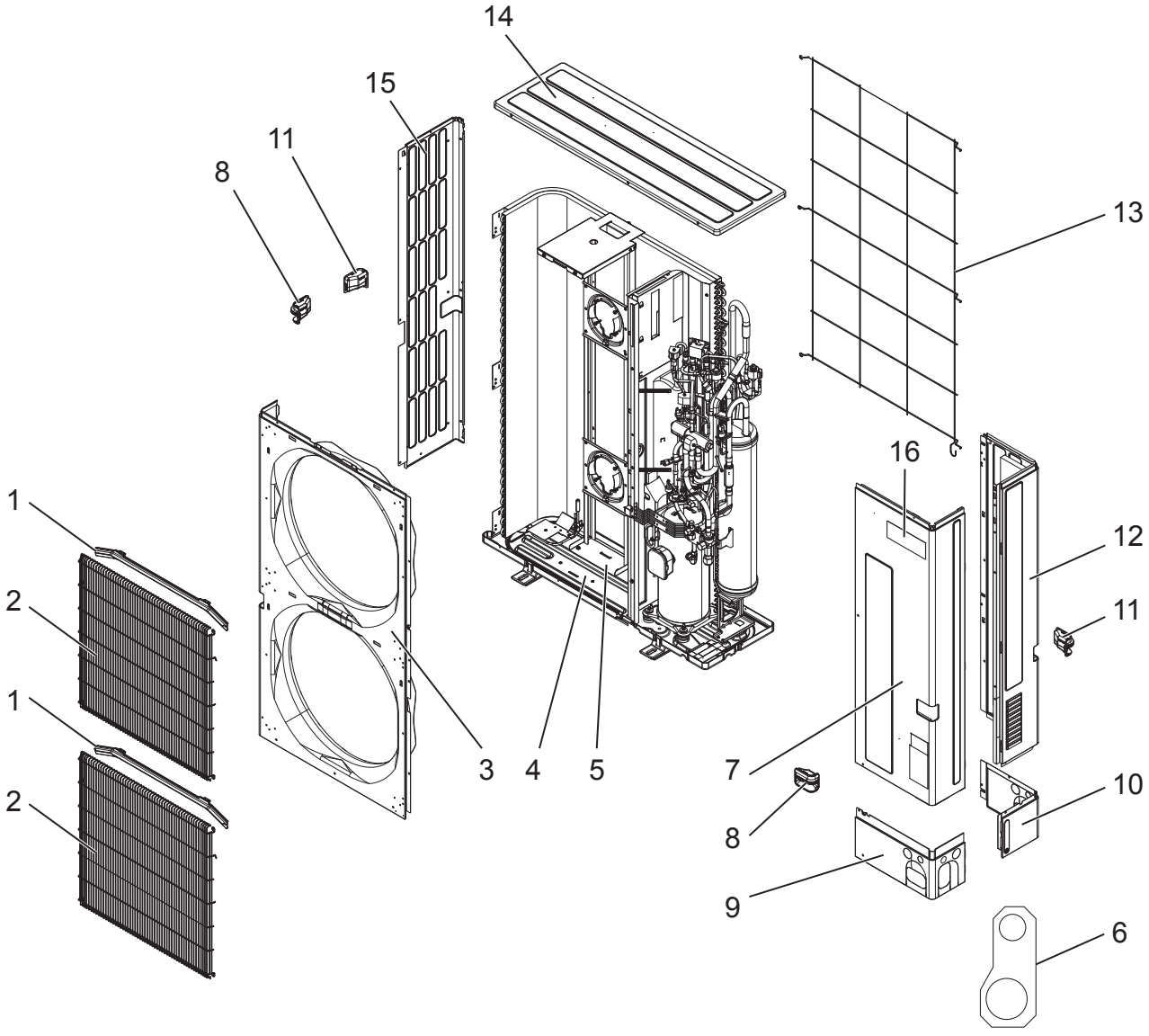

No.	Parts No.	Parts Name	Specification	Q'ty/unit					Remarks (Drawing No.)
				NAXMPH36A142AA	NAXMPH42A152AA	NAXMPH48A182AA	NAXMMX48A182AA	NAXMMX60A182AA	
1	R 0 1 E 0 2 6 3 1	ICE GUARD		2	2	2	2	2	
2	R 0 1 E 7 3 6 9 1	WIRE GRILLE		2	2	2	2	2	
3	R 0 1 E 2 3 6 6 8	FRONT PANEL		1	1	1	1	1	
4	R 0 1 E 5 3 6 8 6	BASE ASSY		1	1	1	1	1	
5	R 0 1 E 5 9 1 3 0	MOTOR SUPPORT		1	1	1	1		
	R 0 1 E 6 0 1 3 0	MOTOR SUPPORT						1	
6	T 7 W E 0 5 6 1 7	CONDUIT PLATE		1	1	1	1		
	T 7 W E 0 4 6 1 7	CONDUIT PLATE						1	
7	T 7 W E 2 0 6 6 8	SERVICE PANEL		1	1	1	1	1	
8	R 0 1 E 0 5 6 5 5	HANDLE (FRONT)		2	2	2	2	2	
9	R 0 1 E 3 5 6 5 8	COVER PANEL (FRONT)		1	1	1	1	1	
10	R 0 1 E 3 6 6 5 8	COVER PANEL (REAR)		1	1	1	1	1	
11	R 0 1 E 0 6 6 5 5	HANDLE (REAR)		2	2	2	2	2	
12	R 0 1 E 5 5 6 6 1	SIDE PANEL(R)		1	1	1	1		
	T 7 W E 3 6 6 6 1	SIDE PANEL(R)						1	
13	R 0 1 E 1 0 6 9 8	REAR GUARD		1	1	1	1	1	
14	R 0 1 E 3 6 6 4 1	TOP PANEL		1	1	1	1	1	
15	R 0 1 E 3 0 6 6 2	SIDE PANEL (L)		1	1	1	1	1	
16	T 7 W A 2 1 0 0 5	BRAND LABEL (ME)		1	1	1	1	1	

1-2. OUTDOOR UNIT FUNCTIONAL AND ELECTRICAL PARTS
NAXMPH36A142AA
NAXMPH42A152AA
NAXMPH48A182AA

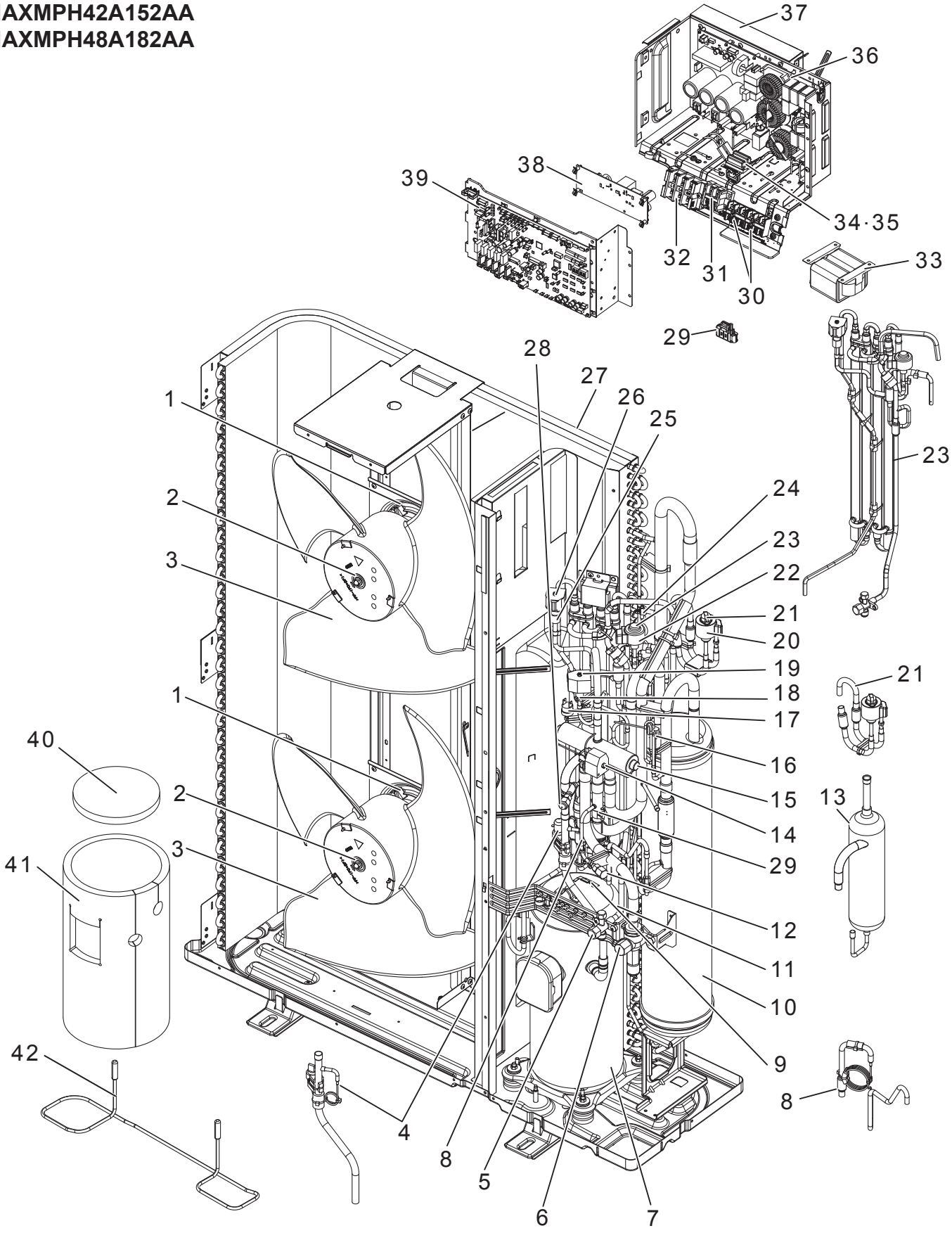

Parts numbers that are circled are not shown in the figure.

No.	Parts No.	Parts Name	Specification	Q'ty/unit			Remarks (Drawing No.)	Wiring Diagram Symbol
				NAXMPH36A142AA	NAXMPH42A152AA	NAXMPH48A182AA		
1	T7W A10 221	FAN MOTOR		2	2	2		MF1, MF2
2	R01 E09 097	NUT		2	2	2		
3	R01 E16 115	PROPELLER FAN		2	2	2		
4	R01 E12 208	HIGH PRESSURE SENSOR ASSY		1	1	1		63HS
5	T7W E04 410	STOP VALVE 3/8F	3/8	1	1	1		
6	T7W E06 411	BALL VALVE 5/8F	5/8	1	1	1		
7	T97 443 077	COMPRESSOR	ANB33FJSMT	1	1	1	Includes RUBBERMOUNT	MC
8	R01 E00 426	CT ASSY		1	1	1		
9	R01 E36 201	THERMISTOR	Compressor	1	1	1		TH4
10	R01 E73 440	ACCUMULATOR		1	1	1		
11	R01 H97 202	THERMISTOR	Hic Pipe	1	1	1		TH2
12	R01 E12 413	CHARGE PLUG		1	1	1		
13	R01 E15 490	OIL SEPARATOR		1	1	1		
14	T7W E70 242	SOLENOID COIL		1	1	1		21S4
15	R01 E40 403	4-WAY VALVE		1	1	1		
16	R01 E04 209	LOW PRESSURE SENSOR		1	1	1		63LS
17	T7W E15 208	HIGH PRESSURE SWITCH		1	1	1		63H
18	T7W E03 428	SOLENOID VALVE	Bypass Valve(SV1)	1	1	1		
19	T7W E71 242	SOLENOID COIL		1	1	1	CONNECTOR: GRAY	SV1
20	R01 H21 242	LEV COIL	UKV type	1	1	1	CONNECTOR: WHITE	LEV-A
21	R01 H63 401	LEV-A ASSY		1	1	1	Includes LEV COIL	
22	R01 H36 242	LEV COIL	CAM type	1	1	1	CONNECTOR: RED	LEV-B
23	T7W E93 401	LEV ASSY HIC		1	1	1	Includes LEV COIL and STOP VALVE	
24	R01 H87 202	THERMISTOR	Outdoor Liquid Pipe	1	1	1		TH3
25	R01 E16 428	SOLENOID VALVE	Bypass Valve(SV2)	1	1	1		
26	T7W E72 242	SOLENOID COIL		1	1	1	CONNECTOR: BLUE	SV2
27	T7W E74 408	HEAT EXCHANGER		1	1	1		
28	T7W E13 413	CHARGE PLUG		1	1	1		
29	R01 H99 202	THERMISTOR	Suction Pipe, Ambient	1	1	1	Combined Port	TH6, TH7
30	R01 E27 246	TERMINAL BLOCK	3P (M1, M2, S)	2	2	2		TB3, TB7
31	T7W E57 716	TERMINAL BLOCK	2P (B1, B2)	1	1	1		TB1B
32	T7W 603 246	TERMINAL BLOCK	3P (L1, L2, GR)	1	1	1		TB1
33	T7W E23 259	REACTOR		1	1	1		DCL
34	R01 E20 239	FUSE	20A 250V	2	2	2		FUSE1,FUSE2
35	R01 30L 241	FUSE HOLDER		2	2	2		
36	T7W AU0 323	POWER CIRCUIT BOARD		1	1	1		P.B.
37	R01 A10 371	HEAT SINK		1	1	1		
38	R01 E06 311	M-NET POWER CIRCUIT BOARD		1	1	1		M-NET P.B.
39	R01 AX7 350	MULTI CONTROLLER CIRCUIT BOARD		1	1	1		MULTI.B.
40	R01 A57 602	COMP FELT(TOP)		1	1	1		
41	R01 A70 602	COMP FELT (BODY)		1	1	1		
42	T7W B02 300	BASE HEATER		1	1	1		BH
43	R01 E45 510	LEAD ASSY COMP		1	1	1		
44	R01 E14 239	FUSE	6.3A 250V	2	2	2		F1, F2

1-2. OUTDOOR UNIT FUNCTIONAL AND ELECTRICAL PARTS
NAXMMX48A182AA

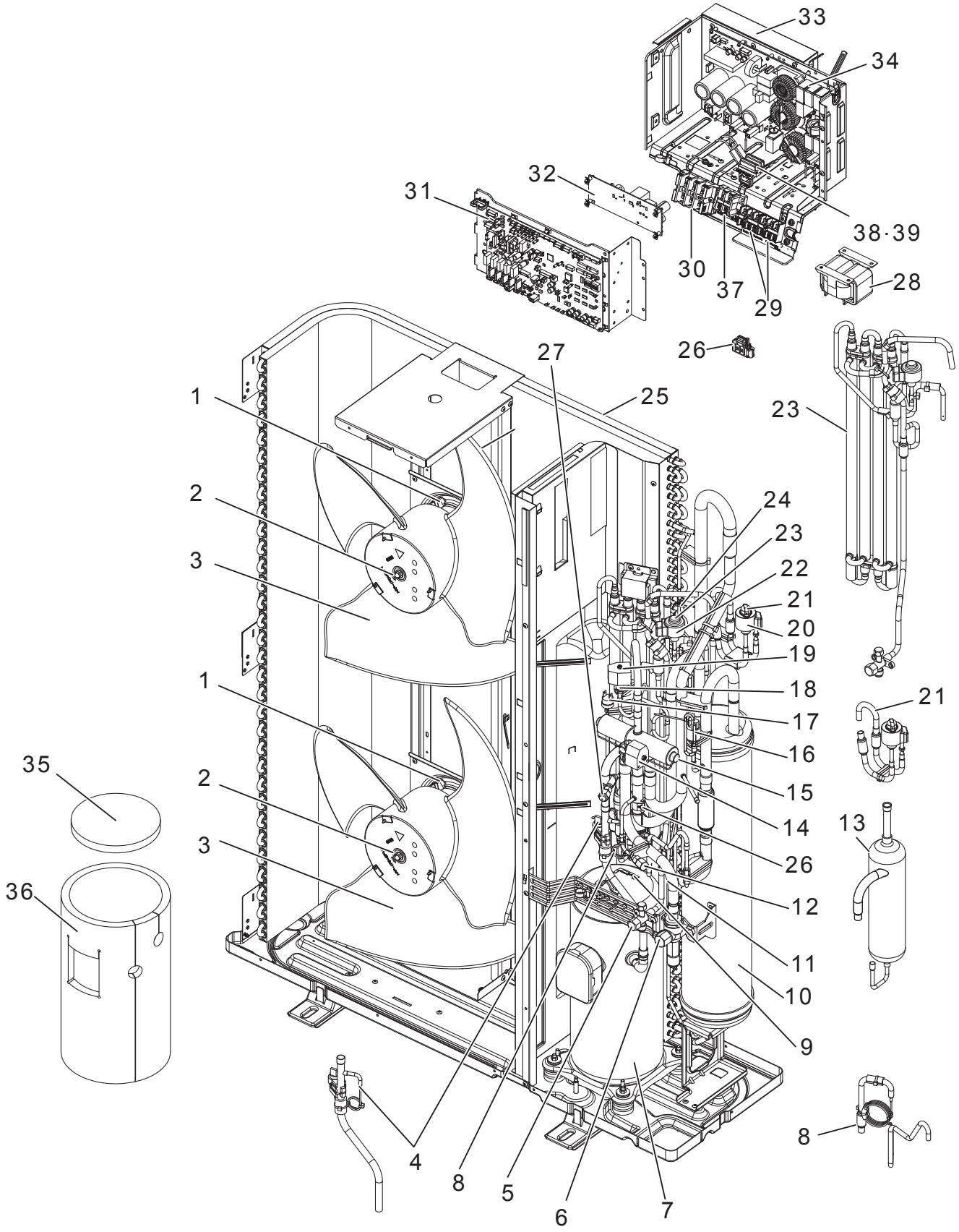

Parts numbers that are circled are not shown in the figure.

No.	Parts No.	Parts Name	Specification	Q'ty/unit NAXMMX48A182AA	Remarks (Drawing No.)	Wiring Diagram Symbol
1	T7W A10 221	FAN MOTOR		2		MF1, MF2
2	R01 E09 097	NUT		2		
3	R01 E16 115	PROPELLER FAN		2		
4	R01 E12 208	HIGH PRESSURE SENSOR ASSY		1		63HS
5	T7W E04 410	STOP VALVE 3/8F	3/8	1		
6	T7W E06 411	BALL VALVE 5/8F	5/8	1		
7	T97 435 077	COMPRESSOR	ANB33FNHMT	1	Includes RUBBERMOUNT	MC
8	R01 E00 426	CT ASSY		1		
9	R01 E36 201	THERMISTOR	Compressor	1		TH4
10	R01 E73 440	ACCUMULATOR		1		
11	R01 H97 202	THERMISTOR	Hic Pipe	1		TH2
12	R01 E12 413	CHARGE PLUG		1		
13	R01 E15 490	OIL SEPARATOR		1		
14	T7W E70 242	SOLENOID COIL		1		21S4
15	R01 E40 403	4-WAY VALVE		1		
16	R01 E04 209	LOW PRESSURE SENSOR		1		63LS
17	T7W E15 208	HIGH PRESSURE SWITCH		1		63H
18	T7W E03 428	SOLENOID VALVE	Bypass Valve(SV1)	1		
19	T7W E71 242	SOLENOID COIL		1	CONNECTOR: GRAY	SV1
20	R01 H21 242	LEV COIL	UKV type	1	CONNECTOR: WHITE	LEV-A
21	R01 H63 401	LEV-A ASSY		1	Includes LEV COIL	
22	R01 H36 242	LEV COIL	CAM type	1	CONNECTOR: RED	LEV-B
23	T7W E80 401	LEV-B ASSY		1	Includes LEV COIL and STOP VALVE	
24	R01 H87 202	THERMISTOR	Outdoor Liquid Pipe	1		TH3
25	T7W E74 408	HEAT EXCHANGER		1		
26	R01 H99 202	THERMISTOR	Suction Pipe, Ambient	1	Combined Port	TH6, TH7
27	T7W E13 413	CHARGE PLUG		1		
28	R01 E51 259	REACTOR		1		DCL
29	R01 E27 246	TERMINAL BLOCK	3P (M1, M2, S)	2		TB3, TB7
30	T7W 603 246	TERMINAL BLOCK	3P (L1, L2, GR)	1		TB1
31	R01 AX7 350	MULTI CONTROLLER CIRCUIT BOARD		1		MULTI.B.
32	R01 E06 311	M-NET POWER CIRCUIT BOARD		1		M-NET P.B.
33	R01 A10 371	HEAT SINK		1		
34	T7W AX0 323	POWER CIRCUIT BOARD		1		P.B.
35	R01 A57 602	COMP FELT(TOP)		1		
36	R01 A71 602	COMP FELT (BODY)		1		
37	T7W E57 716	TERMINAL BLOCK	2P (B1, B2)	1		TB1B
38	R01 E20 239	FUSE	20A 250V	2		FUSE1,FUSE2
39	R01 30L 241	FUSE HOLDER		2		
40	R01 E45 510	LEAD ASSY COMP		1		
41	R01 E14 239	FUSE	6.3A 250V	2		F1, F2

1-2. OUTDOOR UNIT FUNCTIONAL AND ELECTRICAL PARTS
NAXMMX60A182AA

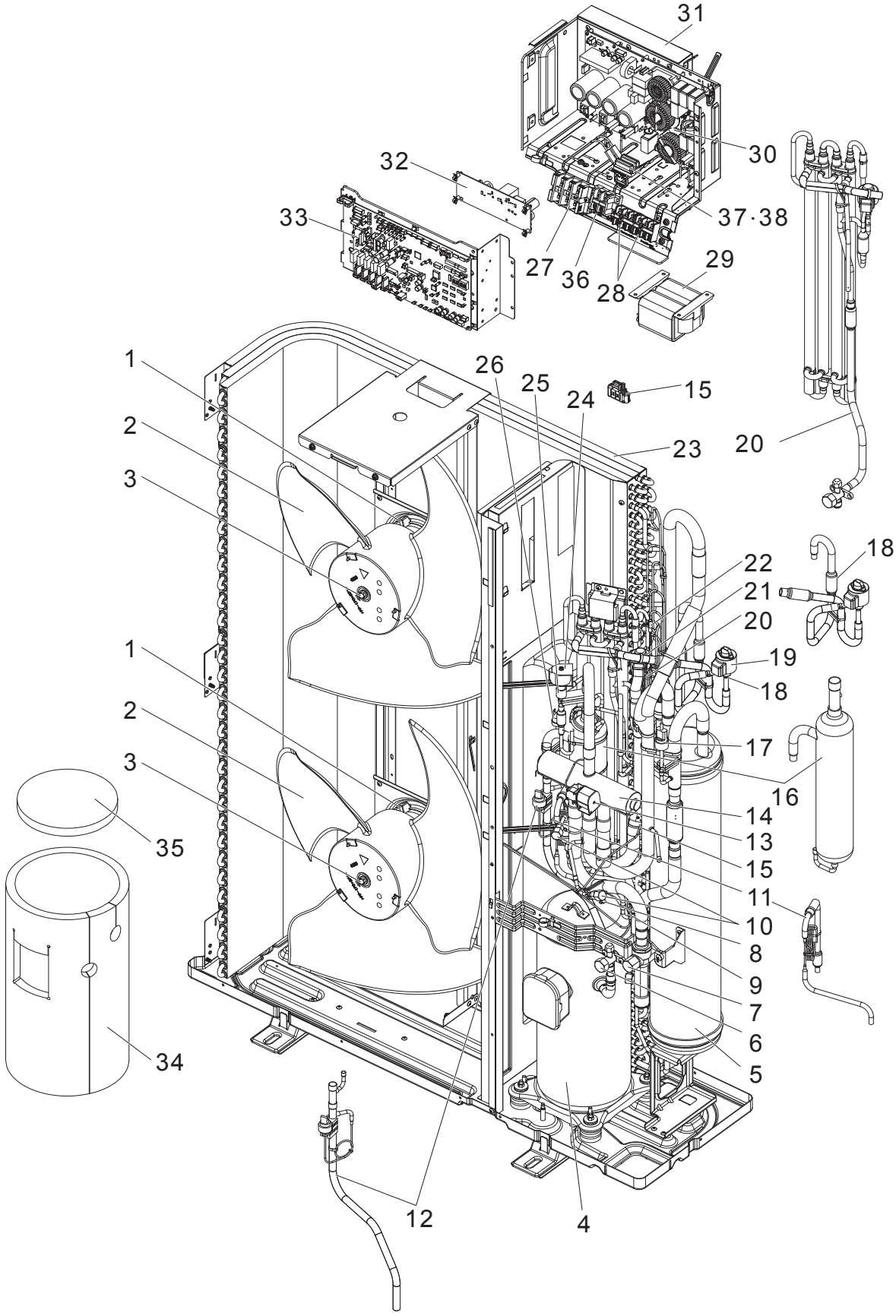

Parts numbers that are circled are not shown in the figure.

No.	Part No.	Part Name	Specification	Q'ty/unit NAXMMX60A182AA	Remarks (Drawing No.)	Wiring Diagram Symbol
1	T7W A12 221	FAN MOTOR		2		MF1, 2
2	R01 E16 115	PROPELLER FAN		2		
3	R01 E09 097	NUT		2		
4	T97 415 789	COMPRESSOR	ANB66FFZMT	1	Includes RUBBER MOUNT	MC
5	R01 E67 440	ACCUMULATOR		1		
6	T7W E04 410	STOP VALVE 3/8F	3/8 (LIQUID)	1		
7	T7W E07 411	BALL VALVE&STRAINER	3/4 (GAS)	1		
8	R01 E36 201	THERMISTOR	Compressor	1		TH4
9	R01 H97 202	THERMISTOR	Hic Pipe	1		TH2
10	R01 E12 413	CHARGE PLUG		2		
11	T7W A03 426	CT ASSY	ø2.5×ø0.8×800mm	1		
12	T7W E12 208	HIGH PRESSURE SENSOR ASSY		1		63HS
13	T7W F00 242	SOLENOID COIL (4-WAY VALVE)		1		21S4
14	T7W E09 403	4-WAY VALVE		1		
15	R01 H99 202	THERMISTOR	Suction Pipe, Ambient	1	Combined Port	TH6, TH7
16	R01 E14 490	OIL SEPARATOR		1		
17	R01 E04 209	LOW PRESSURE SENSOR		1		63LS
18	T7W E61 401	LEV-A ASSY		1	Includes LEV COIL	
19	R01 H39 242	LEV COIL	UKV type	1	CONNECTOR: WHITE	LEV-A
20	T7W E81 401	LEV-B ASSY		1	Includes LEV COIL and STOP VALVE	
21	R01 H32 242	LEV COIL	CAM type	1	CONNECTOR: RED	LEV-B
22	R01 H87 202	THERMISTOR	Outdoor Liquid Pipe	1		TH3
23	T7W E82 408	HEAT EXCHANGER		1		
24	T7W E91 242	SOLENOID COIL		1	CONNECTOR: GRAY	SV1
25	T7W A04 426	SV-CT ASSY	Bypass Valve (SV1)	1		
26	T7W E15 208	HIGH PRESSURE SWITCH		1		63H
27	T7W 603 246	TERMINAL BLOCK	3P (L1, L2, GR)	1		TB1
28	R01 E27 246	TERMINAL BLOCK	3P (M1, M2, S)	2		TB3,TB7
29	T7W E23 259	REACTOR		1		DCL
30	T7W AY0 323	POWER CIRCUIT BOARD		1		P.B.
31	R01 A10 371	HEAT SINK		1		
32	R01 E06 311	M-NET POWER BOARD		1		M-NET P.B.
33	T7W GG3 315	MULTI CONTROLLER CIRCUIT BOARD		1		MULTI.B
34	R01 A71 602	COMP FELT (BODY)		1		
35	R01 A57 602	COMP FELT (TOP)		1		
36	T7W E57 716	TERMINAL BLOCK	2P (B1, B2)	1		TB1B
37	R01 E20 239	FUSE	20A 250V	2		FUSE1,FUSE2
38	R01 30L 241	FUSE HOLDER		2		
39	T7W A05 510	LEAD ASSY COMP		1		
40	R01 E14 239	FUSE	6.3A 250V	2		F1, F2

1-3. BRANCH BOX FUNCTIONAL PARTS
TAC-MKA51BC

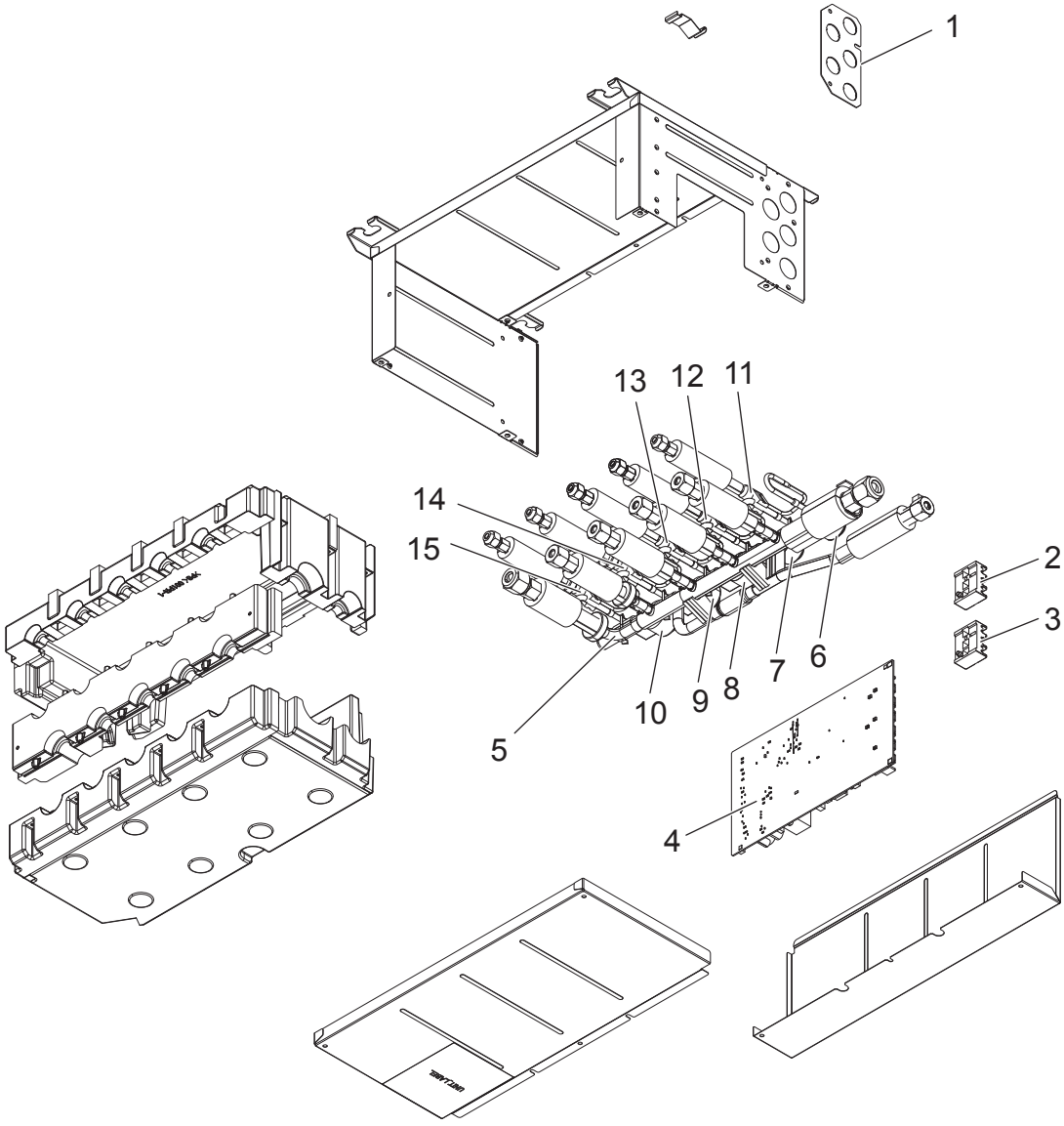

Parts numbers that are circled are not shown in the figure.

No.	Parts No.	Parts Name	Specification	Q'ty/unit TAC-MKA51BC	Remarks (Drawing No.)	Wiring Diagram Symbol
1	T7W E06 617	CONDUIT PLATE		1		
2	T7W E59 716	TERMINAL BLOCK	2P(L1, L2)	1		TB2B
3	T7W E60 716	TERMINAL BLOCK	3P(M1, M2, S)	1		TB5
4	T7W F18 310	CONTROLLER BOARD		1		B.C.
5	T7W E55 401	LEV ASSY MKA50BC		1		Includes coils
6	T7W E73 242	COIL(LEV)		1	WHITE	LEV-A
7	T7W E74 242	COIL(LEV)		1	RED	LEV-B
8	T7W E75 242	COIL(LEV)		1	BLUE	LEV-C
9	T7W E76 242	COIL(LEV)		1	BLACK	LEV-D
10	T7W E77 242	COIL(LEV)		1	GREEN	LEV-E
11	T7W E66 202	THERMISTOR-A		1	WHITE	TH-A
12	T7W E67 202	THERMISTOR-B		1	RED	TH-B
13	T7W E68 202	THERMISTOR-C		1	BLUE	TH-C
14	T7W E69 202	THERMISTOR-D		1	BLACK	TH-D
15	T7W E70 202	THERMISTOR-E		1	GREEN	TH-E
16	T7W A00 392	LEAD WIRE SET		1		
17	R01 E14 239	FUSE	6.3A 250V	1		F1
18	R01 E21 239	FUSE	10A 250V	3		F2,F3,F4
19	R01 E07 660	STEM PIPE COVER SET		1		
20	R01 E08 660	BRANCH PIPE COVER SET		1		

1-4. BRANCH BOX FUNCTIONAL PARTS
TAC-MKA31BC

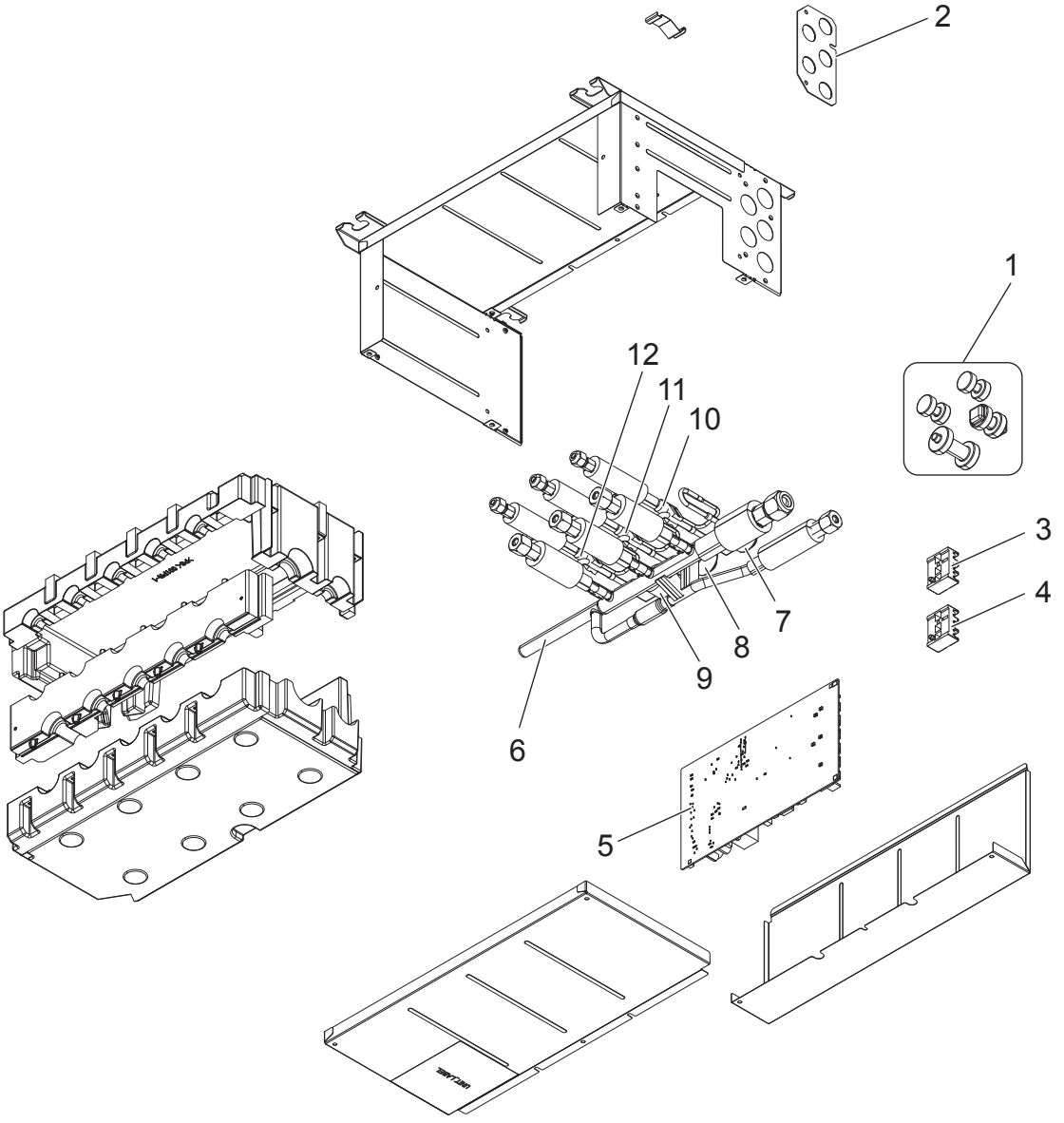

Parts numbers that are circled are not shown in the figure.

No.	Parts No.	Parts Name	Specification	Q'ty/unit TAC-MKA31BC	Remarks (Drawing No.)	Wiring Diagram Symbol
1	R01 E04 124	BUSH SET		1		
2	T7W E06 617	CONDUIT PLATE		1		
3	T7W E59 716	TERMINAL BLOCK	2P(L1, L2)	1		TB2B
4	T7W E60 716	TERMINAL BLOCK	3P(M1, M2, S)	1		TB5
5	T7W F17 310	CONTROLLER BOARD		1		B.C.
6	T7W E54 401	LEV ASSY MKA30BC		1		Includes coils
7	T7W E73 242	COIL(LEV)		1	WHITE	LEV-A
8	T7W E74 242	COIL(LEV)		1	RED	LEV-B
9	T7W E75 242	COIL(LEV)		1	BLUE	LEV-C
10	T7W E66 202	THERMISTOR-A		1	WHITE	TH-A
11	T7W E67 202	THERMISTOR-B		1	RED	TH-B
12	T7W E68 202	THERMISTOR-C		1	BLUE	TH-C
13	T7W A00 392	LEAD WIRE SET		1		
14	R01 E14 239	FUSE	6.3A 250V	1		F1
15	R01 E21 239	FUSE	10A 250V	2		F2,F3
16	R01 E07 660	STEM PIPE COVER SET		1		
17	R01 E08 660	BRANCH PIPE COVER SET		1		

2 OPTIONAL PARTS

2-1. FOR OUTDOOR UNIT

DRAIN SOCKET (For NAXMMXA182AA)** *It can not be used with a base heater.

Parts No.	PAC-SG61DS-E

AIR OUTLET GUIDE

Parts No.	PAC-ADG096AA-E

Note: Need 2 pieces.

DRAIN PAN (For NAXMMXA182AA)** *It can not be used with a base heater.

Parts No.	PAC-SH97DP-E

2-BRANCH PIPE (Joint) (In case of using 2-branch boxes)

Parts No.	Connection method
MSDD-50AR-E	flare
MSDD-50BR-E	brazing

Note: Select a joint according to the connection method.

BASE HEATER (For NAXMMXA182AA)**

Parts No.	PAC-SJ20BH-E

2-2. FOR BRANCH BOX

Different-diameter joint

Part No.	Connected pipes diameter mm	Diameter A mm	Diameter B mm
MAC-A454JP-E	ø9.52 → ø12.7	ø9.52	ø12.7
MAC-A455JP-E	ø12.7 → ø9.52	ø12.7	ø9.52
MAC-A456JP-E	ø12.7 → ø15.88	ø12.7	ø15.88
PAC-493PI	ø6.35 → ø9.52	ø6.35	ø9.52
PAC-SG76RJ-E	ø9.52 → ø15.88	ø9.52	ø15.88
PAC-SG75RJ-E	ø15.88 → ø19.05	ø15.88	ø19.05

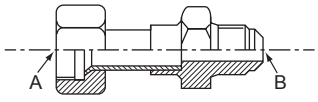

<Reference>
Conversion formula

1/4 inch	ø6.35 mm
3/8 inch	ø9.52 mm
1/2 inch	ø12.7 mm
5/8 inch	ø15.88 mm
3/4 inch	ø19.05 mm

MITSUBISHI ELECTRIC TRANE HVAC US LLC

HEAD OFFICE: 1340 SATELLITE BOULEVARD, SUWANEE, GA 30024, USA

©Copyright 2018 MITSUBISHI ELECTRIC CORPORATION

Issued: May 2019 No. OCBA573 REVISED EDITION-A
Published: Oct. 2018 No. OCBA573
Made in Japan

Specifications are subject to change without notice.