American Standard®
HEATING & AIR CONDITIONING

MITSUBISHI ELECTRIC

Air Conditioners

NAXAMT12, 18, 24, 30, 36A112AA

SERVICE MANUAL

Table of Contents

1. SAFETY PRECAUTION 4
    1.1. Always observe for safety 4
    1.2. Cautions related to new refrigerant 4
2. PART NAMES AND FUNCTIONS 7
3. SPECIFICATION 8
4. FAN PERFORMANCE AND CORRECTED AIRFLOW 10
    4.1. NAXAMT12A112AA 10
    4.2. NAXAMT18A112AA 12
    4.3. NAXAMT24A112AA 14
    4.4. NAXAMT30A112AA 16
    4.5. NAXAMT36A112AA 18
5. SOUND PRESSURE LEVELS 20
    5.1. Sound pressure level 20
    5.2. NC Curves 21
        5.2.1. NAXAMT12A112AA 21
        5.2.2. NAXAMT18A112AA 22
        5.2.3. NAXAMT24A112AA 23
        5.2.4. NAXAMT30A112AA 24
        5.2.5. NAXAMT36A112AA 25
        5.2.6. Air Filter 26
6. OUTLINES & DIMENSIONS 27
7. WIRING DIAGRAM 28
8. REFRIGERANT SYSTEM DIAGRAM 29
9. HEATER CONTROL 30
    9.1. Control Specifications And Function Setting 30
    9.2. Fan control 33
    9.3. CN24RELAY-KIT-CM3 (Optional Parts) installation 34
10. HUMIDIFIER CONTROL SPECIFICATIONS 36
    10.1. Humidistat Control 36
    10.2. Installation 37
11. ERV CONTROL SPECIFICATIONS 38
    11.1. ERV Control 38
    11.2. Installation 39
12. TROUBLESHOOTING 40
    12.1. Cautions on troubleshooting 40
    12.2. Self-check function, Function Table 41
    12.3. Self-diagnosis action table 45
    12.4. Troubleshooting by inferior phenomena 50
    12.5. Test point diagram 51
        12.5.1. Power supply board 51
        12.5.2. Indoor controller board 52
    12.6. Trouble criterion of main parts 53
    12.7. Thermistor 54
    12.8. DC Fan motor (FAN MOTOR/INDOOR CONTROLLER BOARD) 55
    12.9. Functions of DIP switch and jumper wire 56
13. DISASSEMBLY PROCEDURE 57
    13.1. Control box 57
    13.2. Thermistor (Return Air) 58
    13.3. Coil Assembly 59

 © 2022 Mitsubishi Electric Trane HVAC US LLC. All rights reserved.

13.4. Blower/Fan Assembly 62

 © 2022 Mitsubishi Electric Trane HVAC US LLC. All rights reserved.

1. SAFETY PRECAUTION

1.1. Always observe for safety

Before obtaining access to terminal, all supply circuits must be disconnected.

1.2. Cautions related to new refrigerant

Cautions for units utilizing refrigerant R410A

Recommend using new refrigerant pipes.
In case of using the existing pipes for R22, recommend flushing the line using existing copper. • Change flare nut to the one provided with this product. Use a newly flared pipe. • Avoid using ASTM B280 Standard for copper and copper alloy seamless pipes and tube.

Make sure that the inside and outside of refrigerant piping is clean and it has no contamination such as sulfur hazardous for use, oxides, dirt, shaving particles, etc. In addition, use pipes with specified thickness.
Contamination inside refrigerant piping can cause deterioration of refrigerant oil etc.

Store the piping to be used indoors during installation and both ends of the piping sealed until just before brazing. (Leave elbow joints, etc. in their packaging.)
If dirt, dust or moisture enters into refrigerant cycle, that can cause deterioration of refrigerant oil or malfunction of compressor.

Use ester oil, ether oil or alkylbenzene oil (small amount) as the refrigerant oil applied to flares and flange connections.
If large amount of mineral oil enters, that can cause deterioration of refrigerant oil etc.

Charge refrigerant from liquid phase of gas cylinder.
If the refrigerant is charged from gas phase, composition change may occur in refrigerant and the efficiency will be lowered.

Do not use refrigerant other than R410A.
If other refrigerant (R22 etc.) is used, chlorine in refrigerant can cause deterioration of refrigerant oil etc.

Use a vacuum pump with a reverse flow check valve.
Vacuum pump oil may flow back into refrigerant cycle and that can cause deterioration of refrigerant oil etc.

 © 2022 Mitsubishi Electric Trane HVAC US LLC. All rights reserved.

Use the following tools specifically designed for use with R410A refrigerant.
The following tools are necessary to use R410A refrigerant.

Tools for R410A	
Gauge manifold	Flare tool
Charge hose	Size adjustment gauge
Gas leak detector	Vacuum pump adaptor
Torque wrench	Electronic refrigerant charging scale

Handle tools with care.
If dirt, dust or moisture enters into refrigerant cycle, that can cause deterioration of refrigerant oil or malfunction of compressor.

Ventilate the room if refrigerant leaks during operation. If refrigerant comes into contact with a flame, poisonous gases will be released.

[1] Cautions for service

1. Perform service after recovering the refrigerant left in unit completely.
2. Do not release refrigerant in the air.
3. After completing service, charge the cycle with specified amount of refrigerant.
4. When performing service, install a filter drier simultaneously. Be sure to use a filter drier for new refrigerant.

[2] Additional refrigerant charge

When charging directly from cylinder

- Check that cylinder for R410A on the market is syphon type.
- Charging should be performed with the cylinder of syphon stood vertically. (Refrigerant is charged from liquid phase.)

 © 2022 Mitsubishi Electric Trane HVAC US LLC. All rights reserved.

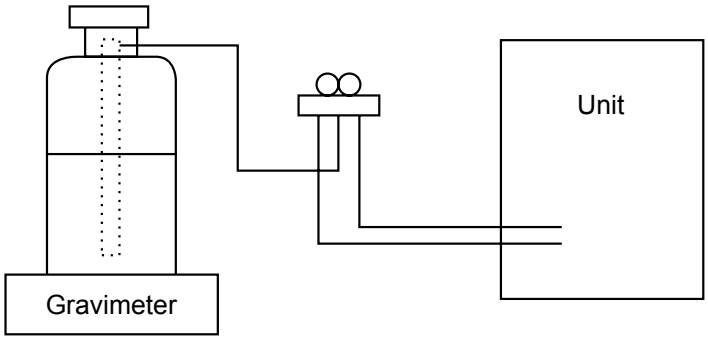

[3] Service tools

Use the below service tools as exclusive tools for R410A refrigerant.

No.	Tool name	Specifications
①	Gauge manifold	Specifications • Only for R410A • Use the existing fitting specifications. (UNF1/2) • Use high-tension side pressure of 5.3MPa·G or over.
②	Charge hose	• Only for R410A • Use pressure performance of 5.09MPa·G or over.
③	Electronic scale	-
④	Gas leak detector	• Use the detector for R134a, R407C or R410A.
⑤	Adaptor for reverse flow check	• Attach on vacuum pump.
⑥	Refrigerant charge base	-
⑦	Refrigerant cylinder	• Only for R410A • Top of cylinder (Pink) • Cylinder with syphon
⑧	Refrigerant recovery equipment	-

 © 2022 Mitsubishi Electric Trane HVAC US LLC. All rights reserved.

2. PART NAMES AND FUNCTIONS

- Indoor Unit

(1) Vertical

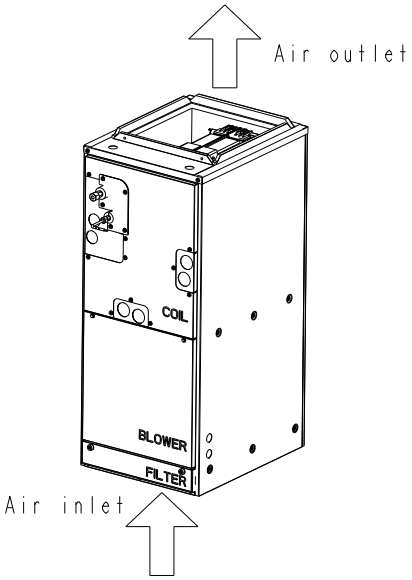

(2) Horizontal Right

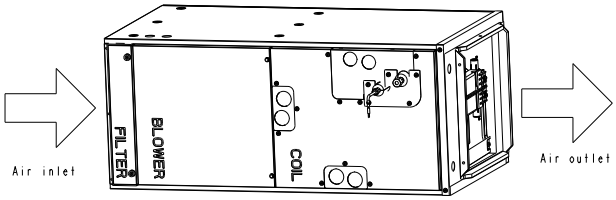

(3) Horizontal Left

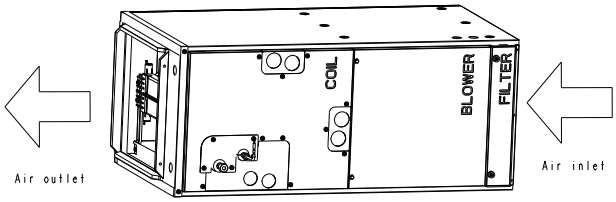

NOTE
For downflow installations, please see downflow kit manuals.

 © 2022 Mitsubishi Electric Trane HVAC US LLC. All rights reserved.

3. SPECIFICATION

INDOOR UNIT	Service Ref.			**12A112AA**
	Power supply (phase, cycle, voltage)			1 phase, 60Hz, 208/230V
		Max. Fuse Size	A	15
		Min. Circuit Ampacity	A	3.00
	External finish			Black galvanized steel cabinet
	Heat exchanger			Plate fin coil
	Fan	Fan (drive) x No.		Sirocco fan x 1
		Fan motor output	kW	0.100
		Fan motor	F.L.A	2.4
		Airflow (Low-Mid-High)	m^3/min (CFM)	7.9-10.8-12.7 (278-381-448)
		External static pressure	Pa (in.WG)	75-125-200 (0.30-0.50-0.80)
	Operation control & Thermostat			Remote controller & built-in
	Sound pressure level (Low-Mid-High)	125 Pa (0.50 in.WG)	dB (A)	29-36-39
	Drain pipe		mm (in.)	19.05 (3/4) FPT
	Dimensions	W	mm (in.)	432 (17)
		D	mm (in.)	548 (21-5/8)
		H	mm (in.)	1011 (39-13/16)
	Weight		kg (lbs)	42 (93)

INDOOR UNIT	Service Ref.			**18A112AA**
	Power supply (phase, cycle, voltage)			1 phase, 60Hz, 208/230V
		Max. Fuse Size	A	15
		Min. Circuit Ampacity	A	3.00
	External finish			Black galvanized steel cabinet
	Heat exchanger			Plate fin coil
	Fan	Fan (drive) x No.		Sirocco fan x 1
		Fan motor output	kW	0.160
		Fan motor	F.L.A	2.4
		Airflow (Low-Mid-High)	m^3/min (CFM)	13.3-16.2-19.1 (471-573-675)
		External static pressure	Pa (in.WG)	75-125-200 (0.30-0.50-0.80)
	Operation control & Thermostat			Remote controller & built-in
	Sound pressure level (Low-Mid-High)	125 Pa (0.50 in.WG)	dB (A)	33-36-41
	Drain pipe		mm (in.)	19.05 (3/4) FPT
	Dimensions	W	mm (in.)	432 (17)
		D	mm (in.)	548 (21-5/8)
		H	mm (in.)	1011 (39-13/16)
	Weight		kg (lbs)	42 (93)

 © 2022 Mitsubishi Electric Trane HVAC US LLC. All rights reserved.

INDOOR UNIT	Service Ref.			**24A112AA**
	Power supply (phase, cycle, voltage)			1 phase, 60Hz, 208/230V
		Max. Fuse Size	A	15
		Min. Circuit Ampacity	A	3.00
	External finish			Black galvanized steel cabinet
	Heat exchanger			Plate fin coil
	Fan	Fan (drive) x No.		Sirocco fan x 1
		Fan motor output	kW	0.100
		Fan motor	F.L.A	2.4
		Airflow (Low-Mid-High)	m³/min (CFM)	14.6-17.7-20.8 (515-625-735)
		External static pressure	Pa (in.WG)	75-125-200 (0.30-0.50-0.80)
	Operation control & Thermostat			Remote controller & built-in
	Sound pressure level (Low-Mid-High)	125 Pa (0.50 in.WG)	dB (A)	33-36-41
	Drain pipe		mm (in.)	19.05 (3/4) FPT
	Dimensions	W	mm (in.)	432 (17)
		D	mm (in.)	548 (21-5/8)
		H	mm (in.)	1011 (39-13/16)
	Weight		kg (lbs)	42 (93)

INDOOR UNIT	Service Ref.			**30A112AA**
	Power supply (phase, cycle, voltage)			1 phase, 60Hz, 208/230V
		Max. Fuse Size	A	15
		Min. Circuit Ampacity	A	4.13
	External finish			Black galvanized steel cabinet
	Heat exchanger			Plate fin coil
	Fan	Fan (drive) x No.		Sirocco fan x 1
		Fan motor output	kW	0.244
		Fan motor	F.L.A	3.3
		Airflow (Low-Mid-High)	m³/min (CFM)	17.3-21.1-24.8 (613-744-875)
		External static pressure	Pa (in.WG)	75-125-200 (0.30-0.50-0.80)
	Operation control & Thermostat			Remote controller & built-in
	Sound pressure level (Low-Mid-High)	125 Pa (0.50 in.WG)	dB (A)	32-37-41
	Drain pipe		mm (in.)	19.05 (3/4) FPT
	Dimensions	W	mm (in.)	534 (21)
		D	mm (in.)	548 (21-5/8)
		H	mm (in.)	1113.8 (43-7/8)
	Weight		kg (lbs)	54 (119)

INDOOR UNIT	Service Ref.			**36A112AA**
	Power supply (phase, cycle, voltage)			1 phase, 60Hz, 208/230V
		Max. Fuse Size	A	15
		Min. Circuit Ampacity	A	4.13
	External finish			Black galvanized steel cabinet
	Heat exchanger			Plate fin coil
	Fan	Fan (drive) x No.		Sirocco fan x 1
		Fan motor output	kW	0.244
		Fan motor	F.L.A	3.3
		Airflow (Low-Mid-High)	m³/min (CFM)	21.7-25.7-25.7 (767-910-910)
		External static pressure	Pa (in.WG)	75-125-200 (0.30-0.50-0.80)
	Operation control & Thermostat			Remote controller & built-in
	Sound pressure level (Low-Mid-High)	125Pa (0.50 in.WG)	dB (A)	35-40-42
	Drain pipe		mm (in.)	19.05 (3/4) FPT
	Dimensions	W	mm (in.)	534 (21)
		D	mm (in.)	548 (21-5/8)
		H	mm (in.)	1113.8 (43-7/8)
	Weight		kg (lbs)	54 (119)

 © 2022 Mitsubishi Electric Trane HVAC US LLC. All rights reserved.

4. FAN PERFORMANCE AND CORRECTED AIRFLOW

4.1. NAXAMT12A112AA

Vertical, Horizontal Right, Horizontal Left

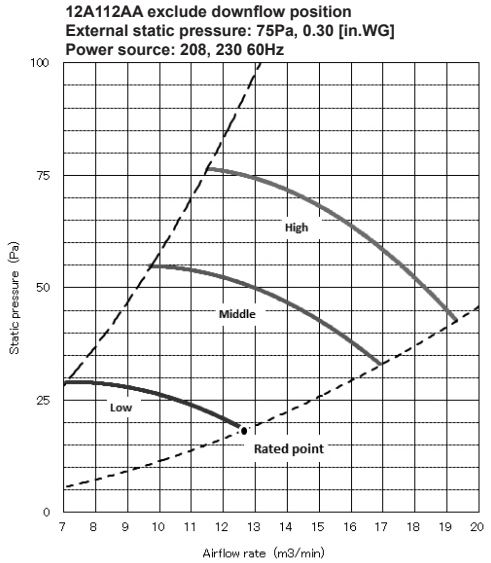

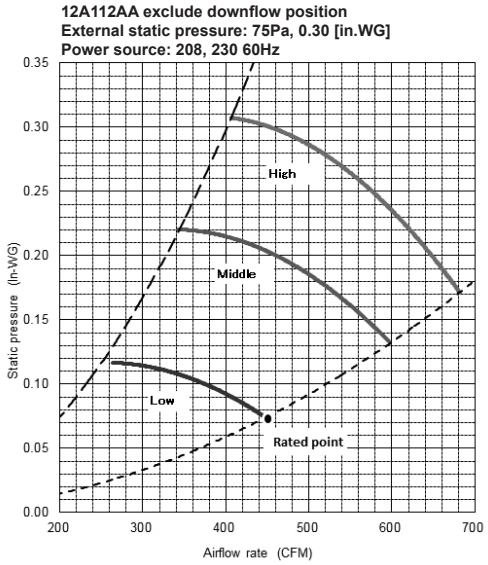

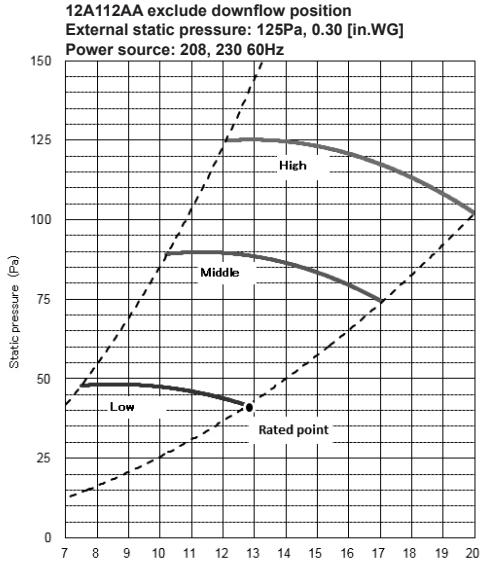

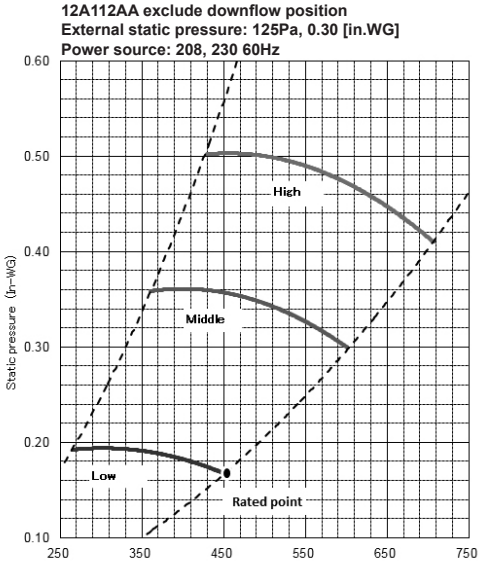

 © 2022 Mitsubishi Electric Trane HVAC US LLC. All rights reserved.

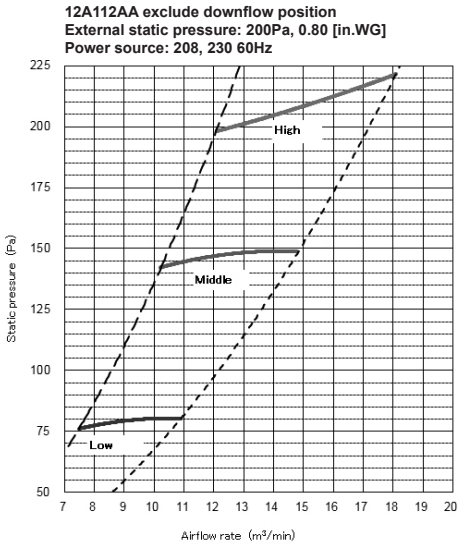

*. 200 Pa (0.80 in WG) does not have "Rated point".

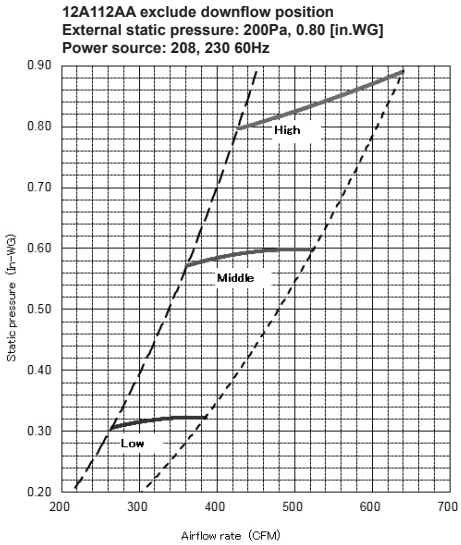

*. 200 Pa (0.80 in WG) does not have "Rated point".

NOTE

For downflow installations, please see downflow kit manuals.

 © 2022 Mitsubishi Electric Trane HVAC US LLC. All rights reserved.

4.2. NAXAMT18A112AA

Vertical, Horizontal Right, Horizontal Left

18A112AA exclude downflow position
External static pressure: 75Pa, 0.30 [in.WG]
Power source: 208, 230 60Hz

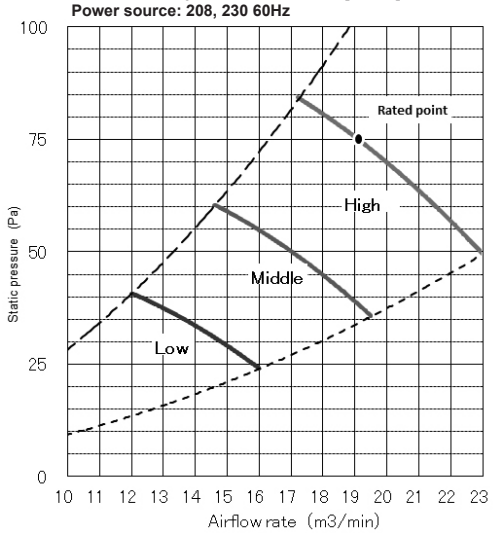

18A112AA exclude downflow position
External static pressure: 75Pa, 0.30 [in.WG]
Power source: 208, 230 60Hz

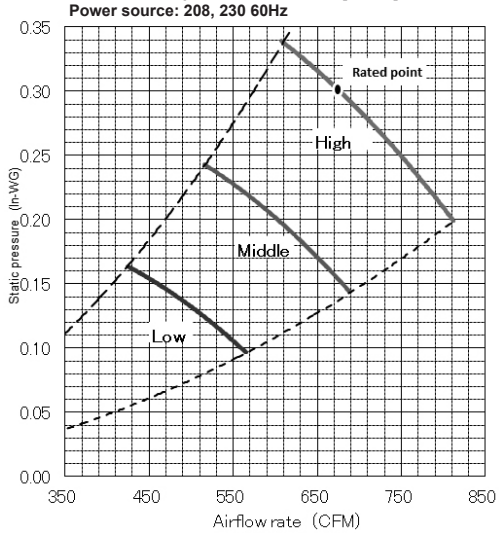

18A112AA exclude downflow position
External static pressure: 125Pa, 0.30 [in.WG]
Power source: 208, 230 60Hz

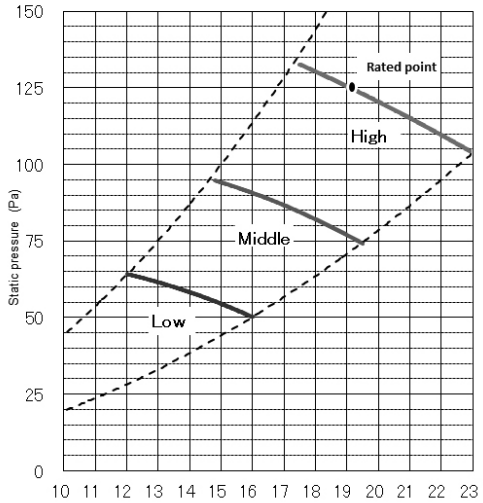

18A112AA exclude downflow position
External static pressure: 125Pa, 0.30 [in.WG]
Power source: 208, 230 60Hz

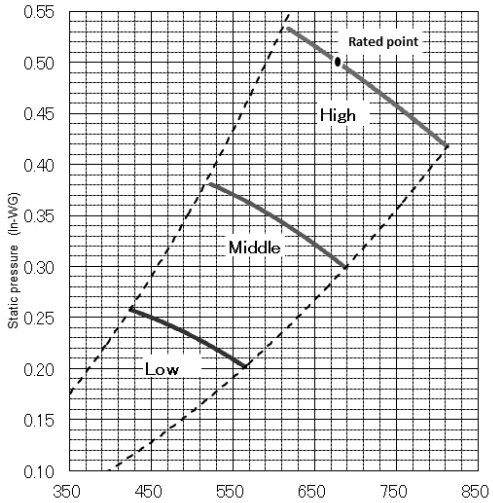

 © 2022 Mitsubishi Electric Trane HVAC US LLC. All rights reserved.

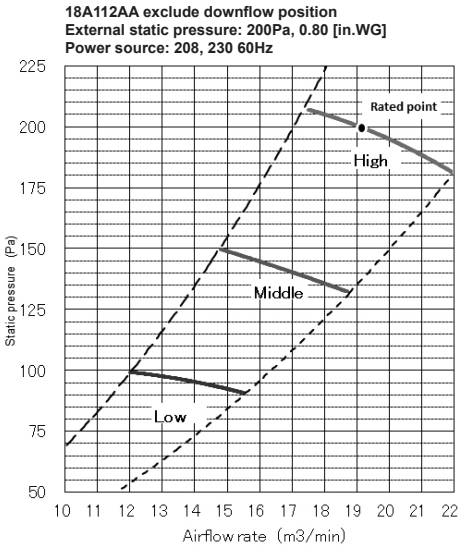

*. 200 Pa (0.80 in WG) does not have "Rated point".

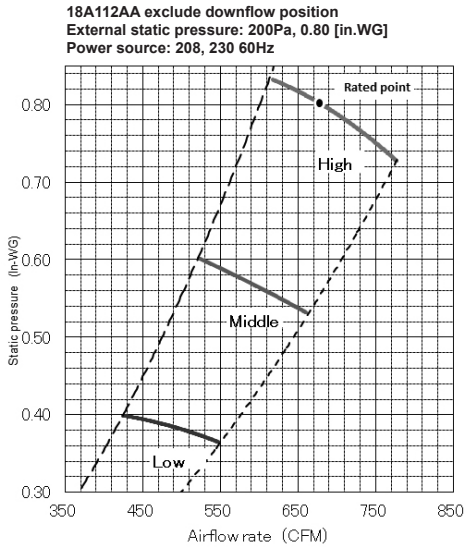

*. 200 Pa (0.80 in WG) does not have "Rated point".

NOTE

For downflow installations, please see downflow kit manuals.

 © 2022 Mitsubishi Electric Trane HVAC US LLC. All rights reserved.

4.3. NAXAMT24A112AA

Vertical, Horizontal Right, Horizontal Left

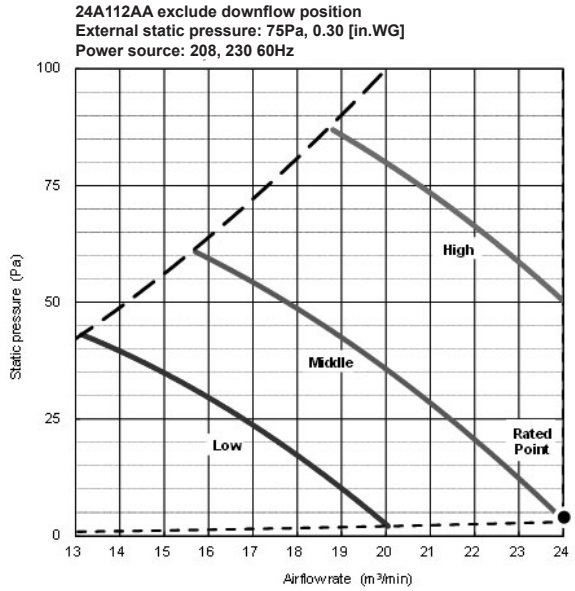

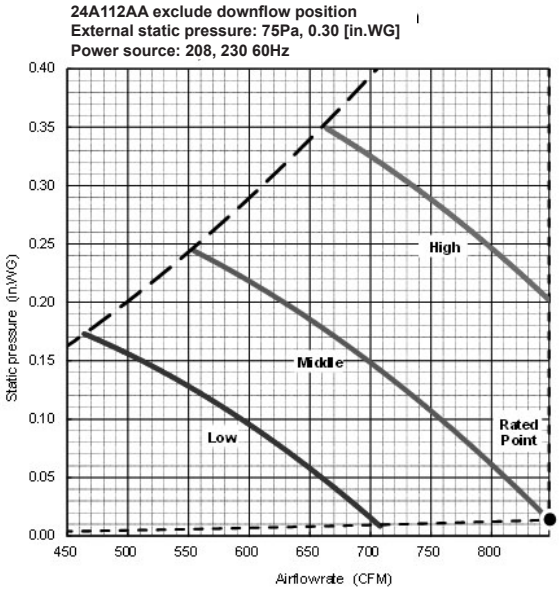

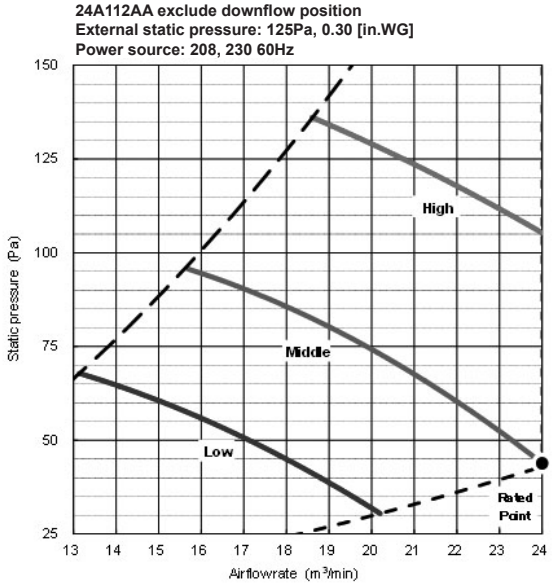

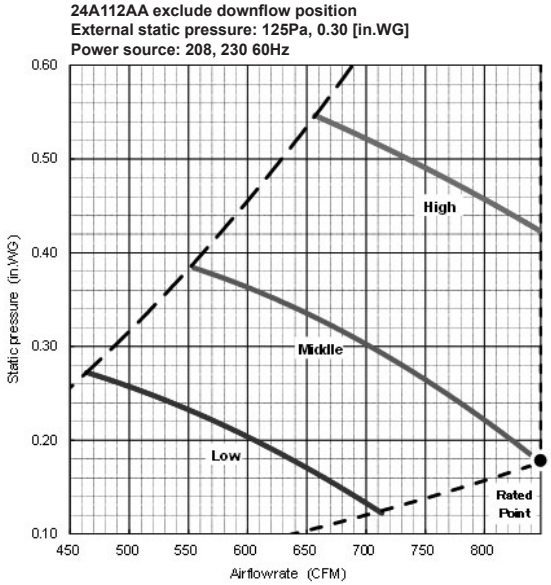

 © 2022 Mitsubishi Electric Trane HVAC US LLC. All rights reserved.

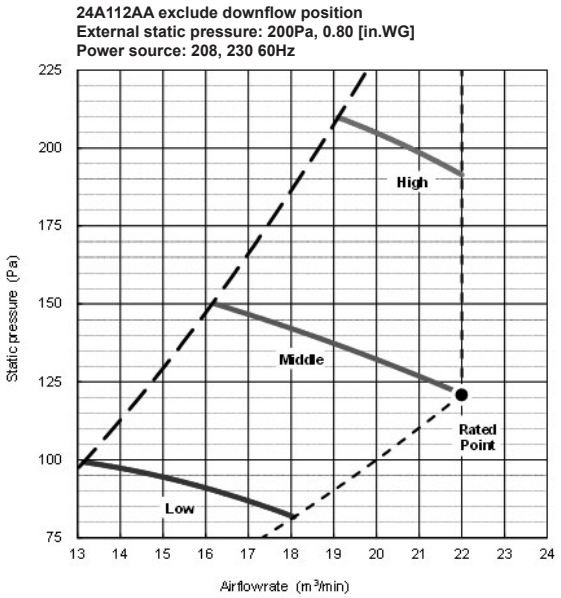

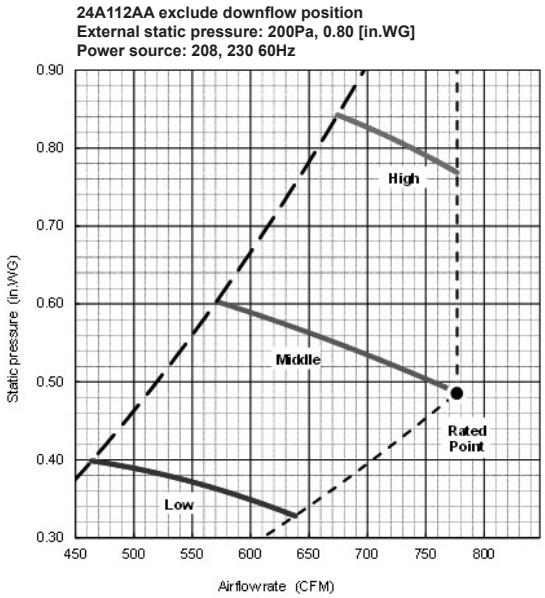

NOTE

For downflow installations, please see downflow kit manuals.

 © 2022 Mitsubishi Electric Trane HVAC US LLC. All rights reserved.

4.4. NAXAMT30A112AA

Vertical, Horizontal Right, Horizontal Left

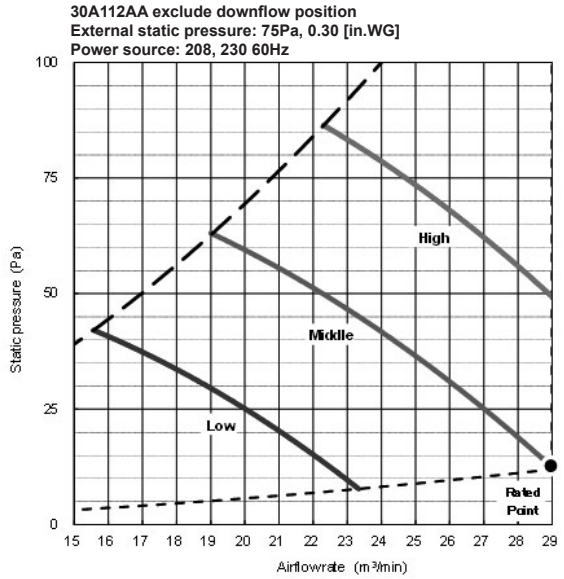

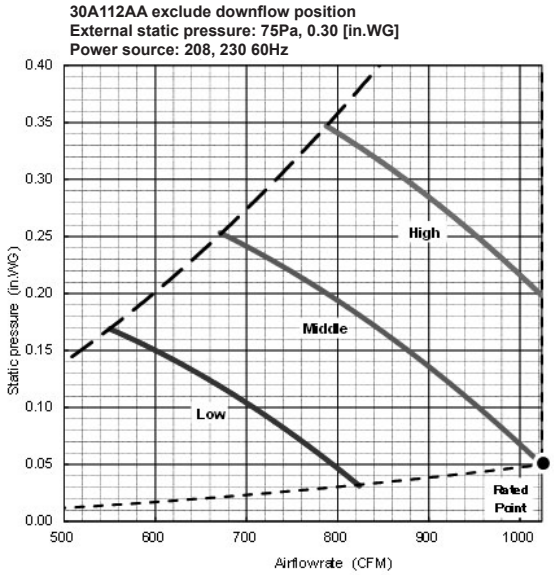

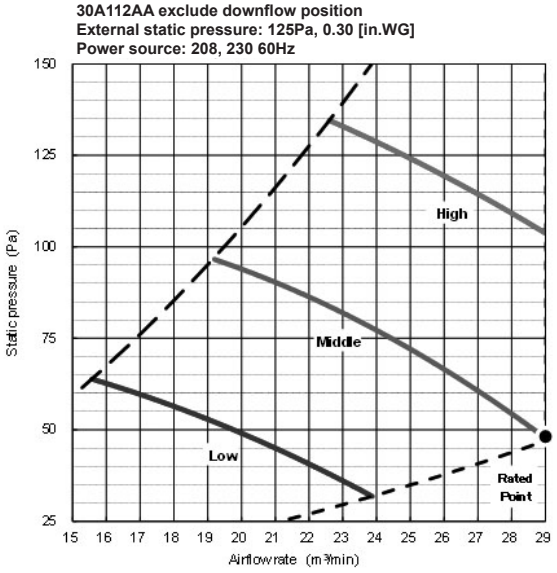

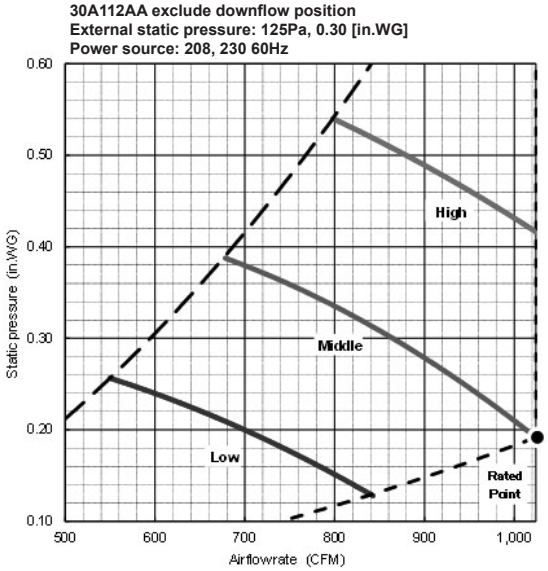

 © 2022 Mitsubishi Electric Trane HVAC US LLC. All rights reserved.

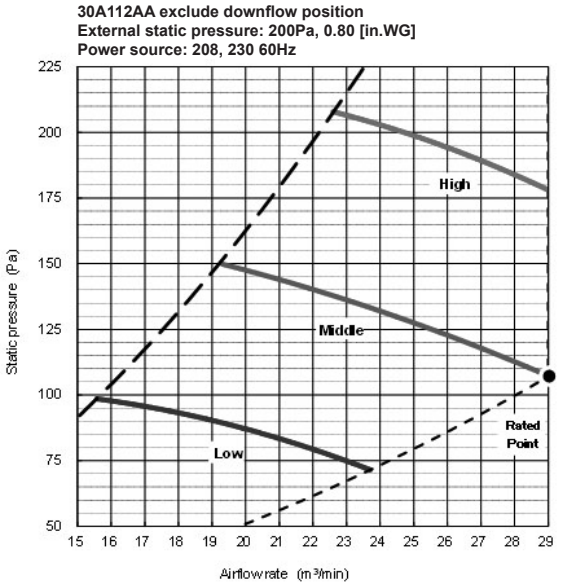

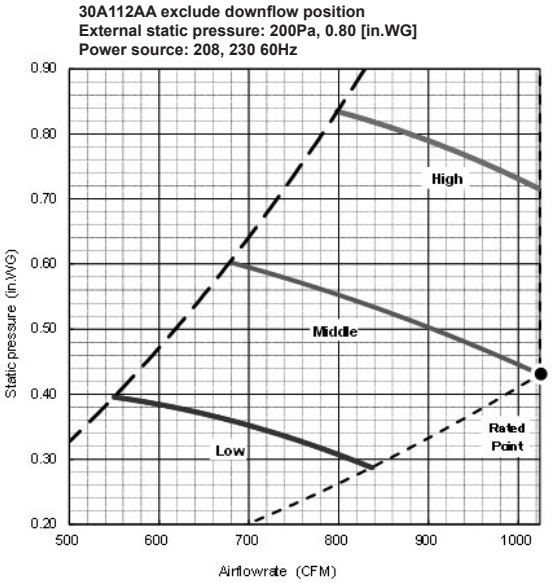

NOTE

For downflow installations, please see downflow kit manuals.

 © 2022 Mitsubishi Electric Trane HVAC US LLC. All rights reserved.

4.5. NAXAMT36A112AA

Vertical, Horizontal Right, Horizontal Left

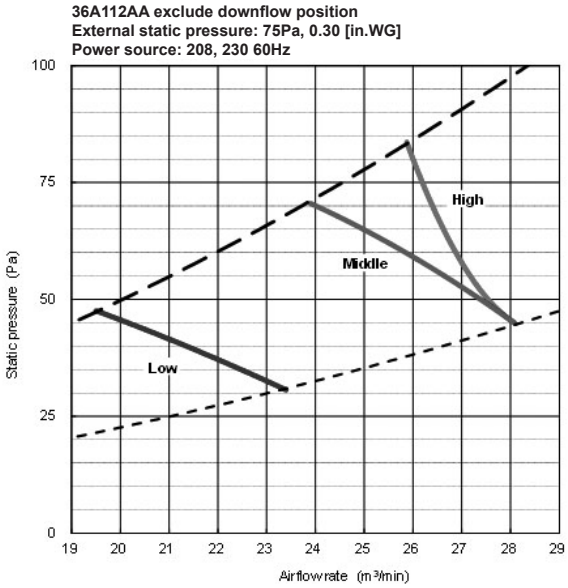

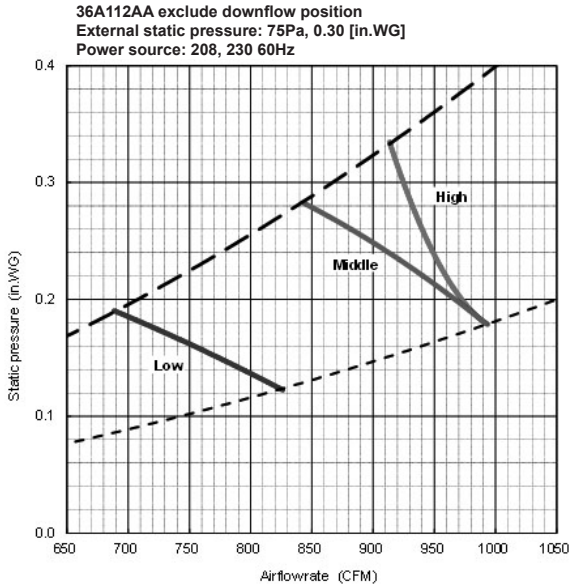

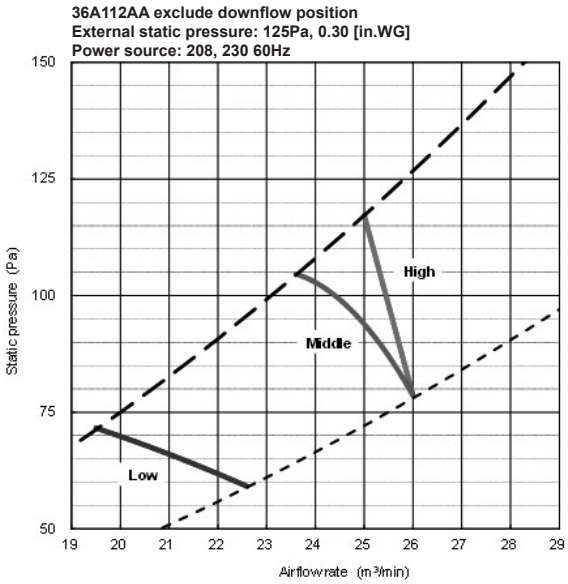

*. "Rated point" may not be inside of the envelope.

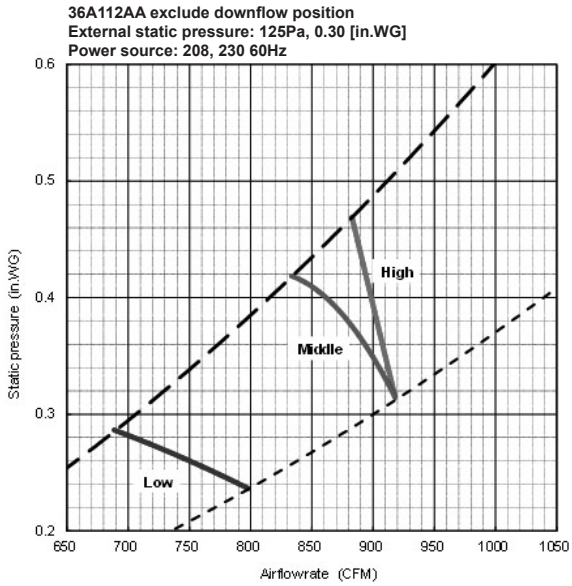

*. "Rated point" may not be inside of the envelope.

 © 2022 Mitsubishi Electric Trane HVAC US LLC. All rights reserved.

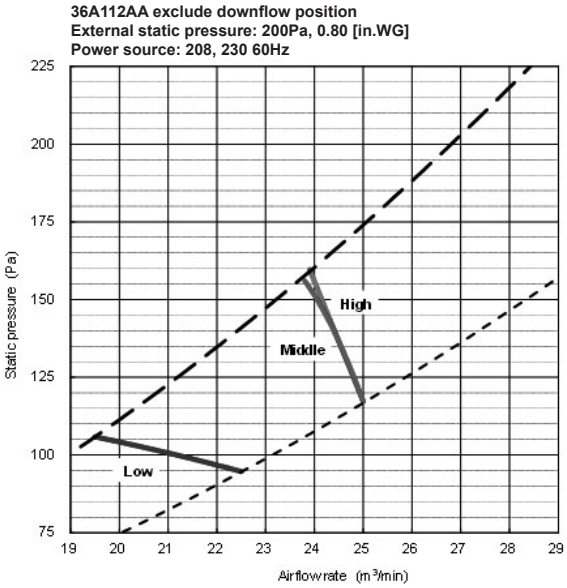

*. "Rated point" may not be inside of the envelope.

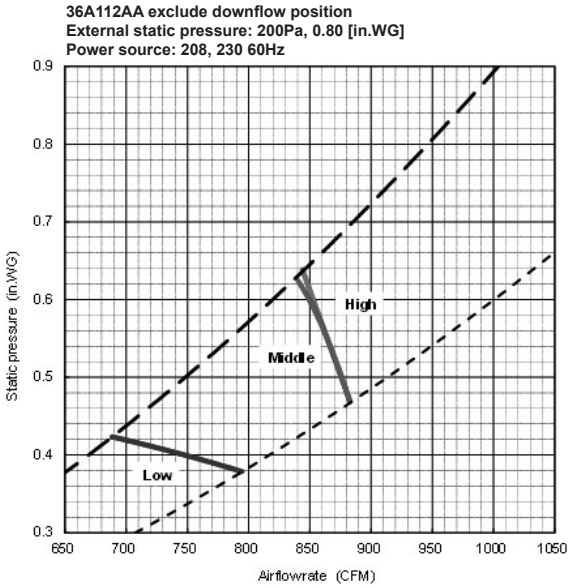

*. "Rated point" may not be inside of the envelope.

NOTE

For downflow installations, please see downflow kit manuals.

 © 2022 Mitsubishi Electric Trane HVAC US LLC. All rights reserved.

5. SOUND PRESSURE LEVELS

5.1. Sound pressure level

Multi-Position

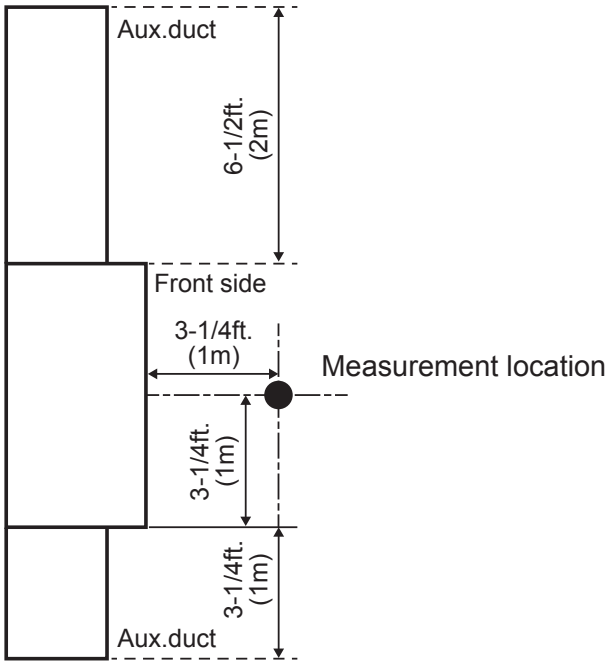

 © 2022 Mitsubishi Electric Trane HVAC US LLC. All rights reserved.

5.2. NC Curves

5.2.1. NAXAMT12A112AA

Condition	Acale	LINE
High	36	———
Middle	34	- - -
Low	28	———
-	-	- - -

External Static Pressure : 0.3inWG. (75Pa)

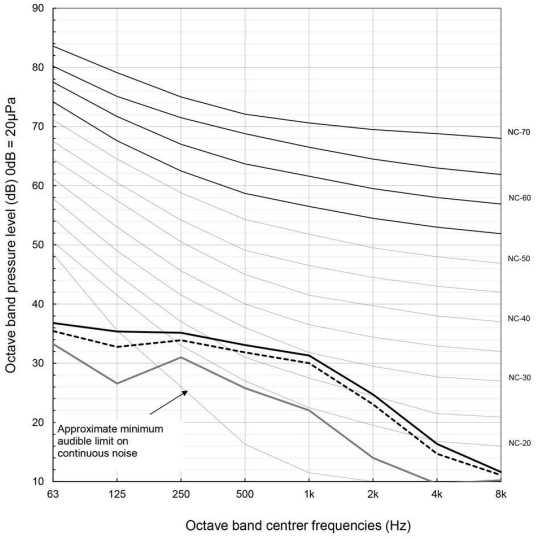

Condition	Acale	LINE
High	47	———
Middle	42	- - -
Low	35	———
-	-	- - -

External Static Pressure : 0.8inWG. (200Pa)

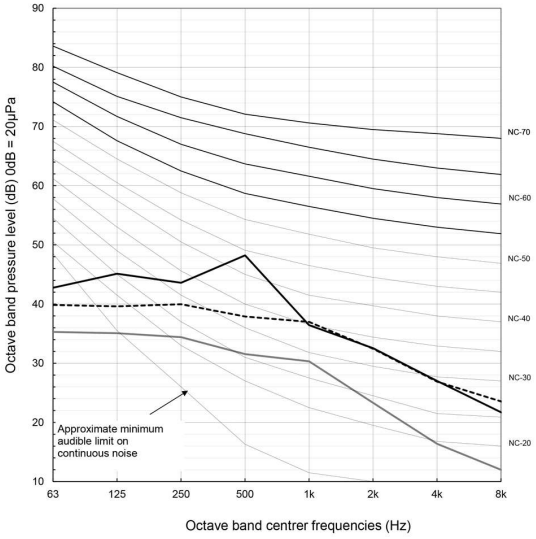

Condition	Acale	LINE
High	39	———
Middle	36	- - -
Low	29	———
-	-	- - -

External Static Pressure : 0.5inWG. (125Pa)

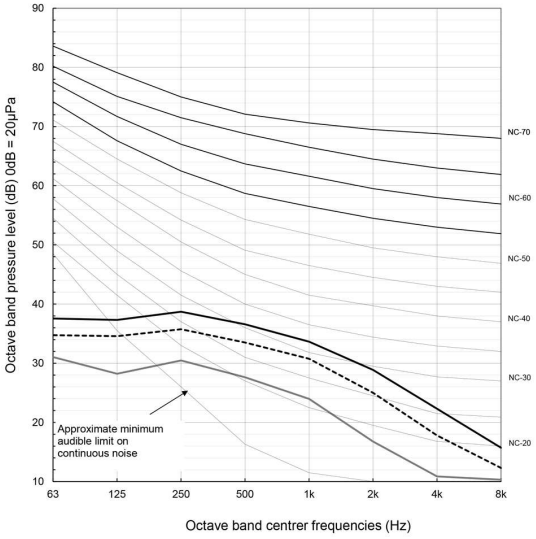

 © 2022 Mitsubishi Electric Trane HVAC US LLC. All rights reserved.

5.2.2. NAXAMT18A112AA

Condition	Acale	LINE
High	36	—
Middle	35	- -
Low	31	—
-	-	- -

External Static Pressure : 0.3inWG. (75Pa)

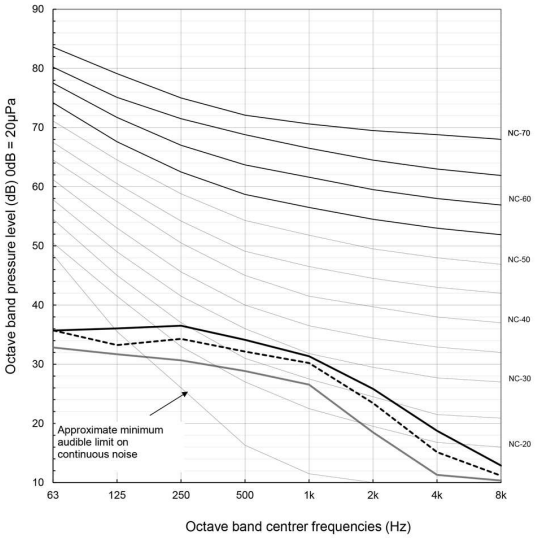

Condition	Acale	LINE
High	45	—
Middle	41	- -
Low	37	—
-	-	- -

External Static Pressure : 0.8inWG. (200Pa)

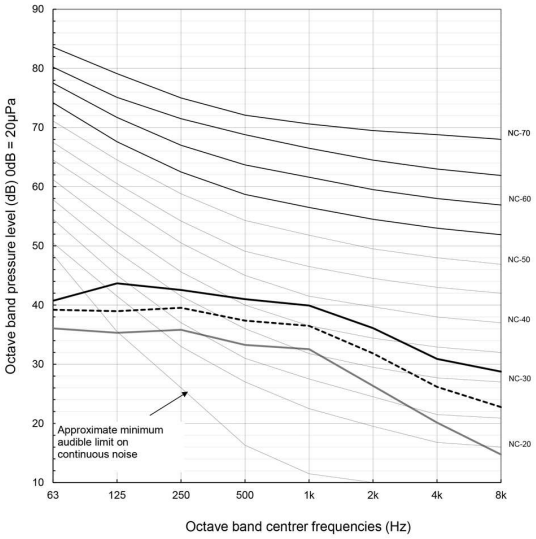

Condition	Acale	LINE
High	41	—
Middle	36	- -
Low	33	—
-	-	- -

External Static Pressure : 0.5inWG. (125Pa)

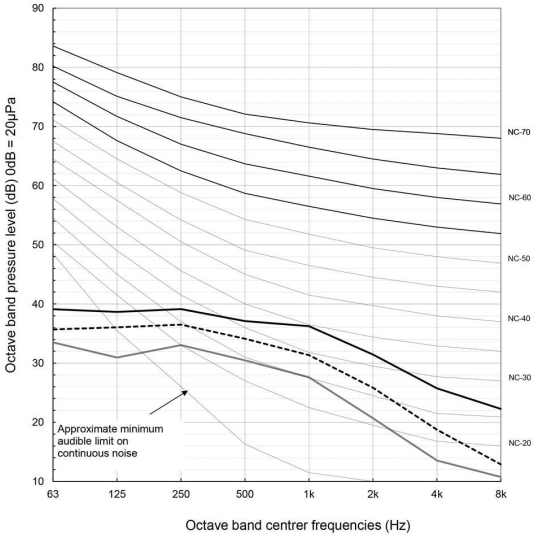

 © 2022 Mitsubishi Electric Trane HVAC US LLC. All rights reserved.

5.2.3. NAXAMT24A112AA

Condition	Acale	LINE
High	37	—
Middle	35	- -
Low	31	—
-	-	- -

External Static Pressure : 0.3inWG. (75Pa)

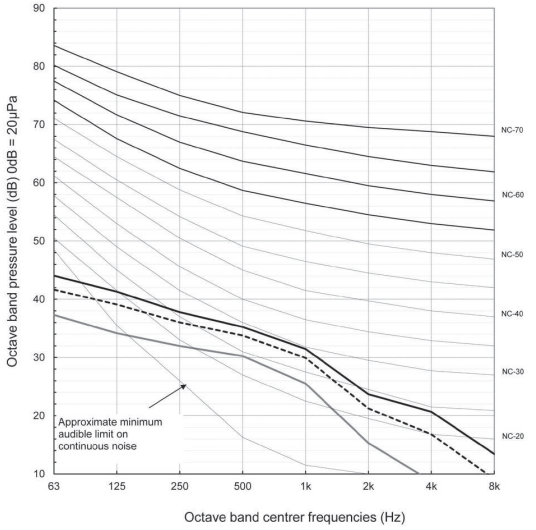

Report Number	US-E2-011

Condition	Acale	LINE
High	45	—
Middle	41	- -
Low	37	—
-	-	- -

External Static Pressure : 0.8inWG. (200Pa)

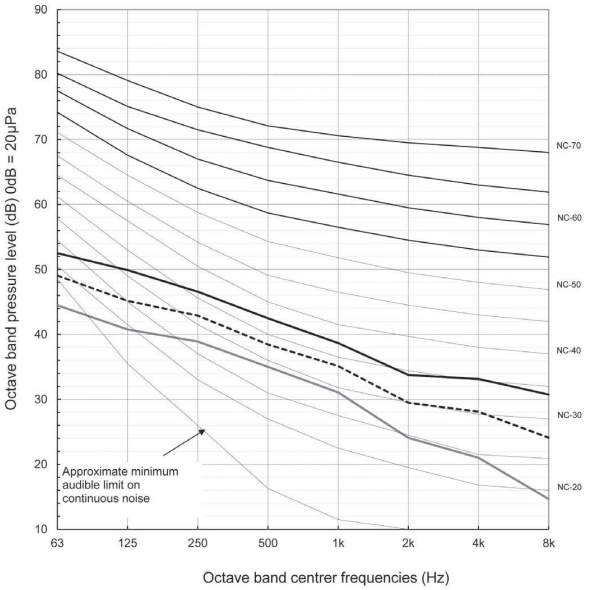

Report Number	US-E2-013

Condition	Acale	LINE
High	41	—
Middle	36	- -
Low	33	—
-	-	- -

External Static Pressure : 0.5inWG. (125Pa)

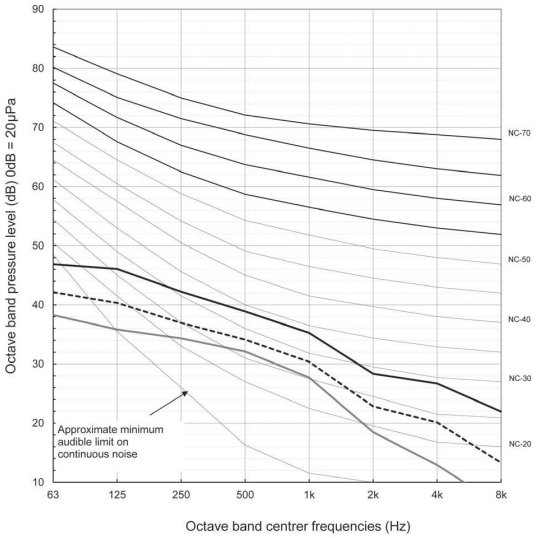

Report Number	US-E2-012

 © 2022 Mitsubishi Electric Trane HVAC US LLC. All rights reserved.

5.2.4. NAXAMT30A112AA

Condition	Acale	LINE
High	38	—
Middle	34	- -
Low	30	—
-	-	- -

External Static Pressure : 0.3inWG. (75Pa)

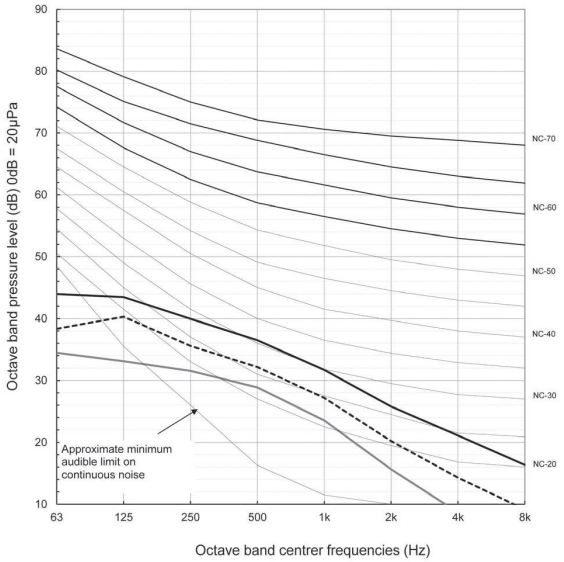

Report Number	US-E2-014

Condition	Acale	LINE
High	43	—
Middle	40	- -
Low	35	—
-	-	- -

External Static Pressure : 0.8inWG. (200Pa)

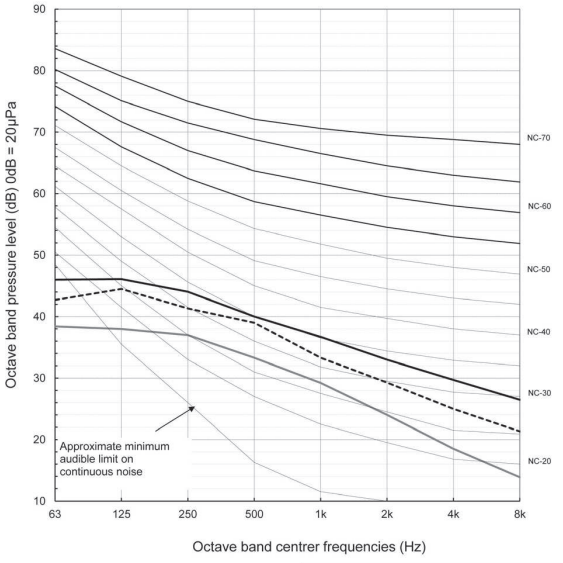

Report Number	US-E2-016

Condition	Acale	LINE
High	41	—
Middle	37	- -
Low	32	—
-	-	- -

External Static Pressure : 0.5inWG. (125Pa)

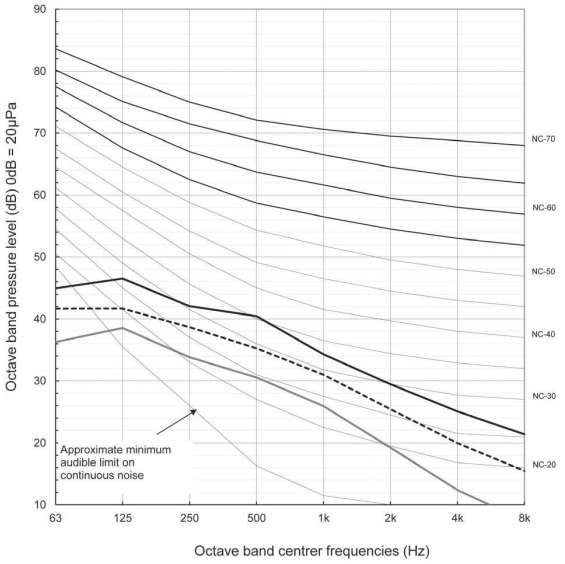

Report Number	US-E2-015

 © 2022 Mitsubishi Electric Trane HVAC US LLC. All rights reserved.

5.2.5. NAXAMT36A112AA

Condition	Acale	LINE
High	43	——
Middle	38	– –
Low	34	——
-	-	– –

External Static Pressure : 0.3inWG. (75Pa)

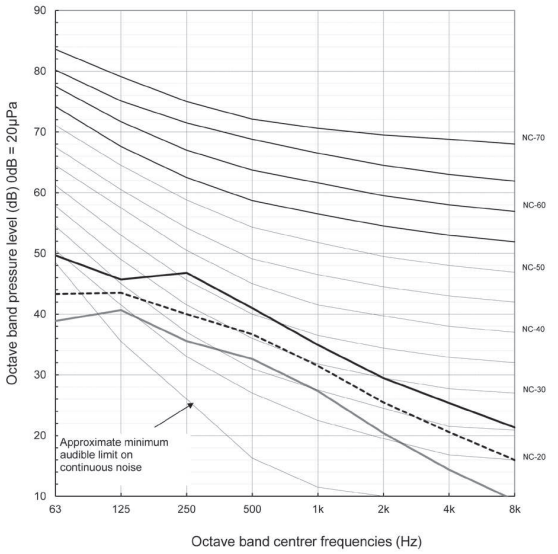

Report Number	US-E2-017

Condition	Acale	LINE
High	43	——
Middle	41	– –
Low	37	——
-	-	– –

External Static Pressure : 0.8inWG. (200Pa)

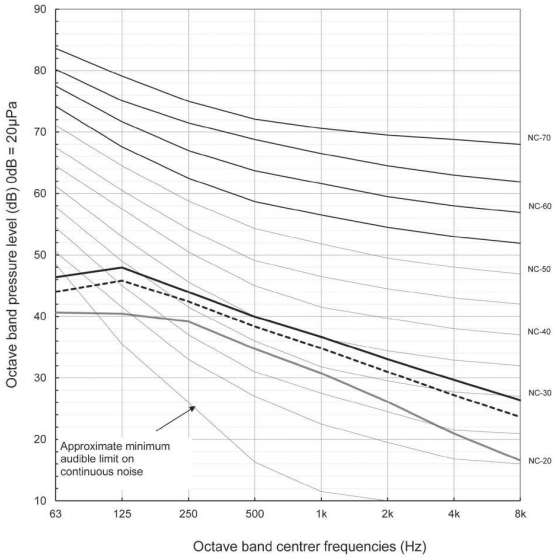

Report Number	US-E2-019

Condition	Acale	LINE
High	42	——
Middle	40	– –
Low	35	——
-	-	– –

External Static Pressure : 0.5inWG. (125Pa)

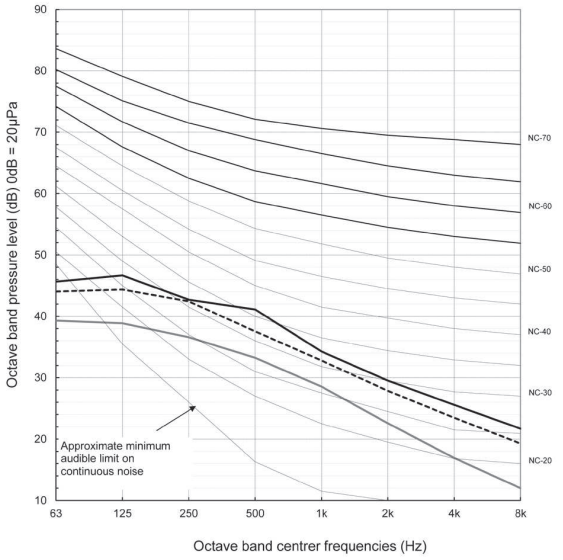

Report Number	US-E2-018

 © 2022 Mitsubishi Electric Trane HVAC US LLC. All rights reserved.

5.2.6. Air Filter

Power source: 208/230V 60Hz

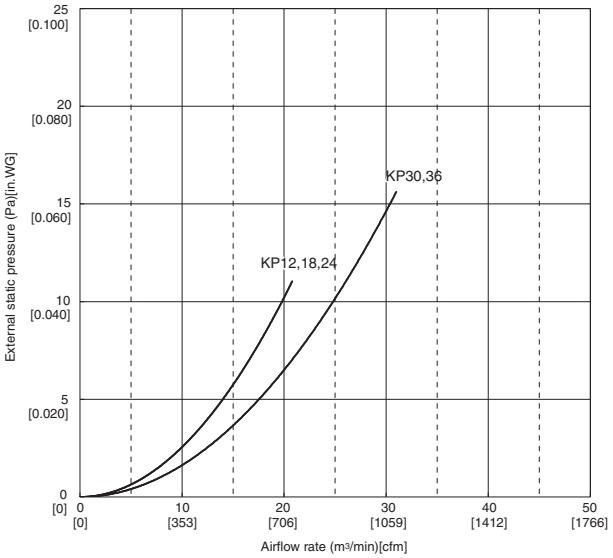

 © 2022 Mitsubishi Electric Trane HVAC US LLC. All rights reserved.

6. OUTLINES & DIMENSIONS

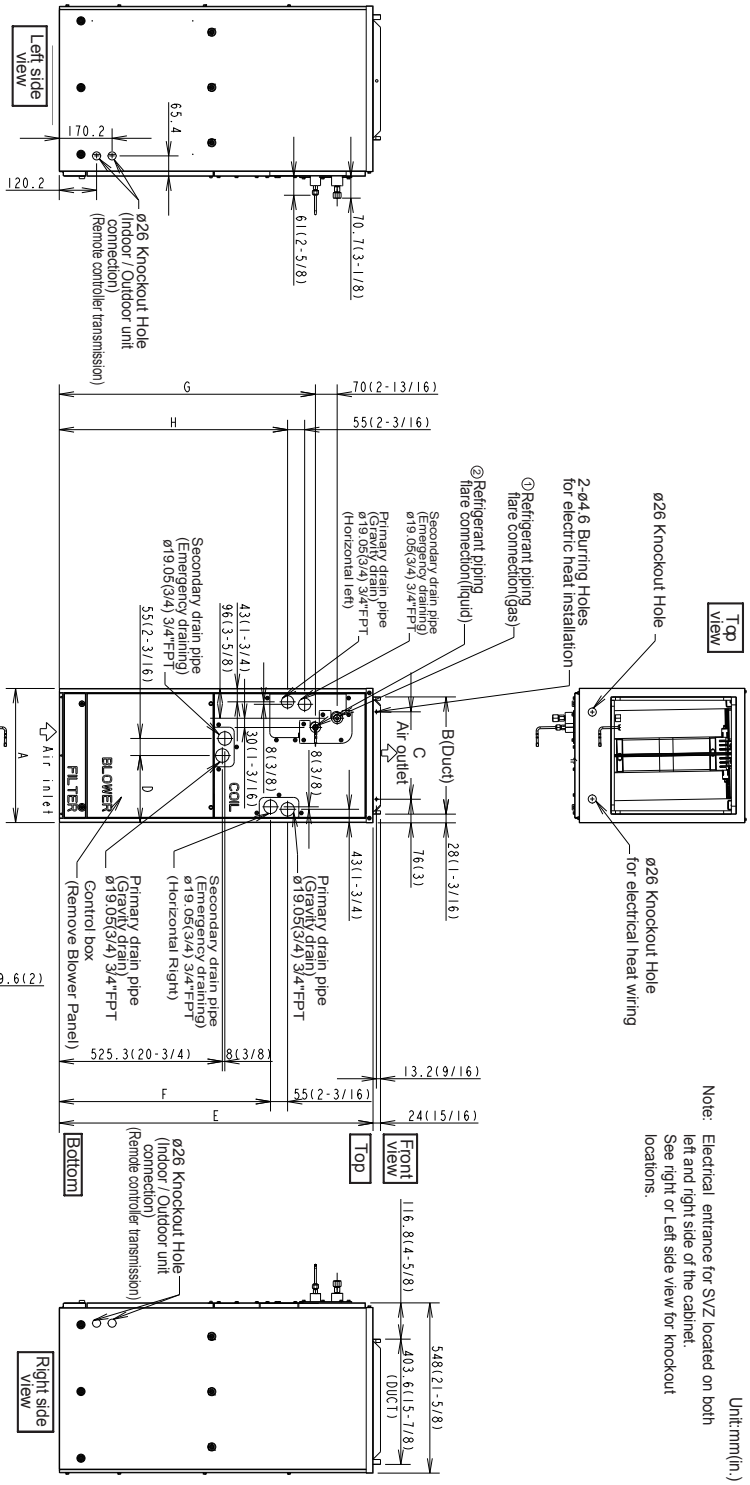

Unit:mm(in.)

Model	Nominal Filter Size	Duct Connection
NAXAMT12A112A*	508 x 406.4 x 25.4 (20 x 16 x 1)	376 x 402 (14-13/16 x 15-7/8)
NAXAMT18A112A*		
NAXAMT24A112A*		
NAXAMT30A112A*	508 x 508 x 25.4 (20 x 20 x 1)	477 x 402 (18-13/16 x 15-7/8)
NAXAMT36A112A*		

Model	A	B	C	D	E	F	G	H	J	Gas Pipe	Liquid pipe
NAXAMT12A112A*	432 (17)	376 (14-13/16)	281 (11-1/8)	224 (8-7/8)	1,010.8 (39-13/16)	680 (26-13/16)	823 (32-7/16)	735.5 (29)	360 (14-3/16)	ø 9.52 (3/8)	ø 6.35 (1/4)
NAXAMT18A112A*										ø 12.7 (1/2)	
NAXAMT24A112A*											
NAXAMT30A112A*	534 (21)	477 (18-13/16)	382.6 (15-1/8)	266.5 (10-1/2)	1,113.8 (43-7/8)	737 (29-1/16)	953.5 (37-9/16)	792 (31-3/16)	461 (18-3/16)	ø 15.88 (5/8)	ø 9.52 (3/8)
NAXAMT36A112A*											

 © 2022 Mitsubishi Electric Trane HVAC US LLC. All rights reserved.

7. WIRING DIAGRAM

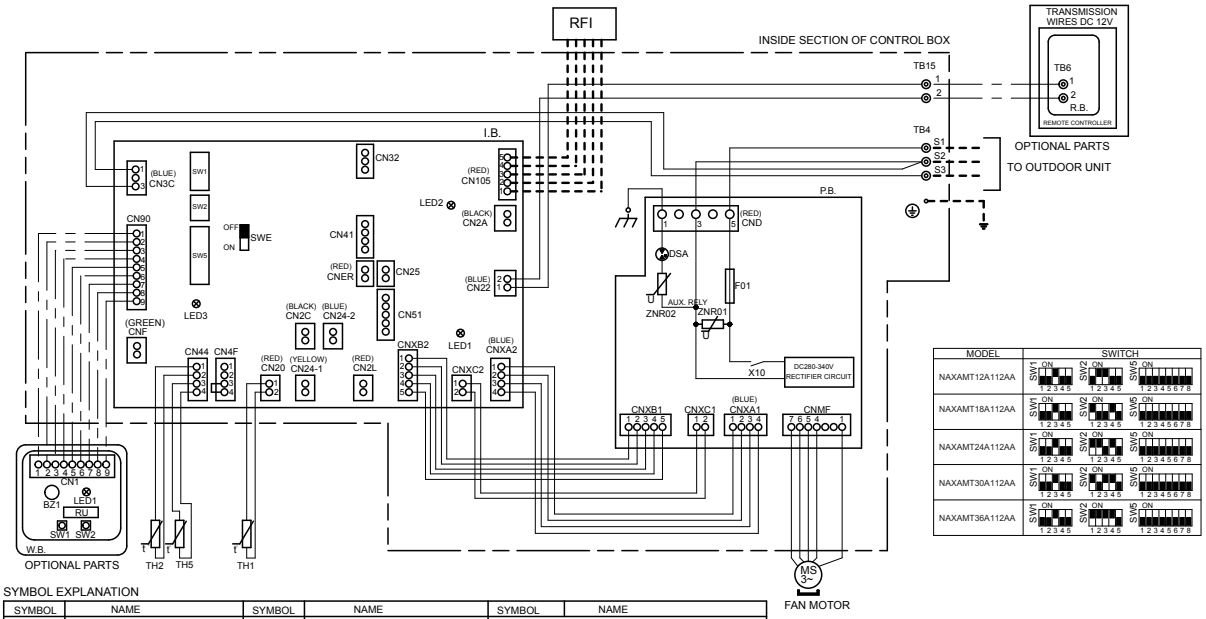

MODEL	SWITCH
NAXAMT12A112AA	SW1 ON 1 2 3 4 5; SW2 ON 1 2 3 4 5; SW5 ON 1 2 3 4 5 6 7 8
NAXAMT18A112AA	SW1 ON 1 2 3 4 5; SW2 ON 1 2 3 4 5; SW5 ON 1 2 3 4 5 6 7 8
NAXAMT24A112AA	SW1 ON 1 2 3 4 5; SW2 ON 1 2 3 4 5; SW5 ON 1 2 3 4 5 6 7 8
NAXAMT30A112AA	SW1 ON 1 2 3 4 5; SW2 ON 1 2 3 4 5; SW5 ON 1 2 3 4 5 6 7 8
NAXAMT36A112AA	SW1 ON 1 2 3 4 5; SW2 ON 1 2 3 4 5; SW5 ON 1 2 3 4 5 6 7 8

SYMBOL EXPLANATION

SYMBOL	NAME
I.B.	INDOOR CONTROLLER BOARD
CN24-1	CONNECTOR (HEATER CONTROL 1ST)
CN24-2	CONNECTOR (HEATER CONTROL 2ND)
CN25	CONNECTOR (HUMIDITY OUTPUT)
CN2A	CONNECTOR (0-10V ANALOG INPUT)
CN2C	CONNECTOR (ERV OUTPUT)
CN2L	CONNECTOR (LOSSNAY)
CN32	CONNECTOR (REMOTE SWITCH)
CN41	CONNECTOR (HA TERMINAL-A)
CN51	CONNECTOR (CENTRALLY CONTROL)
CN90	CONNECTOR (WIRELESS)
CN105	CONNECTOR (RADIO FREQUENCY INTERFACE)
CNER	CONNECTOR (ERV INPUT)
CNF	CONNECTOR (HUMIDITY INPUT)
LED1	LED(POWER SUPPLY)
LED2	LED(REMOTE CONTROLLER SUPPLY)
LED3	LED(TRANSMISSION INDOOR-OUTDOOR)

SYMBOL	NAME
I.B.	INDOOR CONTROLLER BOARD
SW1	SWITCH (FOR MODEL SELECTION)
SW2	SWITCH (FOR CAPACITY CODE)
SW5	SWITCH (FOR MODE SELECTION)
SWE	CONNECTOR (EMERGENCY OPERATION)
P.B.	POWER SUPPLY BOARD
F01	FUSE AC250V 6.3A
ZNR01,02	VARISTOR
DSA	ARRESTOR
X10	AUX. RELY
TH1	INTAKE AIR TEMP. THERMISTOR
TH2	PIPE TEMP. THERMISTOR/LIQUID
TH5	COND./EVA.TEMP. THERMISTOR
TB4	TERMINAL BLOCK (INDOOR/OUTDOOR CONNECTING LINE)
TB15	TERMINAL BLOCK (REMOTE CONTROLLER TRANSMISSION LINE)
RFI	RADIO FREQUENCY INTERFACE FOR RF THERMOSTAT

SYMBOL	NAME
OPTIONAL PARTS	
W.B.	IR WIRELESS REMOTE CONTROLLER BOARD
RU	RECEIVING UNIT
BZ1	BUZZER
LED1	LED(RUN INDICATOR)
SW1	SWITCH(HEATING ON/OFF)
SW2	SWITCH(COOLING ON/OFF)
R.B.	WIRED REMOTE CONTROLLER BOARD
TB6	TERMINAL BLOCK (REMOTE CONTROLLER TRANSMISSION LINE)

Note1.Since the outdoor side electric wiring may change be sure to check the outdoor unit electric wiring for servicing.
2.Indoor and outdoor connecting wires are made with polarities,make wiring matching terminal numbers (S1,S2,S3).
3.Symbols used in wiring diagram above are as follows.
:CONNECTOR
:TERMINAL
:(HEAVY DOTTED LINE):FIELD WIRING
:(THIN DOTTED LINE):OPTIONAL PARTS
4.Use copper supply wire.
UTILISER DES FILS D'ALIMENTATION EN CUIVRE.

Manipulation Details

1.Performing a test run for fan

To perform a test run for the fan,
turn on the SWE on the control board while the indoor unit is being powered.

Be sure to turn off the SWE after completing a test run.

Note) The SWE should not be left turned on for longer than 10 hours.

2.OPERATION of LED for indoor circuit board service

Symbol	LED operation under normal state
LED1	At applying main power source → Lighting
LED2	At receiving MA transmission power source → Lighting
LED3	At transmitting indoor-outdoor units → Flashing

 © 2022 Mitsubishi Electric Trane HVAC US LLC. All rights reserved.

8. REFRIGERANT SYSTEM DIAGRAM

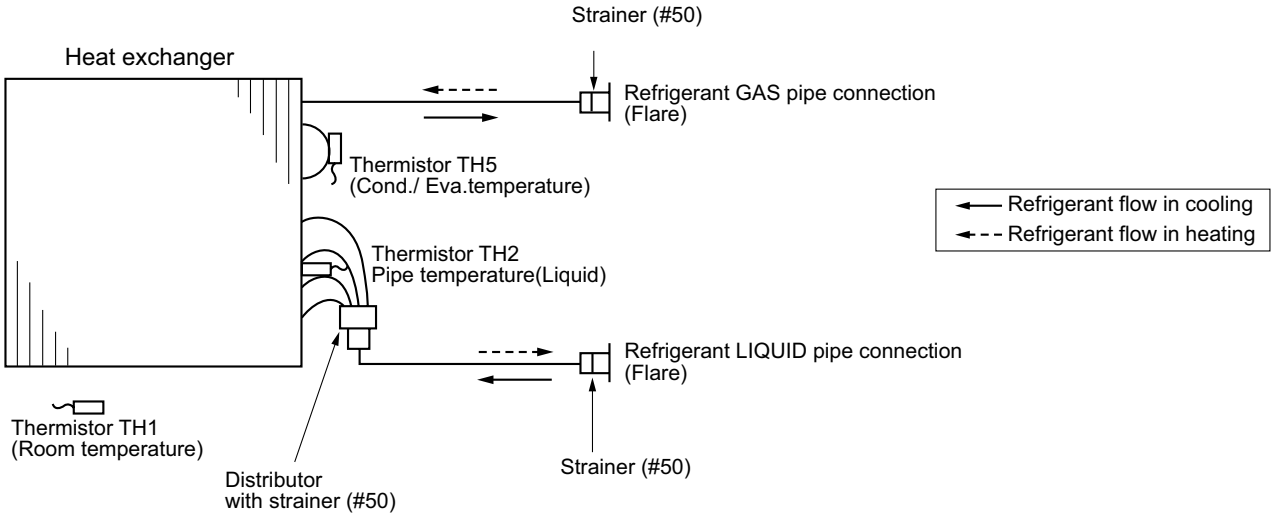

 © 2022 Mitsubishi Electric Trane HVAC US LLC. All rights reserved.

9. HEATER CONTROL

9.1. Control Specifications And Function Setting

- Table 1 shows the mode setting for the field-installed heater.
  Table. 1 [Function Table]
  Select unit numbers 01 to 03 or all units (AL [wired remote controller] / 07 [IR wireless remote controller])

Mode (function) No.		Factory Setting	Mode	Heater Operation In Error	Heater Operation During Defrost	Fan Control When Heater ON
Wired remote controller (RF thermostat)						
11 (111)	23 (123)					
1	1	•	Heater Available			
2	1	–	Heater Available	OFF	OFF	High
			Disable heater during Defrost and Error			
2	2	–	Heater Available	ON	ON	High
			Enable heater and fan during Defrost and Error *1			

*1 Heater will not operate during all error modes. Heater will only operate during a communication error between indoor unit and outdoor unit.

- Table 2 shows how the field-installed heater is controlled.
  Table. 2 [Heater Control Table]

Mode Change	Condition								
	(To -T_{RA}) > 2.7 ° F [1.5 °C]	AND	T_{RA} has not increased by 0.9 °F [0.5° C] in X min	W1 ON for > 7 min	AND	(To -T_{RA}) > 2.7 ° F [1.5 ° C]	AND	T_{RA} has not increased by 0.9 ° F [0.5° C] in 7 min	(To -T_{RA}) < 0.9 °F [0.5° C]
W1 ON	○	AND	○						
W2 ON				○	AND	○	AND	○	
W1 OFF									○
W2 OFF									○

KEY
- W1: Furnace Heat Stage 1
- W2: Furnace Heat Stage 2
- To: Set point temperature
- T_{RA}: Return Air temperature
- X: Time delay (Selectable. Default is 24 min. Selectable to 24 or 29 min)

 © 2022 Mitsubishi Electric Trane HVAC US LLC. All rights reserved.

- Table 3 shows how the time delay is selected
  Table. 3 [Time Delay Selection Table]

Request Code[1]	Action[2]
390	Monitor Time Delay Setting
391	Set Time Delay to 14 minutes
392	Set Time Delay to 19 minutes
393	Set Time Delay to 24 minutes[3]
394	Set Time Delay to 29 minutes

[1] Time delay can only be selected with MA controller. If use of a non-MA controller is desired, the time delay must first be selected with the MA controller. Then the non-MA controller can be attached and used.

[2] Delay times are approximate to ± 1 minute.

[3] The default time delay setting is 24 minutes.

- Chart 1 and Table 4 show an example of heater operation.
  Chart 1 [Heater Operation Example]

The figure below shows an example of electric heater operation. See the indoor unit service manuals for more information.

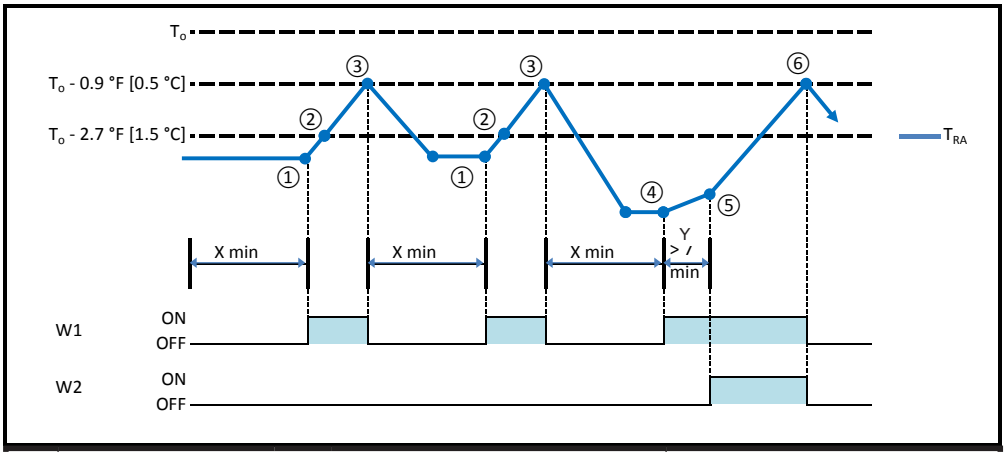

Step	Condition			Result
①	(To -T_{RA}) > 2.7 °F [1.5 °C]	AND	T_{RA} has not increased by 0.9 °F [0.5°C] in X min	W1 ON
②	(To -T_{RA}) < 2.7 °F [1.5 °C]	AND	T_{RA} increasing faster than 0.9 °F [0.5°C] in Y min	W2 not ON
③	(To -T_{RA}) < 0.9 °F [0.5°C]			W1 OFF
④	(To -T_{RA}) > 2.7 °F [1.5 °C]	AND	T_{RA} has not increased by 0.9 °F [0.5°C] in X min	W1 ON
⑤	(To -T_{RA}) > 2.7 °F [1.5 °C]	AND	T_{RA} not increasing faster than 0.9 °F [0.5°C] in Y min	W2 ON
⑥	(To -T_{RA}) < 0.9 °F [0.5 °C]			W1 OFF W2 OFF

- Table. 4 [Heater Operation Example]

Step	Condition			Result
①	(T_o -T_{RA}) > 2.7 °F [1.5 °C]	AND	T_{RA} has not increased by 0.9 °F [0.5°C] in X min	EH1 ON
②	(T_o -T_{RA}) < 2.7 °F [1.5 °C]	AND	T_{RA} increasing faster than 0.9 °F [0.5°C] in 7 min	EH2 not ON
③	(T_o -T_{RA}) < 0.9 °F [0.5°C]			EH1 OFF

 © 2022 Mitsubishi Electric Trane HVAC US LLC. All rights reserved.

Step	Condition			Result
④	(T_o -T_{RA}) > 2.7 °F [1.5 °C]	AND	T_{RA} has not increased by 0.9 °F [0.5°C] in X min	EH1 ON
⑤	(T_o -T_{RA}) > 2.7 °F [1.5 °C]	AND	T_{RA} not increasing faster than 0.9 °F [0.5°C] in 7 min	EH2 ON
⑥	(T_o -T_{RA}) < 0.9 °F [0.5°C]			EH1 OFF EH2 OFF

 © 2022 Mitsubishi Electric Trane HVAC US LLC. All rights reserved.

9.2. Fan control

By setting Mode No. 23 in the Function Table in section 9-1 and using CN4Y from the CN24RELAY-KIT-CM3 kit, the following patterns of fan control will become possible.

Fan Control Patterns

CN4Y for FAN control (CN24RELAY-KIT-CM3)	Mode (function) No. 23 (123)	Heater operation in defrost and error[1]	Fan operation in defrost and error	Fan (All modes other than defrost and error)	Factory Setting
Enabled	1	OFF	STOP	Set (Heater ON) High[2]	○
	2	ON	STOP	(Heater ON)	–

[1] Heater will not operate during all error modes. Heater will only operate during a communication error between indoor unit and outdoor unit

[2] While the heater is on, the fan will operate at high speed regardless of the fan setting on the remote controller.

WARNING

If a heater is installed in the duct, do not use CN4Y. By doing so, the fan will turn off when the heater is on, which may result in fire.

Fan Speed Setting[1]

Mode	Setting		Mode No.	Setting	Initial Setting
	Heating Thermo-OFF	DEFROST or ERROR			
Fan Control	Very Low	Very Low	25	1	○
	STOP	Remote Controller Setting	25	2	–
	Remote Controller Setting	Remote Controller Setting	25	3	–

[1]Refer to the Installation Manual for function settings.

 © 2022 Mitsubishi Electric Trane HVAC US LLC. All rights reserved.

9.3. CN24RELAY-KIT-CM3 (Optional Parts) installation

The following section describes installation of the External Heater Adapter that connects to SVZ-KP-NA series indoor unit. This products is the special wiring parts to drive an electric heater with the air conditioner.

(1) Parts list

Check that the following parts are included in the package.

1. External output cable..... 2 in total
   Two types of cables with different connectors are included.
2. Panel heater connector..... 3 in total
   White: 3

(2) Connection to the indoor unit

Use the cables that fit the connectors on the indoor unit control board.

1. External output cable
   This cable is used to connect a relay circuit for an interlocked operation with either an electric or a panel heater.
   Select the heater output pattern (1st = CN24-1 or 2nd = CN24-2) to use, and connect the cable to the connector on the indoor unit control board that corresponds to the selection.
2. Panel heater connector
   This connector is used to perform an interlocked operation with a panel heater. Depending on the indoor unit control board specification, connect the cable to CN4Y as appropriate.

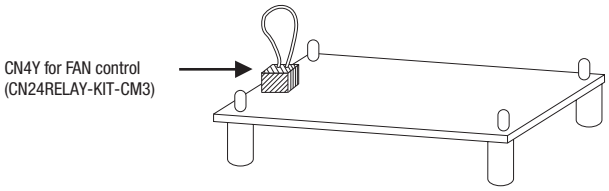

3) Wiring

- A basic connection method is shown below.

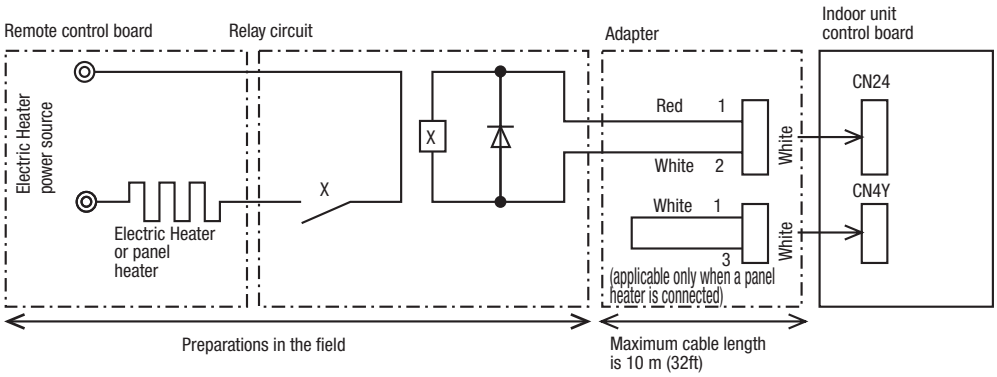

- The length of the electrical wiring for the CN24RELAY-KIT-CM3 is 2 meters (6-1/2 ft.)
- To extend this length, use sheathed 2-core cable.
  Control cable type: CVV, CVS, CPEV or equivalent.Cable size: 0.5 mm^2 ~ 1.25 mm^2 (16 to 22 AWG)
  Don't extend the cable more than 10 meters (32ft)

 © 2022 Mitsubishi Electric Trane HVAC US LLC. All rights reserved.

Recommended circuit

Wiring diagram

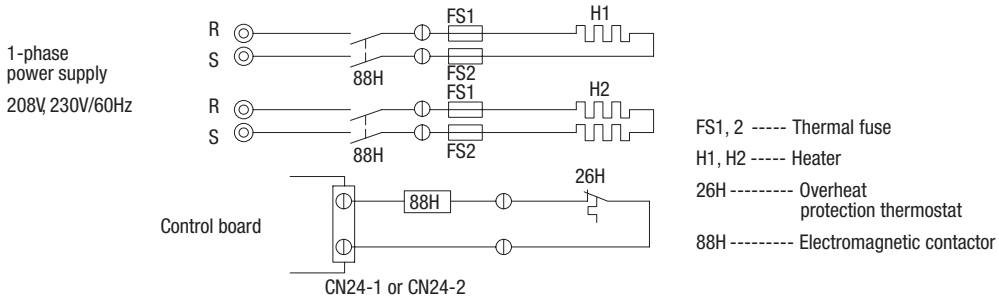

(4) Wiring restrictions

- Keep the length of the cable connecting to the circuit board of the indoor unit shorter than 10 meters (32 ft).
- Longer than 10 meters (32 ft) could cause improper operation.
- Use a transit relay when extending wiring such as remote wiring.

 © 2022 Mitsubishi Electric Trane HVAC US LLC. All rights reserved.

10. HUMIDIFIER CONTROL SPECIFICATIONS

10.1. Humidistat Control

Sequence of operation:

1. The humidistat closes CNF
2. The fan starts on high
3. CN25 provides 12VDC to turn on the Humidifier
   (do not exceed 1 Watt draw per relay)
4. When the Humidistat opens, the fan continues to run for
   30 seconds to clear the ductwork of moist air
5. If defrost starts during humidifier operation
   CN25 de-energizes

Humidistat:

- Non-Voltage a-contact input
- Contact rating voltage >=15VDC
- Contact Rating Current >= 0.1 A

The below table shows how the field-installed humidifier and fan speed are controlled.

Mode (function) No.		Humidistat output	Condition (no defrost/no error)	CN25 output	Fan speed
Wired remote controller (RF thermostat)					
13 (113)	16 (116)	CNF input			
2	1[1]	OFF	Heat operation & Thermo OFF	OFF	RC setting
			Heat operation & Thermo ON		
		ON	Heat operation & Thermo OFF	OFF	RC setting
			Heat operation & Thermo ON	ON	High
	2	OFF	Heat operation & Thermo OFF	OFF	RC setting
			Heat operation & Thermo ON		
		ON	Heat operation & Thermo OFF	ON	High
			Heat operation & Thermo ON		
1	-	-	No humidifier operation	OFF	RC setting

[1] Factory Settings

RC: Remote controller

The fan continues to run for 30 seconds after the humidifier stops.

 © 2022 Mitsubishi Electric Trane HVAC US LLC. All rights reserved.

10.2. Installation

A basic connection method is shown below.

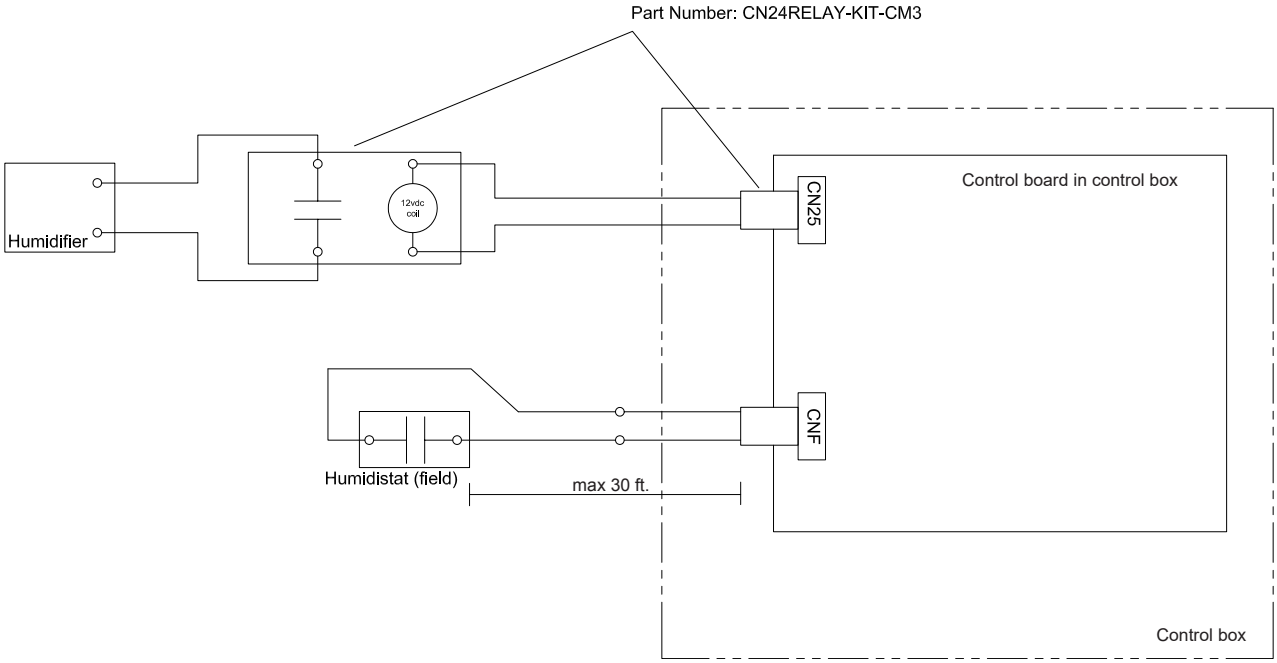

 © 2022 Mitsubishi Electric Trane HVAC US LLC. All rights reserved.

11. ERV CONTROL SPECIFICATIONS

11.1. ERV Control

Sequence of operation:

1. The ERV demand switch closes CNER
2. 12VDC is provided to CN2C to turn on ERV
3. If the unit goes into defrost, CN2C stops 12VDC output

ERV Switch:

- Non-Voltage a-contact input
- Contact rating voltage >= 15VDC
- Contact rating current >= 0.1 A

ERV output CNER input	Function Mode26	Condition	Fan speed	CN2C output (=Fan output)
OFF	-	Cool/Heat/Fan operation	RC setting	ON
		Defrost	STOP	OFF
		STOP	STOP	OFF
ON	"1"[1]	Cool/Heat/Fan operation	RC setting	ON
		Defrost	STOP	OFF
		STOP	STOP	OFF
	"2"	Cool/Heat/Fan operation	RC setting	ON
		Defrost	STOP	OFF
		STOP	RC setting[2, 3]	ON

[1] Factory setting.

[2] When fan speed setting by RC is "Auto", Fan speed is fixed to "HIGH".

[3] If ERV control is effective when STOP, IDU doesn’t report fan status or PB error (Fan motor error).

RC: Remote controller

 © 2022 Mitsubishi Electric Trane HVAC US LLC. All rights reserved.

11.2. Installation

A basic connection method is shown below.

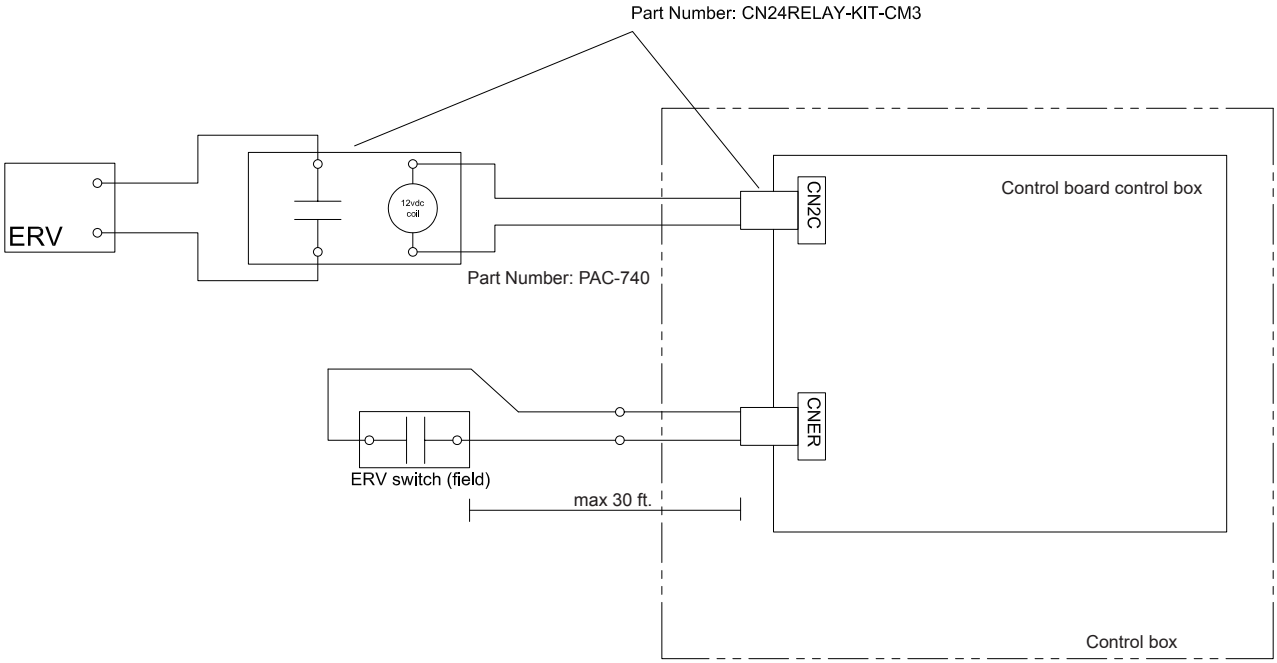

 © 2022 Mitsubishi Electric Trane HVAC US LLC. All rights reserved.

12. TROUBLESHOOTING

12.1. Cautions on troubleshooting

CAUTION

(1) Before troubleshooting, check the following:

1. Check the power supply voltage.
2. Check the indoor/outdoor connecting wire for miswiring.

CAUTION

(2) Take care of the following during servicing.

1. Before servicing the air conditioner, be sure to turn off the remote controller first to stop the main unit, and then turn off the breaker.
2. When removing the indoor controller board, hold the edge of the board with care NOT to apply stress on the components.
3. When connecting or disconnecting the connectors, hold the housing of the connector. DO NOT pull the lead wires.

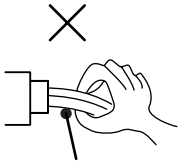

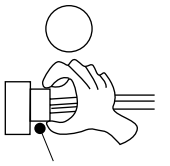

 © 2022 Mitsubishi Electric Trane HVAC US LLC. All rights reserved.

12.2. Self-check function, Function Table

- Refer to the installation manual that comes with each remote controller for details.
- RF thermostat is not established.

[Output pattern A] Errors detected by indoor unit

IR wireless remote controller	Wired remote controller RF thermostat	Symptom	Remark
Beeper sounds/OPERATION INDICATOR lamp flashes (Number of times)	Check code		
1	P1	Intake sensor error	
2	P2, P9	Pipe (Liquid or 2-phase pipe) sensor error	
3	E6, E7	Indoor/outdoor unit communication error	
4	P4	Drain sensor error	
5	P5	Drain pump error	
6	P6	Freezing/Overheating safeguard operation	
7	EE	Communication error between indoor and outdoor units	
8	P8	Pipe temperature error	
9	E4	Remote controller signal receiving error	
10	–	–	
11	PB	Fan motor error	
12	Fb	Indoor unit control system error (memory error, etc.)	
No sound	—	No corresponding	

[Output pattern B] Errors detected by unit other than indoor unit (outdoor unit, etc.)

IR wireless remote controller	Wired remote controller RF thermostat	Symptom	Remark
Beeper sounds/ OPERATION INDICATOR lamp flashes (Number of times)	Check code		
1	E9	Indoor/outdoor unit communication error (Transmitting error) (Outdoor unit)	For details, check the LED display of the outdoor controller board.
2	UP	Compressor overcurrent interruption	
3	U3, U4	Open/short of outdoor unit thermistors	
4	UF	Compressor overcurrent interruption (When compressor locked)	
5	U2	Abnormal high discharging temperature/49˚ C worked/ insufficient refrigerant	
6	U1, Ud	Abnormal high pressure (63H worked)/ Overheating safe-guard operation	
7	U5	Abnormal temperature of heat sink	
8	U8	Outdoor unit fan protection stop	

 © 2022 Mitsubishi Electric Trane HVAC US LLC. All rights reserved.

IR wireless remote controller	Wired remote controller RF thermostat	Symptom	Remark
Beeper sounds/ OPERATION INDICATOR lamp flashes (Number of times)	Check code		
9	U6	Compressor overcurrent interruption/Abnormal of power module	
10	U7	Abnormality of super heat due to low discharge temperature	
11	U9, UH	Abnormalities such as overvoltage or voltage shortage and abnormal synchronous signal to main circuit/Current sensor error	
12	–	–	
13	–	–	
14	Others	Other errors (Refer to the technical manual for the outdoor unit.)	

*1 If the beeper does not sound again after the initial two beeps to confirm the self-check start signal was received and the OPERATION INDICATOR lamp does not come on, there are no error records.

*2 If the beeper sounds three times continuously “beep, beep, beep (0.4 + 0.4 + 0.4 sec.)” after the initial two beeps to confirm the self-check start signal was received, the specified refrigerant address is incorrect.

- On IR wireless remote controller
  The continuous buzzer sounds from receiving section of indoor unit.
  Blink of operation lamp
- On wired remote controller
  Check code displayed on the LCD.
- If the unit cannot be operated properly after the above test run has been performed, refer to the following table to remove the cause.

Symptom			Cause
Wired remote controller		LED 1, 2 (PCB in outdoor unit)	
PLEASE WAIT	For about 2 minutes following power-on	After LED 1, 2 are lighted, LED 2 is turned off, then only LED 1 is lighted. (Correct operation)	• For about 2 minutes after power-on, operation of the remote controller is not possible due to system start-up. (Correct operation)
PLEASE WAIT → Error code	After about 2 minutes has expired following power-on	Only LED 1 is lighted. → LED 1, 2 blink.	• Connector for the outdoor unit’s protection device is not connected. • Reverse or open phase wiring for the outdoor unit’s power terminal block (L1, L2, L3)
Display messages do not appear even when operation switch is turned ON (operation lamp does not light up).		Only LED 1 is lighted. → LED 1, 2 blinks twice, LED 2 blinks once.	• Incorrect wiring between indoor and outdoor units(incorrect polarity of S1, S2, S3) • Remote controller wire short

On the IR wireless remote controller with conditions above, following phenomena takes place.

- No signals from the remote controller are accepted.
- OPE lamp is blinking.

 © 2022 Mitsubishi Electric Trane HVAC US LLC. All rights reserved.

- The buzzer makes a short ping sound.

NOTE
Operation is not possible for about 30 seconds after cancellation of function selection. (Correct operation)

For description of each LED (LED 1, 2, 3) provided on the indoor controller, refer to the following table.

LED 1 (power for microcomputer)	Indicates whether control power is supplied. Make sure that this LED is always lit.
LED 2 (power for remote controller)	Indicates whether power is supplied to the remote controller. This LED lights only in the case of the indoor unit which is connected to the outdoor unit refrigerant address “0”.
LED 3 (communication between indoor and outdoor units)	Indicates state of communication between the indoor and outdoor units. Make sure that this LED is always blinking.

AUTO RESTART FUNCTION

Indoor controller board

This model is equipped with the AUTO RESTART FUNCTION.

When the indoor unit is controlled with the remote controller, the operation mode, set temperature, and the fan speed are memorized by the indoor controller board.

The auto restart function sets to work the moment the power has restored after power failure, then, the unit will restart automatically.

Set the AUTO RESTART FUNCTION using the wireless remote controller. (Mode no.1).

 © 2022 Mitsubishi Electric Trane HVAC US LLC. All rights reserved.

Function Table

Mode	Settings	Mode (function) No. Wired remote controller (RF thermostat)	Setting no.	Initial setting	Check
Power failure auto restart	Not available	01 (101)	1	1	
	Available		2		
Indoor temperature detecting	Indoor unit operating average	02 (-)	1	1	
	Set by indoor unit's remote controller		2		
	Remote controller's internal sensor		3		
LOSSNAY connectivity	Not Supported	03 (103)	1	1	
	Supported (indoor unit is not equipped with outdoor air intake		2		
	Supported (indoor unit is equipped with outdoor air intake		3		
Power voltage	240V (230V)	04 (104)	1	1	
	220V (208V)		2		
Filter sign	100 Hr	07 (107)	1	3	
	2500 Hr		2		
	"No filter sign indicator"		3		
External static pressure	See Section 14.4 of the installation manual	08 (108)	1	2	
			2		
			3		
		10 (110)	1	1	
			2		
Humidifier control	Heat operation & Thermo ON	16 (116)	1	1	
	Heat operation		2		
Humidifier	Humidifier Not present	13 (113)	1	1	
	Humidifier Present		2		
Heater Control	Heater Not Present	11 (111)	1	1	
	Heater Present *1		2		
Heater control during defrost and error	Disable heater during Defrost and Error	23 (123)	1	1	
	Enable heater and fan during Defrost and Error *2		2		
Fan speed thermo off heating	Extra low	25 (125)	1	1	
	Stop		2		
	RC setting		3		
Fan speed thermo off cooling	RC setting	27 (127)	1	1	
	Stop		2		

*1 While the heater is on, the fan will operate at high speed regardless of the fan setting on the remote controller.

*2 Heater will not operate during all error modes. Heater will only operate during a communication error between indoor unit and outdoor unit.

NOTE

When CN4Y is used, the fan is off when CN24 is energized, which is only for use with supplemental heat that is not in the duct.

 © 2022 Mitsubishi Electric Trane HVAC US LLC. All rights reserved.

12.3. Self-diagnosis action table

Error Code	Abnormal point and detection method	Cause	Countermeasure
P1	**Room temperature thermistor (TH1)** 1. The unit is in three-minute resume prevention mode if short/open of thermistor is detected. Abnormal if the unit does not reset normally after three minutes. (The unit returns to normal operation, if it has normally reset.) 2. Constantly detected during cooling, drying and heating operation Short: 90˚C[194˚F] or more Open: -40˚C[-40˚F] or less	1. Defective thermistor characteristics 2. Contact failure of connector (CN20) on the indoor controller board (Insert failure) 3. Breaking of wire or contact failure of thermistor wiring 4. Defective indoor controller board	1–3. Check resistance value of thermistor. 0˚C[32˚F].....15.0kΩ 10˚C[50˚F].....9.6kΩ 20˚C[68˚F].....6.3kΩ 30˚C[86˚F].....4.3kΩ 40˚C[104˚F]...3.0kΩ If you put force on (draw or bend) the lead wire with measuring resistance value of thermistor breaking of wire or contact failure can be detected. 2. Check contact failure of connector (CN20) on the indoor controller board. Refer to 12-5. Turn the power on again and check restart after inserting connector again. 4. Check room temperature display on remote controller. Replace indoor controller board if there is abnormal difference with actual room temperature. Turn the power off, and on again to operate after check.
P2	**Pipe temperature thermistor/Liquid (TH2)** 1. The unit is in three-minute resume prevention mode if short/open of thermistor is detected. Abnormal if the unit does not reset normally after three minutes. (The unit returns to normal operation, if it has normally reset.) 2. Constantly detected during cooling, drying, and heating (except defrosting) operation. Short: 90˚C[194˚F] or more Open: -40˚C[-40˚F] or less	1. Defective thermistor characteristics 2. Contact failure of connector (CN44) on the indoor controller board (Insert failure) 3. Breaking of wire or contact failure of thermistor wiring 4. Defective refrigerant circuit is causing thermistor temperature of 90˚C[194˚F] or more or -40˚C[-40˚F] or less. 5 Defective indoor controller board	1–3. Check resistance value of thermistor. For characteristics, refer to (P1) above. 2. Check contact failure of connector (CN44) on the indoor controller board. Refer to 12-5. Turn the power on again and check restart after inserting connector again. 4. Check pipe <liquid> temperature with remote controller in test run mode. If pipe<liquid> temperature is extremely low (in cooling mode) or high (in heating mode), refrigerant circuit may have defective. 5. Check pipe <liquid> temperature with remote controller in test run mode. If there is extreme difference with actual pipe <liquid> temperature, replace indoor controller board. Turn the power off, and on again to operate after check.
P4 (5701)	Contact failure of drain float switch (CN4F) 1. Extract when the connector of drain float switch is disconnected. (3 and 4 of connector CN4F is not short-circuited.) 2. Constantly detected during operation.	1. Contact failure of connector (Insert failure) 2. Defective indoor controller board	1. Check contact failure of float switch connector. Turn the power on again and check after inserting connector again. 2. Operate with connector (CN4F) short-circuited. Refer to 12-5. Replace indoor controller board if abnormality reappears.

 © 2022 Mitsubishi Electric Trane HVAC US LLC. All rights reserved.

Error Code	Abnormal point and detection method	Cause	Countermeasure
P6	**Freezing/overheating protection is working** 1. Freezing protection (Cooling mode) The unit is in six-minute resume prevention mode if pipe <liquid or condenser/evaporator> temperature stays under -15˚C[5˚F] for three minutes after the compressor started. Abnormal if it stays under -15˚C[5˚F] for three minutes again within 16 minutes after six-minute resume prevention mode. 2. Overheating protection (Heating mode) The units is in six-minute resume prevention mode if pipe <Liquid or condenser / evaporator>temperature is detected as over 70˚C[158˚F] after the compressor started. Abnormal if the temperature of over 70˚C[158˚F] is detected again within 10 minutes after six-minute resume prevention mode.	(Cooling or drying mode) 1. Clogged filter (reduced airflow) 2. Short cycle of air path 3. Low-load (low temperature) operation beyond the tolerance range 4. 4 Defective indoor fan motor • Fan motor is defective. • Indoor controller board is defective. 5. Defective outdoor fan control 6. Overcharge of refrigerant 7. Defective refrigerant circuit (clogs) (Heating mode) 1. Clogged filter (reduced airflow) 2. Short cycle of air path 3. Over-load (high temperature) operation beyond the tolerance range 4. Defective indoor fan motor • Fan motor is defective. • Indoor controller board is defective. 5. Defective outdoor fan control 6. Overcharge of refrigerant 7. 7 Defective refrigerant circuit (clogs) 8. Bypass circuit of outdoor unit is defective	(Cooling or drying mode) 1. Check clogging of the filter 2. Remove shields 4. Refer to 12-8. DC Fan motor (FAN MOTOR/ INDOOR CONTROLLER BOARD) 5. Check outdoor fan motor 6~7. Check operating condition of refrigerant circuit. (Heating mode) 1. Check clogs of the filter 2. Remove shields 4. Refer to 12-8. DC Fan motor (FAN MOTOR/ INDOOR CONTROLLER BOARD) 5. Check outdoor fan motor 6~8. Check operating condition of refrigerant circuit

 © 2022 Mitsubishi Electric Trane HVAC US LLC. All rights reserved.

Error Code	Abnormal point and detection method	Cause	Countermeasure
P8	Pipe temperature <Cooling mode> Detected as abnormal when the pipe temperature is not in the cooling range 3 minutes after compressor start and 6 minutes after the liquid or condenser/evaporator pipe is out of cooling range. **NOTE** 1) It takes at least 9 minutes. to detect. 2) Abnormality P8 is not detected in drying mode. Cooling range : -3˚C(-5.4˚F)] (TH-TH1) TH: Lower temperature between: liquid pipe temperature (TH2) and condenser/evaporator temperature (TH5) TH1: Intake temperature <Heating mode> When 10 seconds have passed after the compressor starts operation and the hot adjustment mode has finished, the unit is detected as abnormal when condenser/evaporator pipe temperature is not in heating range within 20 minutes. **NOTE** 3) It takes at least 27 minutes to detect abnormality. 4) It excludes the period of defrosting (Detection restarts when defrosting mode is over) Heating range : 3˚C(5.4˚F) [(TH5-TH1)	1. Slight temperature difference between indoor room temperature and pipe <liquid or condenser / evaporator> temperature thermistor • Shortage of refrigerant • Disconnected holder of pipe <liquid or condenser / evaporator> thermistor • Defective refrigerant circuit 2. Converse connection of extension pipe (on plural units connection) 3. Converse wiring of indoor/ outdoor unit connecting wire (on plural units connection) 4. Defective detection of indoor room temperature and pipe <condenser / evaporator> temperature thermistor 5. Stop valve is not opened completely	1~4. Check pipe <liquid or condenser / evaporator> temperature with room temperature display on remote controller and outdoor controller circuit board. Conduct temperature check with outdoor controller circuit board after connecting 'A-Control Service Tool(PAC-SK52ST)'. 2~3. Check converse connection of extension pipe or converse wiring of indoor/outdoor unit connecting wire.
P9	Abnormality of pipe temperature thermistor / Condenser-Evaporator (TH5) 1. The unit is in three-minute resume protection mode if short/open of thermistor is detected. Abnormal if the unit does not get back to normal within three minutes. (The unit returns to normal operation, if it has normally reset.) 2. 2 Constantly detected during cooling, drying, and heating operation (except defrosting) Short: 90˚C[194˚F] or more Open: -40˚C[-40˚F] or less	1. Defective thermistor characteristics 2. Contact failure of connector (CN44) on the indoor controller board (Insert failure) 3. Breaking of wire or contact failure of thermistor wiring 4. Temperature of thermistor is 90:[194˚F] or more or -40˚C[-40˚F] or less caused by defective refrigerant circuit 5. Defective indoor controller board	1–3. Check resistance value of thermistor. For characteristics, refer to (P1) above. 2. Check contact failure of connector (CN44) on the indoor controller board. Refer to 12-5. Turn the power on and check restart after inserting connector again. 4. Operate in test run mode and check pipe <condenser / evaporator>temperature. If pipe <condenser / evaporator> temperature is extremely low (in cooling mode) or high (in heating mode), refrigerant circuit may have defect. 5. When no problems are found in 1–4 above, replace the indoor unit control board.

 © 2022 Mitsubishi Electric Trane HVAC US LLC. All rights reserved.

Error Code	Abnormal point and detection method	Cause	Countermeasure
E0 or E4	**Remote controller transmission error(E0)/signal receiving error(E4)** 1. Abnormal if main or sub remote controller can not receive normally any transmission from indoor unit of refrigerant address “0” for three minutes. (Error code : E0) 2. Abnormal if sub remote controller could not receive for any signal for two minutes. (Error code: E0) 1. Abnormal if indoor controller board can not receive normally any data from remote controller board or from other indoor controller board for three minutes. (Error code: E4) 2. Indoor controller board cannot receive any signal from remote controller for two minutes. (Error code: E4)	1. Contact failure at transmission wire of remote controller 2. All remote controllers are set as “sub” remote controller. In this case, E0 is displayed on remote controller, and E4 is displayed at LED (LED1, LED2) on the outdoor controller circuit board. 3. Mis-wiring of remote controller 4. Defective transmitting receiving circuit of remote controller 5. Defective transmitting receiving circuit of indoor controller board of refrigerant address “0” 6. Noise has entered into the transmission wire of remote controller	1. Check disconnection or looseness of indoor unit or transmission wire of remote controller. 2. Set one of the remote controllers “main”. If there is no problem with the action above. 3. Check wiring of remote controller. • Total wiring length: max.500m (Do not use cable 5 3 or more) • The number of connecting indoor units: max.16units • The number of connecting remote controller: max.2units When it is not the above-mentioned problem of 1~3 4. Diagnose remote controllers. a) When “RC OK” is displayed, Remote controllers have no problem. Turn the power off, and on again to check. If abnormality generates again, replace indoor controller board. b) When “RC NG” is displayed, Replace remote controller. c) When “RC E3” is displayed, d) When “ERC 00-06” is displayed, **[** c),d)→Noise may be causing abnormality. **]** ∗ If the unit is not normal after replacing indoor controller board in group control, indoor controller board of address “0” may be abnormal.
E3 or E5	**Remote controller transmission error(E3)/signal receiving error(E5)** 1. Abnormal if remote controller could not find blank of transmission path for six seconds and could not transmit. (Error code: E3) 2. Remote controller receives transmitted data at the same time, compares the data, and when detecting it, judges different data to be abnormal 30 continuous times. (Error code: E3) 1. Abnormal if indoor controller board could not find blank of transmission path. (Error code: E5) 2. 2 Indoor controller board receives transmitted data at the same time, compares the data,and when detecting it, judges different data to be abnormal 30 continuous times. (Error code: E5)	1. Two remote controller are set as “main.” (In case of 2 remote con- trollers) 2. Remote controller is connected with two indoor units or more 3. Repetition of refrigerant address 4. 4 Defective transmitting receiving circuit of remote controller 5. Defective transmitting receiving circuit of indoor controller board 6. Noise has entered into transmission wire of remote controller.	1. Set a remote controller to main, and the other to sub 2. Remote controller is connected with only one indoor unit 3. The address changes to a separate setting 4~6. Diagnose remote controller a) When “RC OK”is displayed, remote controllers have no problem. Turn the power off,and on again to check. When becoming abnormal again, replace indoor controller board. b) When “RC NG”is displayed, replace remote controller. c) When “RC E3”or “ERC 00-66”is displayed, noise may be causing abnormality.
E6	Indoor/outdoor unit communication error (Signal receiving error) 1. Abnormal if indoor controller board cannot receive any signal normally for six minutes after turning the power on. 2. Abnormal if indoor controller board cannot receive any signal normally for three minutes. 3. Consider the unit as abnormal under the following condition: When two or more indoor units are connected to an outdoor unit, indoor controller board cannot receive a signal for three minutes from outdoor controller circuit board, a signal which allows outdoor controller circuit board to transmit signals.	1. Contact failure, short circuit or, mis-wiring (converse wiring) of indoor/outdoor unit connecting wire 2. Defective transmitting receiving circuit of indoor controller board 3. Defective transmitting receiving circuit of indoor controller board 4. Noise has entered into indoor/ outdoor unit connecting wire	∗ Check LED display on the outdoor control circuit board. (Connect A-control service tool, PAC-SK52ST.) Refer to EA-EC item if LED displays EA-EC. 1. Check disconnection or looseness of indoor/ outdoor unit connecting wire of indoor unit or outdoor unit. Check all the units in case of twin triple indoor unit system. 2~4. Turn the power off, and on again to check. If abnormality generates again, replace indoor controller board or outdoor controller circuit board. ∗ Other indoor controller board may have defect in case of twin triple indoor unit system.

 © 2022 Mitsubishi Electric Trane HVAC US LLC. All rights reserved.

Error Code	Abnormal point and detection method	Cause	Countermeasure
E7	**Indoor/outdoor unit communication error (Transmitting error)** Abnormal if “1” receiving is detected 30 times continuously though indoor controller board has transmitted “0”.	1. Defective transmitting receiving circuit of indoor controller board 2. Noise has entered into power supply 3. Noise has entered into outdoor control wire	1~3. Turn the power off, and on again to check. If abnormality generates again, replace indoor controller board.
Fb	**Indoor controller board** Abnormal if data cannot be read normally from the nonvolatile memory of the indoor controller board.	1. Defective indoor controller board	1. Replace indoor controller board.
E1 or E2	**Remote controller control board** 1. Abnormal if data cannot be read normally from the nonvolatile memory of the remote controller control board. (Error code: E1) 2. Abnormal if the clock function of remote controller cannot be operated normally. (Error code: E2)	1. Defective remote controller	1. Replace indoor controller board.
PB	**Fan motor error** Abnormal if a) or b) is detected during fan motor operation. a) When the number of rotations is detected to be below the lower limit for 30 seconds. b) When the number of rotations is detected to be above the upper limit for 30 seconds.	1. Motor or fan cannot rotate because of foreign object, etc. 2. Motor wire disconnection or connector disconnection or looseness 3. Motor failure	1. Remove the foreign object causing the problem. 2. Check disconnection of the motor wiring or connector disconnection. 3. Replace the failed motor.

 © 2022 Mitsubishi Electric Trane HVAC US LLC. All rights reserved.

12.4. Troubleshooting by inferior phenomena

Phenom-ena	Cause	Countermeasure
(1) LED2 on indoor controller board is off.	• When LED1 on indoor controller board is also off. 1. Power supply of rated voltage is not supplied to outdoor unit 2. Defective outdoor controller circuit board 3. Power supply of 208~230V is not supplied to indoor unit 4. Defective indoor controller board	1. Check the voltage of outdoor power supply terminal block (L, N) or (L3, N). • When AC 208~230V is not detected. Check the power wiring to outdoor unit and the breaker. • When AC 208~230V is detected. – Check 2 (below) 2. Check the voltage between outdoor terminal block S1 and S2. • When AC 208~230V is not detected. Check the fuse on outdoor controller circuit board. Check the wiring connection. • When AC 208~230V is detected. – Check 3 (below) 3. Check the voltage between indoor terminal block S1 and S2. • When AC 208~230V is not detected. Check indoor/outdoor unit connecting wire for mis-wiring. • When AC 208~230V is detected. – Check 4 (below) 4. Check the fuse on indoor controller board. Check the wiring connection. If no problem are found, indoor controller board is defective.
(2) LED2 on indoor controller board is blinking.	• When LED1 on indoor controller board is also blinking. Connection failure of indoor/outdoor unit connecting wire. • When LED1 is lit. 1. Mis-wiring of remote controller wires Under twin triple indoor unit system, 2 or more indoor units are wired together. 2. Refrigerant address for outdoor unit is wrong or not set. Under grouping control system, there are some units whose refrigerant address is 0. 3. Short-cut of remote controller wires 4 Defective remote controller.	Check indoor/outdoor unit connecting wire for connection failure. 1. Check the connection of remote controller wires in case of twin triple indoor unit system. When 2 or more indoor units are wired in one refrigerant system, connect remote controller wires to one of those units. 2. Check the setting of refrigerant address in case of grouping control system. If there are some units whose refrigerant addresses are 0 in one group, set one of the units to 0 using SW1 (3-6) on outdoor controller circuit board. 3~4. Remove remote controller wires and check LED2 on indoor controller board. • When LED2 is blinking, check the short-cut of remote controller wires. • When LED2 is lit, connect remote controller wires again and: if LED2 is blinking, remote controller is defective; if LED2 is lit, connection failure of remote controller terminal block etc. has returned to normal.

 © 2022 Mitsubishi Electric Trane HVAC US LLC. All rights reserved.

12.5. Test point diagram

12.5.1. Power supply board

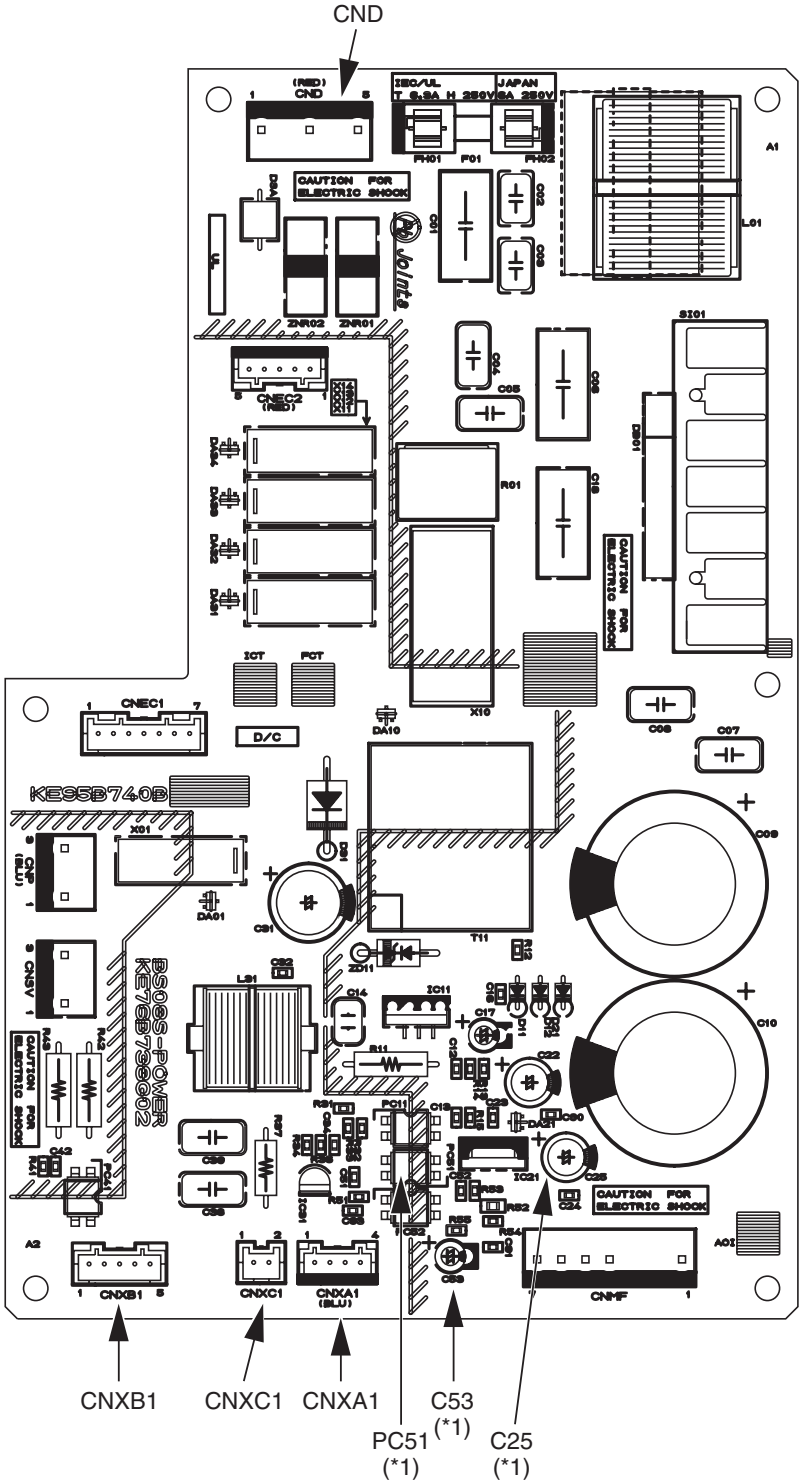

CND Power supply voltage (208 - 230VAC)

CNXA1
Connect to the indoor controller board

CNXB1
Connect to the indoor controller board

CNXC1
Connect to the indoor controller board

CNXA2
Connect to the indoor power board

CNXB2
Connect to the indoor power board

CNXC2
Connect to the indoor power board

(*1)

V_{FG} Voltage on the (-) side of PC51 and C25
(Same with the voltage between 7 (+) and 4 (-) of CNMF)

V_{CC} Voltage between the C25 pins 15 VDC
(Same with the voltage between 5 (+) and 4 (-) of CNMF)

V_{sp} Voltage between the C53 pins
0VDC (with the fan stopped)
1 - 6.5VDC (with the fan in operation)
(Same with the voltage between 6 (+) and 4 (-) of CNMF)

 © 2022 Mitsubishi Electric Trane HVAC US LLC. All rights reserved.

12.5.2. Indoor controller board

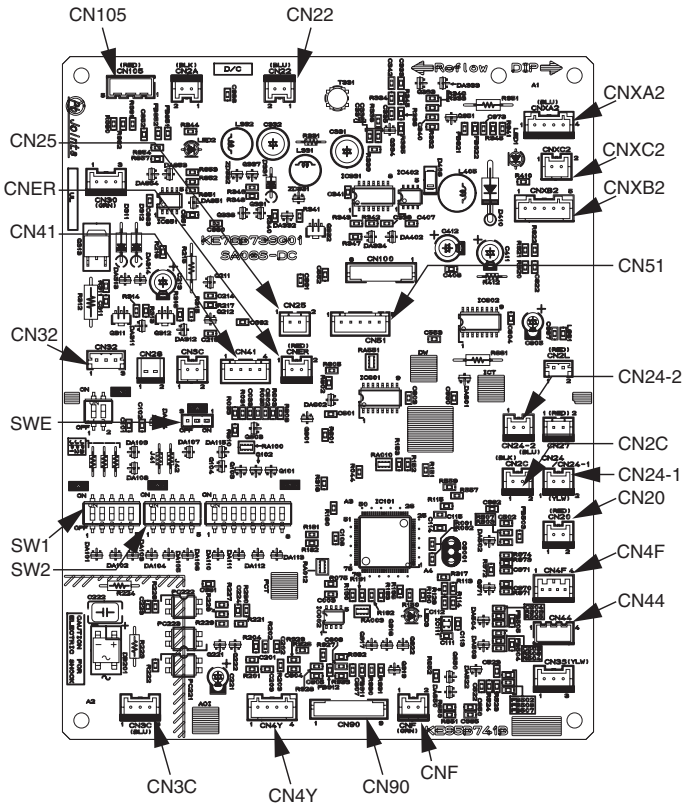

SWE Emergency operation

SW1 Model selection

SW2 Capacity setting

CN105 Radio frequency interface

CN32 Remote start/stop adapter

CN22 For MA remote controller cable connection (10 - 13 VDC)

CN51 Centralized control

CN41 JAMA standard HA terminal A

CN44 Thermistor (liquid/condenser/evaporator temperature)

CN4F Float sensor

CN20 Thermistor (Inlet temperature)

CN24-1
1st Heater control (12VDC)

CN24-2
2nd Heater control

CN4Y For fan control

CN3C Indoor-outdoor transmission (0 - 24VDC)

CN90 Wireless remote controller

CNXA2
Connect to the indoor controller board

CNXB2
Connect to the indoor controller board

CNXC2
Connect to the indoor controller board

CNXA1
Connect to the indoor power board

CNXB1
Connect to the indoor power board

CNXC1
Connect to the indoor power board

CNER
ERV controll

CN2C
ERV input

CN25
Humidity conrol

CNF
Humidity input

 © 2022 Mitsubishi Electric Trane HVAC US LLC. All rights reserved.

12.6. Trouble criterion of main parts

<table>
<tr><th>Part name</th><th>Check method and criterion</th></tr>
<tr><td>Room temperature thermistor (TH1)</td><td rowspan="3">Measure the resistance with a tester.
(Part temperature 10C (50F) ~ 30C (86F))
<table><tr><td>Normal</td><td>Abnormal</td></tr><tr><td>4.3k~9.6k</td><td>Opened or short-circuited</td></tr></table></td></tr>
<tr><td>Pipe temperature thermistor/liquid (TH2)</td></tr>
<tr><td>Condenser/evaporator temperature thermistor (TH5)</td></tr>
<tr><td>Wiring diagram</td><td> 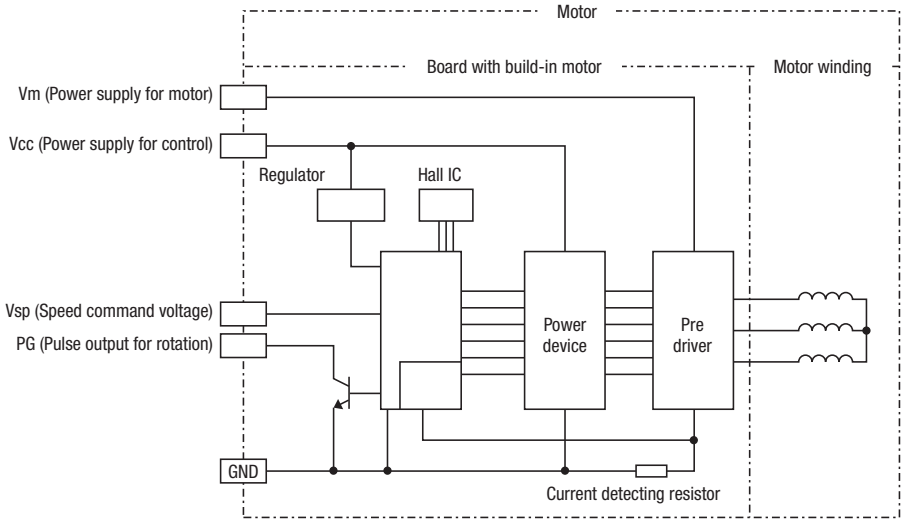
</td></tr>
</table>

 © 2022 Mitsubishi Electric Trane HVAC US LLC. All rights reserved.

12.7. Thermistor

<Thermistor Characteristic graph>

Thermistor for lower temperature	Room temperature thermistor (TH1) Pipe temperature thermistor (TH2) Condenser/evaporator temperature thermistor (TH5)

Thermistor R_0 = 15 kΩ ± 3%
Fixed number of B = 3480 kΩ ± 2%

$$Rt = 15\exp\left\{3480\left(\frac{1}{273+t} - \frac{1}{273}\right)\right\}$$

0°C	(32°F)	15 kΩ
10°C	(50°F)	9.6 kΩ
20°C	(68°F)	6.3 kΩ
25°C	(77°F)	5.2 kΩ
30°C	(86°F)	4.3 kΩ
40°C	(104°F)	3.0 kΩ

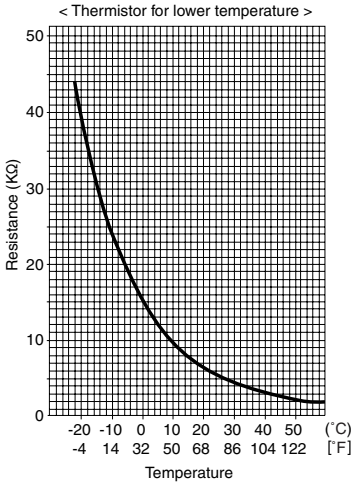

 © 2022 Mitsubishi Electric Trane HVAC US LLC. All rights reserved.

12.8. DC Fan motor (FAN MOTOR/INDOOR CONTROLLER BOARD)

Check method of DC fan motor (fan motor/indoor controller circuit board)

1 Notes
- · High voltage is applied to the connecter (CNMF) for the fan motor. Give attention to the service.
- · Do not pull out the connector (CNMF) for the motor with the power supply on.
  (It causes trouble of the indoor controller circuit board and fan motor.)

2 Self check
Symptom : The indoor fan cannot turn around.

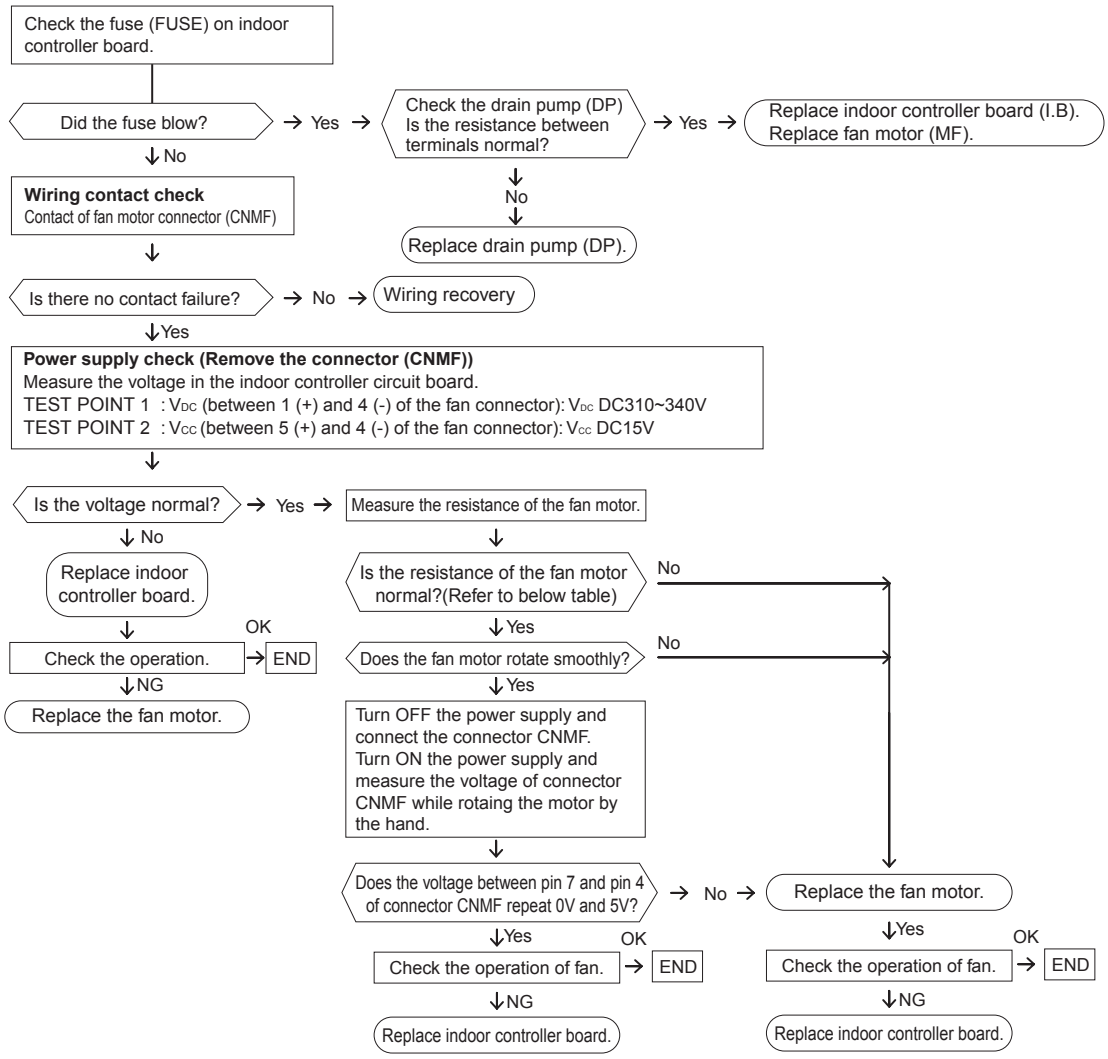

	SVZ-KP-NA
Measuring points	Resistance
pin 1 - pin 4	O.L.
pin 5 - pin 4	50kΩ
pin 6 - pin 4	150kΩ
pin 7 - pin 4	O.L.

*To measure the resistance, connect the negative (-) end of the tester to pin 4.

 © 2022 Mitsubishi Electric Trane HVAC US LLC. All rights reserved.

12.9. Functions of DIP switch and jumper wire

Each function is controlled by the dip switch and the jumper wire on control p.c. board. SW1 and SW2 are equipped only for service parts.

Model setting and capacity setting are memorized in the nonvolatile memory of the control p.c. board of the unit.

Jumper wire	Functions	Setting by the dip switch and jumper wire	Remarks
SW1	Model settings	For service board 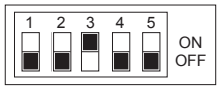 	
SW2	Capacity settings	MODELS / Service board NAXAMT12A112AA: 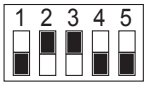 NAXAMT18A112AA: NAXAMT24A112AA: 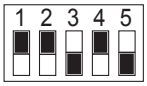 NAXAMT30A112AA: 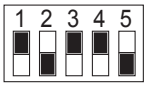 NAXAMT36A112AA: 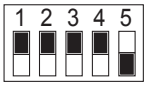 	
J41 J42	Pair number setting with wireless remote controller	Wireless remote controller setting / Control PCB setting J41 / J42 0: ○ ○ 1: X ○ 2: ○ X 3 ~ 9: X X	< Settings at time of factory shipment> Wireless remote controller: 0 Control PCB: ○ (for both J41 and J42) Four pair number settings are supported. The pair number settings of the wireless remote controller and indoor control PCB (J41/J42) are given in the table on the left. (' ' in the table indicates the jumper line is disconnected.)
JP1	Unit type setting	Model / JP1 Without TH5: ○ With TH5: X	There is no jumper (JP1) because these models have the cond./ eva. temperature thermistor (TH5).
JP3	Indoor controller board type setting	Indoor controller board type / JP3 Factory shipment: ○ Service parts: ○	

 © 2022 Mitsubishi Electric Trane HVAC US LLC. All rights reserved.

13. DISASSEMBLY PROCEDURE

13.1. Control box

CAUTION
Exercise caution when removing heavy parts.

1. Remove blower panel.	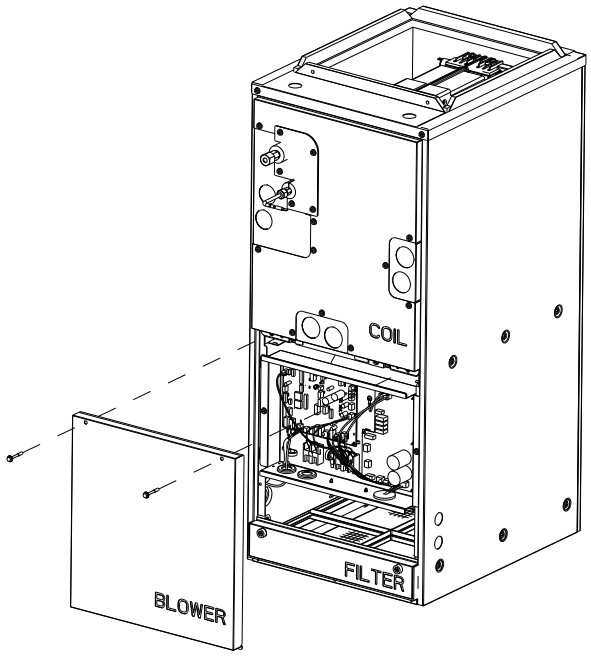 Fig. 1

 © 2022 Mitsubishi Electric Trane HVAC US LLC. All rights reserved.

13.2. Thermistor (Return Air)

CAUTION
Exercise caution when removing heavy parts.

1. Remove the Filter panel	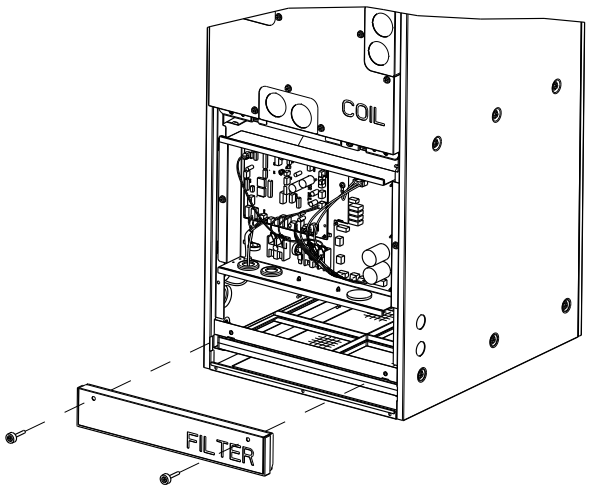 Fig. 2
3. Return air thermistor is located as shown in the image inside the control box and is connected to the control board on CN20.	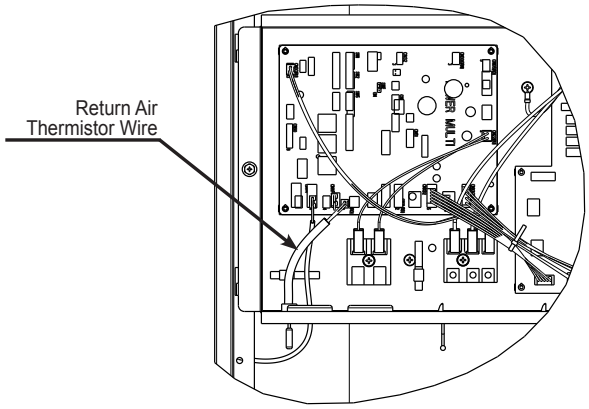 Fig. 3

 © 2022 Mitsubishi Electric Trane HVAC US LLC. All rights reserved.

13.3. Coil Assembly

CAUTION
Exercise caution when removing heavy parts.

1. Remove the Blower and Filter panel indicated in sections 1 and 2. 2. Remove the Coil panel by removing all of the screws securing it to the (3) smaller panels for refrigerant and drain lines.	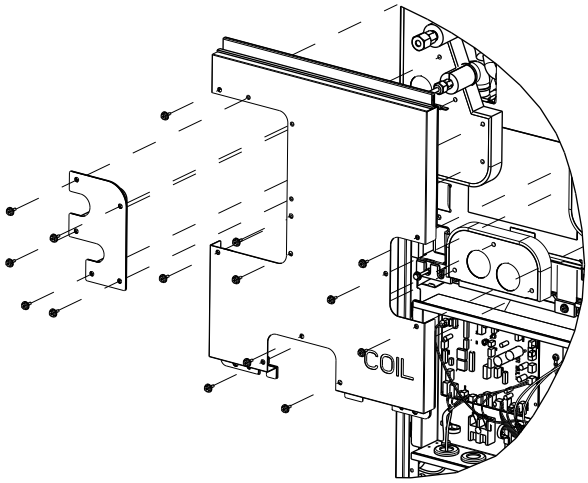 Fig. 4
3. Slide the smaller panels in the directions indicated and remove.	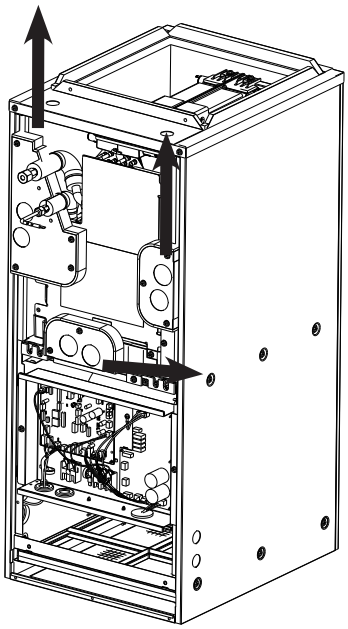 Fig. 5

 © 2022 Mitsubishi Electric Trane HVAC US LLC. All rights reserved.

4. Remove the (1 or 2) brackets that secure the coil, unplug the thermistors by separating the water proof connector in the coil area. Next, slide the coil from the frame.	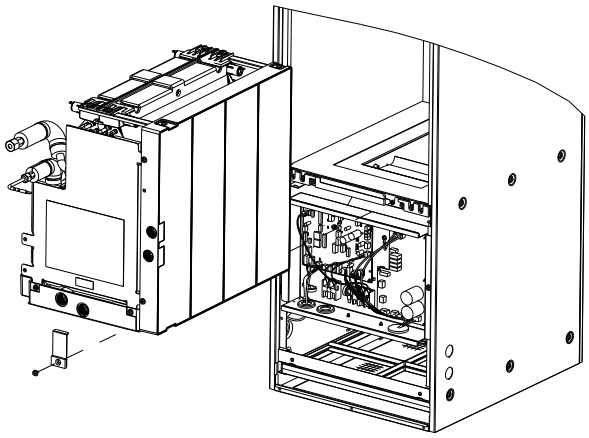 Fig. 6 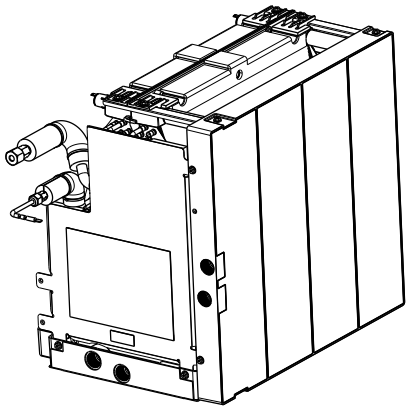 Fig. 7
5. Remove the plate covering the coil assembly to access the thermistors.	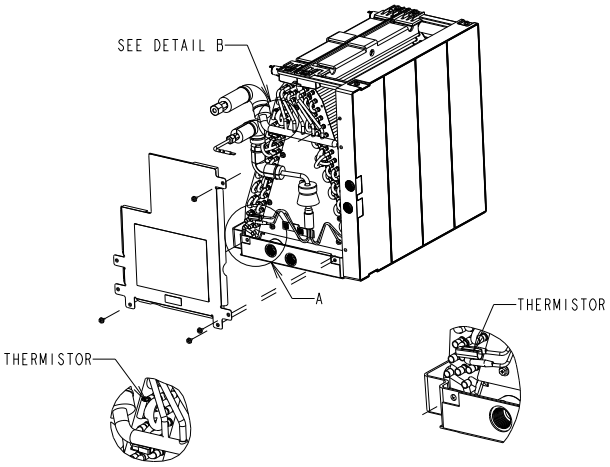 Fig. 8

 © 2022 Mitsubishi Electric Trane HVAC US LLC. All rights reserved.

6. Remove lower and side drain pan.	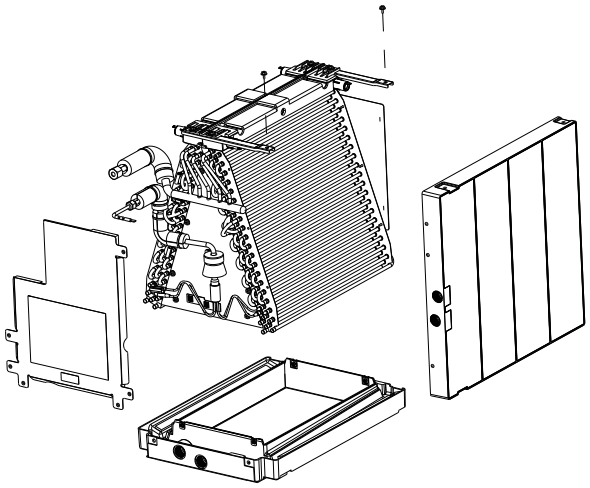 Fig. 9

 © 2022 Mitsubishi Electric Trane HVAC US LLC. All rights reserved.

13.4. Blower/Fan Assembly

CAUTION
Exercise caution when removing heavy parts.

1. Remove the Blower and Filter panel (along with filter if installed) indicated in section 2. 2. Remove the (1 or 2) brackets that secure the coil assembly.	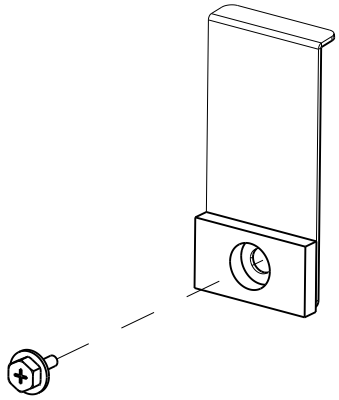 Fig. 10
3. Unplug CN44 and motor plug (CNMF) from control box. 4. Remove the (2) screws that secure the control box and then remove the control box.	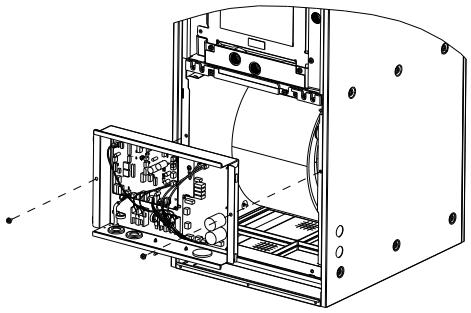 Fig. 11
5. Remove coil panel and smaller drain panel. 6. Remove the (2) screws that secure the fan assembly and slide out.	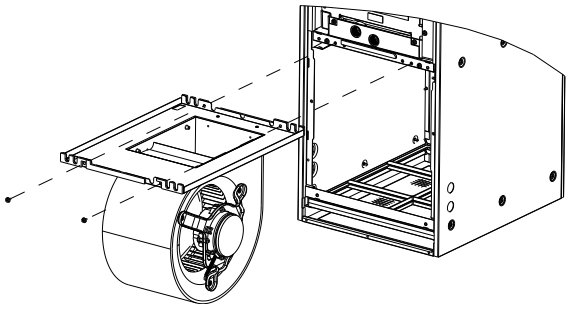 Fig. 12

 © 2022 Mitsubishi Electric Trane HVAC US LLC. All rights reserved.

This product is designed and intended for use in the residential, commercial and light-industrial environment.

Please be sure to put the contact address/telephone number on this manual before handing it to the customer.

MITSUBISHI ELECTRIC TRANE HVAC US LLC

Toll Free: 800-433-4822

MEUS DOC# MD-1404-K043 Ver.2 March 2022
Specifications are subject to change without notice.

© 2022 Mitsubishi Electric Trane HVAC US LLC. All rights reserved.