9 REFRIGERANT SYSTEM DIAGRAM

PUZ-A18NHA3(-BS)

Unit: mm (inch)

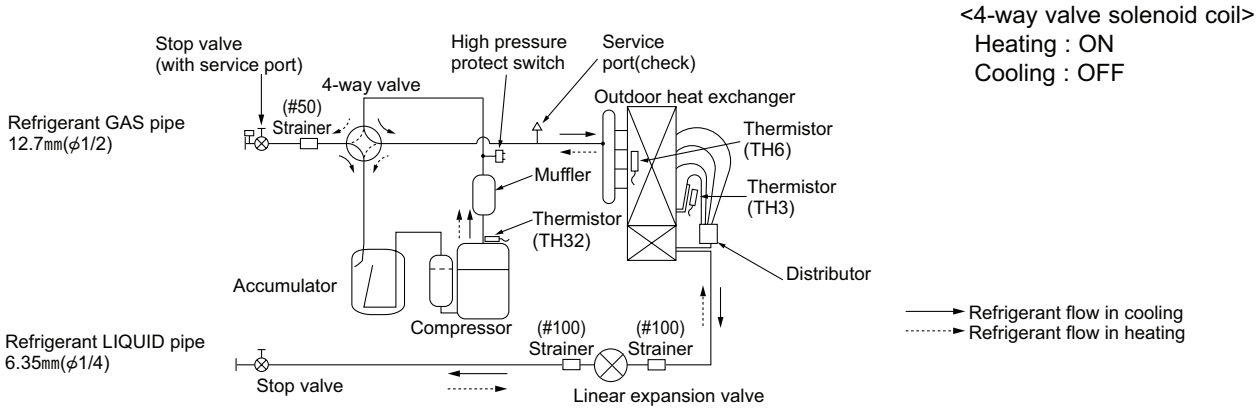

PUZ-A24NHA3(-BS) PUZ-A30NHA3(-BS) PUZ-A36NHA3(-BS)

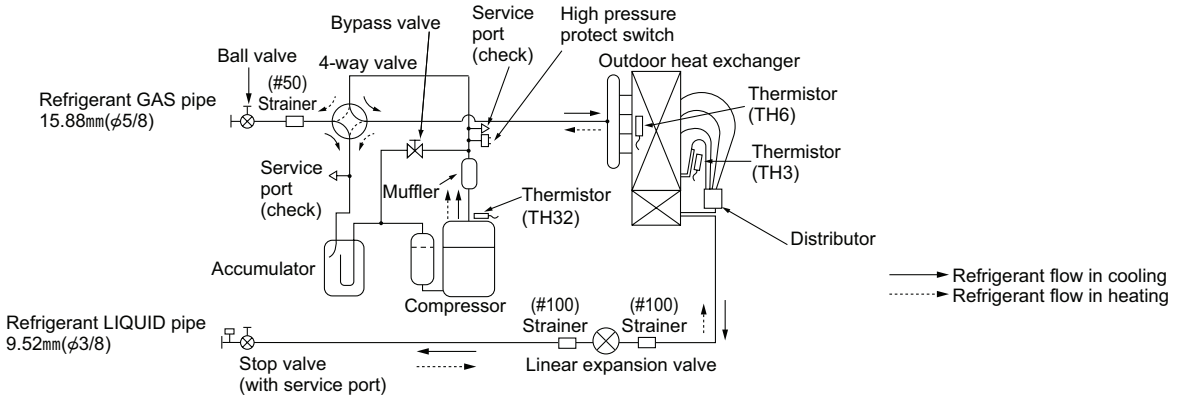

PUZ-A42NHA3(-BS)

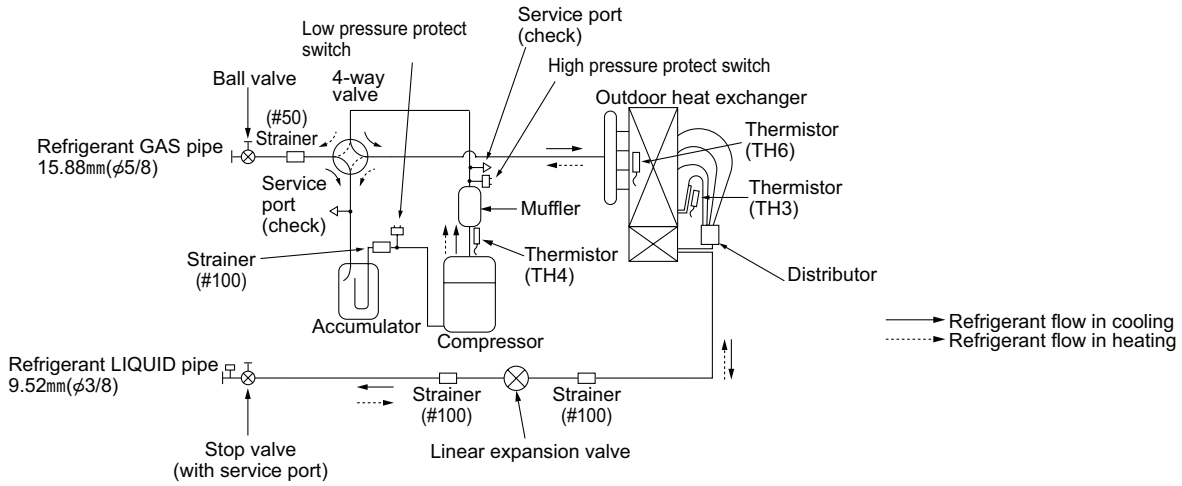

PUY-A12NHA3(-BS) PUY-A18NHA3(-BS)

Unit: mm (inch)

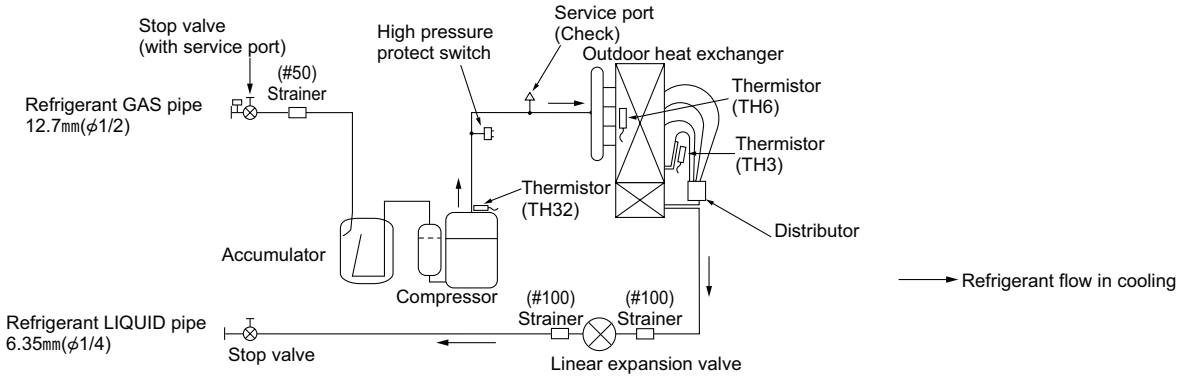

PUY-A24NHA3(-BS) PUY-A30NHA3(-BS) PUY-A36NHA3(-BS)

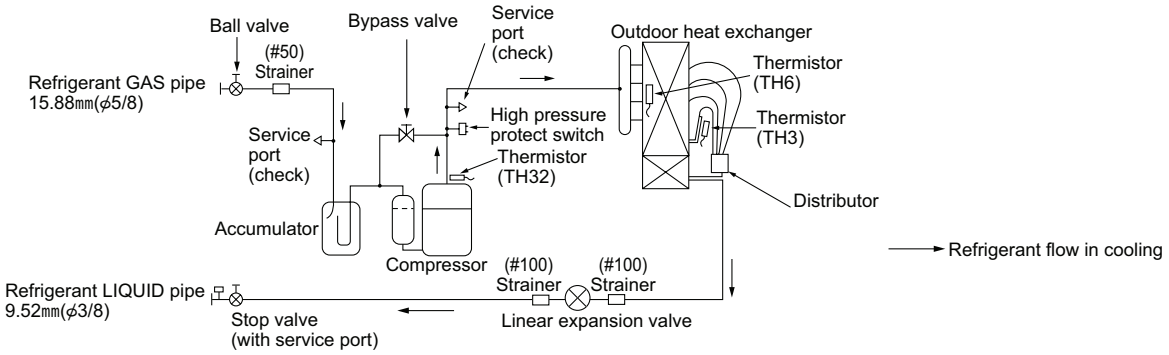
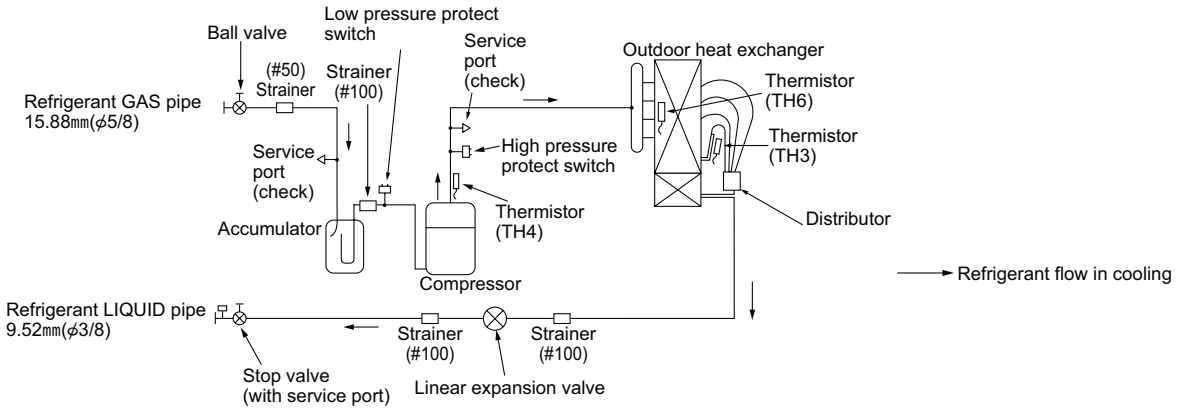
PUY-A42NHA3(-BS)