Safety Precautions

- Before installing the unit, thoroughly read the following safety precautions.
- Observe these safety precautions for your safety.

⚠ **WARNING**

This symbol is intended to alert the user to the presence of important instructions that must be followed to avoid the risk of serious injury or death.

⚠ **CAUTION**

This symbol is intended to alert the user to the presence of important instructions that must be followed to avoid the risk of serious injury or damage to the unit.

- After reading this manual, give it to the user to retain for future reference.
- Keep this manual for easy reference. When the unit is moved or repaired, give this manual to those who provide these services.
  When the user changes, make sure that the new user receives this manual.

⚠ **WARNING**

Ask your dealer or a qualified technician to install the unit.

Improper installation by the user may result in water leakage, electric shock, smoke, and/or fire.

Properly install the unit on a surface that can withstand the weight of the unit.

Unit installed on an unstable surface may fall and cause injury.

Only use specified cables. Securely connect each cable so that the terminals do not carry the weight of the cable.

Improperly connected or fixed cables may produce heat and start a fire.

Take appropriate safety measures against strong winds and earthquakes to prevent the unit from falling.

If the unit is not installed properly, the unit may fall and cause serious injury to the person or damage to the unit.

Do not make any modifications or alterations to the unit. Consult your dealer for repair.

Improper repair may result in water leakage, electric shock, smoke, and/or fire.

Do not touch the heat exchanger fins.

The fins are sharp and dangerous.

In the event of a refrigerant leak, thoroughly ventilate the room.

If refrigerant gas leaks and comes in contact with an open flame, poisonous gases will be produced.

When installing the All-Fresh type units, take it into consideration that the outside air may be discharged directly into the room when the thermo is turned off.

Direct exposure to outdoor air may have an adverse effect on health. It may also result in food spoilage.

Properly install the unit according to the instructions in the installation manual.

Improper installation may result in water leakage, electric shock, smoke, and/or fire.

Have all electrical work performed by an authorized electrician according to the local regulations and instructions in this manual, and a dedicated circuit must be used.

Insufficient capacity of the power supply circuit or improper installation may result in malfunctions of the unit, electric shock, smoke, and/or fire.

MITSUBISHI ELECTRIC

HVAC Advanced Products Division

3400 Lawrenceville Suwanee Road • Suwanee, Georgia 30024
Toll Free: 800-433-4822 • Toll Free Fax: 800-889-9904
www.mrslim.com

Specifications are subject to change without notice.

⚠ **WARNING**

Securely attach the terminal block cover (panel) to the unit.

If the terminal block cover (panel) is not installed properly, dust and/or water may infiltrate and pose a risk of electric shock, smoke, and/or fire.

Only use the type of refrigerant that is indicated on the unit when installing or reinstalling the unit.

Infiltration of any other type of refrigerant or air into the unit may adversely affect the refrigerant cycle and may cause the pipes to burst or explode.

When installing the unit in a small room, exercise caution and take measures against leaked refrigerant reaching the limiting concentration.

Consult your dealer with any questions regarding limiting concentrations and for precautionary measures before installing the unit. Leaked refrigerant gas exceeding the limiting concentration causes oxygen deficiency.

Consult your dealer or a specialist when moving or reinstalling the unit.

Improper installation may result in water leakage, electric shock, and/or fire.

After completing the service work, check for a gas leak.

If leaked refrigerant is exposed to a heat source, such as a fan heater, stove, or electric grill, poisonous gases may be produced.

Do not try to defeat the safety features of the unit.

Forced operation of the pressure switch or the temperature switch by defeating the safety features of these devices, or the use of accessories other than the ones that are recommended by MITSUBISHI may result in smoke, fire, and/or explosion.

Only use accessories recommended by MITSUBISHI.

Ask a qualified technician to install the unit. Improper installation by the user may result in water leakage, electric shock, smoke, and/or fire.

Precautions for handling units for use with R410A

⚠ **CAUTION**

Do not use the existing refrigerant piping.

- A large amount of chlorine that may be contained in the residual refrigerant and refrigerating machine oil in the existing piping may cause the refrigerating machine oil in the new unit to deteriorate.
- R410A is a high-pressure refrigerant and can cause the existing pipes to burst.

Use refrigerant pipes made of phosphorus deoxidized copper. Keep the inner and outer surfaces of the pipes clean and free of such contaminants as sulfur, oxides, dust, dirt, shaving particles, oil, and water.

These types of contaminants inside the refrigerant pipes may cause the refrigerant oil to deteriorate.

Store the pipes to be installed indoors, and keep both ends of the pipes sealed until immediately before brazing. (Keep elbows and other joints wrapped in plastic.)

Infiltration of dust, dirt, or water into the refrigerant system may cause the refrigerating machine oil to deteriorate or cause the unit to malfunction.

Use a small amount of ester oil, ether oil, or alkylbenzene to coat flares and flanges.

Infiltration of a large amount of mineral oil may cause the refrigerating machine oil to deteriorate.

Charge liquid refrigerant (as opposed to gaseous refrigerant) into the system.

If gaseous refrigerant is charged into the system, the composition of the refrigerant in the cylinder will change and may result in performance loss.

Use a vacuum pump with a reverse-flow check valve.

If a vacuum pump that is not equipped with a reverse-flow check valve is used, the vacuum pump oil may flow into the refrigerant cycle and cause the refrigerating machine oil to deteriorate.

Prepare tools for exclusive use with R410A. Do not use the following tools if they have been used with the conventional refrigerant (gauge manifold, charging hose, gas leak detector, reverse-flow check valve, refrigerant charge base, vacuum gauge, and refrigerant recovery equipment.).

- If the refrigerant or the refrigerating machine oil left on these tools are mixed in with R410A, it may cause the refrigerating machine oil to deteriorate.
- Infiltration of water may cause the refrigerating machine oil to deteriorate.
- Gas leak detectors for conventional refrigerants will not detect an R410A leak because R410A is free of chlorine.

Do not use a charging cylinder.

If a charging cylinder is used, the composition of the refrigerant will change, and the unit may experience power loss.

Exercise special care when handling the tools for use with R410A.

Infiltration of dust, dirt, or water into the refrigerant system may cause the refrigerating machine oil to deteriorate.

Only use refrigerant R410A.

The use of other types of refrigerant that contain chlorine (i.e. R22) may cause the refrigerating machine oil to deteriorate.

Before installing the unit

⚠ **WARNING**

Do not install the unit where a gas leak may occur.

If gaseous refrigerant leaks and piles up around the unit, it may be ignited.

Do not use the unit to keep food items, animals, plants, artifacts, or for other special purposes.

The unit is not designed to preserve food products.

Do not use the unit in an unusual environment.

- Do not install the unit where a large amount of oil or steam is present or where acidic or alkaline solutions or chemical sprays are used frequently. Doing so may lead to a remarkable drop in performance, electric shock, malfunctions, smoke, and/or fire.
- The presence of organic solvents or corrosive gas (i.e. ammonia, sulfur compounds, and acid) may cause gas leakage or water leakage.

When installing the unit in a hospital, take appropriate measures to reduce noise interference.

High-frequency medical equipment may interfere with the normal operation of the air conditioner or vice versa.

Do not install the unit on or over things that cannot get wet.

When the humidity level exceeds 80% or if the drainage system is clogged, the indoor unit may drip water. Drain water is also discharged from the outdoor unit. Install a centralized drainage system if necessary.

Before installing the unit (moving and reinstalling the unit) and performing electrical work

⚠ **WARNING**

When installing or relocating the unit, make sure that no substance other than the specified refrigerant (R410A) enters the refrigerant circuit.

Any presence of foreign substance such as air can cause abnormal pressure rise or explosion.

⚠ **CAUTION**

Properly ground the unit.

Do not connect the grounding wire to a gas pipe, water pipe, lightning rod, or grounding wire from a telephone pole. Improper grounding may result in electric shock, smoke, fire, and/or malfunction due to noise interference.

Do not put tension on the power supply wires.

If tension is put on the wires, they may break and result in excessive heat, smoke, and/or fire.

Install an earth leakage breaker to avoid the risk of electric shock.

Failure to install an earth leakage breaker may result in electric shock, smoke, and/or fire.

Use the kind of power supply wires that are specified in the installation manual.

The use of wrong kind of power supply wires may result in current leak, electric shock, and/or fire.

Use breakers and fuses (current breaker, remote switch <switch + Type-B fuse>, moulded case circuit breaker) with the proper current capacity.

The use of wrong capacity fuses, steel wires, or copper wires may result in malfunctions, smoke, and/or fire.

Do not spray water on the air conditioner or immerse the air conditioner in water.

Otherwise, electric shock and/or fire may result.

Periodically check the installation base for damage.

If the unit is left on a damaged platform, it may fall and cause injury.

Properly install the drain pipes according to the instructions in the installation manual. Keep them insulated to avoid dew condensation.

Improper plumbing work may result in water leakage and damage to the furnishings.

Exercise caution when transporting products.

- Products weighing more than 20 kg should not be carried alone.
- Do not carry the product by the PP bands that are used on some products.
- Do not touch the heat exchanger fins. They are sharp and dangerous.
- When lifting the unit with a crane, secure all four corners to prevent the unit from falling.

Properly dispose of the packing materials.

- Nails and wood pieces in the package may pose a risk of injury.
- Plastic bags may pose a risk of choking hazard to children. Tear plastic bags into pieces before disposing of them.

Before the test run

⚠ **CAUTION**

Turn on the unit at least 12 hours before the test run.

Keep the unit turned on throughout the season. If the unit is turned off in the middle of a season, it may result in malfunctions.

To avoid the risk of electric shock or malfunction of the unit, do not operate switches with wet hands.

Do not touch the refrigerant pipes with bare hands during and immediately after operation.

During or immediately after operation, certain parts of the unit such as pipes and compressor may be either very cold or hot, depending on the state of the refrigerant in the unit at the time. To reduce the risk of frost bites and burns, do not touch these parts with bare hands.

Do not operate the unit without panels and safety guards.

Rotating, high-temperature, or high-voltage parts on the unit pose a risk of burns and/or electric shock.

Do not turn off the power immediately after stopping the operation.

Keep the unit on for at least five minutes before turning off the power to prevent water leakage or malfunction.

Do not operate the unit without the air filter.

Dust particles may build up in the system and cause malfunctions.

I Read Before Servicing

[1] Read Before Servicing 3
[2] Necessary Tools and Materials 4
[3] Piping Materials 5
[4] Storage of Piping 7
[5] Pipe Processing 7
[6] Brazing 8
[7] Air Tightness Test 9
[8] Vacuum Drying (Evacuation) 10
[9] Refrigerant Charging 11
[10] Remedies to be taken in case of a Refrigerant Leak 11
[11] Characteristics of the Conventional and the New Refrigerants 12
[12] Notes on Refrigerating Machine Oil 13

II Restrictions

[1] Types and Maximum allowable Length of Cables 17
[2] Switch Settings and Address Settings 18
[3] Sample System Connection 23
[4] An Example of a System to which an MA Remote Controller is connected 24
[5] An Example of a System to which an M-NET Remote Controller is connected 46
[6] An Example of a System to which both MA Remote Controller and M-NET Remote Controller are connected 50
[7] Restrictions on Pipe Length 53

III Outdoor Unit / BC Controller Components

[1] Outdoor Unit Components and Refrigerant Circuit 67
[2] Control Box of the Outdoor Unit 79
[3] Outdoor Unit Circuit Board 81
[4] BC Controller (Under the panel) 86
[5] Control Box of the BC Controller 88
[6] BC Controller Circuit Board 89

IV Remote Controller

[1] Functions and Specifications of MA and ME Remote Controllers 93
[2] Group Settings and Interlock Settings via the ME Remote Controller 94
[3] Interlock Settings via the MA Remote Controller 98
[4] Using the built-in Temperature Sensor on the Remote Controller 101

V Electrical Wiring Diagram

[1] Electrical Wiring Diagram of the Outdoor Unit 105
[2] Electrical Wiring Diagram of the BC Controller 109

VI Refrigerant Circuit

[1] Refrigerant Circuit Figure 119
[2] Principal Parts and Functions 126

VII Control

[1] Functions and Factory Settings of the Dipswitches 139
[2] Controlling the Outdoor Unit 148
[3] Controlling BC Controller 164
[4] Operation Flow Chart 165

VIII Test Run Mode

[1] Items to be checked before a Test Run 179
[2] Test Run Method 180
[3] Operating Characteristic and Refrigerant Amount 181
[4] Adjusting the Refrigerant Amount 182
[5] Refrigerant Amount Adjust Mode 187
[6] The following symptoms are normal. 191
[7] Standard Operation Data (Reference Data) 192

IX Troubleshooting

[1] Check Code Lists 235
[2] Responding to Error Display on the Remote Controller 239
[3] Investigation of Transmission Wave Shape/Noise 314
[4] Troubleshooting Principal Parts 317
[5] Refrigerant Leak 350
[6] Compressor Replacement Instructions (only P168-P234 types) 351
[7] Collecting the Cooling Liquid from the Accumulator (Only P168-P234 types) 353
[8] Servicing the BC controller 354

X LED monitor display on the outdoor unit board

[1] How to read the LED on the service monitor 361

Ⅰ Read Before Servicing

[1] Read Before Servicing 3
[2] Necessary Tools and Materials 4
[3] Piping Materials 5
[4] Storage of Piping 7
[5] Pipe Processing 7
[6] Brazing 8
[7] Air Tightness Test 9
[8] Vacuum Drying (Evacuation) 10
[9] Refrigerant Charging 11
[10] Remedies to be taken in case of a Refrigerant Leak 11
[11] Characteristics of the Conventional and the New Refrigerants 12
[12] Notes on Refrigerating Machine Oil 13

[1] Read Before Servicing

1. **Check the type of refrigerant used in the system to be serviced.**
   Refrigerant Type CITY MULTI Y/R2: R410A

2. **Check the symptoms exhibited by the unit to be serviced.**
   Refer to this service handbook for symptoms relating to the refrigerant cycle.

3. **Thoroughly read the safety precautions at the beginning of this manual.**

4. **Preparing necessary tools: Prepare a set of tools to be used exclusively with each type of refrigerant.**
   Refer to page 4 for information on the use of tools.

5. **Verification of the connecting pipes: Verify the type of refrigerant used for the unit to be moved or replaced.**
   - Use refrigerant pipes made of phosphorus deoxidized copper. Keep the inner and outer surfaces of the pipes clean and free of such contaminants as sulfur, oxides, dust, dirt, shaving particles, oil, and water.
   - These types of contaminants inside the refrigerant pipes may cause the refrigerant oil to deteriorate.

6. **If there is a leak of gaseous refrigerant and the remaining refrigerant is exposed to an open flame, a poisonous gas hydrofluoric acid may form. Keep workplace well ventilated.**

⚠ **CAUTION**
- Install new pipes immediately after removing old ones to keep moisture out of the refrigerant circuit.
- The use of refrigerant that contains chloride, such as R22, will cause the refrigerating machine oil to deteriorate.

[2] Necessary Tools and Materials

Prepare the following tools and materials necessary for installing and servicing the unit.

Tools for use with R410A (Adaptability of tools that are for use with R22)

1. To be used exclusively with R410A (not to be used if used with R22)

Tools/Materials	Use	Notes
Gauge Manifold	Evacuation and refrigerant charging	Higher than 5.09MPa[738psi] on the high-pressure side
Charging Hose	Evacuation and refrigerant charging	
Refrigerant Recovery Cylinder	Refrigerant recovery	
Refrigerant Cylinder	Refrigerant charging	The refrigerant type is indicated. The cylinder is pink.
Charging Port on the Refrigerant Cylinder	Refrigerant charging	The charge port diameter is larger than that of the current port.
Flare Nut	Connection of the unit with the pipes	Use Type-2 Flare nuts.

2. Tools and materials that may be used with R410A with some restrictions

Tools/Materials	Use	Notes
Gas Leak Detector	Gas leak detection	The ones for use with HFC refrigerant may be used.
Vacuum Pump	Vacuum drying	May be used if a check valve adapter is attached.
Flare Tool	Flare processing	Flare processing dimensions for the piping in the system using the new refrigerant differ from those of R22. Refer to page 6.
Refrigerant Recovery Equipment	Refrigerant recovery	May be used if compatible with R410A.

3. Tools and materials that are used with R22 that may also be used with R410A

Tools/Materials	Use	Notes
Vacuum Pump with a Check Valve	Vacuum drying	
Bender	Bending pipes	
Torque Wrench	Tightening flare nuts	Only the flare processing dimensions for pipes that have a diameter of ø12.70 (1/2") and ø15.88 (5/8") have been changed.
Pipe Cutter	Cutting pipes	
Welder and Nitrogen Cylinder	Welding pipes	
Refrigerant Charging Meter	Refrigerant charging	
Vacuum Gauge	Vacuum level check	

4. Tools and materials that must not be used with R410A

Tools/Materials	Use	Notes
Charging Cylinder	Refrigerant charging	Prohibited to use

Tools for R410A must be handled with special care to keep moisture and dust from infiltrating the cycle.

[3] Piping Materials

Do not use the existing piping!

OK New Piping NO Existing Piping

1. Copper pipe materials

O-material (Annealed)	Soft copper pipes (annealed copper pipes). They can easily be bent with hands.
1/2H-material, H-material (Drawn)	Hard copper pipes (straight pipes). They are stronger than the O-material (Annealed) at the same radial thickness.

- The distinction between O-materials (Annealed) and 1/2H-materials, H-materials (Drawn) is made based on the strength of the pipes themselves.
- O-materials (Annealed) can easily be bent with hands.
- 1/2H-materials, H-materials (Drawn) are considerably stronger than O-material (Annealed) at the same thickness.

2. Types of copper pipes

Maximum working pressure	Refrigerant type
3.45 MPa[500psi]	R22 etc.
4.30 MPa[624psi]	R410A etc.

3. Piping materials/Radial thickness

Use refrigerant pipes made of phosphorus deoxidized copper.
The operation pressure of the units that use R410A is higher than that of the units that use R22.
Use pipes that have at least the radial thickness specified in the chart below.

Pipe size (mm[in])		Radial thickness (mm[in])		Type
ø6.35	[1/4"]	0.8t	[0.0315]	O-material (Annealed)
ø9.52	[3/8"]	0.8t	[0.0315]	
ø12.7	[1/2"]	0.8t	[0.0315]	
ø15.88	[5/8"]	1.0t	[0.0394]	
ø19.05	[3/4"]	1.0t	[0.0394]	1/2H-material, H-material (Drawn)
ø22.2	[7/8"]	1.0t	[0.0394]	
ø28.58	[1-1/8"]	1.0t	[0.0394]	

- The pipes in the system that uses the refrigerant currently on the market are made with O-material (Annealed), even if the pipe diameter is less than ø19.05 (3/4"). For a system that uses R410A, use pipes that are made with 1/2H-material, H-material (Drawn) unless the pipe diameter is at least ø19.05 (3/4") and the radial thickness is at least 1.2t.
- The figures in the radial thickness column are based on the Japanese standards and provided only as a reference. Use pipes that meet the local standards.

4. Thickness and refrigerant type indicated on the piping materials

Ask the pipe manufacturer for the symbols indicated on the piping material for new refrigerant.

5. Flare processing (O-material (Annealed) only)

The flare processing dimensions for the pipes that are used in the R410A system are larger than those in the R22 system.

Flare processing dimensions (mm[in])

Pipe size (mm[in])		A dimension (mm[in])			
		R410A		R22	
ø6.35	[1/4"]	9.1	[0.358]	9.0	[0.354]
ø9.52	[3/8"]	13.2	[0.520]	13.0	[0.512]
ø12.7	[1/2"]	16.6	[0.654]	16.2	[0.638]
ø15.88	[5/8"]	19.7	[0.776]	19.4	[0.764]
ø19.05	[3/4"]	24.0	[0.945]	23.3	[0.917]

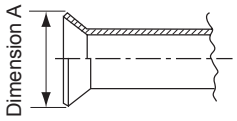

If a clutch-type flare tool is used to flare the pipes in the system using R410A, the length of the pipes must be between 1.0 and 1.5 mm. For margin adjustment, a copper pipe gauge is necessary.

6. Flare nut

Type-2 flare nuts instead of type-1 are used to increase the strength. The size of some of the flare nuts have also been changed.

Flare nut dimensions (mm[in])

Pipe size (mm[in])		B dimension (mm[in])			
		R410A		R22	
ø6.35	[1/4"]	17.0	[0.669]	17.0	[0.669]
ø9.52	[3/8"]	22.0	[0.866]	22.0	[0.866]
ø12.7	[1/2"]	26.0	[1.024]	24.0	[0.945]
ø15.88	[5/8"]	29.0	[1.142]	27.0	[1.063]
ø19.05	[3/4"]	36.0	[1.417]	36.0	[1.417]

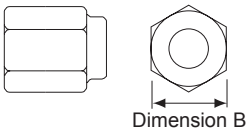

The figures in the radial thickness column are based on the Japanese standards and provided only as a reference. Use pipes that meet the local standards.

[4] Storage of Piping

1. Storage location

Store the pipes to be used indoors. (Warehouse at site or owner's warehouse)
If they are left outdoors, dust, dirt, or moisture may infiltrate and contaminate the pipe.

2. Sealing the pipe ends

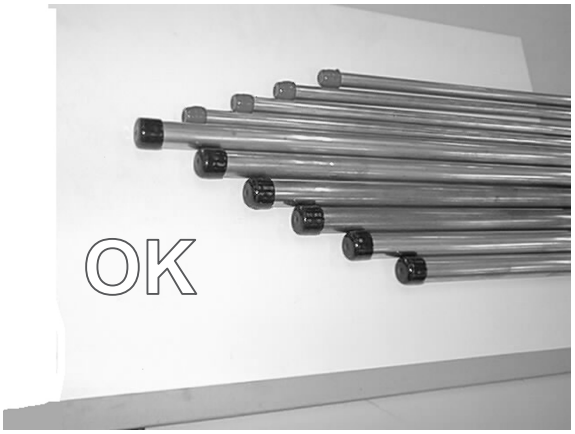

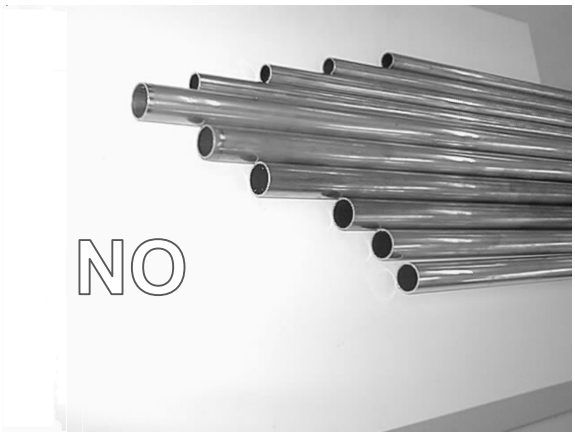

Both ends of the pipes should be sealed until just before brazing.
Keep elbow pipes and T-joints in plastic bags.

The new refrigerator oil is 10 times as hygroscopic as the conventional refrigerating machine oil (such as Suniso) and, if not handled with care, could easily introduce moisture into the system. Keep moisture out of the pipes, for it will cause the oil to deteriorate and cause a compressor failure.

[5] Pipe Processing

Use a small amount of ester oil, ether oil, or alkylbenzene to coat flares and flanges.

1. Notes

- Use a minimum amount of oil.
- Use only ester oil, ether oil, and alkylbenzene.

[6] Brazing

No changes have been made in the brazing procedures. Perform brazing with special care to keep foreign objects (such as oxide scale, water, and dust) out of the refrigerant system.

Example: Inside the brazed connection

Use of oxidized solder for brazing

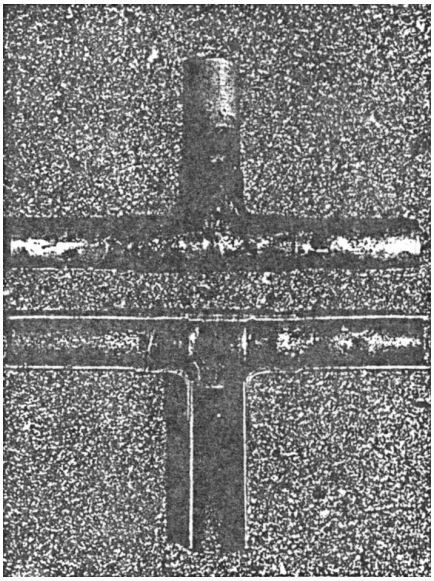

Use of non-oxidized solder for brazing

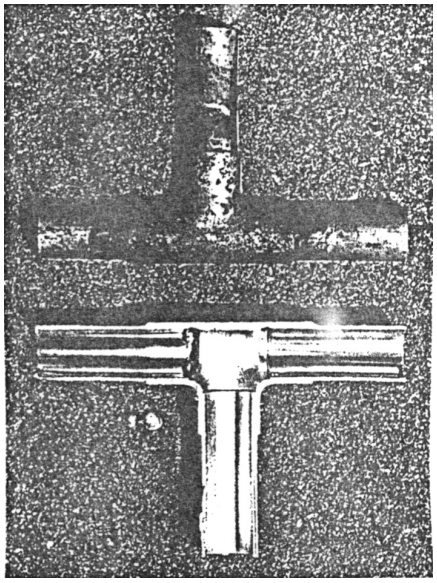

1. Items to be strictly observed

- Do not conduct refrigerant piping work outdoors if raining.
- Use non-oxidized solder.
- Use a brazing material (BCuP-3) that requires no flux when brazing between copper pipes or between a copper pipe and copper coupling.
- If installed refrigerant pipes are not immediately connected to the equipment, then braze and seal both ends.

2. Reasons

- The new refrigerating machine oil is 10 times as hygroscopic as the conventional oil and is more likely to cause unit failure if water infiltrates into the system.
- Flux generally contains chloride. Residual flux in the refrigerant circuit will cause sludge to form.

3. Notes

Do not use commercially available antioxidants because they may cause the pipes to corrode or refrigerating machine oil to deteriorate.

[7] Air Tightness Test

No changes have been made in the detection method. Note that a refrigerant leak detector for R22 will not detect an R410A leak.

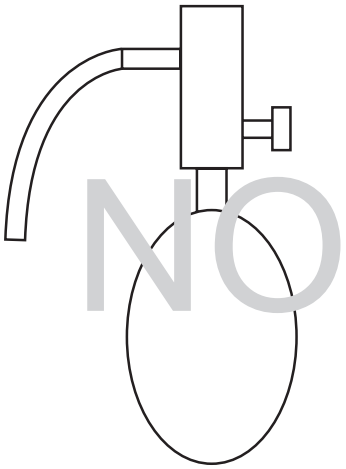

Halide torch

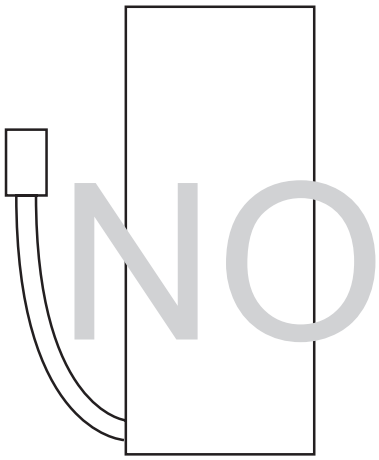

R22 leakage detector

1. Items to be strictly observed

- Pressurize the equipment with nitrogen up to the design pressure (4.15MPa[601psi]), and then judge the equipment's air tightness, taking temperature variations into account.
- When using refrigerant instead of a leak detector to find the location of a leak, use R410A.
- Refrigerant R410A must be charged in its liquid state (vs. gaseous state).

2. Reasons

- Oxygen, if used for an air tightness test, poses a risk of explosion. (Only use nitrogen to check air tightness.)
- Refrigerant R410A must be charged in its liquid state. If gaseous refrigerant in the cylinder is drawn out first, the composition of the remaining refrigerant in the cylinder will change and become unsuitable for use.

3. Notes

Procure a leak detector that is specifically designed to detect an HFC leak. A leak detector for R22 will not detect an HFC(R410A) leak.

[8] Vacuum Drying (Evacuation)

(Photo1) 15010H

(Photo2) 14010

Recommended vacuum gauge:
ROBINAIR 14010 Thermistor Vacuum Gauge

1. Vacuum pump with a reverse-flow check valve (Photo1)

To prevent the vacuum pump oil from flowing into the refrigerant circuit during power OFF or power failure, use a vacuum pump with a reverse-flow check valve.
A reverse-flow check valve may also be added to the vacuum pump currently in use.

2. Standard of vacuum degree (Photos 2)

Use a vacuum pump that attains 5Torr(650Pa) or lower degree of vacuum after 5 minutes of operation, and connect it directly to the vacuum gauge. Use a pump well-maintained with an appropriate lubricant. A poorly maintained vacuum pump may not be able to attain the desired degree of vacuum.

3. Required precision of vacuum gauge

Use a vacuum gauge that registers a vacuum degree of 5Torr(650Pa) and measures at intervals of 1Torr(130Pa). (A recommended vacuum gauge is shown in Photo2.)
Do not use a commonly used gauge manifold because it cannot register a vacuum degree of 5Torr(650Pa).

4. Evacuation time

- After the degree of vacuum has reached 5Torr(650Pa), evacuate for an additional 1 hour. (A thorough vacuum drying removes moisture in the pipes.)
- Verify that the vacuum degree has not risen by more than 1Torr(130Pa) 1hour after evacuation. A rise by less than 1Torr(130Pa) is acceptable.
- If the vacuum is lost by more than 1Torr(130Pa), conduct evacuation, following the instructions in section 6. Special vacuum drying.

5. Procedures for stopping vacuum pump

To prevent the reverse flow of vacuum pump oil, open the relief valve on the vacuum pump side, or draw in air by loosening the charge hose, and then stop the operation.
The same procedures should be followed when stopping a vacuum pump with a reverse-flow check valve.

6. Special vacuum drying

- When 5Torr(650Pa) or lower degree of vacuum cannot be attained after 3 hours of evacuation, it is likely that water has penetrated the system or that there is a leak.
- If water infiltrates the system, break the vacuum with nitrogen. Pressurize the system with nitrogen gas to 0.5kgf/cm^{2}G(0.05MPa) and evacuate again. Repeat this cycle of pressurizing and evacuation either until the degree of vacuum below 5Torr(650Pa) is attained or until the pressure stops rising.
- Only use nitrogen gas for vacuum breaking. (The use of oxygen may result in an explosion.)

[9] Refrigerant Charging

Cylinder with a siphon

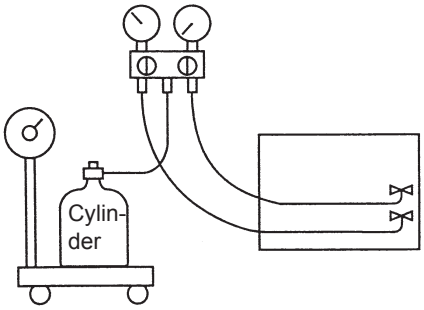

Cylinder color R410A is pink.

Cylinder without a siphon

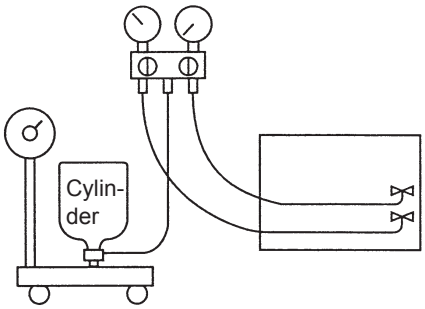

Refrigerant charging in the liquid state

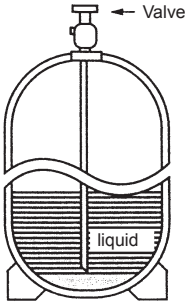

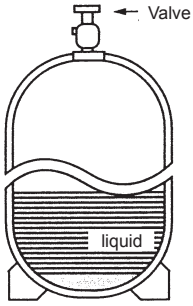

1. Reasons

R410A is a pseudo-azeotropic HFC blend (boiling point R32=-52°C[-62°F], R125=-49°C[-52°F]) and can almost be handled the same way as a single refrigerant, such as R22. To be safe, however, draw out the refrigerant from the cylinder in the liquid phase. If the refrigerant in the gaseous phase is drawn out, the composition of the remaining refrigerant will change and become unsuitable for use.

2. Notes

When using a cylinder with a siphon, refrigerant is charged in the liquid state without the need for turning it upside down. Check the type of the cylinder on the label before use.

[10] Remedies to be taken in case of a Refrigerant Leak

If the refrigerant leaks out, it may be replenished. The entire refrigerant does not need to be replaced. Charge refrigerant in the liquid state.)
Refer to "9. (5) Refrigerant leak".

[11] Characteristics of the Conventional and the New Refrigerants

1. Chemical property

As with R22, the new refrigerant (R410A) is low in toxicity and chemically stable nonflammable refrigerant.
However, because the specific gravity of vapor refrigerant is greater than that of air, leaked refrigerant in a closed room will accumulate at the bottom of the room and may cause hypoxia.
If exposed to an open flame, refrigerant will generate poisonous gases. Do not perform installation or service work in a confined area.

	New Refrigerant (HFC type)	Conventional Refrigerant (HFC type)
	R410A	R22
	R32/R125	R22
Composition (wt%)	(50/50)	(100)
Type of Refrigerant	Pseudo-azeotropic Refrigerant	Single Refrigerant
Chloride	Not included	Included
Safety Class	A1/A1	A1
Molecular Weight	72.6	86.5
Boiling Point (°C/°F)	-51.4/-60.5	-40.8/-41.4
Steam Pressure (25°C,MPa/77°F,psi) (gauge)	1.557/226	0.94/136
Saturated Steam Density (25°C,kg/m^3/77°F,psi)	64.0	44.4
Flammability	Nonflammable	Nonflammable
Ozone Depletion Coefficient (ODP)*1	0	0.055
Global Warming Coefficient (GWP)*2	1730	1700
Refrigerant Charging Method	Refrigerant charging in the liquid state	Refrigerant charging in the gaseous state
Replenishment of Refrigerant after a Refrigerant Leak	Available	Available

*1 When CFC11 is used as a reference
*2 When CO_2 is used as a reference

2. Refrigerant composition

R410A is a pseudo-azeotropic HFC blend and can almost be handled the same way as a single refrigerant, such as R22. To be safe, however, draw out the refrigerant from the cylinder in the liquid phase. If the refrigerant in the gaseous phase is drawn out, the composition of the remaining refrigerant will change and become unsuitable for use.
If the refrigerant leaks out, it may be replenished. The entire refrigerant does not need to be replaced.

3. Pressure characteristics

The pressure in the system using R410A is 1.6 times as great as that in the system using R22.

Temperature (°C/°F)	Pressure (gauge)	
	R410A	R22
	MPa/psi	MPa/psi
-20/-4	0.30/44	0.14/20
0/32	0.70/102	0.40/58
20/68	1.34/194	0.81/117
40/104	2.31/335	1.44/209
60/140	3.73/541	2.33/338
65/149	4.17/605	2.60/377

[12] Notes on Refrigerating Machine Oil

1. Refrigerating machine oil in the HFC refrigerant system

HFC type refrigerants use a refrigerating machine oil different from that used in the R22 system.
Note that the ester oil used in the system has properties that are different from commercially available ester oil.

Refrigerant	Refrigerating machine oil
R22	Mineral oil
R410A	Ester oil

2. Effects of contaminants*1

Refrigerating machine oil used in the HFC system must be handled with special care to keep contaminants out.
The table below shows the effect of contaminants in the refrigerating machine oil on the refrigeration cycle.

3. The effects of contaminants in the refrigerating machine oil on the refrigeration cycle.

<table>
<tr><th colspan="2">Cause</th><th colspan="2">Symptoms</th><th>Effects on the refrigerant cycle</th></tr>
<tr><td colspan="2" rowspan="3">Water infiltration</td><td></td><td>Frozen expansion valve and capillary tubes</td><td rowspan="3">Clogged expansion valve and capillary tubes
Poor cooling performance
Compressor overheat
Motor insulation failure
Burnt motor
Coppering of the orbiting scroll
Lock
Burn-in on the orbiting scroll</td></tr>
<tr><td>Hydrolysis</td><td rowspan="2">Sludge formation and adhesion
Acid generation
Oxidization
Oil degradation</td></tr>
<tr><td colspan="2">Air infiltration</td><td>Oxidization</td></tr>
<tr><td rowspan="4">Infiltration of contaminants</td><td rowspan="2">Dust, dirt</td><td colspan="2">Adhesion to expansion valve and capillary tubes</td><td>Clogged expansion valve, capillary tubes, and drier
Poor cooling performance
Compressor overheat</td></tr>
<tr><td colspan="2">Infiltration of contaminants into the compressor</td><td>Burn-in on the orbiting scroll</td></tr>
<tr><td rowspan="2">Mineral oil etc.</td><td colspan="2">Sludge formation and adhesion</td><td>Clogged expansion valve and capillary tubes
Poor cooling performance
Compressor overheat</td></tr>
<tr><td colspan="2">Oil degradation</td><td>Burn-in on the orbiting scroll</td></tr>
</table>

*1. Contaminants is defined as moisture, air, processing oil, dust/dirt, wrong types of refrigerant, and refrigerating machine oil.

II Restrictions

[1] Types and Maximum allowable Length of Cables 17
[2] Switch Settings and Address Settings 18
[3] Sample System Connection 23
[4] An Example of a System to which an MA Remote Controller is connected 24
[5] An Example of a System to which an M-NET Remote Controller is connected 46
[6] An Example of a System to which both MA Remote Controller and M-NET Remote Controller are connected 50
[7] Restrictions on Pipe Length 53

[1] Types and Maximum allowable Length of Cables

1. Wiring work

(1) Notes

1) Have all electrical work performed by an authorized electrician according to the local regulations and instructions in this manual.
2) Install the control cable at least 5cm[1-31/32"] away from the power supply cable to avoid noise interference. (Do not put the control cable and power supply cable in the same conduit tube.)
3) Provide class-D grounding on the outdoor unit.
4) Run the cable from the electric box of the indoor or outdoor unit in such way that the box is accessible for servicing.
5) Do not connect the terminal block for transmission line to supply voltage of 208V or 230V. Doing so will damage the electronic components on the terminal block.
6) Use 2-core shielded cables as control cables. (Marked with OK in the figure below) Use a separate 2-core control cable for each refrigerant system. Do not use a single multiple-core cable to connect indoor units that belong to different refrigerant systems. The use of a multiple-core cable may result in signal transmission errors and malfunctions. (Marked with NO in the figure below)

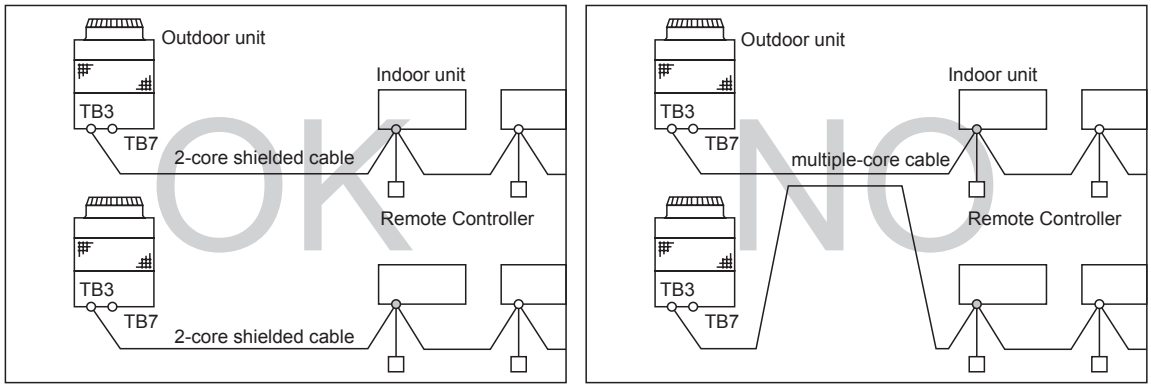

(2) Control wiring

Different types of control wiring are used for different systems.
Refer to section "[4] An Example of a System to which an MA Remote Controller is connected - [6] An Example of a System to which both MA Remote Controller and M-NET Remote Controller are connected" before performing wiring work.

[Types and maximum allowable length of cables]

Control lines are categorized into 2 types: transmission line and remote controller line. Use the appropriate type of cables and observe the maximum allowable length specified for a given system. If a given system has a long transmission line or if a noise source is located near the unit, place the unit away from the noise source to reduce noise interference.

1) M-NET transmission line

Cable type	Facility type	All facility types
	Type	Shielded cable CVVS, CPEVS, MVVS
	Number of cores	2-core cable
	Cable size	Larger than 1.25mm^2 [AWG16]
Maximum transmission line distance between the outdoor unit and the farthest indoor unit		200 m [656ft] max.
Maximum transmission line distance for centralized control and Indoor/outdoor transmission line (Maximum line distance via outdoor unit)		500 m [1640ft] max. *The maximum overall line length from the power supply unit on the transmission lines for centralized control to each outdoor unit or to the system controller is 200m [656ft] max.

2) Remote controller wiring

<table>
<tr><th colspan="2"></th><th>MA remote controller*1</th><th colspan="2">M-NET remote controller*2</th></tr>
<tr><td rowspan="4">Cable type</td><td rowspan="2">Type</td><td rowspan="2">VCTF, VCTFK, CVV, CVS, VVR, VVF, VCT</td><td>10m [32ft] or less</td><td>When the cable length exceeds 10m [32ft]</td></tr>
<tr><td>Shielded cable MVVS</td><td rowspan="3">1) Follow the same specifications for M-NET transmission lines.</td></tr>
<tr><td>Number of cores</td><td>2-core cable</td><td>2-core cable</td></tr>
<tr><td>Cable size</td><td>0.3 to 1.25mm^2 *3
[AWG22 to 16]</td><td>0.3 to 1.25mm^2 *3
[AWG22 to 16]
(0.75 to 1.25mm^2) *4
[AWG18 to 14]</td></tr>
<tr><td colspan="2">Maximum overall line length</td><td>200 m [656ft] max.</td><td>10 m [32ft] max.</td><td>The section of the cable that exceeds 10m [32ft] must be included in the maximum indoor-outdoor transmission line distance.</td></tr>
</table>

*1 MA remote controller refers to MA remote controller, MA deluxe remote controller, MA simple remote controller, and wireless remote controller.
*2 M-NET remote controller refers to ME remote controller.
*3 The use of cables that are smaller than 0.75mm^2 (AWG18) is recommended for easy handling.
*4 When connected to the terminal block on the Simple remote controller, use cables that meet the cable size specifications shown in the parenthesis.

[2] Switch Settings and Address Settings

1. Switch setting

The need for switch settings depends on the configuration of the system.
Refer to section "[4] An Example of a System to which an MA Remote Controller is connected - [6] An Example of a System to which both MA Remote Controller and M-NET Remote Controller are connected" before performing wiring work.
Set the switches while the power is turned off.
If the switch settings are changed while the unit is being powered, those changes will not take effect, and the unit will not function properly.

2. Address settings

(1) Address settings table

The need for address settings and the range of address setting depend on the configuration of the system.

Unit or controller		Address setting range	Setting method	Address setting
Indoor unit	Main/sub unit	0, 01 to 50*1	Assign the smallest address to the main indoor unit in the group, and assign sequential address numbers to the rest of the indoor units in the same group. *5 In an R2 system with a sub BC controller, make the settings for the indoor units in the following order. (i) Indoor unit to be connected to the main BC controller (ii) Indoor unit to be connected to sub BC controller 1 (iii) Indoor unit to be connected to sub BC controller 2 Make the settings for the indoor units in the way that the formula "(i) < (ii) < (iii)" is true.	00
LOSSNAY , OA processing unit			Assign an arbitrary but unique address to each of these units after assigning an address to all indoor units.	00
M-NET remote controller	Main remote controller	101 to 150	Add 100 to the smallest address of all the indoor units in the same group.	101
	Sub remote controller	151 to 200*2	Add 150 to the smallest address of all the indoor units in the same group.	
MA remote controller		No address settings required. (The main/sub setting must be made if 2 remote controllers are connected to the system.)		Main
Outdoor unit		0, 51 to 100*1,*3,*4	Assign an address that equals the sum of the smallest address of the indoor units in the same refrigerant system and 50.	00
Auxiliary outdoor unit	BC controller (main)	0, 52 to 100*3*4	Assign an address that equals the sum of the address of the outdoor unit in the same refrigerant system and 1.	
	BC controller (sub)		Assign an address that equals the sum of the smallest address of the indoor units that are connected to the sub BC controller and 50. If a sub BC controller is connected, auto-startup function will not be available.	
System controller	System remote controller	201 to 250	Assign an arbitrary but unique address within the range listed on the left to each unit.	201
	ON/OFF remote controller		Assign an address that equals the sum of the smallest group number of the group to be controlled and 200.	
	Schedule timer (compatible with M-NET)		Assign an arbitrary but unique address within the range listed on the left to each unit.	202
	Central controller G-50	0, 201 to 250	Assign an arbitrary but unique address within the range listed on the left to each unit. The address must be set to "0" to control the K-control unit.	000
	LM adapter	201 to 250	Assign an arbitrary but unique address within the range listed on the left to each unit.	247

*1 No address settings are required for units in a system with one outdoor unit (with some exceptions). Address setting is required if a sub BC controller is connected.

*2 To set the M-NET remote controller address to "200", set it to "00".

*3 To set the outdoor unit or auxiliary outdoor unit address to "100", set it to "50".

*4 If a given address overlaps any of the addresses that are assigned to other outdoor units, use a different, unused address within the setting range (with some exceptions).

*5 Some indoor units have 2 or 3 controller boards that require address settings.

(1) The address to be assigned to the No.1 controller board (by the power supply terminal block) must be 1 smaller than that to the No.2 controller board.

(2) No. 2 controller board address must be equal to the sum of the No. 1 controller board address and 1, and the No.3 controller board address must equal to the No. 1 controller address and 2.

(2) Power supply switch connector connection on the outdoor unit
(Factory setting: The male power supply switch connector is connected to CN41.)

System configuration	Connection to the system controller	Power supply unit for transmission lines	Group operation of units in a system with multiple outdoor units	Power supply switch connector connection
System with one outdoor unit	–	–	–	Leave CN41 as it is (Factory setting)
System with multiple outdoor units	Not connected	–	Not grouped	
			Grouped	Disconnect the male connector from the female power supply switch connector (CN41) and connect it to the female power supply switch connector (CN40) on only one of the outdoor units.*3 *Connect the S (shielded) terminal on the terminal block (TB7) on the outdoor unit whose CN41 was replaced with CN40 to the ground terminal (⏚) on the electric box.
	With connection to the indoor unit system	Not required	Grouped/not grouped	
	With connection to the centralized control system	Not required*2 (Powered from the outdoor unit)	Grouped/not grouped	
		Required	Grouped/not grouped	Leave CN41 as it is (Factory setting)

*1 The need for a power supply unit for transmission lines depends on the system configuration.
*2 When connecting a system controller to the transmission line for centralized control or performing a group operation of units in different refrigerant systems, the replacement of male power supply switch connector (CN41) must be performed only on one of the outdoor units in the system.

(3) Settings for the centralized control switch for the outdoor unit (Factory setting: SW2-1 are set to OFF.)

System configuration		Centralized control switch settings (SW2-1)
Connection to the system controller	Not connected	Leave it to OFF. (Factory setting)
Connection to the system controller	Connected*1	ON

*1. When only the LM adapter is connected, leave SW2-1 to OFF (as it is).

(4) Indoor unit port switch setting (R2 series (factory setting: "0"))
Make the setting for the port switch that corresponds to the connected BC (main/sub) controllers.
When more than two ports are used, make the setting on the port with a smaller port number.
The total capacity and the number of connectable indoor units per port is 54 and below, and 3 respectively.

(5) Selecting the position of temperature detection for the indoor unit (Factory setting: SW1-1 set to "OFF".)
1) To use the built-in sensor on the remote controller, set the SW1-1 to ON.
- Some models of remote controllers are not equipped with a built-in temperature sensor.
  Use the built-in temperature sensor on the indoor unit instead.
- When using the built-in sensor on the remote controller, install the remote controller where room temperature can be detected.

(Note) Factory setting for SW1-1 on the indoor unit of the All-Fresh Models is ON.
2) When an optional temperature sensor is used, set SW1-1 to OFF, and set SW3-8 to ON.
- When using an optional temperature sensor, install it where room temperature can be detected.

(6) Various start-stop controls (Indoor unit settings)
Each indoor unit (or group of indoor units) can be controlled individually by setting SW 1-9 and 1-10.

Function	Operation of the indoor unit when the operation is resumed after the unit was stopped	Setting (SW1)*1	
		9	10
Power ON/OFF by the plug*2*3*4	Indoor unit will go into operation regardless of its operation status before power off (power failure). (In approx. 5 minutes)	OFF	ON
Automatic restoration after power failure	Indoor unit will go into operation if it was in operation when the power was turned off (or cut off due to power failure). (In approx. 5 minutes)	ON	OFF
	Indoor unit will remain stopped regardless of its operation status before power off (power failure).	OFF	OFF

*1. Requires that the dipswitch settings for all the units in the group be made.

*2. Not applicable to units with a built-in drain pump or humidifier.

*3. Models with a built-in drain pump cannot be turned on/off by the plug individually. All the units in the same refrigerant circuits will be turned on or off by the plug.

*4. Do not cut off power to the outdoor unit. Cutting off the power supply to the outdoor unit will cut off the power supply to the crankcase heater and may cause the compressor to malfunction when the unit is put back into operation.

(7) Miscellaneous settings
Cooling-only setting for the indoor unit: Cooling only model (Factory setting: SW3-1 "OFF.")
When using indoor unit as a cooling-only unit, set SW3-1 to ON.

(8) Various types of control using input-output signal connector on the outdoor unit (various connection options)

Type	Usage	Function	Terminal to be used
Input	Prohibiting cooling/heating operation (thermo OFF) by an external input to the outdoor unit. *It can be used as the DEMAND control device for each system.	Compressor ON/OFF (level)	CN3D
	Performs a low level noise operation of the outdoor unit by an external input to the outdoor unit. (The unit can perform a NIGHT MODE operation under the following conditions: Outdoor air temperature below 30°C during cooling operation/Outdoor air temperature above 3°C during heating operation.)	NIGHT MODE or STEP DEMAND (level)*1	
	Forces the outdoor unit to perform a fan operation by receiving signals from the snow sensor.	Snow sensor signal input (level)	CN3S
Output	How to extract signals from the outdoor unit *It can be used as an operation status display device. *It can be used for an interlock operation with external devices.	Operation status of the compressor	CN51
		Error status	

*1. NIGHT MODE is valid when Dip SW4-7 on the outdoor unit are set to OFF. When Dip SW4-7 are set to ON, STEP DEMAND control is possible, using different configurations of NIGHT MODE input and compressor ON/OFF input settings.

SW4-7:OFF (Compressor ON/OFF, NIGHT MODE)

CN3D 1-3P	Compressor ON/OFF
Open	OFF
Short-circuit	ON

CN3D 1-2P	NIGHT MODE
Open	OFF
Short-circuit	ON

SW4-7:ON (STEP DEMAND)

		CN3D 1-2P	
		Open	Short-circuit
CN3D 1-3P	Open	100% (not on the on-DEMAND control)	75%
	Short-circuit	0%	50%

Note the following steps to be taken when using the STEP DEMAND
(Example) When switching from 100% to 50%

Demand control steps						
	(Wrong)	100%	→	0%	→	50%
	(Correct)	100%	→	75%	→	50%

If the step listed as the wrong example above is taken, thermo may go off.
The percentage of the demand listed in the table above is an approximate value based on the compressor volume and does not necessarily correspond with the capacity.

Example of wiring connection

■ CN51

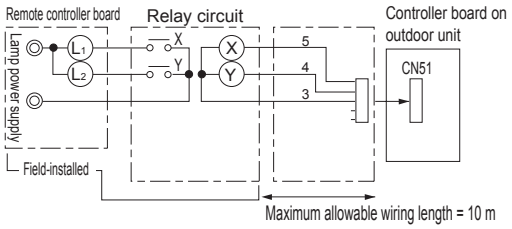

L1 : Error indicator lamp/freeze prevention output
L2 : Compressor operation display lamp
X,Y : Relay (For 12V DC coil rating 0.9 W or below)

■ CN3S

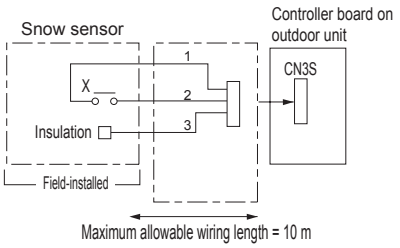

X: Snow sensor (Contact Minimum applied load 12V DC 1 mA)

■ CN3D

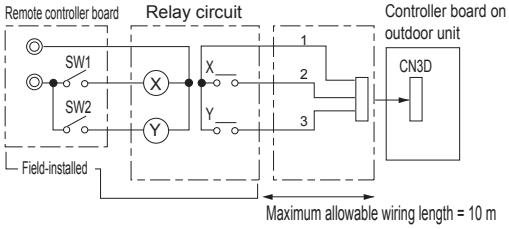

SW1 : NIGHT MODE command or Compressor ON/OFF
SW2 : Compressor ON/OFF command
X,Y : Relay (Contact Minimum applied load 12V DC 1 mA)

[3] Sample System Connection

Examples of typical system connection are shown on pages 24 to 52.

(1) An example of a system to which an MA remote controller is connected

O: Applicable, - : Non-applicable

	System configuration	Connection to the system controller	Address start up for indoor and outdoor units	Unit models		Pages	Notes
				Y Series	R2 Series		
1.	System with one outdoor unit	ON	Automatic address setup	O	O	P24, P25	
2.	System with one outdoor unit	ON	Manual address setup	O	O	P26-P28	Connection of multiple LOSSNAY units
3.	Grouping of units in a system with multiple outdoor units	ON	Manual address setup	O	O	P30-P32	
4.	System with one outdoor unit	With connection to transmission line for centralized control	Manual address setup	O	O	P34-P36	
5.	System with one outdoor unit	With connection to transmission line for centralized control	Manual address setup	-	O	P38-P40	Connection of multiple BC controllers
6.	System with one outdoor unit	With connection to indoor-outdoor transmission line	Manual address setup	O	O	P42-P44	

(2) An example of a system to which an M-NET remote controller is connected

O: Applicable, - : Non-applicable

	System configuration	Connection to the system controller	Address start up for indoor and outdoor units	Unit models		Pages	Notes
				Y Series	R2 Series		
1.	System with one outdoor unit	With connection to transmission line for centralized control	Manual address setup	O	O	P46-P48	

(3) An example of a system to which both MA remote controller and M-NET remote controller are connected

O: Applicable, - : Non-applicable

	System configuration	Connection to the system controller	Address start up for indoor and outdoor units	Unit models		Pages	Notes
				Y Series	R2 Series		
1.	System with one outdoor unit	With connection to transmission line for centralized control	Manual address setup	O	O	P50-P52	

[4] An Example of a System to which an MA Remote Controller is connected

1. System with one outdoor unit (automatic address setup for both indoor and outdoor units)

Sample control wiring

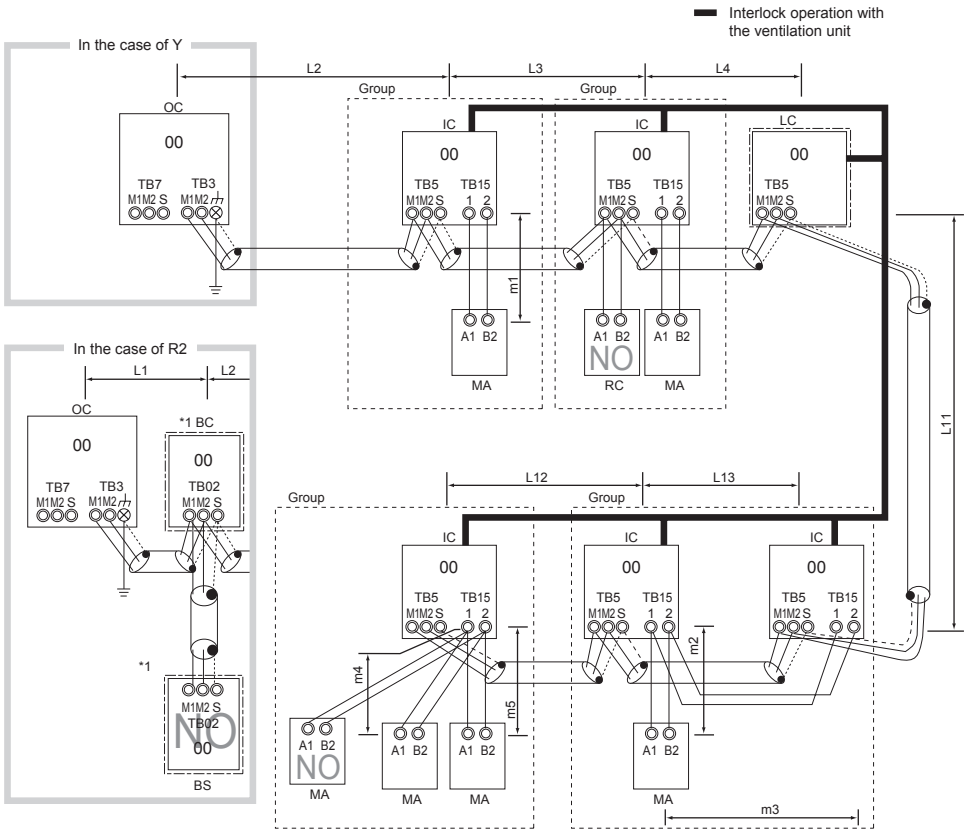

*1 BC and BS are found only in the R2 system.
When BS is connected to the system, automatic address setup is not available.

Don'ts	Maximum allowable length
1. M-NET remote controller and MA remote controller cannot both be connected to the same group of indoor units. 2. No more than 2 MA remote controllers can be connected to a group of indoor units. 3. A transmission booster must be connected to a system to which more than 26 indoor units including one or more indoor units of 72 model or above are connected. 4. Automatic address setup is not available if start-stop input (CN32, CN51, CN41) is used for a group operation of indoor units, or if a sub BC controller is connected to the system. Refer to "[4] 2. Manual address setup for both indoor and outdoor units". 5. To connect more than 2 LOSSNAY units to indoor units in the same system, refer to the next section "[4] 2. An example of a system with one outdoor unit to which 2 or more LOSSNAY units are connected".	(1) Indoor/outdoor transmission line Maximum distance (1.25mm^2 [AWG16] or larger) (L1)* +L2+L3+L4≦200m [656ft] (L1)* +L2+L12+L13≦200m [656ft] *L1 is applicable only in the R2 system. (2) Transmission line for centralized control No connection is required. (3) MA remote controller wiring Maximum overall line length (0.3 to 1.25mm^2 [AWG22 to 16]) m1≦200m [656ft] m2+m3≦200m [656ft] m4+m5≦200m [656ft] When connected to the terminal block on the MA simple remote controller, use cables that meet the cable size specifications 0.75-1.25mm^2 [AWG18 to 14].

Wiring method/address setting method

1) Indoor/outdoor transmission line
Daisy-chain terminals M1 and M2 on the terminal block for indoor-outdoor transmission line (TB3) on the outdoor unit (OC), terminals M1 and M2 of the terminal block for indoor-outdoor transmission line (TB02) on the BC controller (BC), and terminals M1 and M2 on the terminal block for indoor-outdoor transmission line (TB5) on each indoor unit (IC). (Non-polarized 2-core cable)
•Only use shielded cables.
[Shielded cable connection]
To ground the shielded cable, daisy-chain the ground terminal on the outdoor unit (OC), S terminals on the terminal block (TB3) on the terminal block (TB1) on the BC controller (BC), and the S terminal on the terminal block (TB5) on the indoor unit (IC).
2) Transmission line for centralized control
No connection is required.
3) MA remote controller wiring
Connect terminals 1 and 2 on the terminal block for MA remote controller line (TB15) on the indoor unit (IC) to the terminal block on the MA remote controller (MA). (Non-polarized 2-core cable)
•MA remote controllers can be connected to the indoor units of type C or later.
[When 2 remote controllers are connected to the system]
When 2 remote controllers are connected to the system, connect terminals 1 and 2 of the terminal block (TB15) on the indoor unit (IC) to the terminal block on the two MA remote controllers.
•Set one of the MA remote controllers to sub. (Refer to MA remote controller function selection (4 [3]2.) or the installation manual for the MA remote controller for the setting method.)
[Group operation of indoor units]
To perform a group operation of indoor units (IC), daisy-chain terminals 1 and 2 on the terminal block (TB15) on all indoor units (IC) in the same group, and then connect terminals 1 and 2 on the terminal block (TB15) on the indoor unit on one end to the terminal block on the MA remote controller. (Non-polarized 2-core cable)
•To perform a group operation of indoor units that have different functions, refer to [4] 2.
4) LOSSNAY connection
Connect terminals M1 and M2 on the terminal block (TB5) on the indoor unit (IC) to the appropriate terminals on the terminal block (TB5) on LOSSNAY (LC). (Non-polarized 2-core cable)
•Interlock operation setting with all the indoor units in the same system will automatically be made.
•Refer to "[4] 2. Manual address setup for both indoor and outdoor units" in the following cases: performing an interlock operation of part of the indoor units in the system with a LOSSNAY unit, using LOSSNAY alone without interlocking it with any units, performing an interlock operation of more than 16 indoor units with a LOSSNAY unit, or connecting two or more LOSSNAY units to indoor units in the same system.
5) Switch setting
No address settings required.

Procedures	Unit or controller			Address setting range	Setting method	Notes	Factory setting
1	Indoor unit	Main unit	IC	No settings required.	-	•Port number setting is required by an R2 system. •To perform a group operation of indoor units that have different functions, refer to [4] 2.	00
		Sub unit	IC				
2	LOSSNAY		LC	No settings required.	-		00
3	MA remote controller	Main remote controller	MA	No settings required.	-		Main
		Sub remote controller	MA	Sub remote controller	Settings to be made according to the remote controller function selection		
4	Outdoor unit		OC	No settings required.	-		00
5	Auxiliary unit	BC controller	BC				

2. An example of a system with one outdoor unit to which 2 or more LOSSNAY units are connected (manual address setup for both indoor and outdoor units)

Sample control wiring

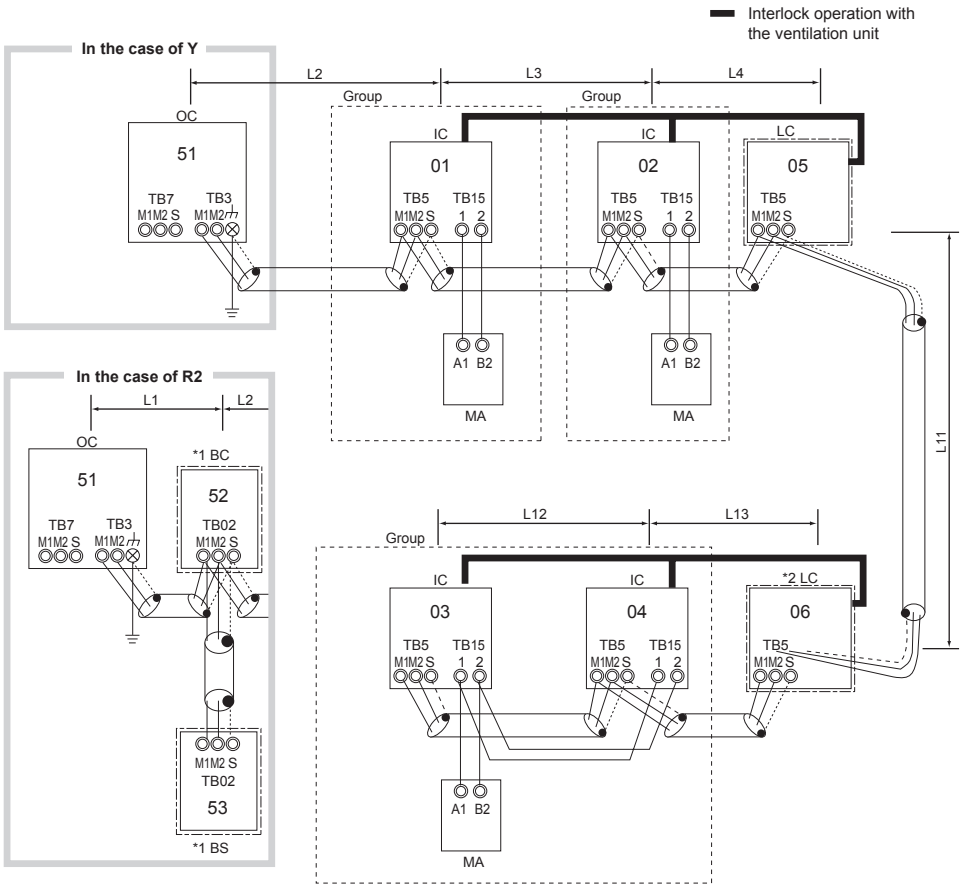

*1 BC and BS are found only in the R2 system.

Don'ts	Maximum allowable length
1. M-NET remote controller and MA remote controller cannot both be connected to the same group of indoor units. 2. No more than 2 MA remote controllers can be connected to a group of indoor units. 3. A transmission booster must be connected to a system to which more than 26 indoor units including one or more indoor units of 72 model or above are connected.	(1) Indoor/outdoor transmission line Same as [4] 1. (2) Transmission line for centralized control No connection is required. (3) MA remote controller wiring Same as [4] 1.

Wiring method
1) Indoor/outdoor transmission line Same as [4] 1. **[Shielded cable connection]** Same as [4] 1. 2) Transmission line for centralized control No connection is required. 3) MA remote controller wiring Same as [4] 1. **[When 2 remote controllers are connected to the system]** Same as [4] 1. **[Group operation of indoor units]** Same as [4] 1. 4) LOSSNAY connection Connect terminals M1 and M2 on the terminal block (TB5) on the indoor unit (IC) to the appropriate terminals on the terminal block (TB5) on LOSSNAY (LC). (Non-polarized 2-core cable) ♦Interlock setting between the indoor units and LOSSNAY units must be entered on the remote controller. (Refer to "Entering the Interlock Settings into the MA Remote Controller" or the installation manual for the MA remote controller for the setting method.) 5) Switch setting Address setting is required as follows.

Wiring method/address setting method

Procedures	Unit or controller			Address setting range	Setting method	Notes	Factory setting
1	Indoor unit	Main unit	IC	01 to 50	♦Assign the smallest address to the main unit in the group. ♦In an R2 system with a sub BC controller, make the settings for the indoor units in the following order. (i) Indoor unit to be connected to the main BC controller (ii) Indoor unit to be connected to sub BC controller 1 (iii) Indoor unit to be connected to sub BC controller 2 Make the settings for the indoor units in the way that the formula "(i) < (ii) < (iii)" is true.	♦Port number setting is required by an R2 system. ♦To perform a group operation of indoor units that have different functions, set the indoor unit in the group with the greatest number of functions as the main unit.	00
		Sub unit			Assign sequential numbers starting with the address of the main unit in the same group +1. (Main unit address +1, main unit address +2, main unit address +3, etc.)		
2	LOSSNAY		LC	01 to 50	Assign an arbitrary but unique address to each of these units after assigning an address to all indoor units.	None of these addresses may overlap any of the indoor unit addresses.	00
3	MA remote controller	Main remote controller	MA	No settings required.	-		Main
		Sub remote controller	MA	Sub remote controller	Settings to be made according to the remote controller function selection		
4	Outdoor unit		OC	51 to 100	The sum of the smallest address of the indoor units in the same system and 50	♦To set the address to 100, set it to 50. ♦If a given address overlaps any of the addresses that are assigned to the outdoor units or to the sub BC controller, use a different, unused address within the setting range. ♦The use of a sub BC controller requires the connection of a main BC controller.	00
5	Auxiliary unit	BC controller (main)	BC	52 to 100	Outdoor unit address + 1		
		BC controller (sub)	BS		Assign an address that equals the sum of the smallest address of the indoor units that are connected to the sub BC controller and 50.		

3. Group operation of units in a system with multiple outdoor units

Sample control wiring

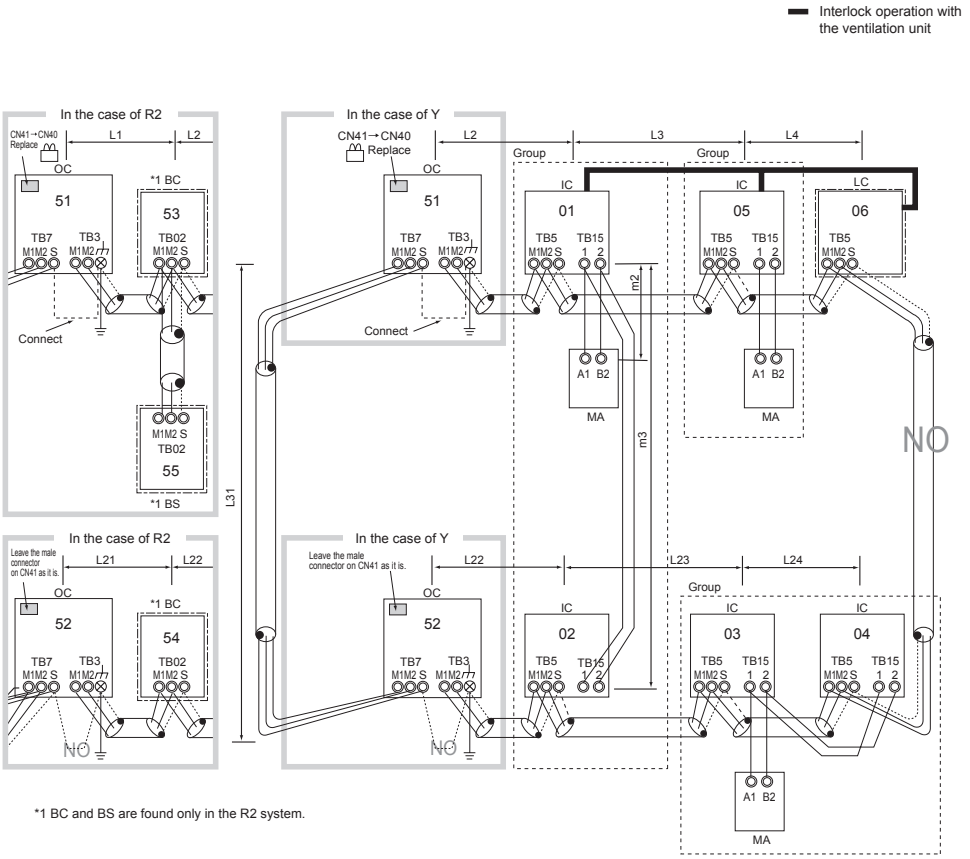

Don'ts	Maximum allowable length
1. M-NET remote controller and MA remote controller cannot both be connected to the same group of indoor units. 2. No more than 2 MA remote controllers can be connected to a group of indoor units. 3. Do not connect the terminal blocks (TB5) on the indoor units that are connected to different outdoor units with each other. 4. Replacement of male power supply switch connector (CN41) must be performed only on one of the outdoor units. 5. Provide grounding to S terminal on the terminal block for transmission line for centralized control (TB7) on only one of the outdoor units. 6. A transmission booster must be connected to a system to which more than 26 indoor units including one or more indoor units of 72 model or above are connected.	(1) Indoor/outdoor transmission line Maximum distance (1.25mm^2 [AWG16] or larger) (L1)* +L2+L3+L4≦200m [656ft] (L21)* +L22+L23+L24≦200m [656ft] *L1 and L21 are applicable only in the R2 system. (2) Transmission line for centralized control Maximum line distance via outdoor unit (1.25mm^2 [AWG16] or larger) (L1)* +L2+L3+L4+L31 +(L21)* +L22+L23+L24≦500m [1640ft] *L1 and L21 are applicable only in the R2 system. (3) MA remote controller wiring Same as [4] 1.

Wiring method
1) Indoor/outdoor transmission line Daisy-chain terminals M1 and M2 on the terminal block for indoor-outdoor transmission line (TB3) on the outdoor unit (OC), terminals M1 and M2 of the terminal block for indoor-outdoor transmission line (TB02) on the BC controller (BC and BS), and terminals M1 and M2 on the terminal block for indoor-outdoor transmission line (TB5) on each indoor unit (IC). (Non-polarized 2-core cable) •Only use shielded cables. **[Shielded cable connection]** Same as [4] 1. 2) Transmission line for centralized control Daisy-chain terminals M1 and M2 on the terminal block for centralized control transmission line (TB7). Disconnect the male connector on the controller board from the female power supply switch connector (CN41), and connect it to the female power supply switch connector (CN40). •Only use shielded cables. **[Shielded cable connection]** To ground the shielded cable, daisy-chain the S-terminals on the terminal block (TB7) on each of the outdoor units. Connect the S (shielded) terminal on the terminal block (TB7) on the outdoor unit whose CN41 was replaced with CN40 to the ground terminal (⏚) on the electric box. 3) MA remote controller wiring Same as [4] 1. **[When 2 remote controllers are connected to the system]** Same as [4] 1. **[Group operation of indoor units]** Same as [4] 1. 4) LOSSNAY connection Same as [4] 2. 5) Switch setting Address setting is required as shown on the next page.

Address setting method

Procedures	Unit or controller			Address setting range	Setting method	Notes	Factory setting
1	Indoor unit	Main unit	IC	01 to 50	♦Assign the smallest address to the main unit in the group. ♦In an R2 system with a sub BC controller, make the settings for the indoor units in the following order. (i) Indoor unit to be connected to the main BC controller (ii) Indoor unit to be connected to sub BC controller 1 (iii) Indoor unit to be connected to sub BC controller 2 Make the settings for the indoor units in the way that the formula "(i) < (ii) < (iii)" is true.	Port number setting is required by an R2 system.	00
		Sub unit			Assign sequential numbers starting with the address of the main unit in the same group +1. (Main unit address +1, main unit address +2, main unit address +3, etc.)		
2	LOSSNAY		LC	01 to 50	Assign an arbitrary but unique address to each of these units after assigning an address to all indoor units.	None of these addresses may overlap any of the indoor unit addresses.	00
3	MA remote controller	Main remote controller	MA	No settings required.	-		Main
		Sub remote controller	MA	Sub remote controller	Settings to be made according to the remote controller function selection		
4	Outdoor unit		OC	51 to 100	The sum of the smallest address of the indoor units in the same system and 50	To set the address to 100, set it to 50.	00
5	Auxiliary unit	BC controller (main)	BC	52 to 100	Outdoor unit address + 1	♦To set the address to 100, set it to 50. ♦If a given address overlaps any of the addresses that are assigned to the outdoor units or to the sub BC controller, use a different, unused address within the setting range. ♦The use of a sub BC controller requires the connection of a main BC controller.	00
		BC controller (sub)	BS		Assign an address that equals the sum of the smallest address of the indoor units that are connected to the sub BC controller and 50.		

4. An example of a system in which a system controller is connected to the transmission line for centralized control

Sample control wiring

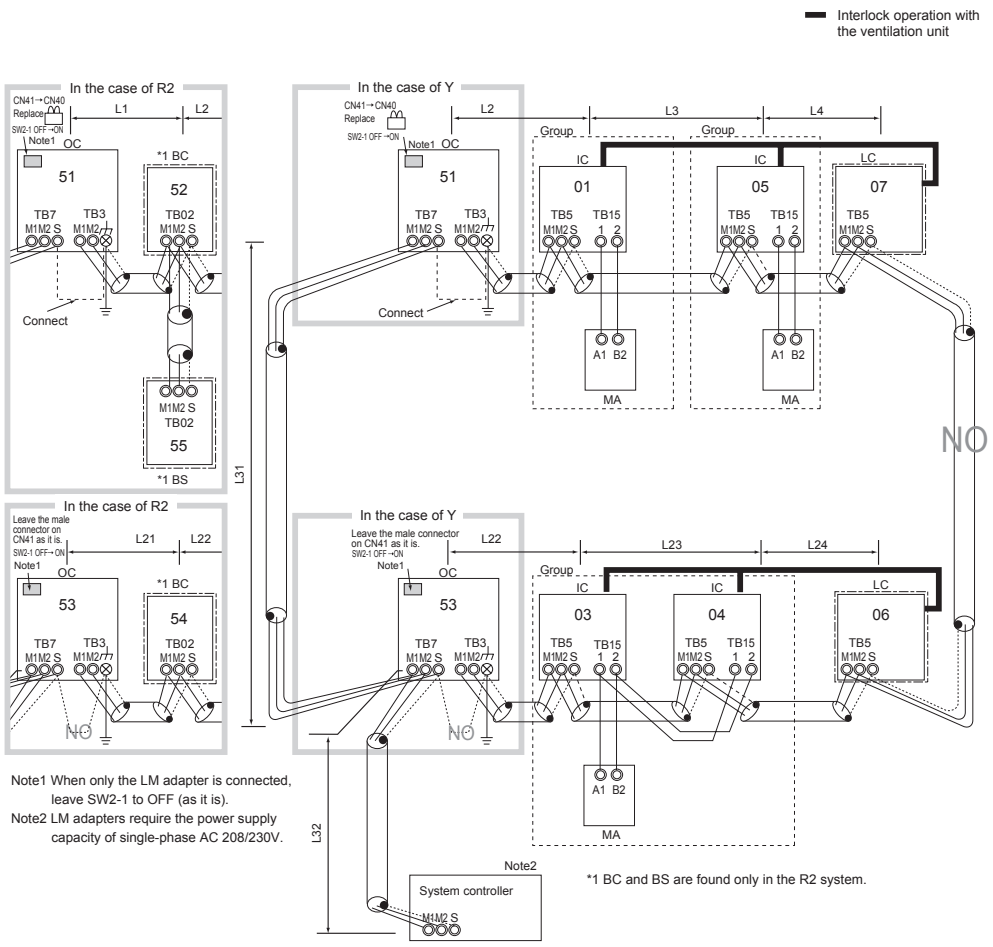

Don'ts	Maximum allowable length
1. M-NET remote controller and MA remote controller cannot both be connected to the same group of indoor units. 2. No more than 2 MA remote controllers can be connected to a group of indoor units. 3. Do not connect the terminal blocks (TB5) on the indoor units that are connected to different outdoor units with each other. 4. Replacement of male power supply switch connector (CN41) must be performed only on one of the outdoor units. 5. Provide grounding to S terminal on the terminal block for transmission line for centralized control (TB7) on only one of the outdoor units. 6. A transmission booster must be connected to a system to which more than 26 indoor units including one or more indoor units of 72 model or above are connected.	(1) Indoor/outdoor transmission line Same as [4] 3. (2) Transmission line for centralized control Maximum line distance via outdoor unit (1.25mm^2 [AWG16] or larger) L32+L31+(L1)* +L2+L3+L4≦500m [1640ft] L32+(L21)* +L22+L23+L24≦500m [1640ft] L1+L2+L3+L4+L31 +(L21)* +L22+L23+L24≦500m [1640ft] *L1 and L21 are applicable only in the R2 system. (3) MA remote controller wiring Same as [4] 1.

Wiring method
1) Indoor/outdoor transmission line Same as [4] 3. **[Shielded cable connection]** Same as [4] 1. 2) Transmission line for centralized control Daisy-chain terminals M1 and M2 on the terminal block for transmission line for centralized control (TB7) on each outdoor unit (OC). Disconnect the male connector on the controller board from the female power supply switch connector (CN41), and connect it to the female power supply switch connector (CN40) on only one of the outdoor units (OC). Set the central control switch (SW2-1) on the controller board on all OC to ON. •Only use shielded cables. **[Shielded cable connection]** Same as [4] 3. 3) MA remote controller wiring Same as [4] 1. **[When 2 remote controllers are connected to the system]** Same as [4] 1. **[Group operation of indoor units]** Same as [4] 1. 4) LOSSNAY connection Connect terminals M1 and M2 on the terminal block (TB5) on the indoor unit (IC) to the appropriate terminals on the terminal block for indoor-outdoor transmission line (TB5) on LOSSNAY (LC). (Non-polarized 2-core cable) •Indoor units must be interlocked with the LOSSNAY unit using the system controller. (Refer to the operation manual for the system controller for the setting method.) Interlock setting from the remote controller is required if the ON/OFF remote controller alone or the LM adapter alone is connected. 5) Switch setting Address setting is required as shown on the next page.

Address setting method

Procedures	Unit or controller			Address setting range	Setting method	Notes	Factory setting
1	Indoor unit	Main unit	IC	01 to 50	♦Assign the smallest address to the main unit in the group. ♦In an R2 system with a sub BC controller, make the settings for the indoor units in the following order. (i) Indoor unit to be connected to the main BC controller (ii) Indoor unit to be connected to sub BC controller 1 (iii) Indoor unit to be connected to sub BC controller 2 Make the settings for the indoor units in the way that the formula "(i) < (ii) < (iii)" is true.	Port number setting is required by an R2 system.	00
		Sub unit			Assign sequential numbers starting with the address of the main unit in the same group +1. (Main unit address +1, main unit address +2, main unit address +3, etc.)		
2	LOSSNAY		LC	01 to 50	Assign an arbitrary but unique address to each of these units after assigning an address to all indoor units.	None of these addresses may overlap any of the indoor unit addresses.	00
3	MA remote controller	Main remote controller	MA	No settings required.	-	Enter the same indoor unit group settings on the system controller as the ones that were entered on the MA remote controller.	Main
		Sub remote controller	MA	Sub remote controller	Settings to be made according to the remote controller function selection		
4	Outdoor unit		OC	51 to 100	The sum of the smallest address of the indoor units in the same system and 50	To set the address to 100, set it to 50.	00
5	Auxiliary unit	BC controller (main)	BC	52 to 100	Outdoor unit address + 1	♦To set the address to 100, set it to 50. ♦If a given address overlaps any of the addresses that are assigned to the outdoor units or to the sub BC controller, use a different, unused address within the setting range. ♦The use of a sub BC controller requires the connection of a main BC controller.	00
		BC controller (sub)	BS		Assign an address that equals the sum of the smallest address of the indoor units that are connected to the sub BC controller and 50.		

5. An example of an R2 system to which multiple BC controllers are connected (a system in which a system controller is connected to the transmission line for centralized control).

Sample control wiring

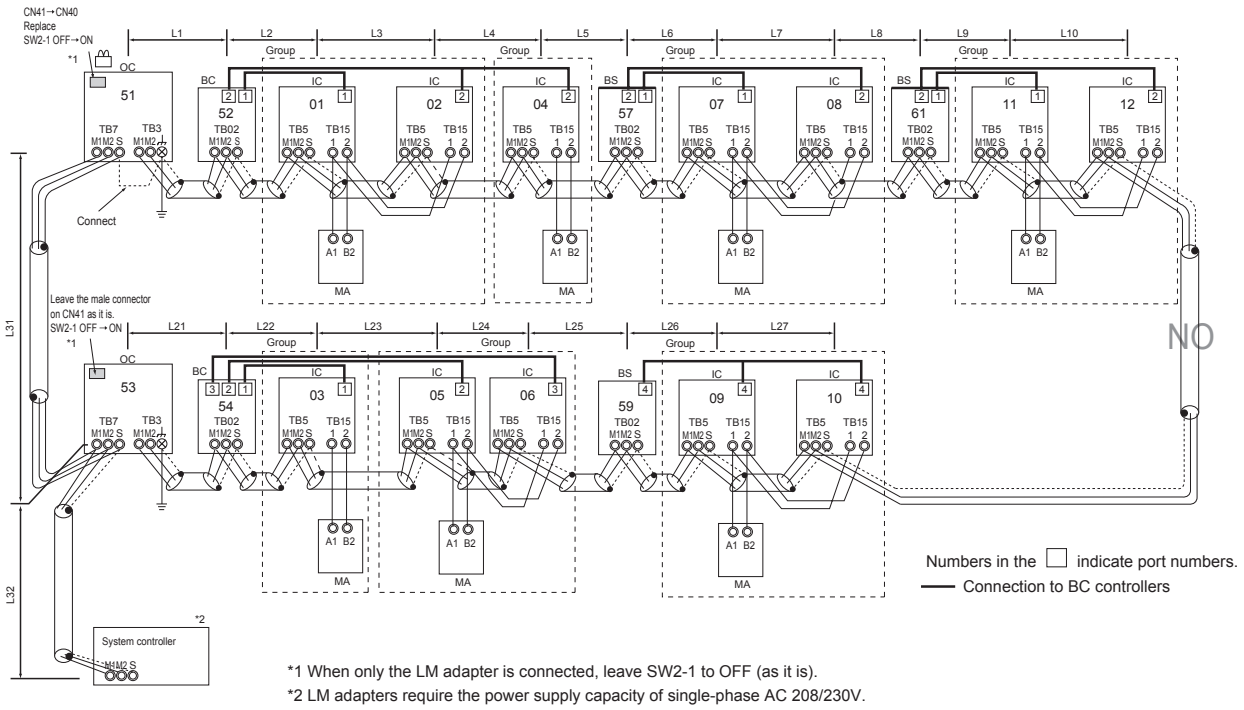

*1 When only the LM adapter is connected, leave SW2-1 to OFF (as it is).
*2 LM adapters require the power supply capacity of single-phase AC 208/230V.

Don'ts	Maximum allowable length
1. M-NET remote controller and MA remote controller cannot both be connected to the same group of indoor units. 2. No more than 2 MA remote controllers can be connected to a group of indoor units. 3. Do not connect the terminal blocks (TB5) on the indoor units that are connected to different outdoor units with each other. 4. Replacement of male power supply switch connector (CN41) must be performed only on one of the outdoor units. 5. Provide grounding to S terminal on the terminal block for transmission line for centralized control (TB7) on only one of the outdoor units.	(1) Indoor/outdoor transmission line Maximum distance (1.25mm^2 [AWG16] or larger) L1+L2+L3+L4+L5+L6+L7+L8+L9+L10≦200m [656ft] L21+L22+L23+L24+L25+L26+L27≦200m [656ft] (2) Transmission line for centralized control Maximum line distance via outdoor unit (1.25mm^2 [AWG16] or larger) L32+L31+L1+L2+L3+L4 +L5+L6+L7+L8+L9+L10≦500m [1640ft] L32+L21+L22+L23+L24+L25+L26+L27≦500m [1640ft] L1+L2+L3+L4+L5+L6+L7+L8+L9+L10+L31 +L21+L22+L23+L24+L25+L26+L27≦500m [1640ft] (3) MA remote controller wiring Same as [4] 1.

Wiring method
1) Indoor/outdoor transmission line Daisy-chain terminals M1 and M2 on the terminal block for indoor-outdoor transmission line (TB3) on the outdoor unit (OC), terminals M1 and M2 of the terminal block for indoor-outdoor transmission line (TB02) on the main BC controller (BC) and the sub BC controller (BS), and terminals M1 and M2 on the terminal block for indoor-outdoor transmission line (TB5) on each indoor unit (IC). (Non-polarized 2-core cable) •Only use shielded cables. **[Shielded cable connection]** Same as [4] 1. 2) Transmission line for centralized control Same as [4] 4. **[Shielded cable connection]** Same as [4] 3. 3) MA remote controller wiring Same as [4] 1. **[When 2 remote controllers are connected to the system]** Same as [4] 1. **[Group operation of indoor units]** Same as [4] 1. 4) LOSSNAY connection Same as [4] 4. 5) Switch setting Address setting is required as shown on the next page.

Address setting method

Procedures	Unit or controller			Address setting range	Setting method	Notes	Factory setting
1	Indoor unit	Main unit	IC	01 to 50	♦Assign the smallest address to the main unit in the group. ♦In an R2 system with a sub BC controller, make the settings for the indoor units in the following order. (i) Indoor unit to be connected to the main BC controller (ii) Indoor unit to be connected to sub BC controller 1 (iii) Indoor unit to be connected to sub BC controller 2 Make the settings for the indoor units in the way that the formula "(i) < (ii) < (iii)" is true.	Port number setting is required by an R2 system.	00
		Sub unit			Assign sequential numbers starting with the address of the main unit in the same group +1. (Main unit address +1, main unit address +2, main unit address +3, etc.)		
2	LOSSNAY		LC	01 to 50	Assign an arbitrary but unique address to each of these units after assigning an address to all indoor units.	None of these addresses may overlap any of the indoor unit addresses.	00
3	MA remote controller	Main remote controller	MA	No settings required.	-	Enter the same indoor unit group settings on the system controller as the ones that were entered on the MA remote controller.	Main
		Sub remote controller	MA	Sub remote controller	Settings to be made according to the remote controller function selection		
4	Outdoor unit		OC	51 to 100	The sum of the smallest address of the indoor units in the same system and 50	To set the address to 100, set it to 50.	00
5	Auxiliary unit	BC controller (main)	BC	52 to 100	Outdoor unit address + 1	♦To set the address to 100, set it to 50. ♦If addresses that are assigned to the main BC controller overlap any of the addresses that are assigned to the outdoor units or to the sub BC controller, use a different, unused address within the setting range. ♦The use of a sub BC controller requires the connection of a main BC controller.	00
		BC controller (sub)	BS	51 to 100	Assign an address that equals the sum of the smallest address of the indoor units that are connected to the sub BC controller and 50.		

6. An example of a system in which a system controller is connected to the indoor-outdoor transmission line (except LM adapter)

Sample control wiring

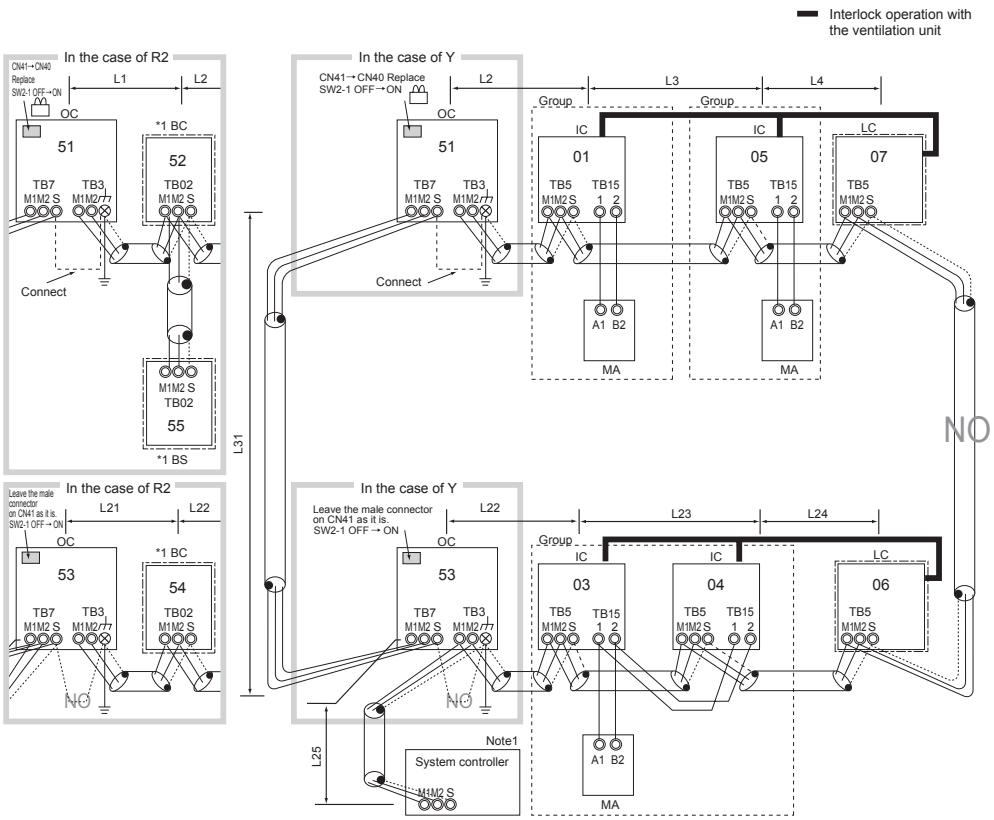

*1 BC and BS are found only in the R2 system.

Note1 LM adapters cannot be connected to the indoor-outdoor transmission line.

Don'ts	Maximum allowable length
1. M-NET remote controller and MA remote controller cannot both be connected to the same group of indoor units. 2. No more than 2 MA remote controllers can be connected to a group of indoor units. 3. Do not connect the terminal blocks (TB5) on the indoor units that are connected to different outdoor units with each other. 4. Replacement of male power supply switch connector (CN41) must be performed only on one of the outdoor units. 5. Provide grounding to S terminal on the terminal block for transmission line for centralized control (TB7) on only one of the outdoor units. 6. A maximum of 3 system controllers can be connected to the indoor-outdoor transmission line, with the exception that only one G-50 may be connected. 7. When the total number of indoor units exceeds 26, it may not be possible to connect a system controller on the indoor-outdoor transmission line. 8. In a system to which more than 18 indoor units including one or more indoor units of 72 model or above are connected, there may be cases in which the system controller cannot be connected to the indoor-outdoor transmission line.	(1) Indoor/outdoor transmission line Maximum distance (1.25mm^2 [AWG16] or larger) (L1)* +L2+L3+L4≦200m [656ft] (L21)* +L22+L23+L24≦200m [656ft] L25≦200m [656ft] *L1 and L21 are applicable only in the R2 system. (2) Transmission line for centralized control Maximum line distance via outdoor unit (1.25mm^2 [AWG16] or larger) L25+L31+(L1)* +L2+L3+L4≦500m [1640ft] (L1)* +L2+L3+L4+L31 +(21)* +L22+L23+L24≦500m [1640ft] *L1 and L21 are applicable only in the R2 system. (3) MA remote controller wiring Same as [4] 1.

Wiring method
1) Indoor/outdoor transmission line Daisy-chain terminals M1 and M2 on the terminal block for indoor-outdoor transmission line (TB3) on the outdoor unit (OC), terminals M1 and M2 of the terminal block for indoor-outdoor transmission line (TB02) on the BC controller (BC and BS), terminals M1 and M2 on the terminal block for indoor-outdoor transmission line (TB5) on each indoor unit (IC), and terminals M1 and M2 on the system controller. (Non-polarized 2-core cable) ♦Only use shielded cables. **[Shielded cable connection]** To ground the shielded cable, daisy-chain the ground terminal on the outdoor unit and on the terminal block (TB1) on the BC and BC, the S terminal on the terminal block (TB5) on the indoor unit, and the S terminal on the system controller. 2) Transmission line for centralized control Same as [4] 4. **[Shielded cable connection]** Same as [4] 3. 3) MA remote controller wiring Same as [4] 1. **[When 2 remote controllers are connected to the system]** Same as [4] 1. **[Group operation of indoor units]** Same as [4] 1. 4) LOSSNAY connection Connect terminals M1 and M2 on the terminal block (TB5) on the indoor units (IC) to the appropriate terminals on the terminal block for indoor-outdoor transmission line (TB5) on LOSSNAY (LC). (Non-polarized 2-core cable) ♦Indoor units must be interlocked with the LOSSNAY unit using the system controller. (Refer to the operation manual for the system controller for the setting method.) Interlock setting from the remote controller is required if the ON/OFF remote controller alone is connected. 5) Switch setting Address setting is required as shown on the next page.

Address setting method

Procedures	Unit or controller			Address setting range	Setting method	Notes	Factory setting
1	Indoor unit	Main unit	IC	01 to 50	♦Assign the smallest address to the main unit in the group. ♦In an R2 system with a sub BC controller, make the settings for the indoor units in the following order. (i) Indoor unit to be connected to the main BC controller (ii) Indoor unit to be connected to sub BC controller 1 (iii) Indoor unit to be connected to sub BC controller 2 Make the settings for the indoor units in the way that the formula "(i) < (ii) < (iii)" is true.	Port number setting is required by an R2 system.	00
		Sub unit			Assign sequential numbers starting with the address of the main unit in the same group +1. (Main unit address +1, main unit address +2, main unit address +3, etc.)		
2	LOSSNAY		LC	01 to 50	Assign an arbitrary but unique address to each of these units after assigning an address to all indoor units.	None of these addresses may overlap any of the indoor unit addresses.	00
3	MA remote controller	Main remote controller	MA	No settings required.	-	Enter the same indoor unit group settings on the system controller as the ones that were entered on the MA remote controller.	Main
		Sub remote controller	MA	Sub remote controller	Settings to be made according to the remote controller function selection		
4	Outdoor unit		OC	51 to 100	The sum of the smallest address of the indoor units in the same system and 50	To set the address to 100, set it to 50.	00
5	Auxiliary unit	BC controller (main)	BC	52 to 100	Outdoor unit address + 1	♦To set the address to 100, set it to 50. ♦If a given address overlaps any of the addresses that are assigned to the outdoor units or to the sub BC controller, use a different, unused address within the setting range. ♦The use of a sub BC controller requires the connection of a main BC controller.	00
		BC controller (sub)	BS		Assign an address that equals the sum of the smallest address of the indoor units that are connected to the sub BC controller and 50.		

[5] An Example of a System to which an M-NET Remote Controller is connected

1. An example of a system in which a system controller is connected to the transmission line for central control

Sample control wiring

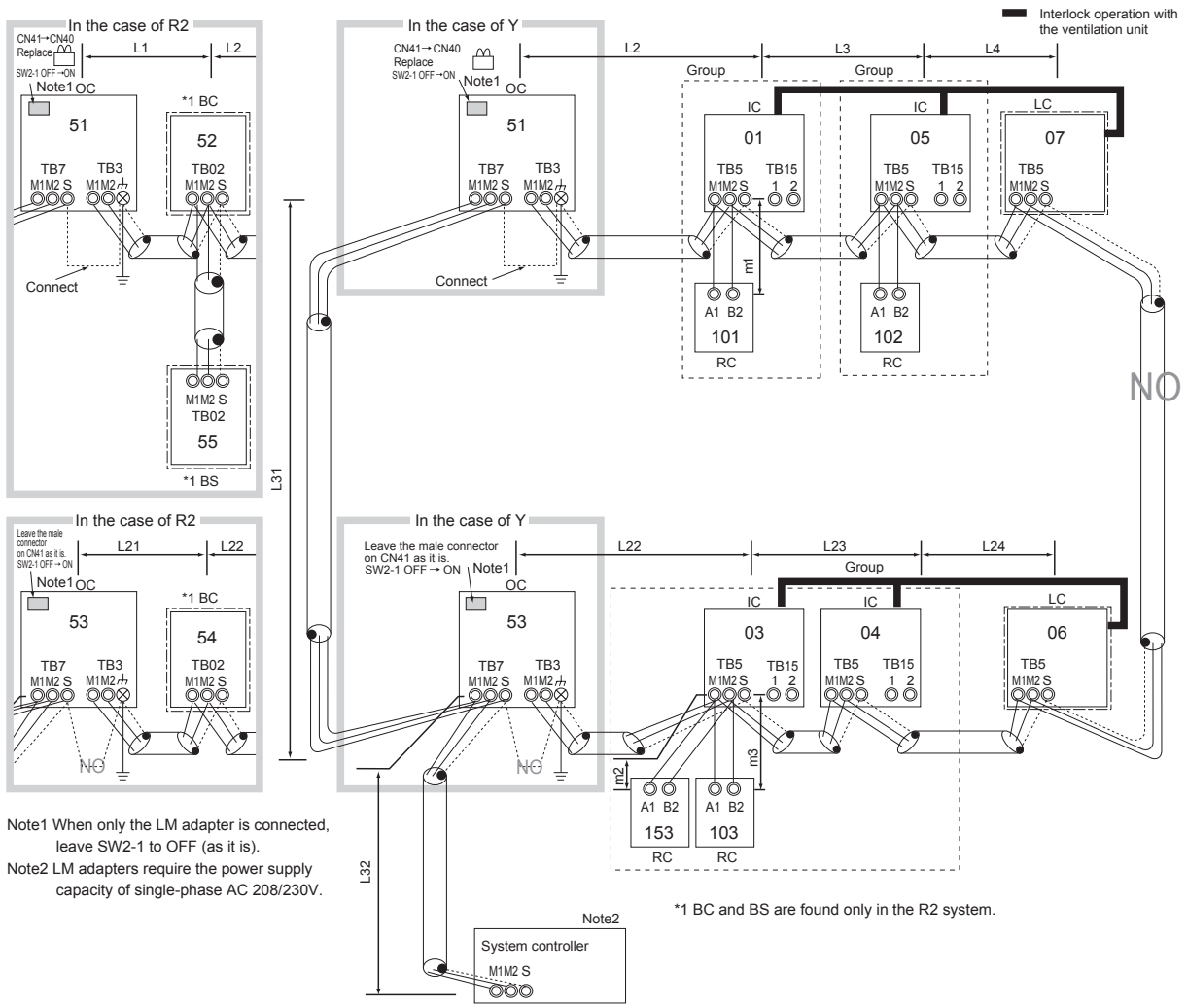

Note1 When only the LM adapter is connected, leave SW2-1 to OFF (as it is).
Note2 LM adapters require the power supply capacity of single-phase AC 208/230V.

*1 BC and BS are found only in the R2 system.

Don'ts	Maximum allowable length
1. M-NET remote controller and MA remote controller cannot both be connected to the same group of indoor units. 2. No more than 2 M-NET remote controllers can be connected to a group of indoor units. 3. Do not connect the terminal blocks (TB5) on the indoor units that are connected to different outdoor units with each other. 4. When connecting a system controller to the transmission line for centralized control or performing a group operation of units in a system with multiple outdoor units, the replacement of male power supply switch connector (CN41) with CN40 must be performed only on one of the outdoor units in the system. 5. Connect the S (shielded) terminal of the terminal block for transmission line for centralized control (TB7) on the outdoor unit whose male connector of the CN41 was plugged into CN40 to the ground terminal (⏚) on the unit. 6. A transmission booster must be connected to a system in which the total number of connected indoor units exceeds 20 (19 with one BC, 18 with one BC and BS each). 7. A transmission booster must be connected to a system to which more than 16 indoor units (15 with one BC, 14 with one BC and BS each) including one or more indoor units of 72 model or above are connected	(1) Indoor/outdoor transmission line Same as [4] 3. (2) Transmission line for centralized control Same as [4] 4. (3) M-NET remote controller wiring Maximum overall line length (0.3 to 1.25mm^2 [AWG22 to 16]) m1≦10m [32ft] m2+m3≦10m [32ft] If the standard-supplied cable must be extended, use a cable with a diameter of 1.25mm^2 [AWG16]. The section of the cable that exceeds 10m [32ft] must be included in the maximum indoor-outdoor transmission line distance described in (1).

Wiring method
1) Indoor/outdoor transmission line Same as [4] 3. **[Shielded cable connection]** Same as [4] 1. 2) Transmission line for centralized control Same as [4] 4. **[Shielded cable connection]** Same as [4] 3. 3) M-NET remote controller wiring Connect terminals M1 and M2 on the terminal block for indoor-outdoor transmission line (TB5) on the indoor units (IC) to appropriate terminals on the terminal block on M-NET remote controller (RC). (Non-polarized 2-core cable) **[When 2 remote controllers are connected to the system]** When 2 remote controllers are connected to the system, connect terminals M1 and M2 of the terminal block on the IC (TB5) to the terminal block on the two RC remote controllers. **[Group operation of indoor units]** To perform a group operation of indoor units, connect terminals M1 and M2 on the terminal block (TB5) on the main indoor unit in the group, to the terminal block on the M-NET remote controller. (Non-polarized 2-core cable) ♦M-NET remote controller is connectable anywhere on the indoor-outdoor transmission line. ♦To perform a group operation of indoor units that have different functions, set the indoor unit in the group with the greatest number of functions as the main unit. 4) LOSSNAY connection Same as [4] 4. 5) Switch setting Address setting is required as shown on the next page.

Address setting method

Procedures	Unit or controller			Address setting range	Setting method	Notes	Factory setting
1	Indoor unit	Main unit	IC	01 to 50	♦Assign the smallest address to the main unit in the group. ♦In an R2 system with a sub BC controller, make the settings for the indoor units in the following order. (i) Indoor unit to be connected to the main BC controller (ii) Indoor unit to be connected to sub BC controller 1 (iii) Indoor unit to be connected to sub BC controller 2 Make the settings for the indoor units in the way that the formula "(i) < (ii) < (iii)" is true.	♦Enter the indoor unit group settings on the system controller (MELANS). ♦Port number setting is required by an R2 system.	00
		Sub unit			Assign sequential numbers starting with the address of the main unit in the same group +1. (Main unit address +1, main unit address +2, main unit address +3, etc.)		
2	LOSSNAY		LC	01 to 50	Assign an arbitrary but unique address to each of these units after assigning an address to all indoor units.	None of these addresses may overlap any of the indoor unit addresses.	00
3	M-NET remote controller	Main remote controller	RC	101 to 150	Add 100 to the main unit address in the group	♦It is not necessary to set the 100s digit. ♦To set the address to 200, set it to 00.	101
		Sub remote controller	RC	151 to 200	Add 150 to the main unit address in the group		
4	Outdoor unit		OC	51 to 100	The sum of the smallest address of the indoor units in the same system and 50	To set the address to 100, set it to 50.	00
5	Auxiliary unit	BC controller (main)	BC	52 to 100	Outdoor unit address + 1	♦To set the address to 100, set it to 50. ♦If addresses that are assigned to the main BC controller overlap any of the addresses that are assigned to the outdoor units or to the sub BC controller, use a different, unused address within the setting range. ♦The use of a sub BC controller requires the connection of a main BC controller.	00
		BC controller (sub)	BS		Assign an address that equals the sum of the smallest address of the indoor units that are connected to the sub BC controller and 50.		

[6] An Example of a System to which both MA Remote Controller and M-NET Remote Controller are connected

Sample control wiring

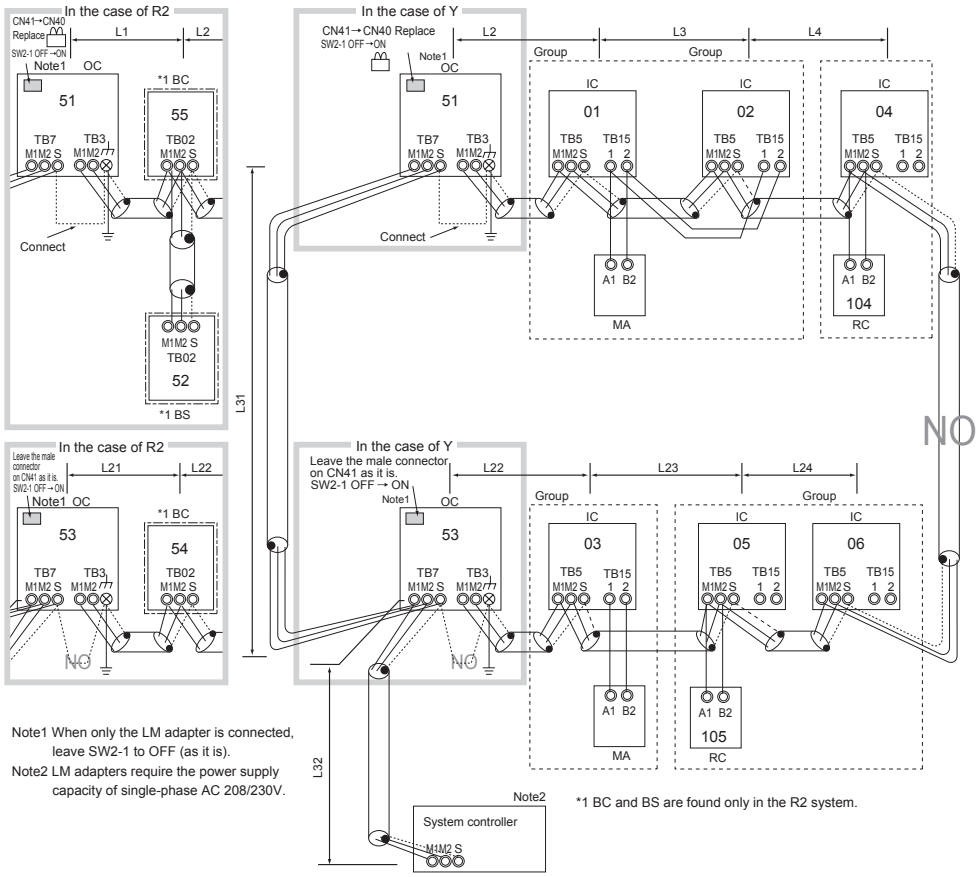

Note1 When only the LM adapter is connected, leave SW2-1 to OFF (as it is).
Note2 LM adapters require the power supply capacity of single-phase AC 208/230V.

*1 BC and BS are found only in the R2 system.

Don'ts	Maximum allowable length
1. Be sure to connect a system controller. 2. M-NET remote controller and MA remote controller cannot both be connected to the same group of indoor units. 3. No more than 2 M-NET remote controllers can be connected to a group of indoor units. 4. No more than 2 MA remote controllers can be connected to a group of indoor units. 5. Do not connect the terminal blocks (TB5) on the indoor units that are connected to different outdoor units with each other. 6. Replacement of male power supply switch connector (CN41) must be performed only on one of the outdoor units. 7. Provide grounding to S terminal on the terminal block for transmission line for centralized control (TB7) on only one of the outdoor units. 8. A transmission booster must be connected to a system in which the total number of connected indoor units exceeds 20 (19 with one BC, 18 with one BC and BS each). 9. A transmission booster must be connected to a system to which more than 16 indoor units (15 with one BC, 14 with one BC and BS each) including one or more indoor units of 72 model or above are connected.	(1) Indoor/outdoor transmission line Same as [4] 3. (2) Transmission line for centralized control Same as [4] 4. (3) MA remote controller wiring Same as [4] 1. (4) M-NET remote controller wiring Same as [4] 1.

Wiring method/address setting method

1) Indoor/outdoor transmission line
   Same as [4] 3.
   [Shielded cable connection]
   Same as [4] 1.
2) Transmission line for centralized control
   Same as [4] 4.
   [Shielded cable connection]
   Same as [4] 3.
3) MA remote controller wiring
   Same as [4] 1.
   [When 2 remote controllers are connected to the system]
   Same as [4] 1.
   [Group operation of indoor units]
   Same as [4] 1.
4) M-NET remote controller wiring
   Same as [4] 1.
   [When 2 remote controllers are connected to the system]
   Same as [4] 1.
   [Group operation of indoor units]
   Same as [4] 1.
5) LOSSNAY connection
   Same as [4] 4.
6) Switch setting
   Address setting is required as shown on the next page.

Procedures	Unit or controller				Address setting range	Setting method	Notes	Factory setting
1	Operation with the MA remote controller	Indoor unit	Main unit	IC	01 to 50	♦Assign the smallest address to the main unit in the group. ♦In an R2 system with a sub BC controller, make the settings for the indoor units in the following order. (i) Indoor unit to be connected to the main BC controller (ii) Indoor unit to be connected to sub BC controller 1 (iii) Indoor unit to be connected to sub BC controller 2 Make the settings for the indoor units in the way that the formula "(i) < (ii) < (iii)" is true.	♦Assign an address smaller than that of the indoor unit that is connected to the M-NET remote controller ♦Enter the same indoor unit group settings on the system controller as the ones that were entered on the MA remote controller. ♦Port number setting is required by an R2 system.	00
			Sub unit			Assign sequential numbers starting with the address of the main unit in the same group +1. (Main unit address +1, main unit address +2, main unit address +3, etc.)		
		MA remote controller	Main remote controller	MA	No settings required.	-		Main
			Sub remote controller	MA	Sub remote controller	Settings to be made according to the remote controller function selection		

Wiring method/address setting method

Procedures	Unit or controller				Address setting range	Setting method	Notes	Factory setting
2	Operation with the M-NET remote controller	Indoor unit	Main unit	IC	01 to 50	♦After assigning an address to all indoor units to be controlled from the MA remote controller, assign the smallest address to the main indoor unit in the group. ♦In an R2 system with a sub BC controller, make the settings for the indoor units in the following order. (i) Indoor unit to be connected to the main BC controller (ii) Indoor unit to be connected to sub BC controller 1 (iii) Indoor unit to be connected to sub BC controller 2 Make the settings for the indoor units in the way that the formula "(i) < (ii) < (iii)" is true.	♦Enter the indoor unit group settings on the system controller (MELANS). ♦Port number setting is required by an R2 system.	00
			Sub unit			Assign sequential numbers starting with the address of the main unit in the same group +1. (Main unit address +1, main unit address +2, main unit address +3, etc.)		
		M-NET remote controller	Main remote controller	RC	101 to 150	Add 100 to the main unit address in the group.	♦It is not necessary to set the 100s digit. ♦To set the address to 200, set it to 00.	101
			Sub remote controller	RC	151 to 200	Add 150 to the main unit address in the group.		
3	LOSSNAY			LC	01 to 50	Assign an arbitrary but unique address to each of these units after assigning an address to all indoor units.	None of these addresses may overlap any of the indoor unit addresses.	00
4	Outdoor unit			OC	51 to 100	The sum of the smallest address of the indoor units in the same system and 50	To set the address to 100, set it to 50.	00
5	Auxiliary unit	BC controller (main)		BC	52 to 100	Outdoor unit address + 1	♦To set the address to 100, set it to 50. ♦If a given address overlaps any of the addresses that are assigned to the outdoor units or to the sub BC controller, use a different, unused address within the setting range. ♦The use of a sub BC controller requires the connection of a main BC controller.	00
		BC controller (sub)		BS		Assign an address that equals the sum of the smallest address of the indoor units that are connected to the sub BC controller and 50.		

[7] Restrictions on Pipe Length

The refrigerant pipe from the outdoor unit is branched at the pipe end, and each branch is then connected to an indoor unit. Flare connections are used for the pipes on the indoor units and for the liquid pipes on the outdoor units. Flange connections are used for gas pipes on the outdoor units. Branched sections are brazed together.

⚠ WARNING

Do not let refrigerant (R410A) leak in the presence of an open flame or other heat source. When exposed to an open flame or other heat source, refrigerant will break down, generate poisonous gas, and pose a risk of gas poisoning. Do not weld in a confined space. Perform an air tightness test at the completion of pipe work.

Only use the type of refrigerant (R410A) that is indicated on the unit when installing or reinstalling the unit.

Infiltration of any other type of refrigerant or air into the unit may adversely affect the refrigerant cycle and may cause the pipes to burst or explode.

⚠ CAUTION

Do not use the existing refrigerant piping.

A large amount of chlorine that may be contained in the residual refrigerant and refrigerating machine oil in the existing piping may cause the refrigerating machine oil in the new unit to deteriorate.

Use refrigerant pipes made of phosphorus deoxidized copper. Keep the inner and outer surfaces of the pipes clean and free of such contaminants as sulfur, oxides, dust, dirt, shaving particles, oil, and water.

These types of contaminants inside the refrigerant pipes may cause the refrigerant oil to deteriorate.

Store the pipes to be installed indoors, and keep both ends of the pipes sealed until immediately before brazing. (Keep elbows and other joints wrapped in plastic.)

Infiltration of dust, dirt, or water into the refrigerant system may cause the refrigerating machine oil to deteriorate or cause the unit to malfunction.

Charge liquid refrigerant (as opposed to gaseous refrigerant) into the system.

If gaseous refrigerant is charged into the system, the composition of the refrigerant in the cylinder will change and may result in performance loss.

Do not use a charging cylinder.

If a charging cylinder is used, the composition of the refrigerant will change, and the unit may experience power loss.

1. PUHY

(1) Line branching

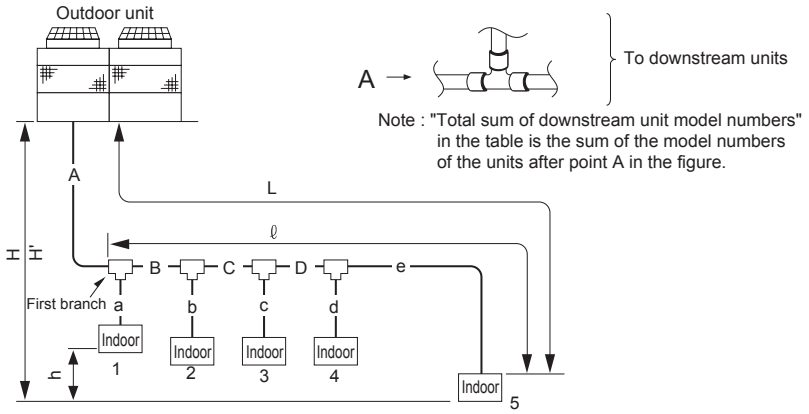

Unit: m [ft]

Operation			Pipe sections	Allowable length of pipes
Length	Total pipe length		A+B+C+D +a+b+c+d+e	300 [984] or less
	Total pipe length (L) from the outdoor unit to the farthest indoor unit		A+B+C+D+e	150 [492] or less
	Total pipe length from the first branch to the farthest indoor unit (ℓ)		B+C+D+e	40 [131] or less
Height difference	Between indoor and outdoor units	Outdoor unit above indoor unit	H	50 [164] or less
		Outdoor unit below indoor unit	H'	40 [131] or less
	Between indoor units		h	15 [49] or less

(2) Header branching

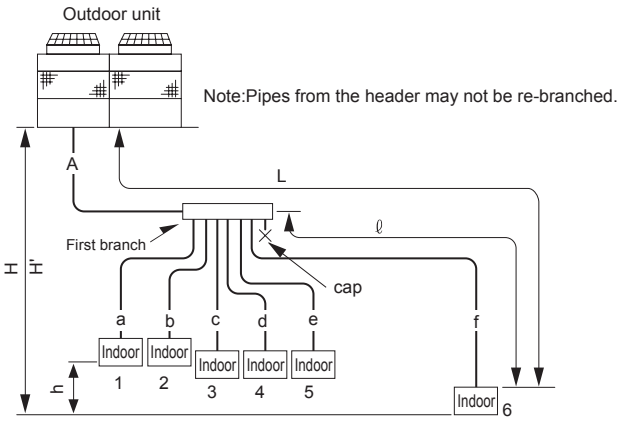

Unit: m [ft]

Operation			Pipe sections	Allowable length of pipes
Length	Total pipe length		A+a+b+c+d+e+f	300 [984] or less
	Total pipe length (L) from the outdoor unit to the farthest indoor unit		A+f	150 [492] or less
	Total pipe length from the first branch to the farthest indoor unit (ℓ)		f	40 [131] or less
Height difference	Between indoor and outdoor units	Outdoor unit above indoor unit	H	50 [164] or less
		Outdoor unit below indoor unit	H'	40 [131] or less
	Between indoor units		h	15 [49] or less

(3) A combination of line and header branching

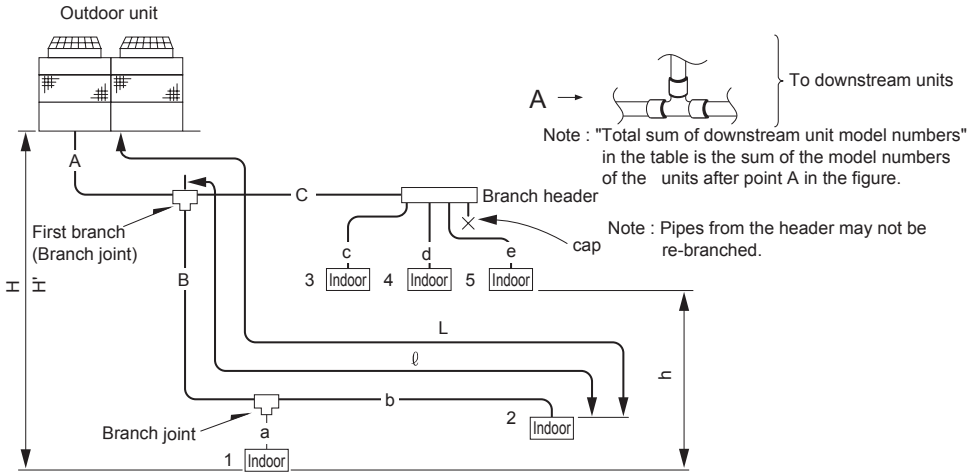

Unit: m [ft]

Operation			Pipe sections	Allowable length of pipes
Length	Total pipe length		A+B+C +a+b+c+d+e	300 [984] or less
	Total pipe length (L) from the outdoor unit to the farthest indoor unit		A+B+b	150 [492] or less
	Total pipe length from the first branch to the farthest indoor unit (ℓ)		B+b	40 [131] or less
Height difference	Between indoor and outdoor units	Outdoor unit above indoor unit	H	50 [164] or less
		Outdoor unit below indoor unit	H'	40 [131] or less
	Between indoor units		h	15 [49] or less

2. PURY

(1) Line branching

System that requires 16 BC controller ports or fewer

<System with only the main BC controller or standard BC controller>

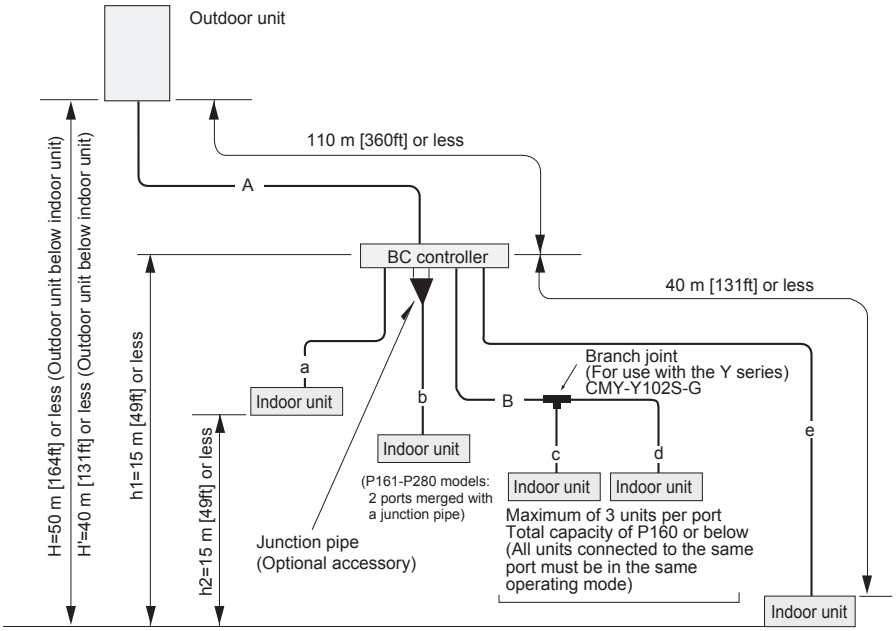

Unit: m [ft]

Operation			Pipe sections	Allowable length of pipes
Length	Total pipe length		A+B+a+b+c+d+e	300 [984] or less*1
	Total pipe length from the outdoor unit to the farthest indoor unit		A+e	150 [492] or less (Equivalent length 175 [574] or less)
	Between outdoor unit and BC controller		A	110 [360] or less
	Between BC controller and indoor unit		e	40 [131] or less*2
Height difference	Between indoor and outdoor units	Outdoor unit above indoor unit	H	50 [164] or less
		Outdoor unit below indoor unit	H'	40 [131] or less
	Between indoor unit and BC controller		h1	15 [49] or less (10 [32] or less)*3
	Between indoor units		h2	15 [49] or less (10 [32] or less)*3

*1. When the aggregate length of all pipes exceeds 300m [984ft], observe the restrictions in the figure titled "Restrictions on pipe length" below.

*2. When the overall pipe length between the BC controller and the farthest indoor unit exceeds 40m [131ft], observe the restrictions in the figure titled "Restrictions on pipe length" below. (Except the P96 models)

*3. When the capacity of the connected indoor units is P72 or above, use the figures in the parentheses as a reference.

* In the system to which indoor units of P72 model or above are connected, neither a branch joint nor a branch header may be used.

* Do not connect the P72 or P96 models of indoor units with other models of indoor units to the same port.

● Restrictions on pipe length

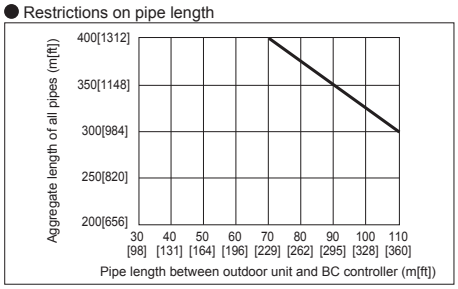

● The height difference and the pipe length between BC controller and indoor units (A)

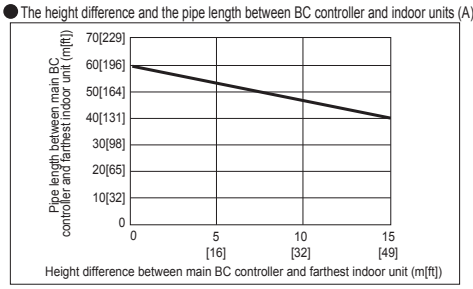

(2) Line branching

System that requires more than 16 BC controller ports or with multiple BC controllers

<System with both main and sub BC controllers>

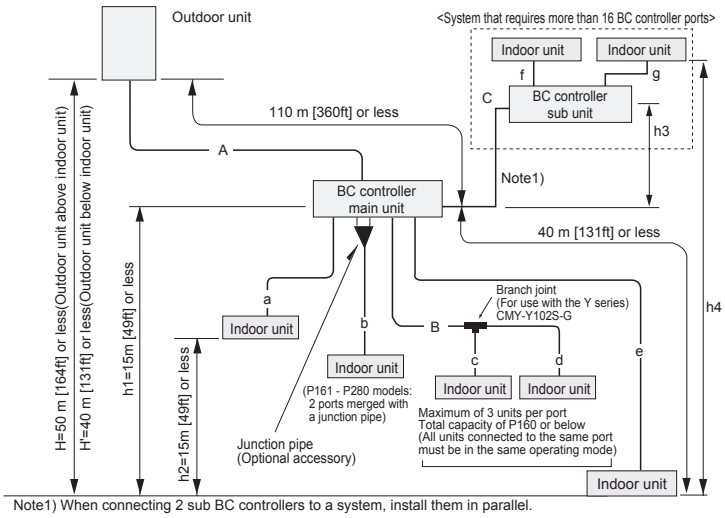

Note1) When connecting 2 sub BC controllers to a system, install them in parallel.

Unit: m [ft]

Operation			Pipe sections	Allowable length of pipes
Length	Total pipe length		A+B+C +a+b+c+d+e+f+g	300 [984] or less*1
	Total pipe length from the outdoor unit to the farthest indoor unit		A+C+g or C+g	150 [492] or less (Equivalent length 175 [574] or less)
	Between outdoor unit and BC controller		A	110 [360] or less
	Between BC controller and indoor unit		e or C+g	40 [131] or less*2
Height difference	Between indoor and outdoor units	Outdoor unit above indoor unit	H	50 [164] or less
		Outdoor unit below indoor unit	H'	40 [131] or less
	Between indoor unit and BC controller		h1	15 [49] or less (10 [32] or less)*3
	Between indoor units		h2	15 [49] or less (10 [32] or less)*3
	Between main BC controller and sub BC controller		h3	15 [49] or less
	Between indoor unit (main BC controller) and indoor unit (sub BC controller)		h4	15 [49] or less (10 [32] or less)*3*4

*1. When the aggregate length of all pipes exceeds 300m [984ft], observe the restrictions in the figure titled "Restrictions on pipe length" below.

*2. When the overall pipe length between the BC controller and the farthest indoor unit exceeds 40m [131ft], observe the restrictions in the figure titled "Restrictions on pipe length" below. (Except the P96 models)

*3. When the capacity of the connected indoor units is P72 or above, use the figures in the parentheses as a reference.

*4. When connecting 2 sub BC controllers to a system, observe the allowable length in the table above.

* A system that requires more than 16 BC controller ports requires two or three BC controllers (main and sub), and three pipes will be used between the main and the sub BC controllers.

* In the system to which indoor units of P72 model or above are connected, neither a branch joint nor a branch header may be used.

● Restrictions on pipe length

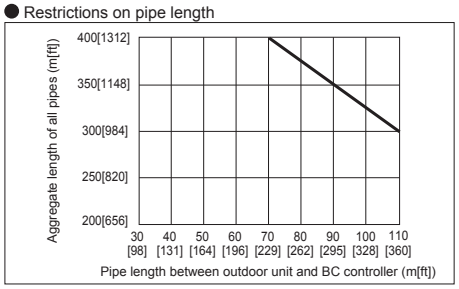

● The height difference and the pipe length between BC controller and indoor units (A)

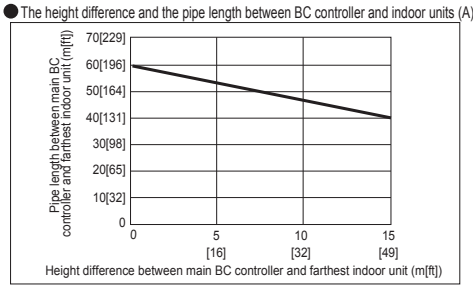

3. Refrigerant pipe size

(1) Between outdoor unit and BC controller (Part A)

Unit: mm [in]

<table>
<tr><th colspan="2" rowspan="2">Operation</th><th colspan="5">Outdoor unit</th></tr>
<tr><th>PURY-P72TGMU-A</th><th>PURY-P96TGMU-A</th><th>PURY-P108TGMU-A</th><th>PURY-P126TGMU-A</th><th>PURY-P144TGMU-A</th></tr>
<tr><td rowspan="2">Refrigerant pipe size</td><td>High-pressure pipe</td><td>ø15.88 [5/8"]</td><td colspan="3">ø19.05 [3/4"]</td><td>ø22.2 [7/8"]</td></tr>
<tr><td>Low-pressure pipe</td><td>ø19.05 [3/4"]</td><td colspan="2">ø22.2 [7/8"]</td><td colspan="2">ø28.58 [1-1/8"]</td></tr>
<tr><td rowspan="2">Connection to outdoor unit and BC controller</td><td>High-pressure pipe</td><td>ø15.88 [5/8"] (Brazed connection)</td><td colspan="3">ø19.05 [3/4"] (Brazed connection)</td><td>ø22.2 [7/8"] (Brazed connection)</td></tr>
<tr><td>Low-pressure pipe</td><td>ø19.05 [3/4"] (Brazed connection)</td><td colspan="2">ø22.2 [7/8"] (Brazed connection)</td><td colspan="2">ø28.58 [1-1/8"] (Brazed connection)</td></tr>
</table>

<table>
<tr><th colspan="2" rowspan="2">Operation</th><th colspan="5">Outdoor unit</th></tr>
<tr><th>PURY-P168TGMU-A</th><th>PURY-P192TGMU-A</th><th>PURY-P204TGMU-A</th><th>PURY-P216TGMU-A</th><th>PURY-P234TGMU-A</th></tr>
<tr><td rowspan="2">Refrigerant pipe size</td><td>High-pressure pipe</td><td colspan="2">ø22.2 [7/8"]</td><td colspan="3">ø28.58 [1-1/8"]</td></tr>
<tr><td>Low-pressure pipe</td><td colspan="5">ø28.58 [1-1/8"]</td></tr>
<tr><td rowspan="2">Connection to outdoor unit and BC controller</td><td>High-pressure pipe</td><td colspan="2">ø22.2 [7/8"] (Brazed connection)</td><td colspan="3">ø28.58 [1-1/8"] (Brazed connection)</td></tr>
<tr><td>Low-pressure pipe</td><td colspan="5">ø28.58 [1-1/8"] (Brazed connection)</td></tr>
</table>

(Note) Flanges with a short copper pipe are attached to the low-pressure pipes on the outdoor units.

(2) Between BC controller and indoor unit (Parts a, b, c, d, and e)

Unit: mm [in]

Operation		Indoor unit			
		06,08,12,15,18	24,27,30,36,48	72	96
Refrigerant pipe size	Liquid pipe	ø6.35 [1/4"]	ø9.52 [3/8"]		
	Gas pipe	ø12.7 [1/2"]	ø15.88 [5/8"]	ø19.05 [3/4"]	ø22.2 [7/8"]
Connection to outdoor unit (Flare connection for all models)	Liquid pipe	ø6.35 [1/4"]	ø9.52 [3/8"]		
	Gas pipe	ø12.7 [1/2"]	ø15.88 [5/8"]	ø19.05 [3/4"]	ø22.2 [7/8"]

(3) Between main BC controller and sub BC controller (Part C)

Unit: mm [in]

Operation		Indoor unit		
		-P72	P73-P108	P109-P126
Refrigerant pipe size (Brazed connection for all models)	Liquid pipe	ø9.52 [3/8"]		ø12.7 [1/2"]
	High-pressure gas pipe	ø15.88 [5/8"]	ø19.05 [3/4"]	
	Low-pressure gas pipe	ø19.05 [3/4"]	ø22.2 [7/8"]	ø28.58 [1-1/8"]

Select the proper size pipes for the main BC controller based on the total capacity of the indoor units that are connected to both of the sub BC controllers, and for the sub BC controller, on the total capacity of the indoor units that are connected to each sub BC controller.

(Note) Use the piping that is specified in Section "[3] Piping Materials" under "Read Before Servicing".

4. Connecting the BC controller

(1) Size of the pipe that fits the standard BC controller ports

P72-P126 models

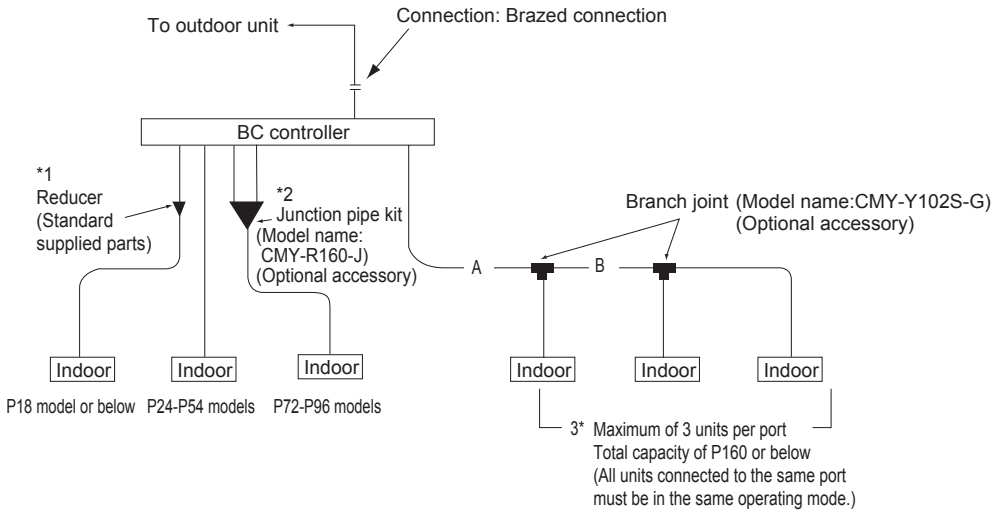

The ports of the BC controller accommodates the pipes on P18-P54 models of indoor units.
To connect other types of indoor units, follow the procedure below.

Unit: mm [in]

Operation		Pipe sections	
		High-pressure side (gas)	Low-pressure side (gas)
Outdoor unit side	PURY-P72TGMU-A	ø15.88 [5/8"] (Brazed connection)	ø19.05 [3/4"] (Brazed connection)
	PURY-P96TGMU-A PURY-P108TGMU-A	ø19.05 [3/4"] (Brazed connection)	ø22.2 [7/8"] (Brazed connection)
	PURY-P126TGMU-A		ø28.58 [1-1/8"] (Brazed connection)
Indoor unit side		ø9.52 [3/8"] (Flare connection)	ø15.88 [5/8"] (Flare connection)

* Standard BC controllers can only be connected to P72-126 models of outdoor units.

1) To connect P06-P18 models of indoor units use the reducer that is supplied with the BC controller.

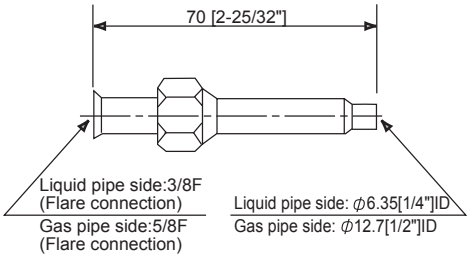

Note) Use the flare nut that is supplied with the BC controller.

2) To connect P72 or P96 models of indoor units (or when the total capacity of indoor units exceeds P55), use a junction pipe kit (model name: CMY-R160J) and merge the two nozzles.

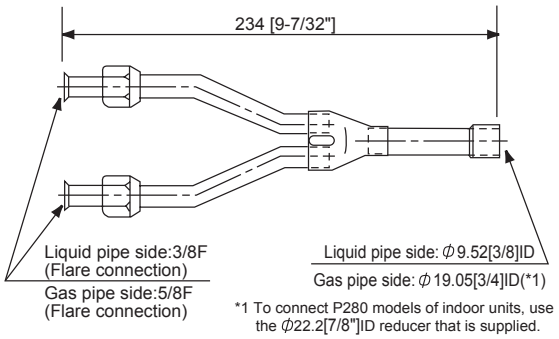

*1 To connect P280 models of indoor units, use the ϕ22.2[7/8"]ID reducer that is supplied.

Supplied with a thermal insulation cover

3) To connect multiple indoor units to a port (or to a junction pipe)
- Maximum total capacity of connected indoor units: P54 or below (in a system with a junction pipe: P96 or below)
- Maximum number of connectable indoor units: 3 units
- Branch joint: Use CMY-Y102S-G (optional accessory).
- Refrigerant pipe selection (size of the pipes in sections A and B in the figure above): Select the proper size pipes based on the total capacity of the downstream indoor units, using the table below as a reference.

Unit: mm [in]

Total capacity of indoor units	Liquid pipe	Gas pipe
P54 or below	ø9.52 [3/8"]	ø15.88 [5/8"]
P55-P72		ø19.05 [3/4"]
P73-P96		ø22.2 [7/8"] *1

*1. Use the pipe that is supplied.

(2) Size of the pipe that fits the main BC controller ports
P72-P234 models

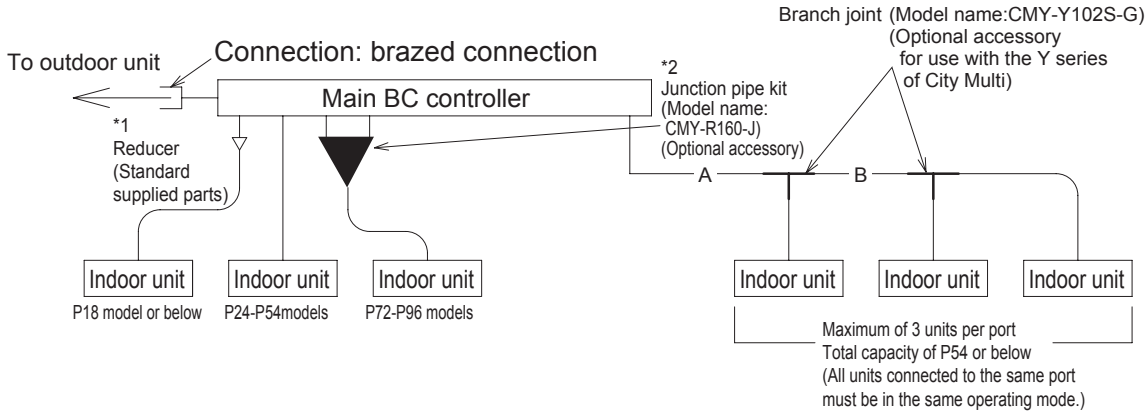

The ports of the BC controller accommodates the pipes on P24-P54 models of indoor units. To connect other types of indoor units, follow the procedure below.

1) To connect P06-P18 models of indoor units use the reducer that is supplied with the BC controller.
2) To connect P72 or P96 models of indoor units (or when the total capacity of indoor units exceeds P55), use a junction pipe kit (model name: CMY-R160J) and merge the two nozzles.
3) To connect multiple indoor units to a port (or to a junction pipe)
   - Maximum total capacity of connected indoor units: P54 or below (in a system with a junction pipe: P96 or below)
   - Maximum number of connectable indoor units: 3 units
   - Refrigerant pipe selection (size of the pipes in sections A and B in the figure above): Select the proper size pipes based on the total capacity of the downstream indoor units, using the table below as a reference.

Unit: mm [in]

Total capacity of indoor units	Liquid pipe	Gas pipe
P54 or below	ø9.52 [3/8"]	ø15.88 [5/8"]
P55-P72		ø19.05 [3/4"]
P73-P96		ø22.2 [7/8"]*1

*1. Use the pipe that is supplied.

Unit: mm [in]

Operation		Pipe sections	
		High pressure side	Low-pressure side
Outdoor unit side	PURY-P72TGMU-A	ø15.88 [5/8"] (Brazed connection)	ø19.05 [3/4"] (Brazed connection)
	PURY-P96TGMU-A	ø19.05 [3/4"] (Brazed connection)	ø22.2 [7/8"] (Brazed connection)
	PURY-P108TGMU-A		
	PURY-P126TGMU-A		ø28.58 [1-1/8"] (Brazed connection)
	PURY-P144TGMU-A	ø22.2 [7/8"] (Brazed connection)	ø28.58 [1-1/8"] (Brazed connection)
	PURY-P168TGMU-A		
	PURY-P192TGMU-A		
	PURY-P204TGMU-A	ø28.58 [1-1/8"] (Brazed connection)	
	PURY-P216TGMU-A		
	PURY-P234TGMU-A		
Indoor unit side		ø9.52 [3/8"] (Flare connection)	ø15.88 [5/8"] (Flare connection)

(3) Size of the pipe that fits the sub BC controller ports
P72-P234 models

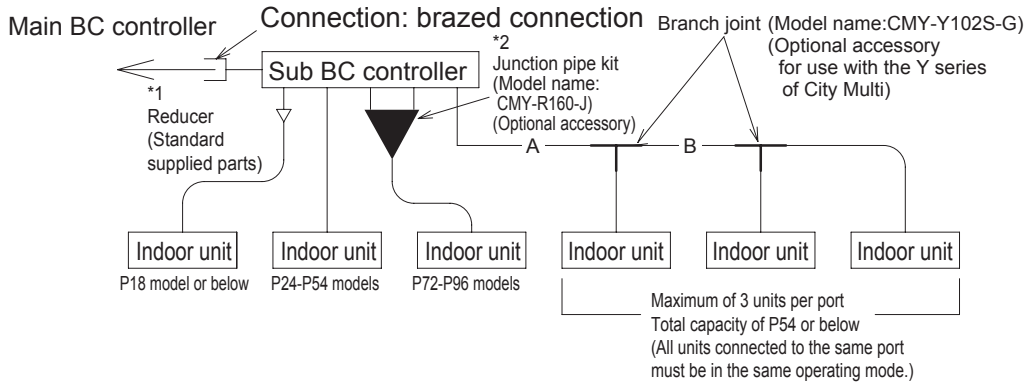

The ports of the BC controller accommodates the pipes on P24-P54 models of indoor units. To connect other types of indoor units, follow the procedure below.

1) To connect P06-P18 models of indoor units use the reducer that is supplied with the BC controller.
2) To connect P72 or P96 models of indoor units (or when the total capacity of indoor units exceeds P55), use a junction pipe kit (model name: CMY-R160J) and merge the two nozzles.
3) To connect multiple indoor units to a port (or to a junction pipe)
   - Maximum total capacity of connected indoor units: P54 or below (in a system with a junction pipe: P96 or below)
   - Maximum number of connectable indoor units: 3 units
   - Refrigerant pipe selection (size of the pipes in sections A and B in the figure above): Select the proper size pipes based on the total capacity of the downstream indoor units, using the table below as a reference.

Unit: mm [in]

Total capacity of indoor units	Liquid pipe	Gas pipe
P54 or below	ø9.52 [3/8"]	ø15.88 [5/8"]
P55-P72		ø19.05 [3/4"]
P73-P96		ø22.2 [7/8"]*1

*1. Use the pipe that is supplied.

Unit: mm [in]

Operation		Pipe sections		
	Total capacity of the indoor units that are connected to the BC controller in question	High-pressure side (gas)	Low-pressure side (gas)	Liquid pipe side
On the BC controller side	P72 model or below	ø15.88 [5/8"] (Brazed connection)	ø19.05 [3/4"] (Brazed connection)	ø9.52 [3/8"] (Brazed connection)
	P73-P108 models	ø19.05 [3/4"] (Brazed connection)	ø22.2 [7/8"] (Brazed connection)	
	P109 model or above		ø28.58 [1-1/8"] (Brazed connection)	ø12.7 [1/2"] (Brazed connection)

III Outdoor Unit / BC Controller Components

[1] Outdoor Unit Components and Refrigerant Circuit 67
[2] Control Box of the Outdoor Unit 79
[3] Outdoor Unit Circuit Board 81
[4] BC Controller (Under the panel) 86
[5] Control Box of the BC Controller 88
[6] BC Controller Circuit Board 89

[1] Outdoor Unit Components and Refrigerant Circuit

1. PUHY-P72, P96 and P108 models

(1) Appearance

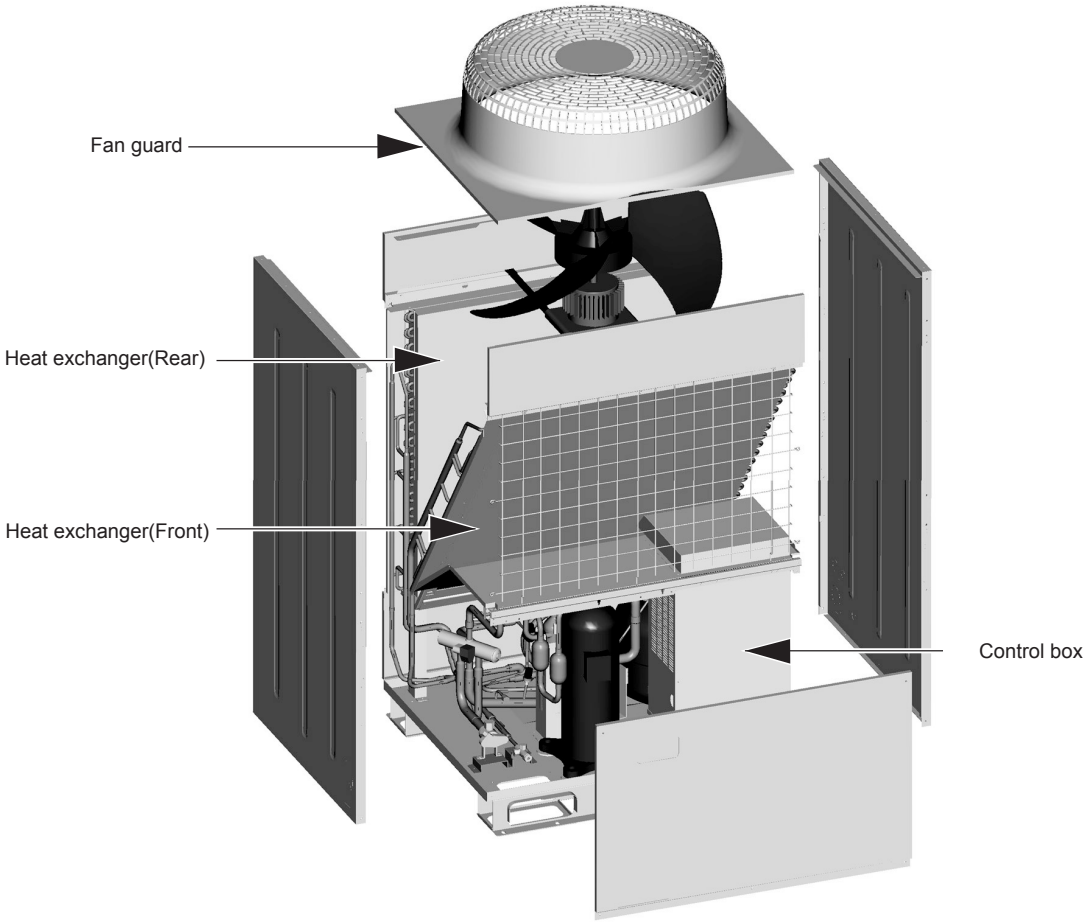

(2) Front view of a refrigerant circuit

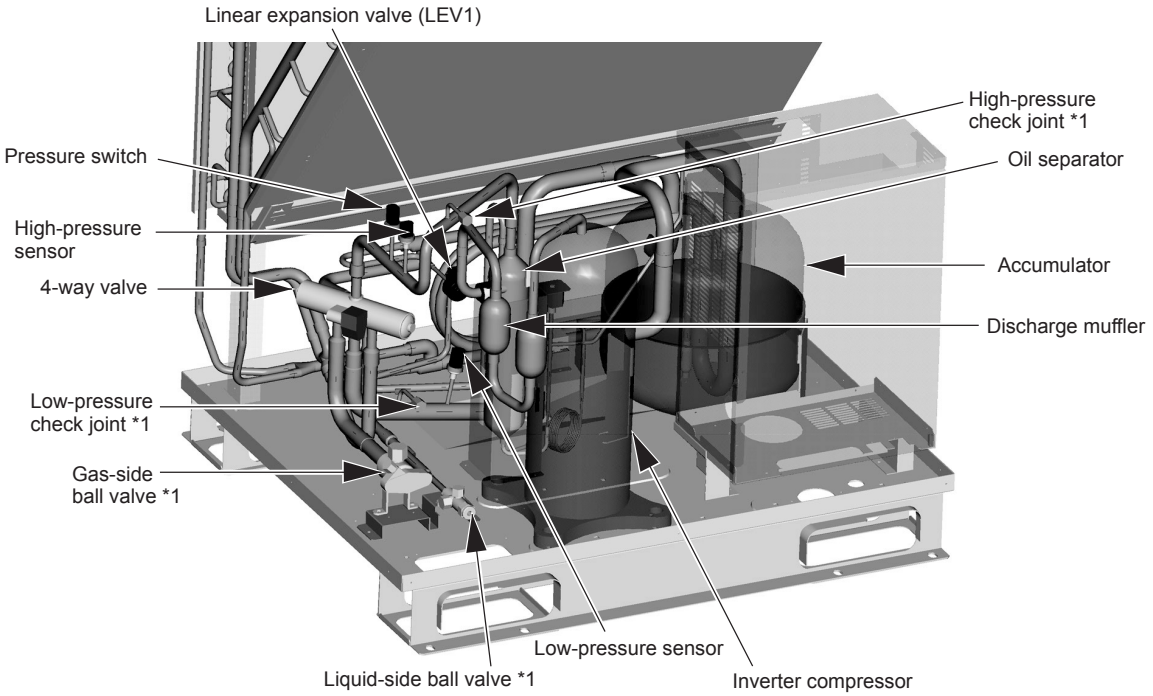

*1 The diameter of this charge plug is 5/16".
Use the adapter that is supplied with the product if using tools designed primarily for use with 1/4"-diameter materials.

(3) Rear view of a refrigerant circuit

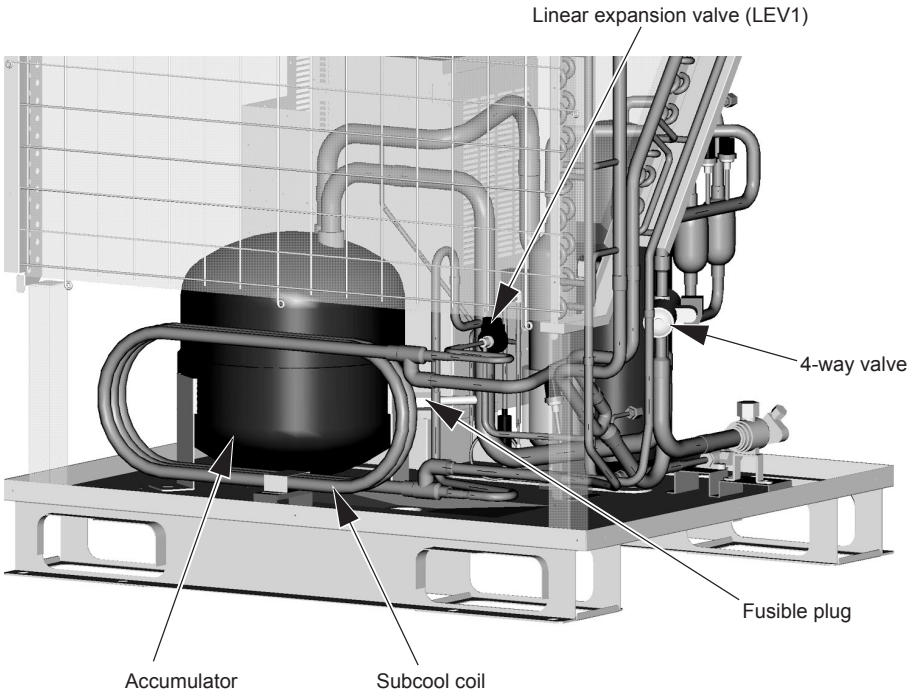

2. PUHY-P126 and P144 models

(1) Appearance

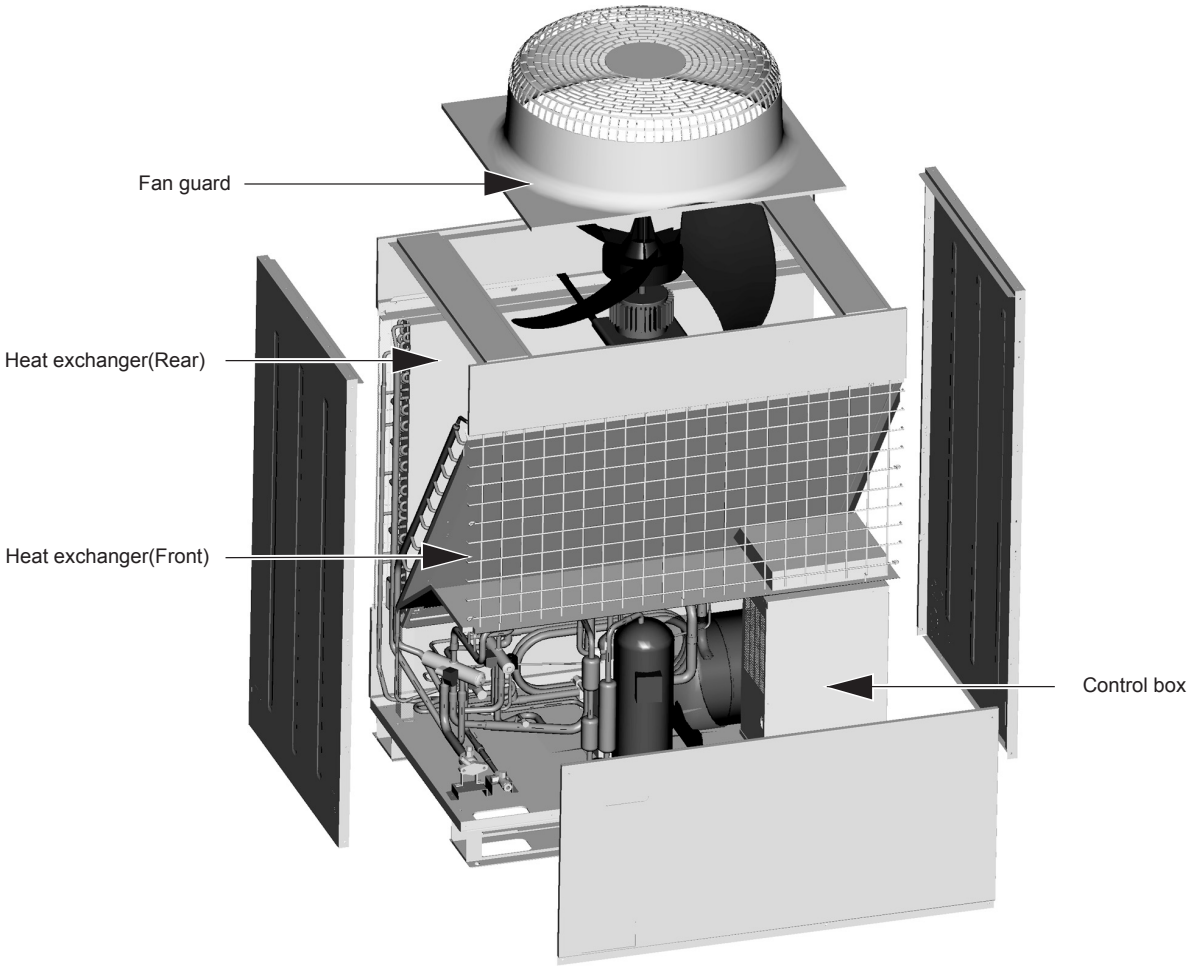

(2) Front view of a refrigerant circuit

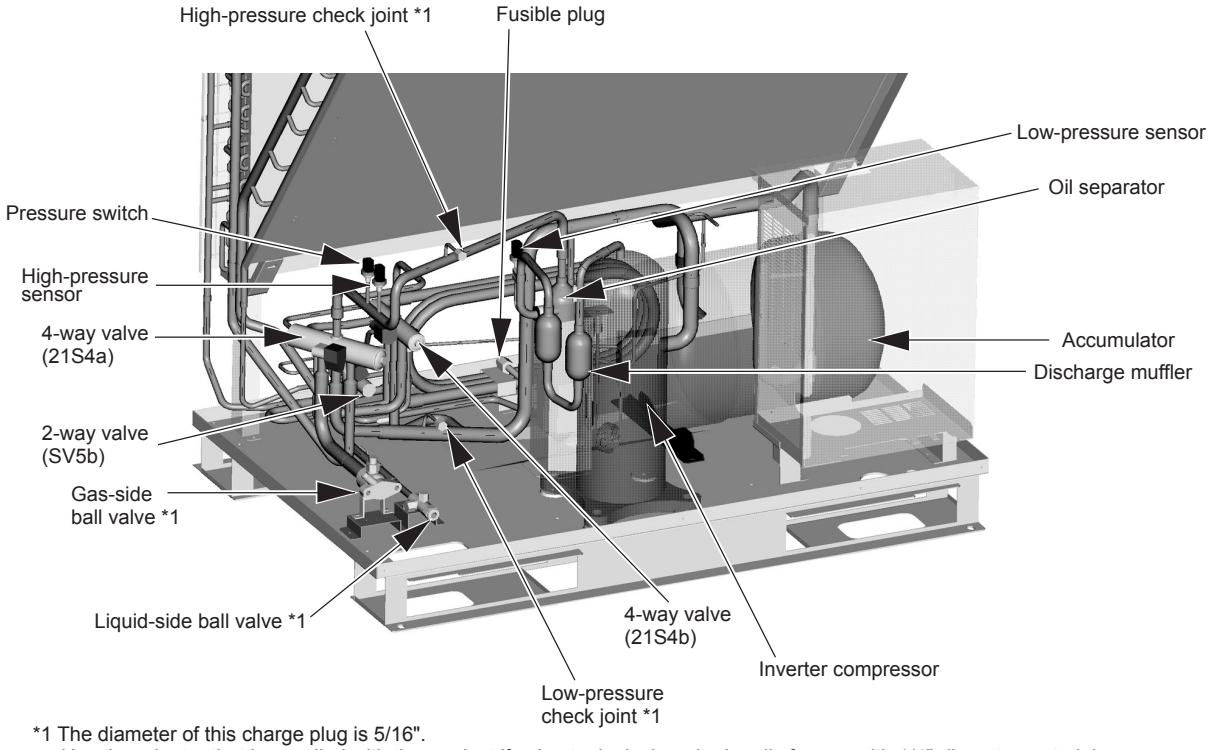

*1 The diameter of this charge plug is 5/16".
Use the adapter that is supplied with the product if using tools designed primarily for use with 1/4"-diameter materials.

(3) Rear view of a refrigerant circuit

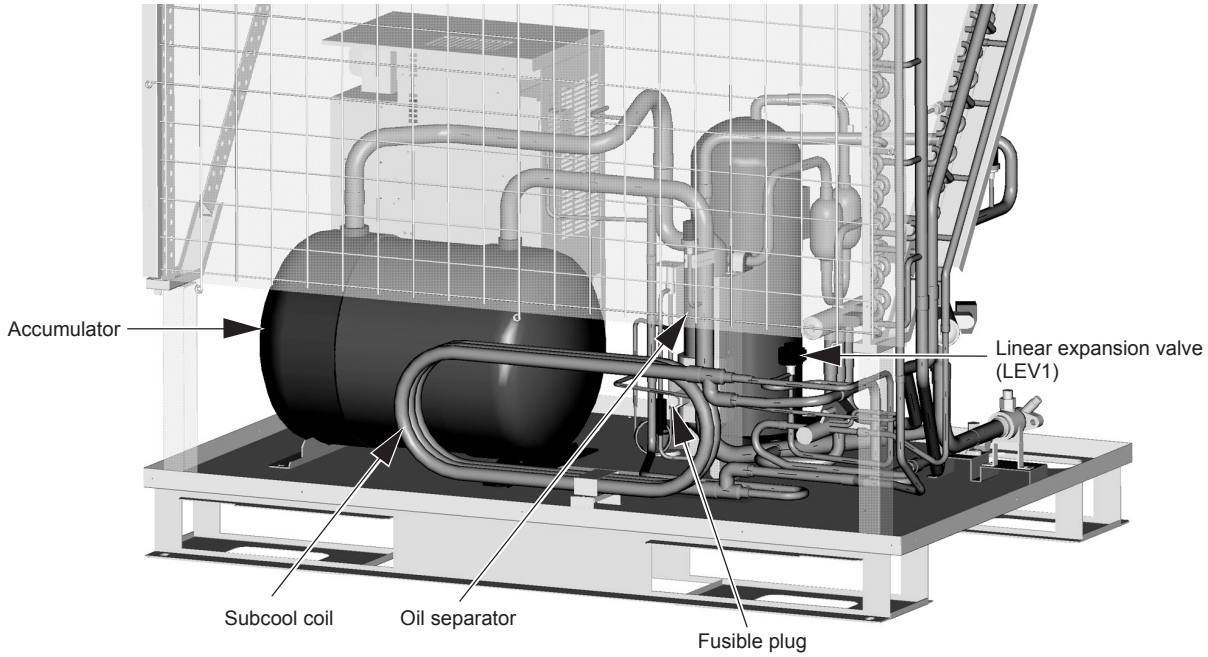

3. PUHY-P168, P192, P204, P216 and P234 models

(1) Appearance

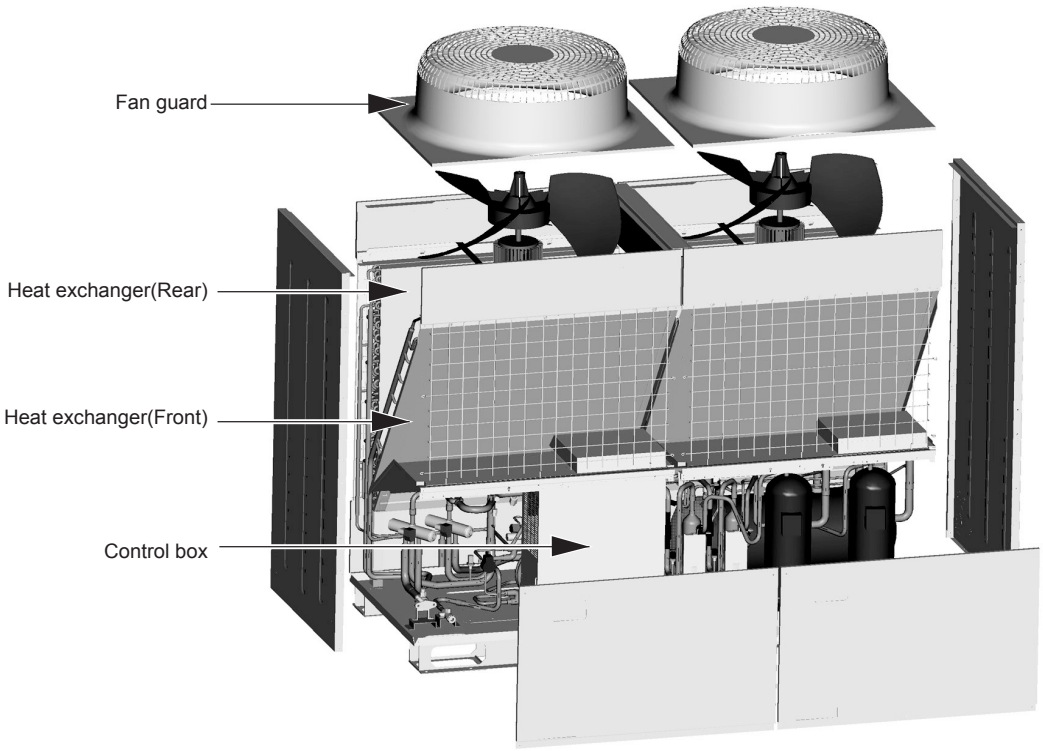

(2) Front view of a refrigerant circuit

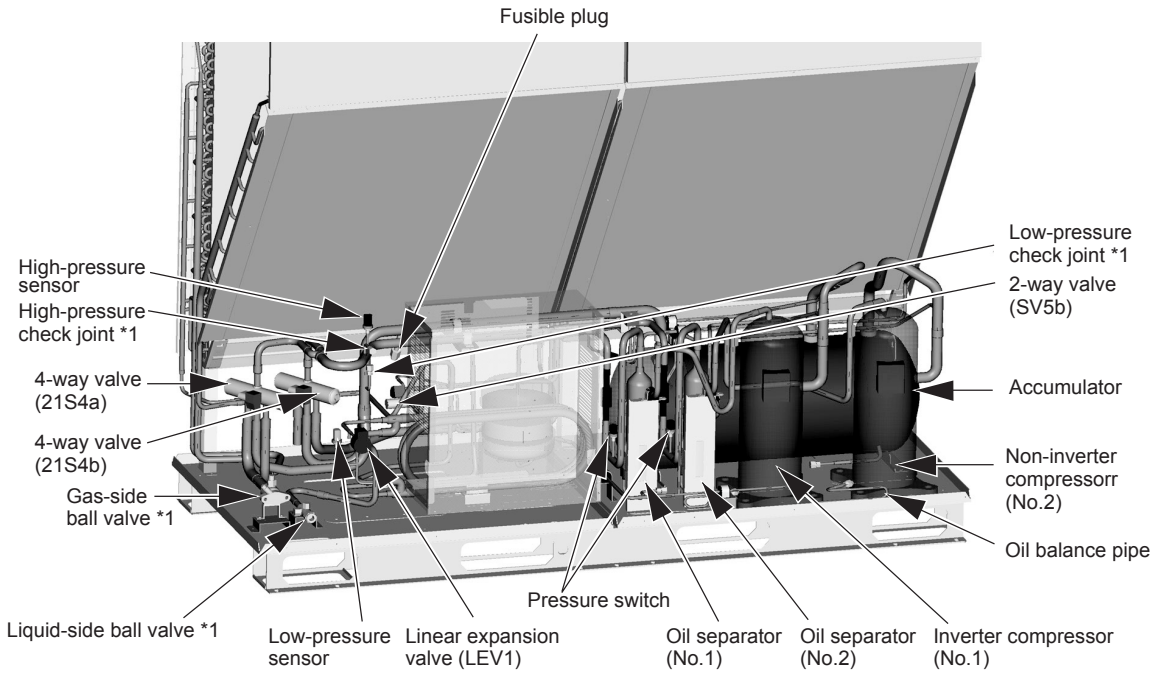

*1 The diameter of this charge plug is 5/16".
Use the adapter that is supplied with the product if using tools designed primarily for use with 1/4"-diameter materials.

(3) Rear view of a refrigerant circuit

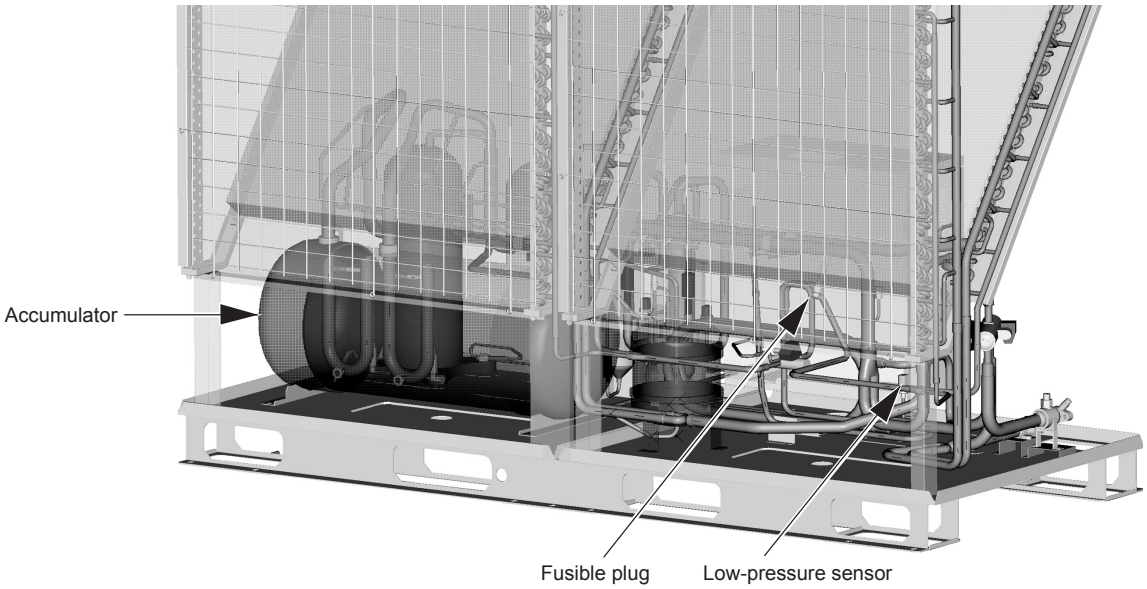

4. PURY-P72, P96 and P108 models

(1) Appearance

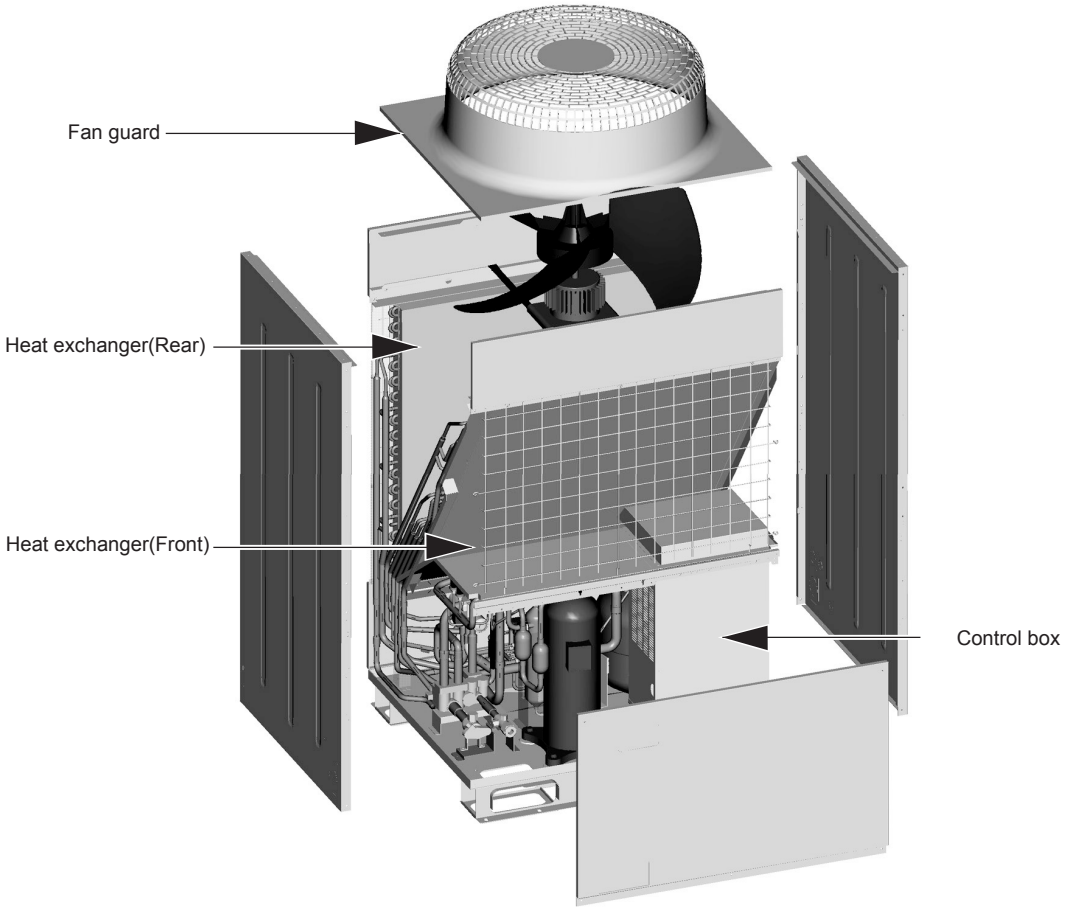

(2) Front view of a refrigerant circuit

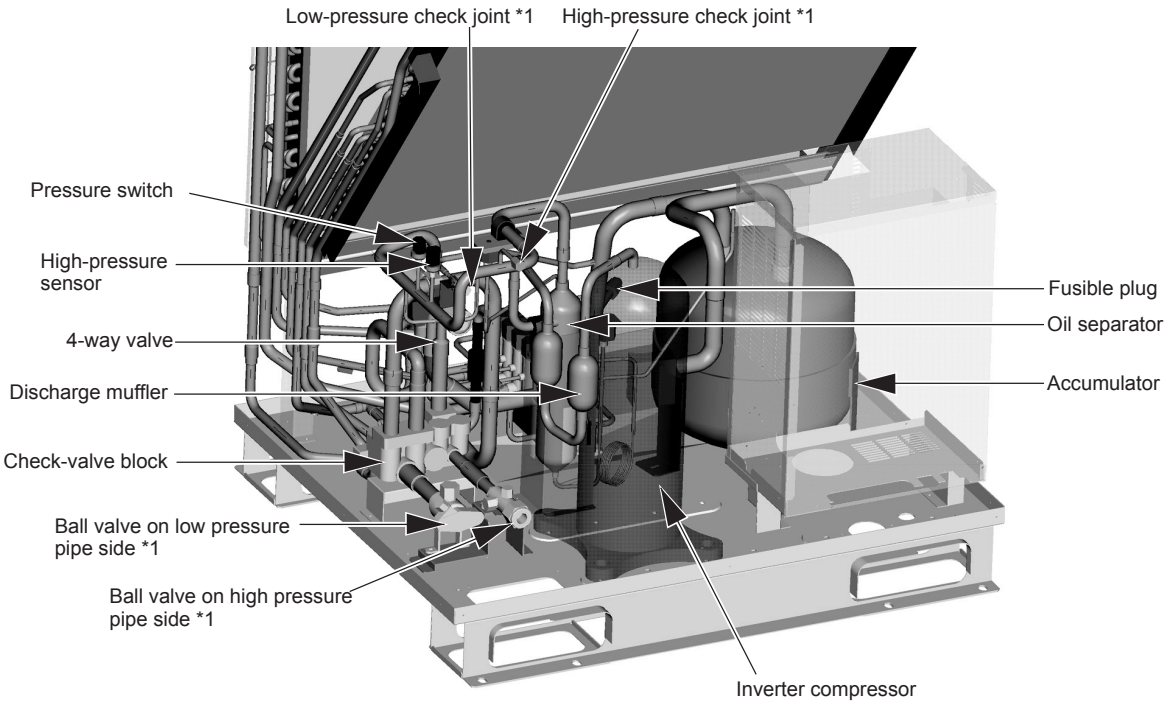

*1 The diameter of this charge plug is 5/16".
Use the adapter that is supplied with the product if using tools designed primarily for use with 1/4"-diameter materials.

(3) Rear view of a refrigerant circuit

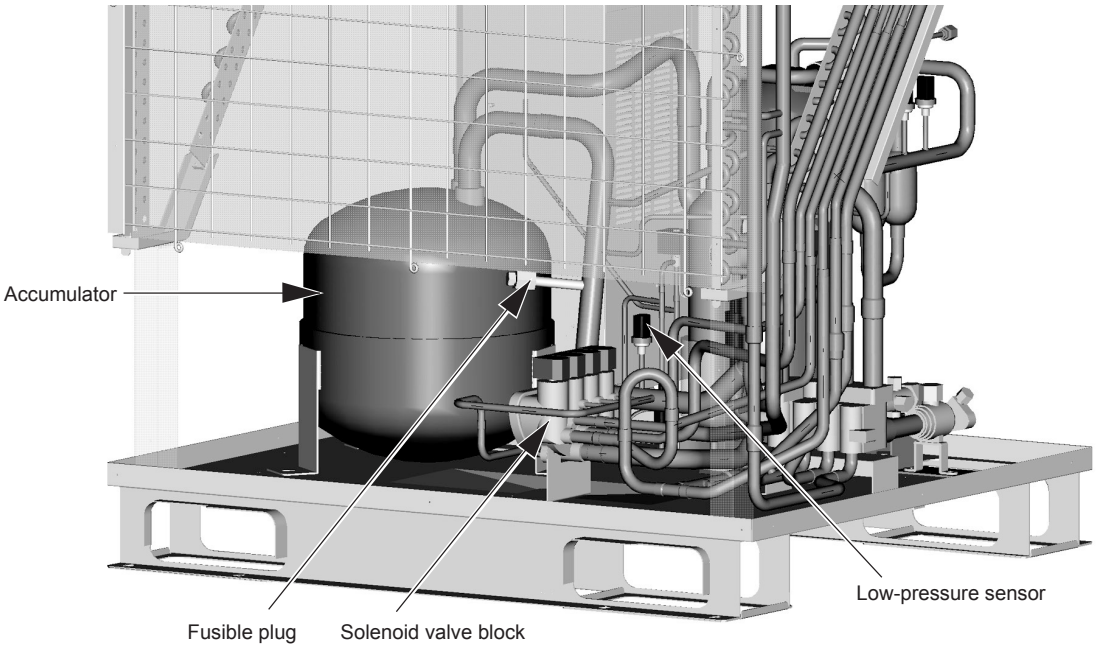

5. PURY-P126 and P144 models

(1) Appearance

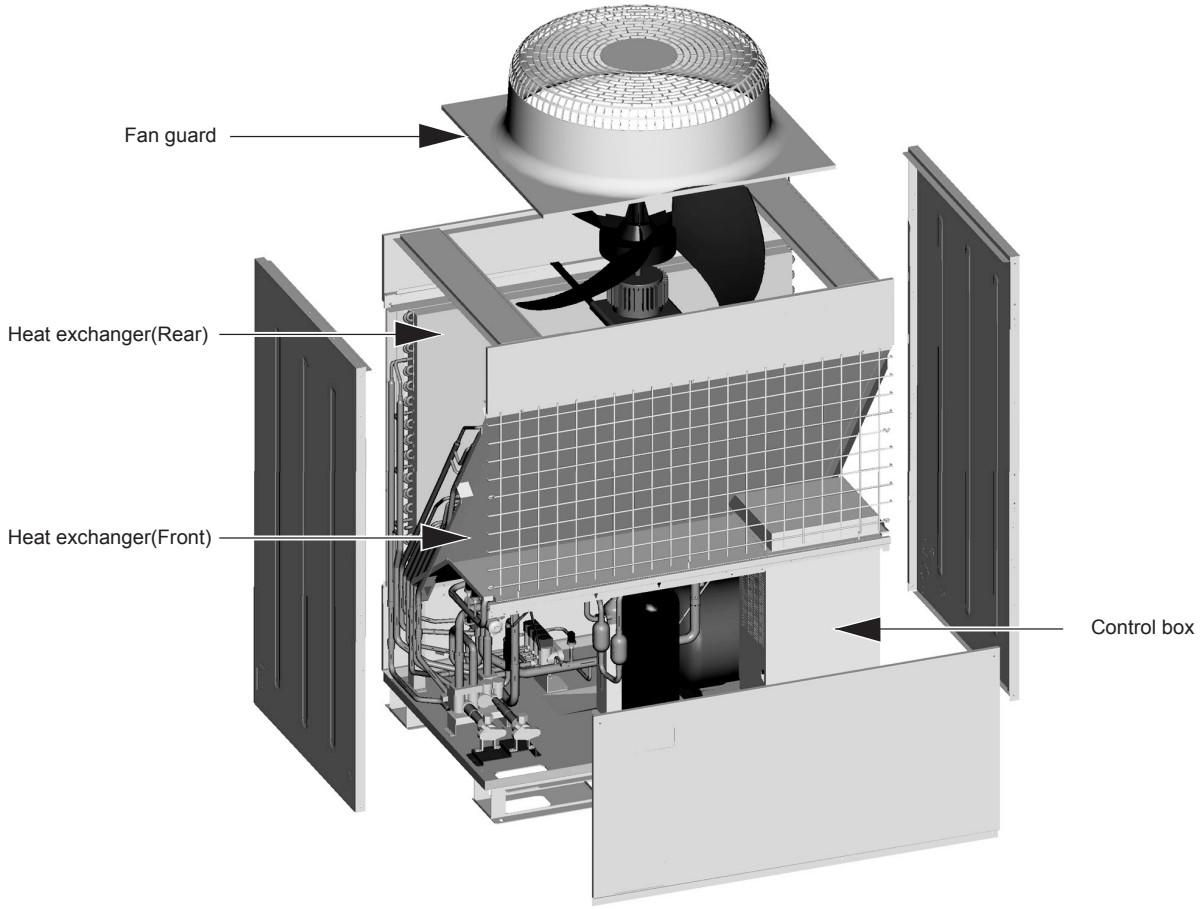

(2) Front view of a refrigerant circuit

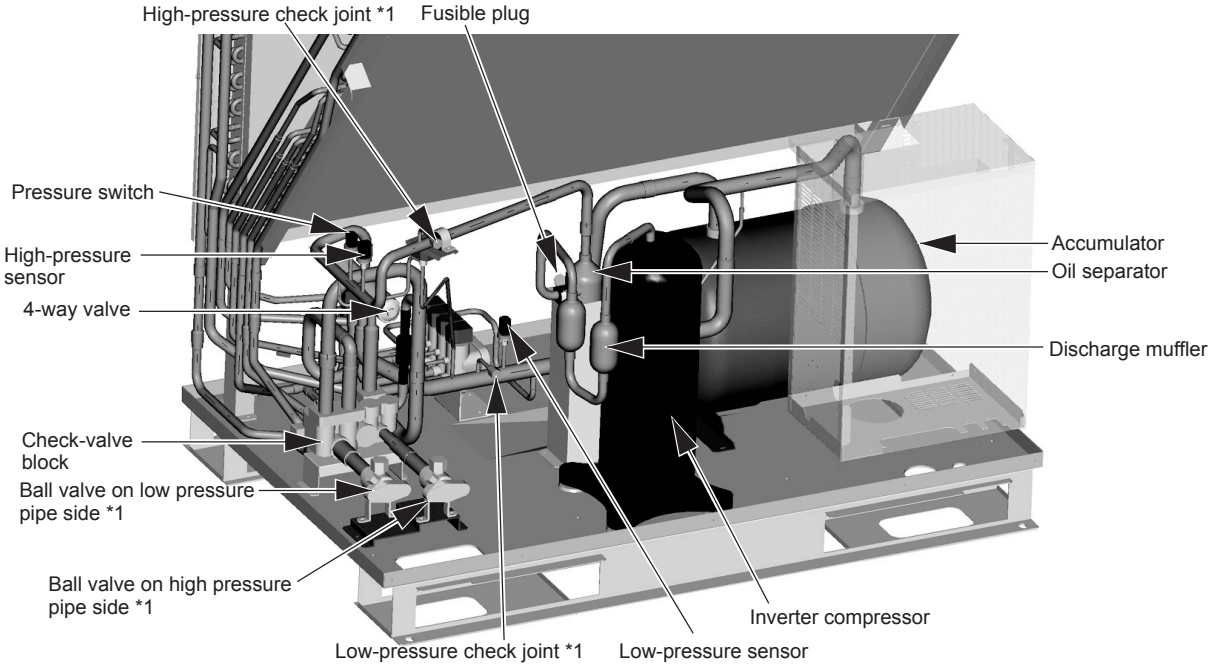

*1 The diameter of this charge plug is 5/16".
Use the adapter that is supplied with the product if using tools designed primarily for use with 1/4"-diameter materials.

(3) Rear view of a refrigerant circuit

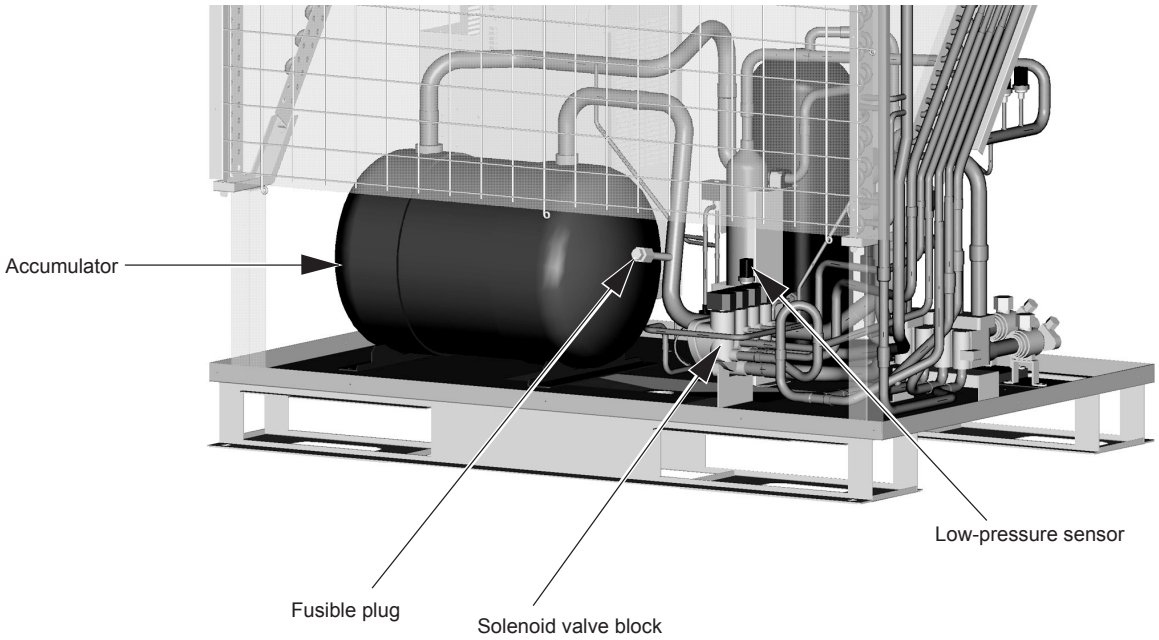

6. PURY-P168, P192, P204, P216 and P234 models

(1) Appearance

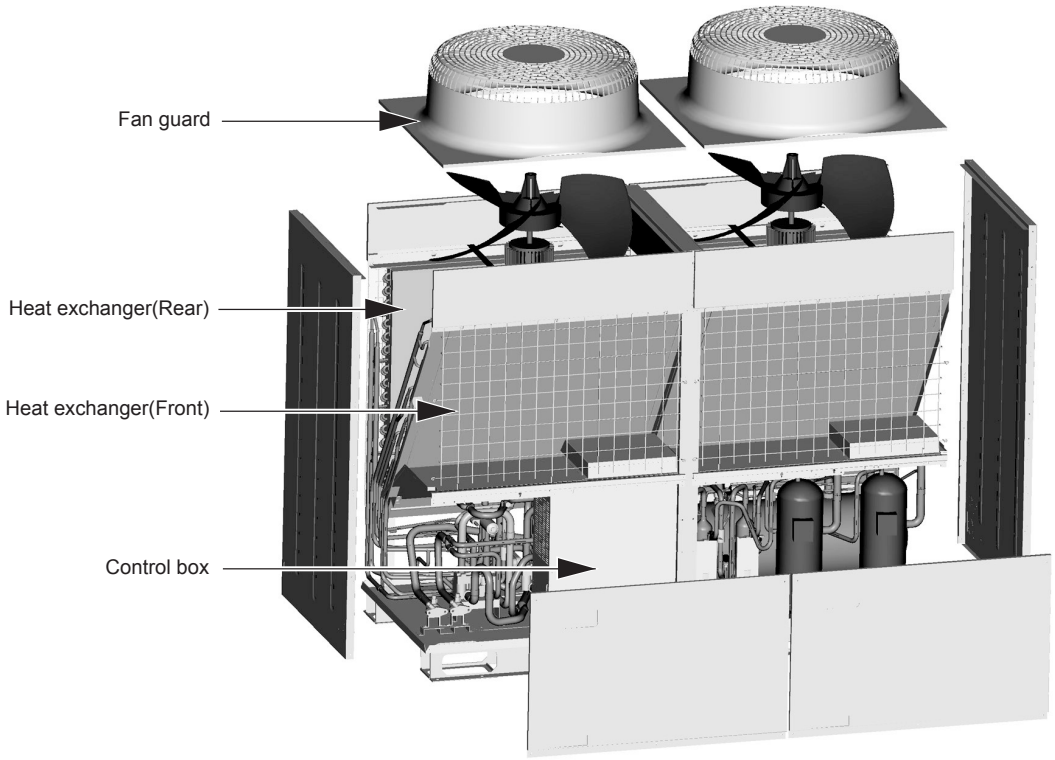

(2) Front view of a refrigerant circuit

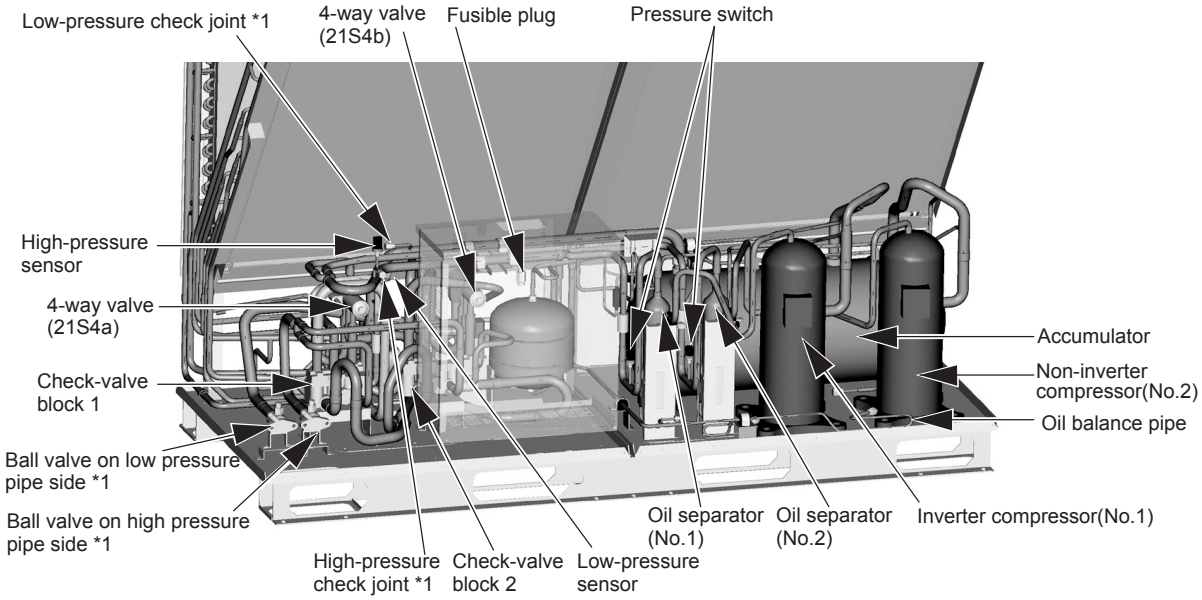

*1 The diameter of this charge plug is 5/16".
Use the adapter that is supplied with the product if using tools designed primarily for use with 1/4"-diameter materials.

(3) Rear view of a refrigerant circuit

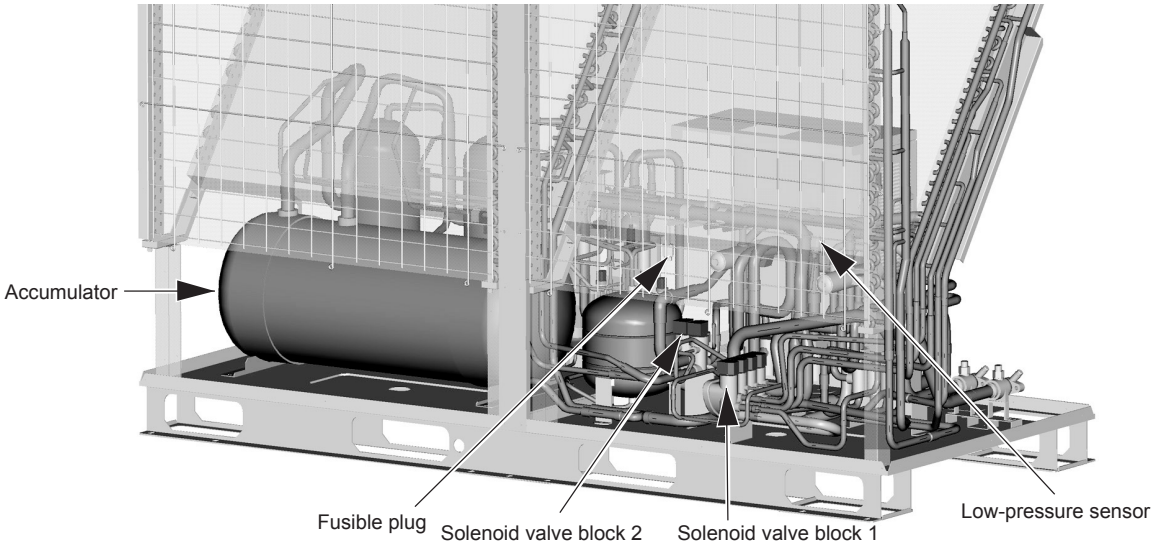

[2] Control Box of the Outdoor Unit

1. PUHY/PURY-P72, P96, P108, P126 and P144 models

(1) Under the circuit board cover

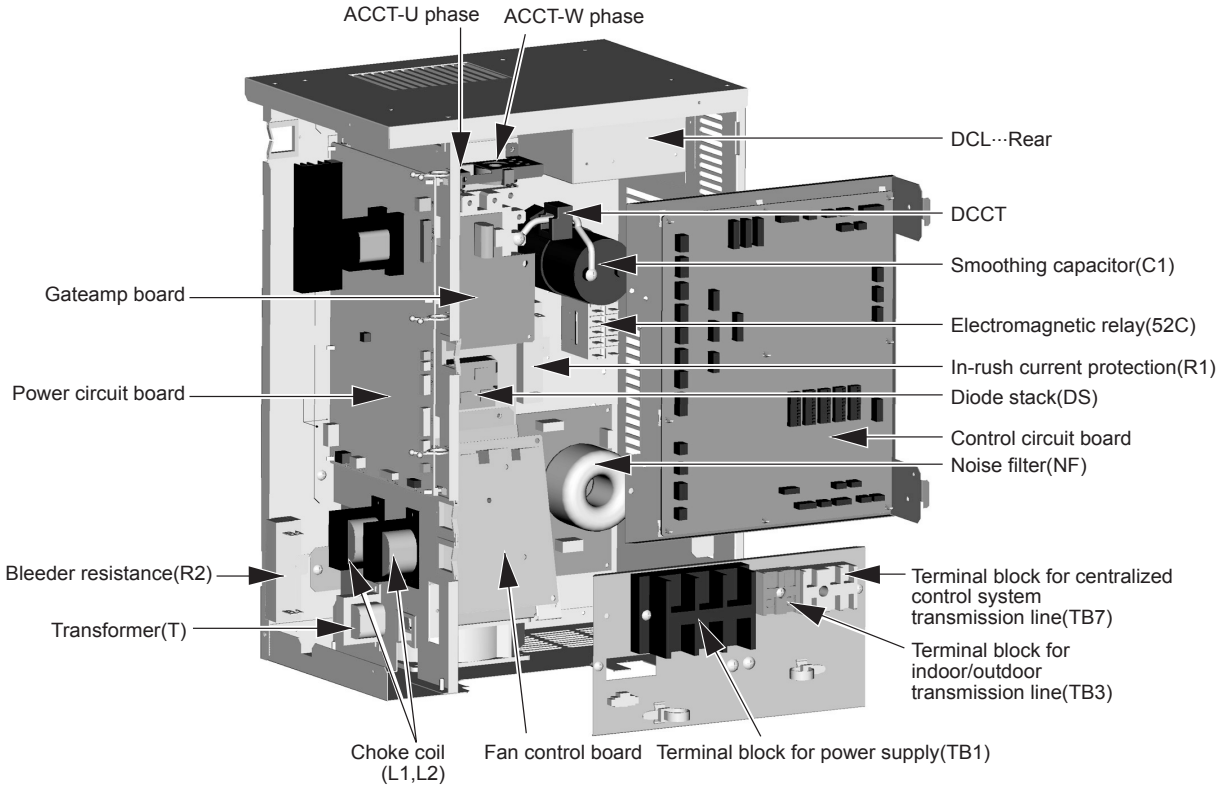

2. PUHY/PURY-P168, P192, P204, P216 and P234 models

(1) Under the circuit board cover (right side)

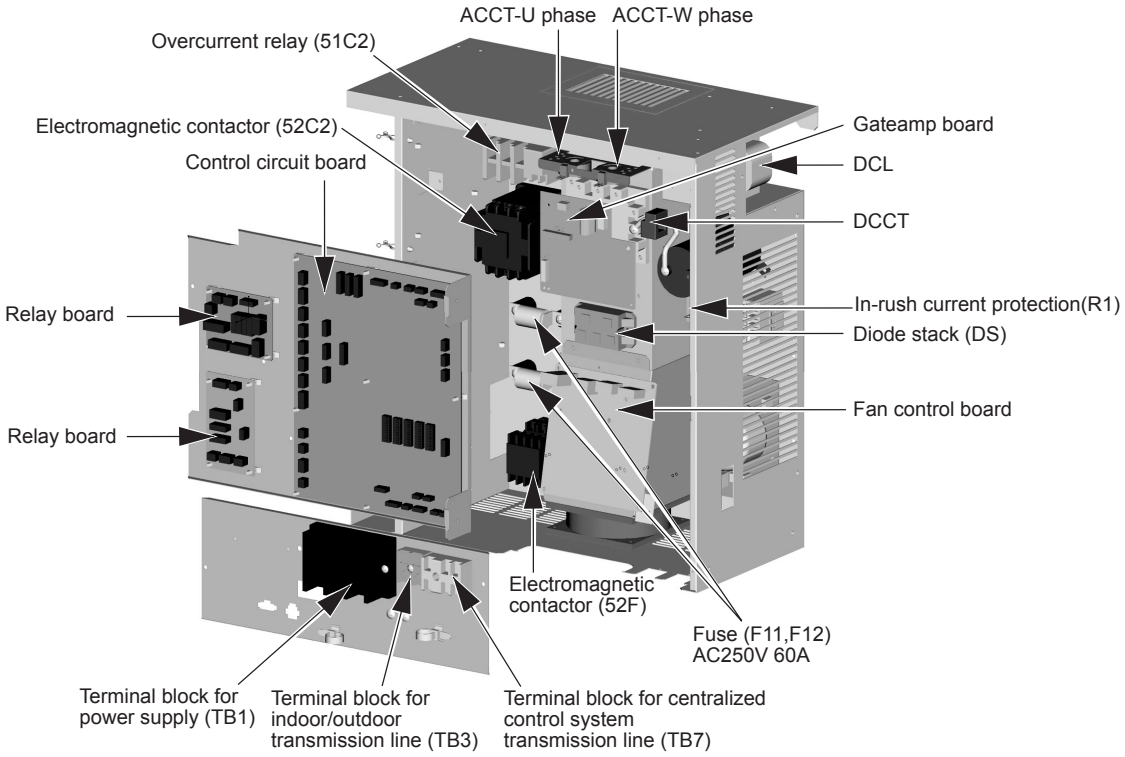

(2) Under the circuit board cover (left side)

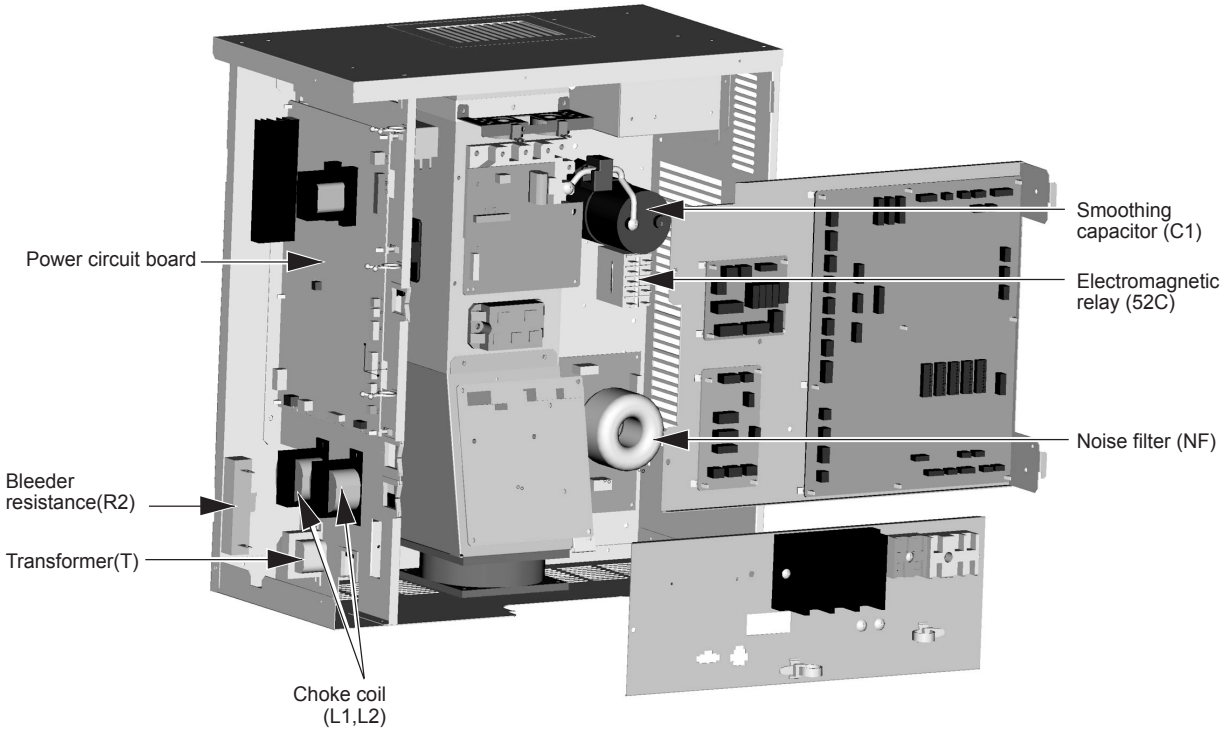

[3] Outdoor Unit Circuit Board

1. Outdoor MAIN board

(1) PUHY/PURY

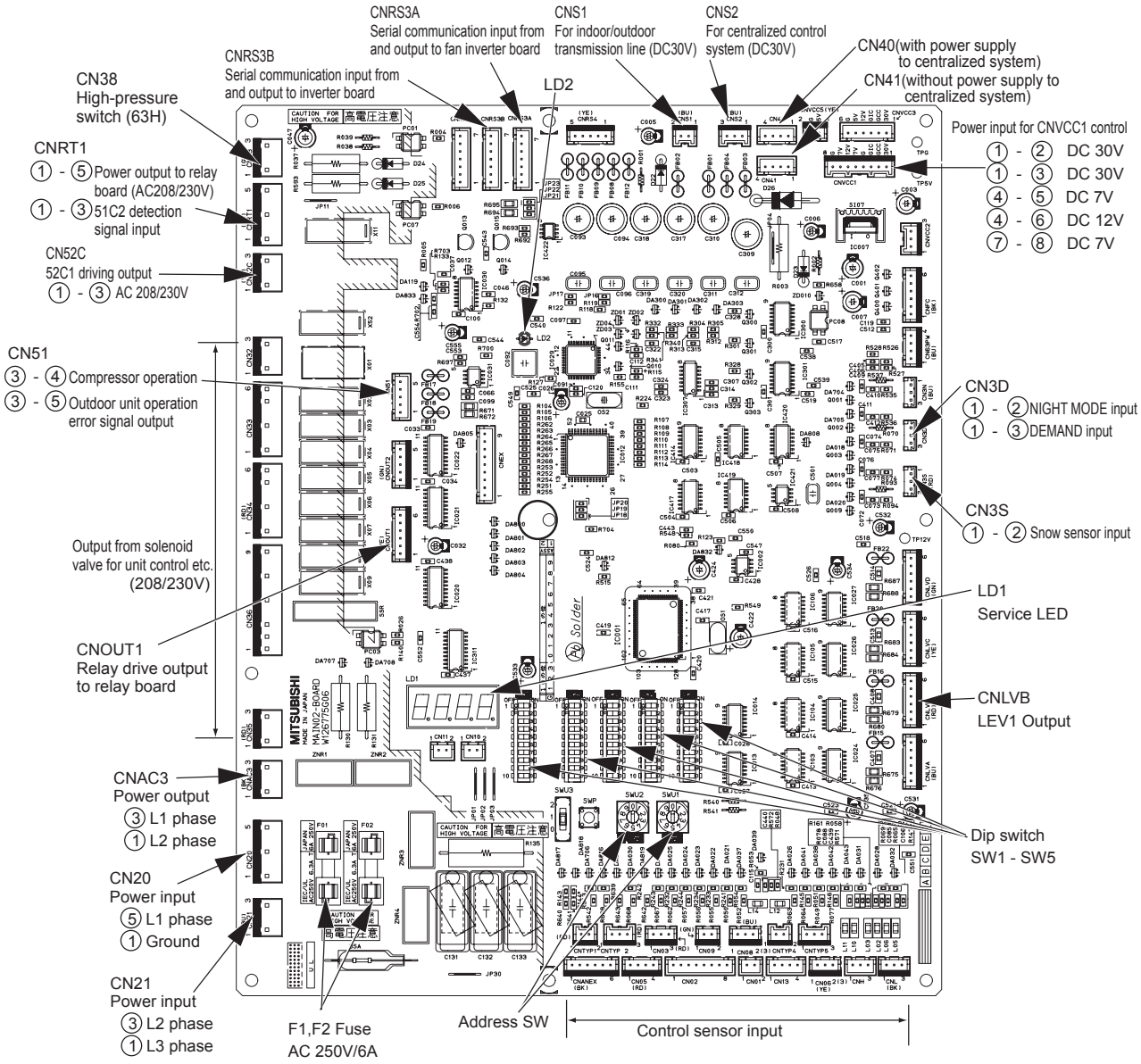

2. Outdoor unit inverter board

(1) PUHY/PURY

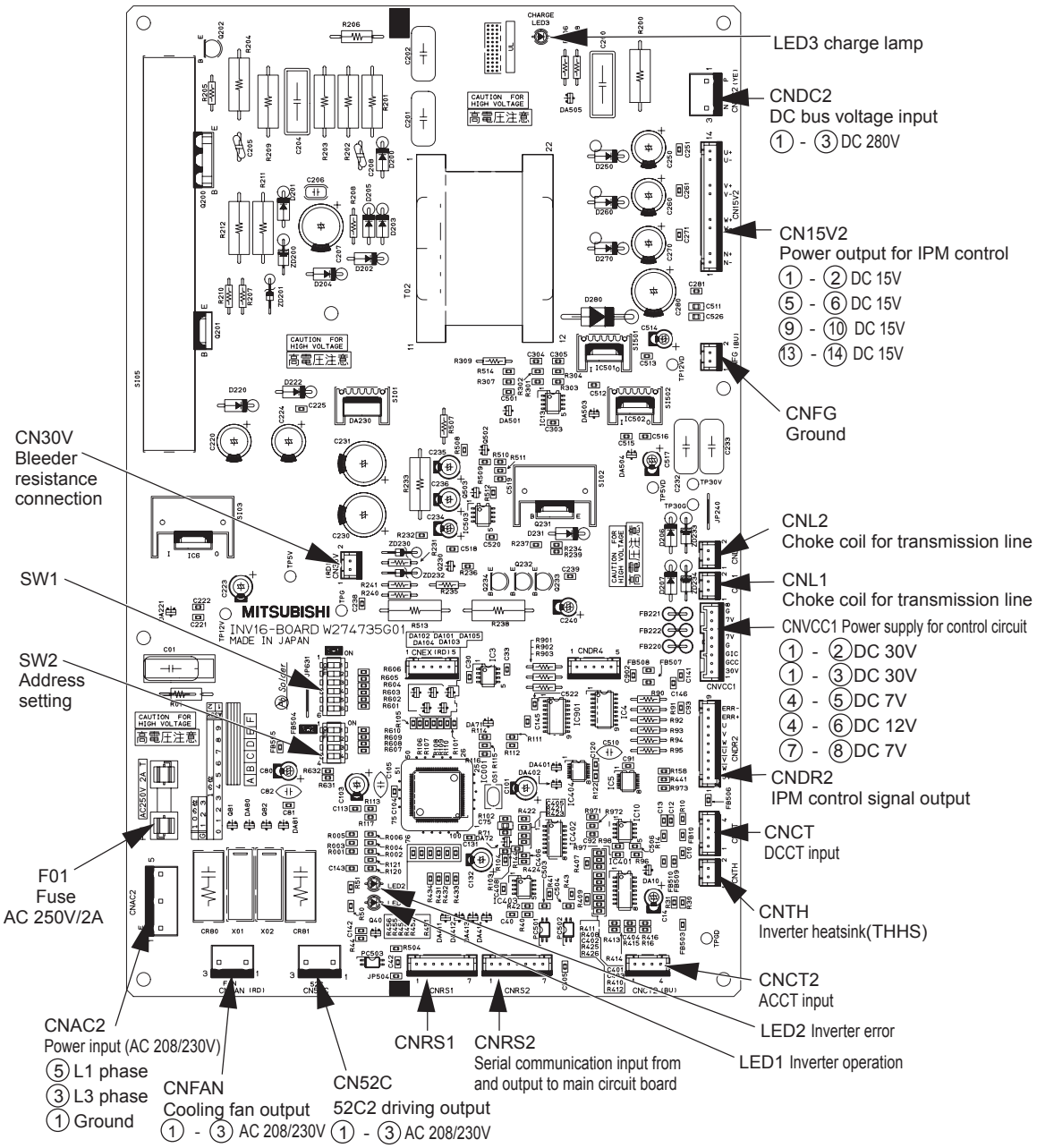

3. Outdoor unit fan inverter board

(1) PUHY/PURY

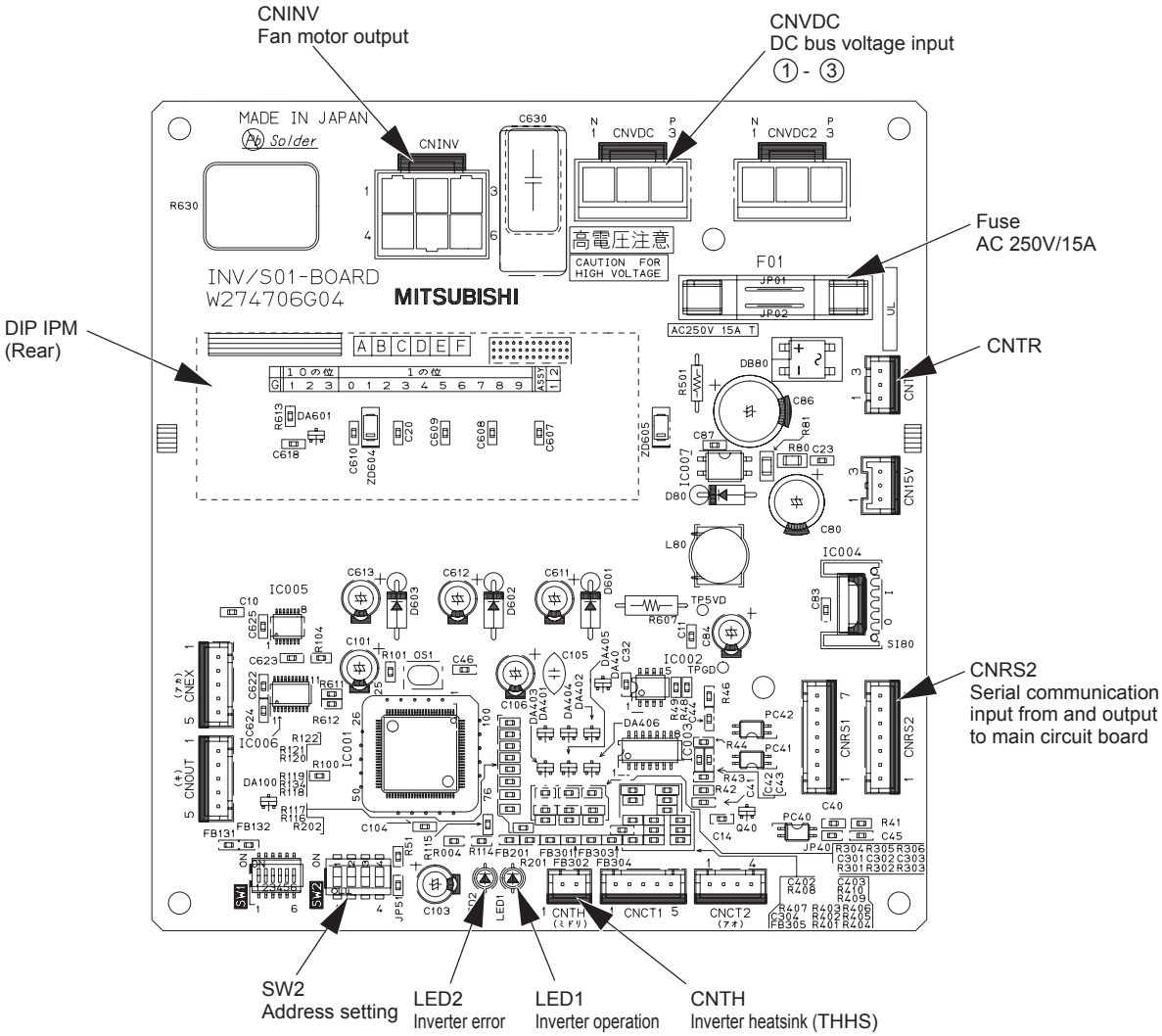

4. RELAY BOARD (RELAY BOARD)

(1) PUHY/PURY

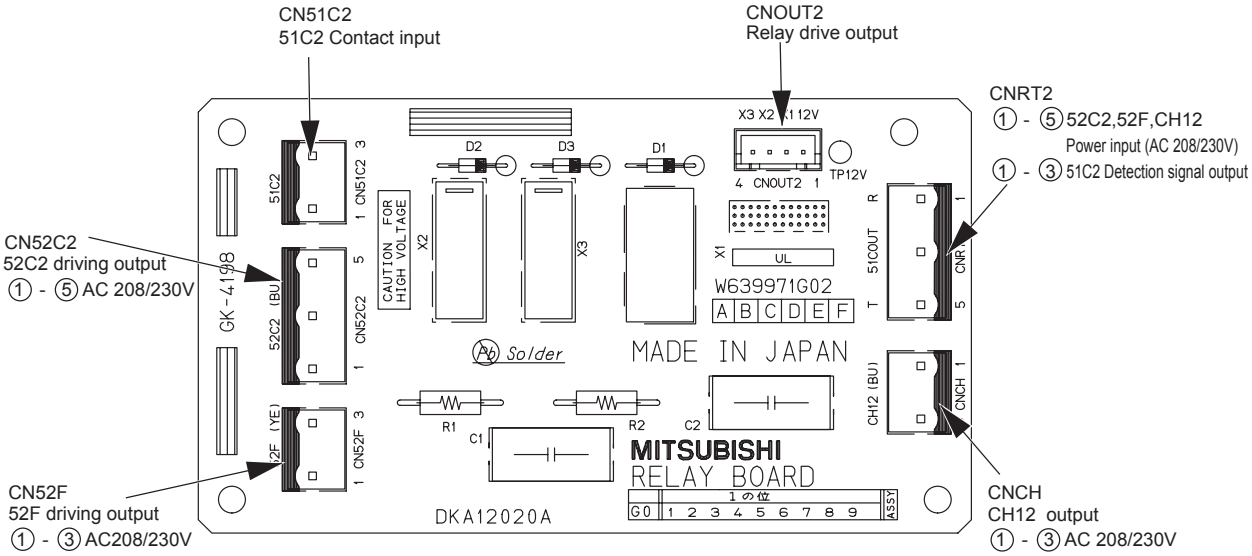

5. RELAY BOARD (RELAY02- BOARD)

(1) CMB

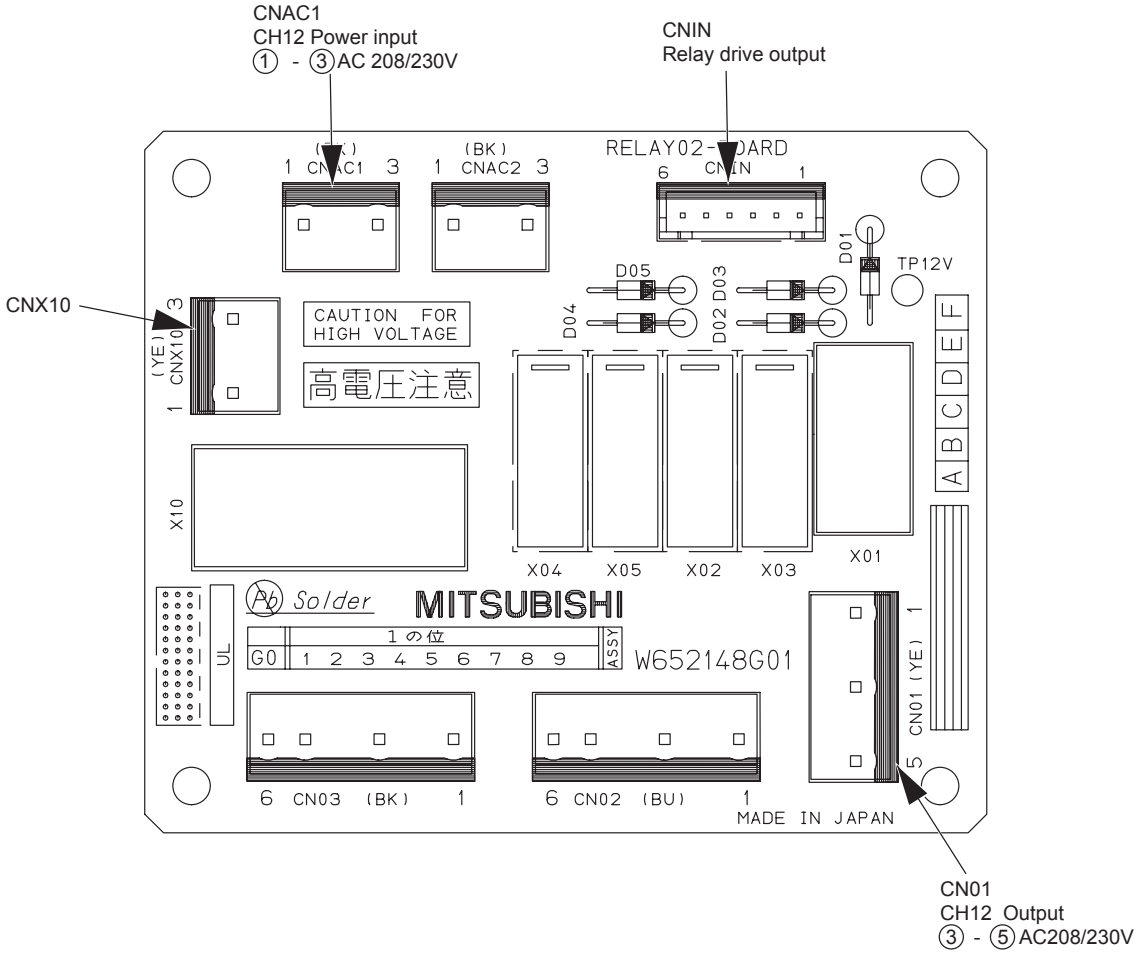

[4] BC Controller (Under the panel)

1. CMB-P○○NU-G (A)

(1) Front

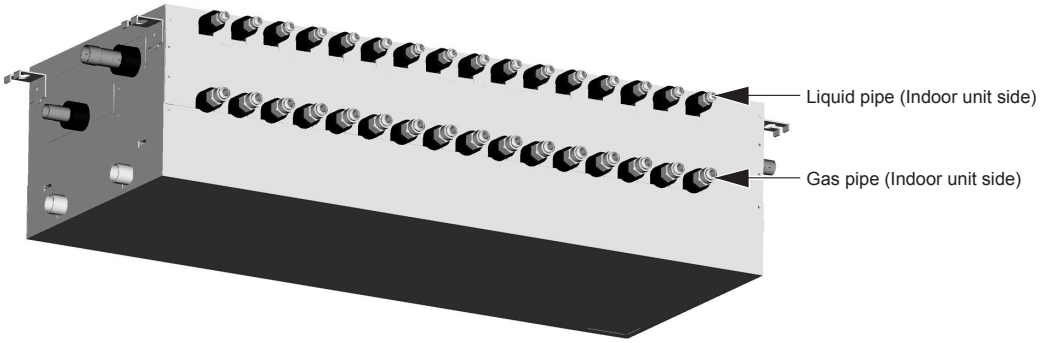

(2) Rear view <GA type>

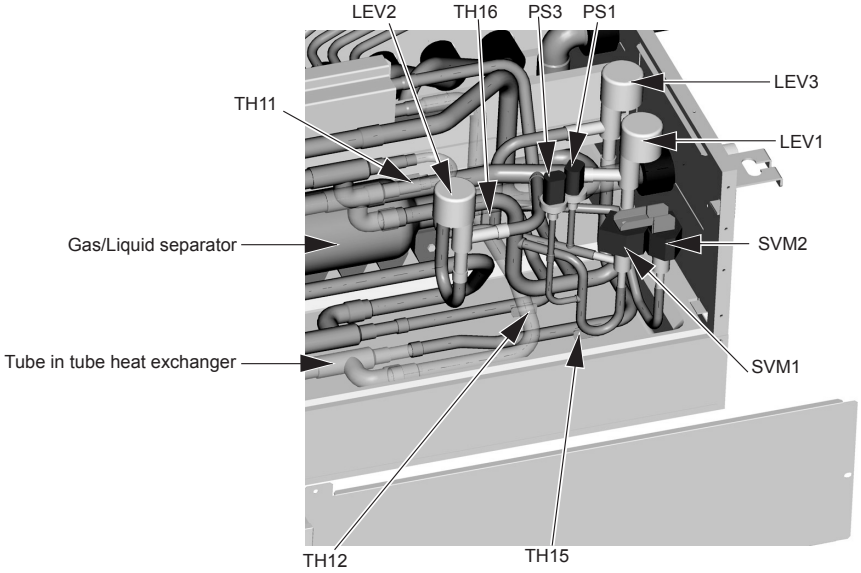

(3) Rear view <G type>

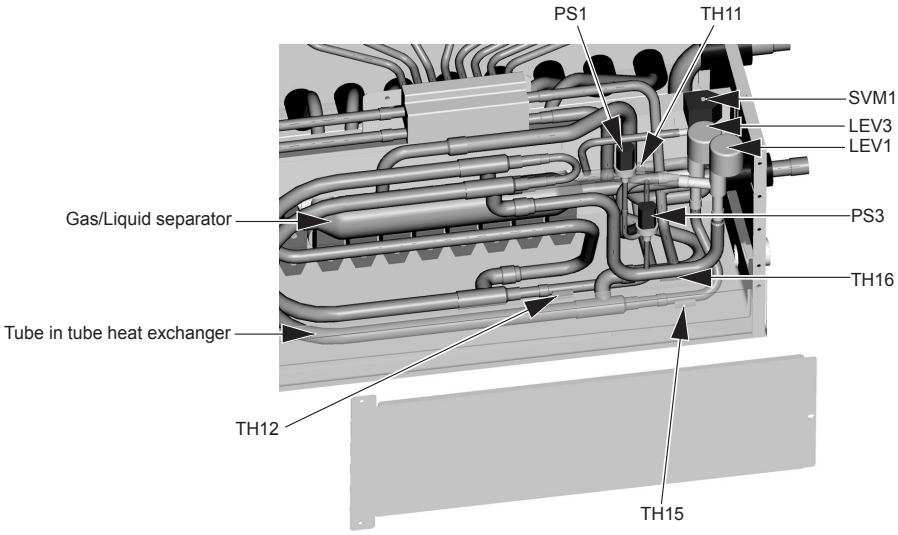

2. CMB-P○○NU-GB

(1) Front

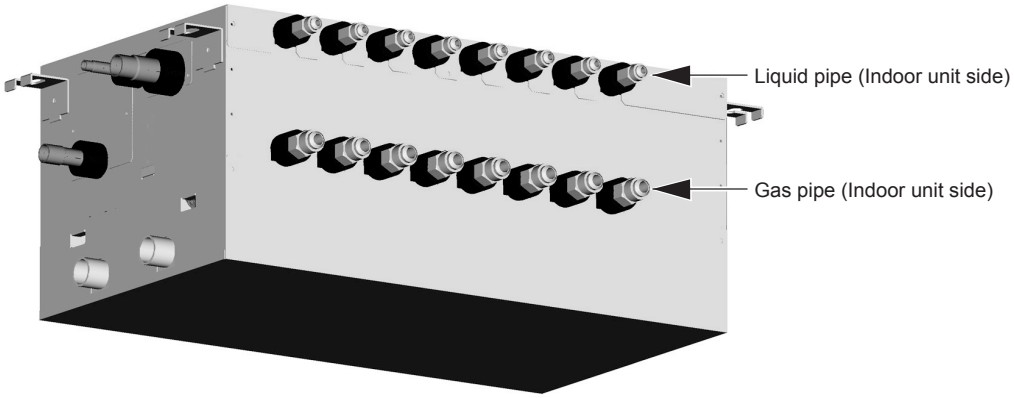

(2) Rear view

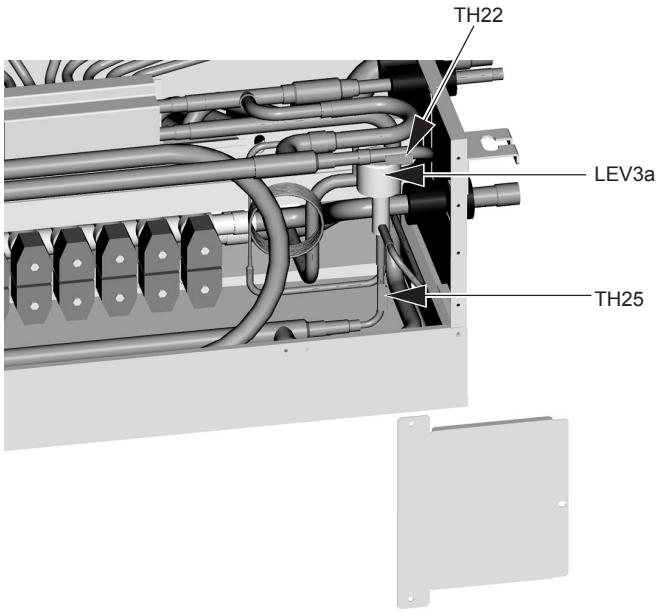

[5] Control Box of the BC Controller

1. CMB-P1016NU-GA

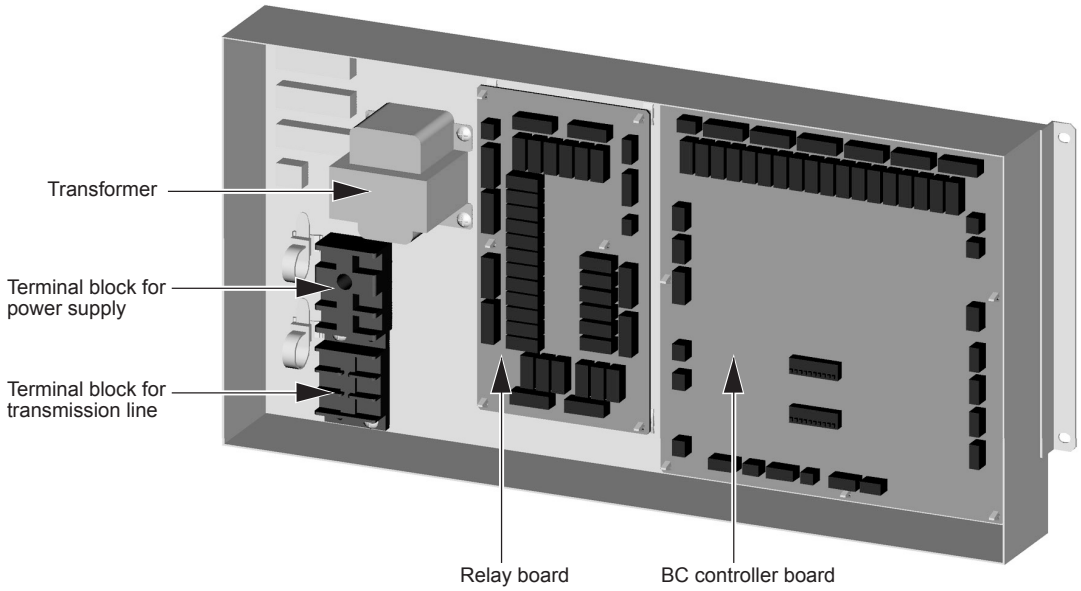

[6] BC Controller Circuit Board

1. BC controller circuit board (BC board)

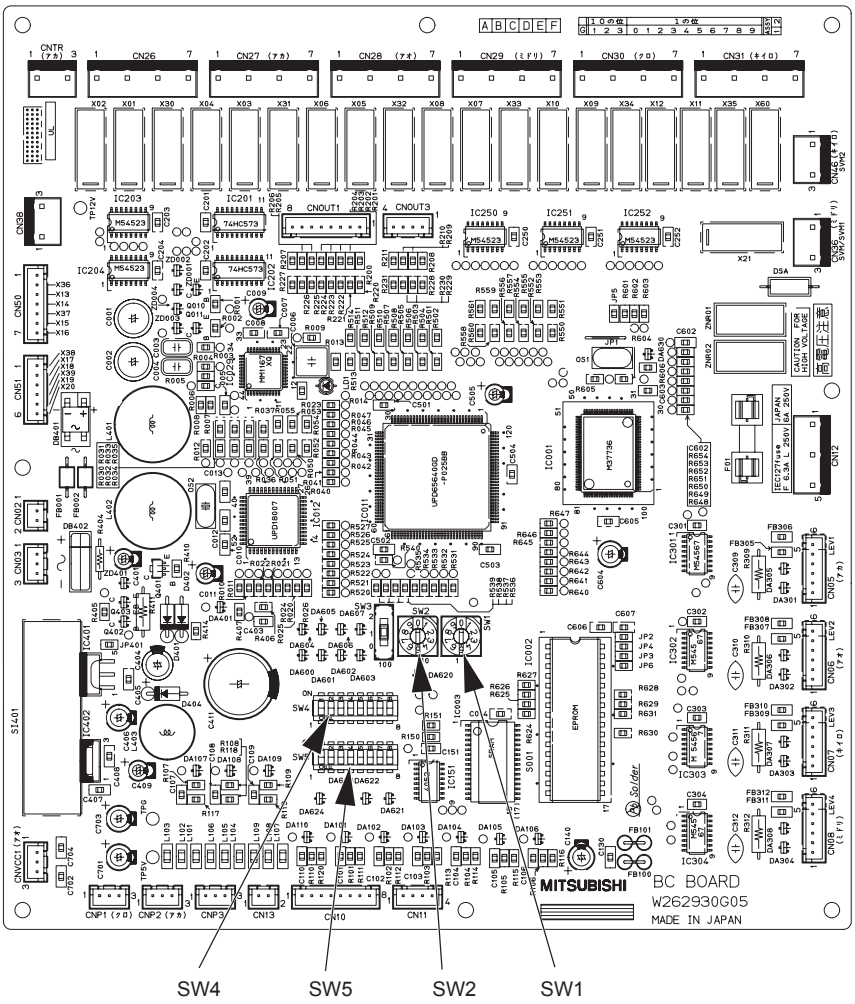

2. RELAY BOARD (RELAY 4 board)

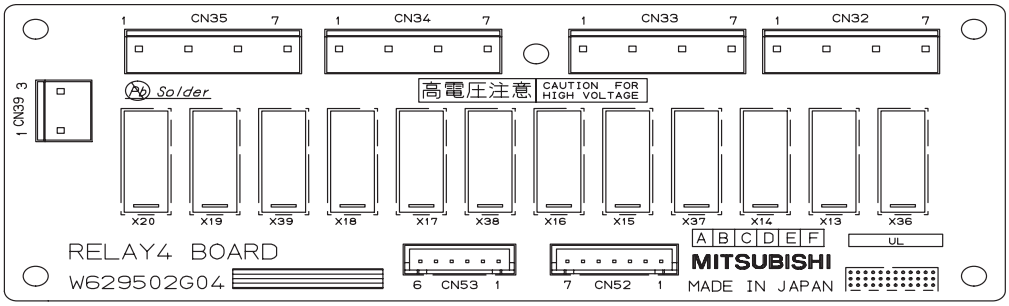

3. RELAY BOARD (RELAY 10 board)

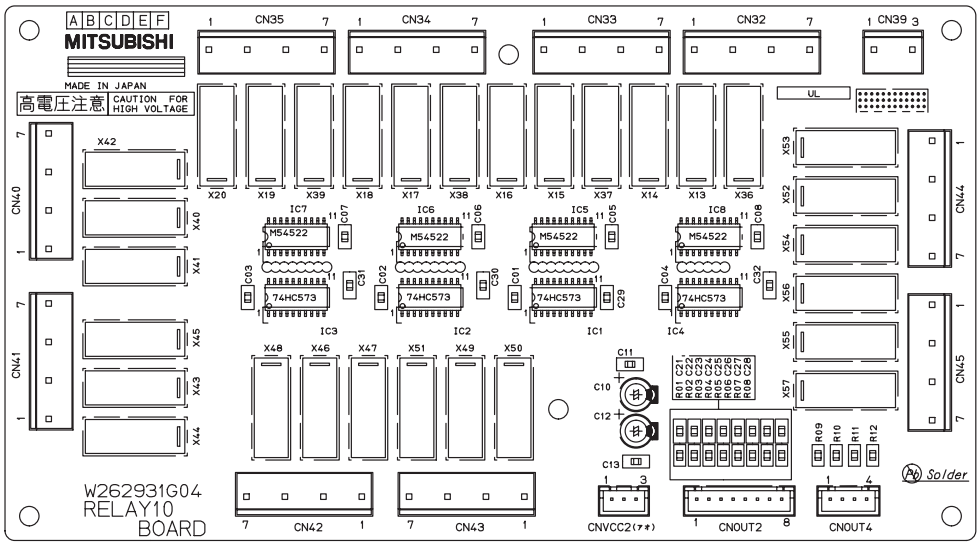

Ⅳ Remote Controller

[1] Functions and Specifications of MA and ME Remote Controllers 93
[2] Group Settings and Interlock Settings via the ME Remote Controller 94
[3] Interlock Settings via the MA Remote Controller 98
[4] Using the built-in Temperature Sensor on the Remote Controller 101

[1] Functions and Specifications of MA and ME Remote Controllers

There are two types of remote controllers: M-NET (ME) remote controller, which is connected on the indoor-outdoor transmission line, and MA remote controller, which is connected to each indoor unit.

1. Comparison of functions and specifications between MA and ME remote controllers

Functions/specifications	MA remote controller*1*2	M-NET (ME) remote controller*2*3
Remote controller address settings	Not required	Required
Indoor/outdoor unit address settings	Not required (required only by a system with one outdoor unit)*4	Required
Wiring method	Non-polarized 2-core cable ∗To perform a group operation, daisy-chain the indoor units using non-polarized 2-core cables.	Non-polarized 2-core cable
Remote controller connection	Connectable to any indoor unit in the group	Connectable anywhere on the indoor-outdoor transmission line
Interlock with the ventilation unit	Each indoor unit can individually be interlocked with a ventilation unit. (Set up via remote controller in the group.)	Each indoor unit can individually be interlocked with a ventilation unit. (Set up via remote controller.)
Changes to be made upon grouping change	MA remote controller wiring between indoor units requires rewiring.	Either the indoor unit address and remote controller address must both be changed, or the registration information must be changed via MELANS.

*1. MA remote controller refers to MA remote controller, MA simple remote controller, and wireless remote controller.

*2. Either the MA remote controller or the M-NET remote controller can be connected when a group operation of units in a system with multiple outdoor units is conducted or when a system controller is connected.

*3. M-NET remote controller refers to ME remote controller.

*4. Depending on the system configuration, some systems with one outdoor unit may require address settings.

2. Remote controller selection criteria

MA remote controller and M-NET remote controller have different functions and characteristics. Choose the one that better suits the requirements of a given system. Use the following criteria as a reference.

MA remote controller*1*2	M-NET (ME) remote controller*1*2
♦There is little likelihood of system expansion and grouping changes. ♦Grouping (floor plan) has been set at the time of installation.	♦There is a likelihood of centralized installation of remote controllers, system expansion, and grouping changes. ♦Grouping (floor plan) has not been set at the time of installation. ♦To connect the remote controller directly to the OA processing unit.

*1. M-NET remote controller and MA remote controller cannot both be connected to the same group of indoor units.

*2. A system controller must be connected to a system to which both MA remote controller and M-NET remote controller are connected.

<System with MA remote controller>

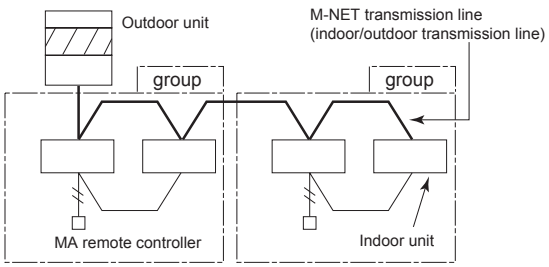

<System with M-NET remote controllers>

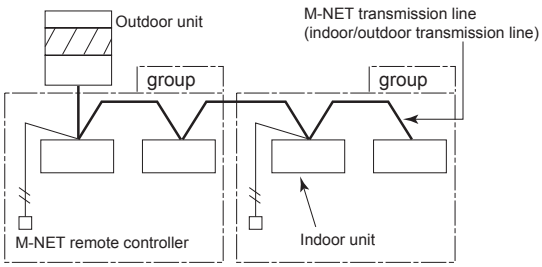

[2] Group Settings and Interlock Settings via the ME Remote Controller

1. Group settings/interlock settings

Make the following settings to perform a group operation of units that are connected to different outdoor units or to manually set up the indoor/outdoor unit address.

(A) Group settings.....Registration of the indoor units to be controlled with the remote controller, and search and deletion of registered information.

(B) Interlock settings.....Registration of LOSSNAY units to be interlocked with the indoor units, and search and deletion of registered information

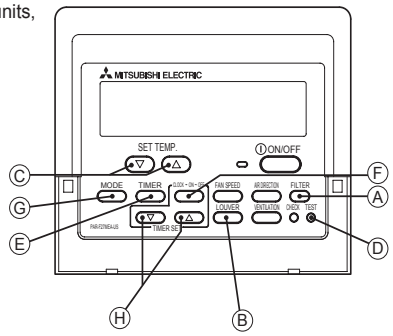

[Operation Procedures]

(1) Address settings

Register the indoor unit to be controlled with the remote controller.

①Bring up either one of the following displays on the remote controller:

The blinking display of "HO," which appears when the power is turned on, or the normal display, which appears when the unit is stopped. The display window must look like one of the two figures below to proceed to the next step.

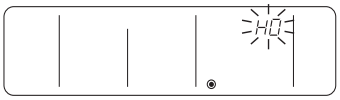

[Blinking display of "HO"]

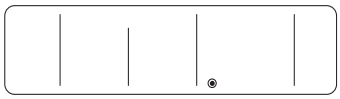

[Normal display]

(A) Group Settings

②Bring up the "Group Setting" window.

-Press and hold buttons Ⓐ[FILTER] and Ⓑ[Louver] simultaneously for 2 seconds to bring up the display as shown below.

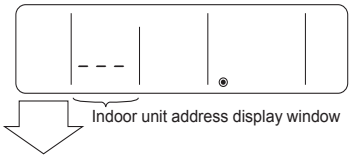

③Select the unit address.

- Select the address of the indoor unit to be registered by pressing button Ⓒ[SET TEMP. (▽) or (△)] to advance or go back through the addresses.

④Register the indoor unit whose address appears on the display.

- Press button Ⓓ [TEST] to register the indoor unit address whose address appears on the display.
- If registration is successfully completed, unit type will appear on the display as shown in the figure below.
- If the selected address does not have a corresponding indoor unit, an error message will appear on the display. Check the address, and try again.

<Successful completion of registration>

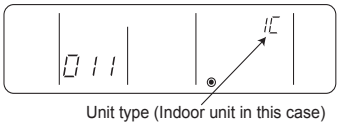

Unit type (Indoor unit in this case)

<Deletion error>

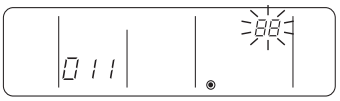

"88" blinks to indicate a registration error. (Indicates that selected address does not have a corresponding unit.)

⑤To register the addresses for multiple indoor units, repeat steps ③ and ④ above.

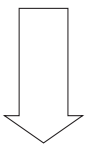

To search for an address, go to section (2) "Address Search."

(B) Interlock Settings

⑥Bring up the "Interlock Setting" window.

-Press button Ⓖ[MODE] to bring up the following display. Press again to go back to the "Group Setting" window as shown under step ②.

Both the "indoor unit address" and "interlocked unit address" will be displayed together.

Indoor unit address display window

Interlocked unit address display window

To search for an address, go to section (2) "Address Search."

⑦Bring up the address of the indoor unit and the address of the LOSSNAY to be interlocked on the display.

- Select the address of the indoor unit to be registered by pressing button Ⓒ [SET TEMP. (▽) or (△)] to advance or go back through the addresses.
- Select the address of the LOSSNAY unit to be interlocked by pressing button Ⓗ[TIMER SET (▽) or (△)] to advance or go back through the "interlocked unit addresses."

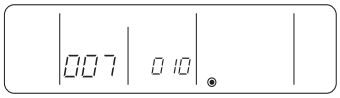

⑧Make the settings to interlock LOSSNAY units with indoor units.

- Press button Ⓓ [TEST] while both the indoor unit address and the address of the LOSSNAY units to be interlocked are displayed to enter the interlock setting.
- Interlock setting can also be made by bringing up the LOSSNAY address in the indoor unit address display window and the indoor unit address in the interlocked unit address display window.

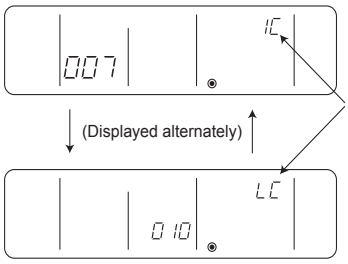

If registration is successfully completed, the two displays as shown on the left will appear alternately.
If the registration fails, "88" will blink on the display.
(Indicates that the selected address does not have a corresponding unit.)

NOTE : Interlock all the indoor units in the group with the LOSSNAY units; otherwise, the LOSSNAY units will not operate.

(C) To return to the normal display

When all the group settings and interlock settings are made, take the following step to go back to the normal display.

⑩ **Press and hold buttons Ⓐ [FILTER] and Ⓑ [Louver] simultaneously for 2 seconds to go back to the window as shown in step ①.**

⑨ **Repeat steps ⑦ and ⑧ in the previous page to interlock all the indoor units in a group with the LOSSNAY unit.**

To go back to the normal display, follow step ⑩ .

To search for an address, go to section (2) "Address Search."

(2) Address search

To search for the address of indoor units that have been entered into the remote controller, follow steps ① and ②.

(A) To search group settings

⑪ **Bring up the "Group Setting" window.**

- Each pressing of button Ⓔ [TIMER] will bring up the address of a registered indoor unit and its unit type on the display.

<Entry found>

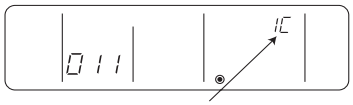

Unit type
(Indoor unit in this case)

<No entries found>

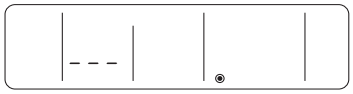

- When only one unit address is registered, the same address will remain on the display regardless of how many times the button is pressed.
- When the address of multiple units are registered (i.e."011,""012,""013"), they will be displayed one at a time in an ascending order with each pressing of button Ⓔ [TIMER] .

To delete an address, go to section (3)"Address Deletion."

(B) Interlock setting search

After performing step ⑥, proceed as follows:

⑫ **Bring up the address of the indoor unit to be searched on the display.**

- Select the address of the indoor unit to be searched by pressing button Ⓗ [TIMER SET (▽) or (△)] to advance or go back through the interlocked addresses.

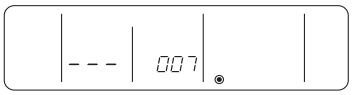

LOSSNAY can be searched in the same manner by bringing up the LOSSNAY address in the Interlocked unit address display window.

⑬ **Bring up on the display the address of the LOSSNAY unit that was interlocked with the indoor unit in step ⑫.**

- With each pressing of button Ⓔ [TIMER], the address of the LOSSNAY and indoor unit that is interlocked with it will be displayed alternately.

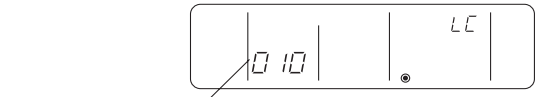

Address of an interlocked LOSSNAY unit

(Displayed alternately)

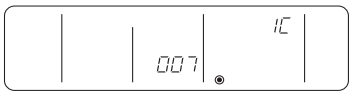

⑭ **Bring up the address of another registered unit on the display.**

- After completing step ⑬, a subsequent pressing of button Ⓔ [TIMER] will bring up the address of another registered unit.
(The display method is the same as the one in step ⑬.)

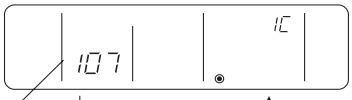

Address of another interlocked unit

(Displayed alternately)

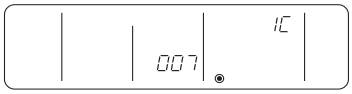

To delete an address, go to section (3)"Address Deletion."

To go back to the normal display, follow step ⑩ .

(3) Address deletion

The addresses of the indoor units that have been entered into the remote controller can be deleted by deleting the group settings.
The interlock settings between units can be deleted by deleting the interlock settings.
Follow the steps in section (2)"Address Search" to find the address to be deleted and perform deletion with the address being displayed in the display window. To delete an address, the address must first be bought up on the display.

⑮ **Delete the registered indoor unit address or the interlock setting between units.**

- Press button Ⓕ [CLOCK→ON→OFF] twice while either the indoor unit address or the address of the interlocked unit is displayed on the display to delete the interlock setting.

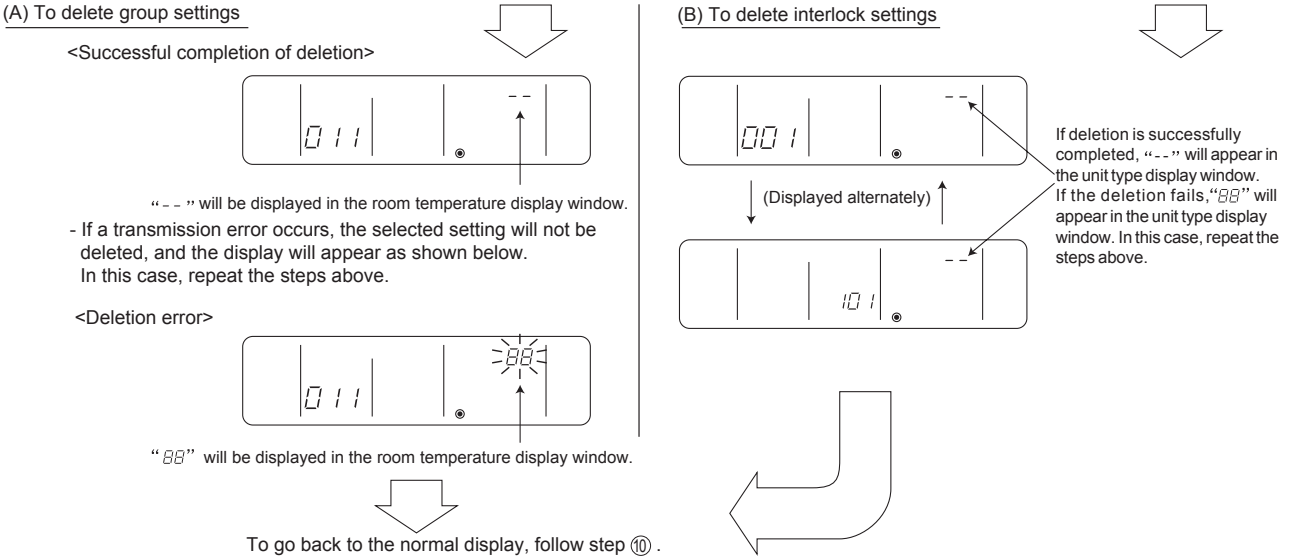

(4) Making (A) Group settings and (B) Interlock settings of a group from any arbitrary remote controller

(A) Group settings and (B) Interlock settings of a group can be made from any arbitrary remote controller.
Refer to "(B) Interlock Settings" under section 1 "Group Settings/Interlock Settings" for operation procedures.
Set the address as shown below.

(A) To make group settings
Interlocked unit address display window...Remote controller address
Indoor unit address display window.....The address of the indoor unit to be controlled with the remote controller

(B) To make interlock settings
Interlocked unit address display window...LOSSNAY address
Indoor unit address display window.....The address of the indoor unit to be interlocked with the LOSSNAY

2. Remote controller function selection via the ME remote controller

In the remote controller function selection mode, the settings for three types of functions can be made or changed as necessary.

1) Operation mode display selection mode (Display or non-display of COOL/HEAT during automatic operation mode)
When the automatic operation mode is selected, the indoor unit will automatically perform a cooling or heating operation based on the room temperature. In this case, "AUTO COOL" or "AUTO HEAT" will appear on the remote controller display.
This setting can be changed so that only "AUTO" will appear on the display.

2) Room temperature display selection mode (Display or non-display of room temperature)
Although the suction temperature is normally displayed on the remote controller, the setting can be changed so that it will not appear on the remote controller.

3) Narrowed preset temperature range mode
The default temperature ranges are 19°C to 30°C (67°F to 87°F) in the cooling/dry mode and 17°C to 28°C (63°F to 83°F) in the heating mode.
By changing these ranges (raising the lower limit for the cooling/dry mode and lowering the upper limit for the heating mode), energy can be saved.

NOTE

On the PAR-F27MEA-US model, automatic operation mode cannot be selected while the unit is in the narrowed preset temperature range mode.
Only the lower limit can be set for cooling/dry mode, and upper limit for heating mode.

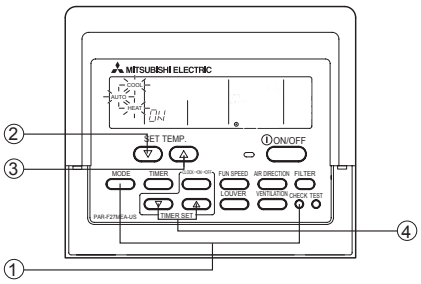

[Function selection mode sequence on the remote controller]

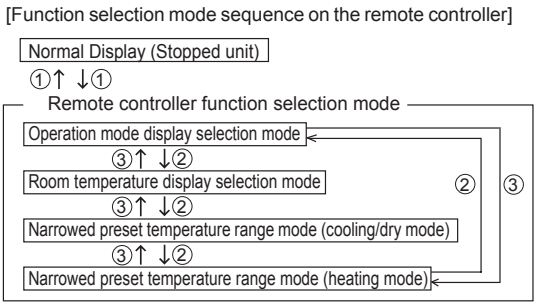

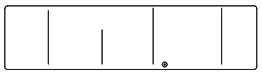

[Normal display]

①: Press and hold the [CHECK] and [MODE] buttons simultaneously for two seconds.
②: [SET TEMP. (▽)] button
③: [SET TEMP. (△)] button

[Operation Procedures]

1. Press the [ON/OFF] button on the remote controller to bring the unit to a stop. The display will appear as shown in the previous page (Normal display).
2. Press buttons ① [CHECK] and [MODE] simultaneously for 2 seconds to go into the "operation mode display selection mode" under the remote controller function selection mode. Press button ② [SET TEMP. (▽)] or ③ [SET TEMP. (△)] to go into the other three modes under the remote controller function selection mode.

Operation mode display selection mode (Display or non-display of room temperature on the remote controller.)

- "AUTO""COOL/HEAT"will blink, and either "ON" or "OFF" will light up. Press button④ [TIMER SET (△) or (▽)] in this state to switch between "ON" and "OFF."

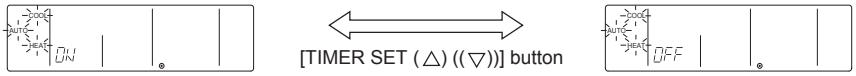

- When it is set to "ON," "AUTO" and "COOL" or "AUTO" and "HEAT" will appear on the display during automatic operation mode.
- When it is set to "OFF," only "AUTO" will appear on the display during automatic operation mode.

Room temperature display selection mode (Display or non-display of room temperature)

- "88 °F" will blink in the room temperature display window, and either "ON" or "OFF" will light up. Press button ④ [TIMER SET (△) or (▽)] in this state to switch between "ON" and "OFF."

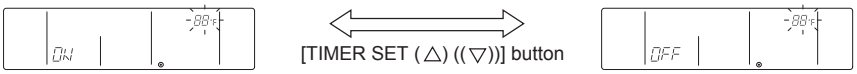

- When it is set to "ON," the room temperature will stay in the operation display window during operation.
- When it is set to "OFF," the room temperature will not appear in the operation display window during operation.

Narrowed preset temperature range mode (The range of preset temperature can be changed.)

1) Temperature range setting for the cooling/dry mode

"COOL/DRY"and "LIMIT TEMP." will light up in the display window, and the temperature range for the cooling/dry mode will appear on the display. The lower limit temperature will be blinking in the preset temperature display window. While it is blinking, the temperature setting can be changed.
[Selection range for the lower limit temperature] : 67°F ⟺ 87°F (Medium temperature range indoor unit 57°F ⟺ 87°F)
(The upper limit temperature is fixed at 87°F. Only the lower limit temperature is changeable.)

[When the temperature range for the cooling or dry mode is set to 67°F to 87°F]

2) Press button④ [TIMER SET (△) or (▽)] to set the lower limit temperature to the desired temperature.

[When the temperature range is changed to 75°F - 87°F]

3) After completing the step above, press button ② [SET TEMP. (▽)] to go into the temperature range setting mode to set the temperature range for the heating operation.

"HEAT" and "LIMIT TEMP" will light up, and the temperature range for the heating mode will appear on the screen.
The upper limit temperature can be changed with button ④ [TIMER SET (△) or (▽)].
[Selection range for the upper limit temperature] : 63°F ⟺ 83°F (Medium temperature range indoor unit 63°F ⟺ 83°F)
(The lower limit temperature is fixed at 63°F. Only the upper limit temperature is changeable.)

3. When all the necessary settings have been made, exit the remote controller function selection mode and go back to the Normal display by pressing and holding buttons ① [CHECK] and [MODE] simultaneously for 2 seconds.

[3] Interlock Settings via the MA Remote Controller

1. LOSSNAY interlock setting (Make this setting only when necessary.)

Make this setting only when necessary.

*When an upper controller is connected, make the settings on the upper controller.

NOTE : To perform an interlocked operation with LOSSNAY units, interlock all the indoor units in the group with the LOSSNAY units.

Perform this operation to enter the interlock setting between the LOSSNAY and the indoor units to which the remote controller is connected, or to search and delete registered information.
In the following example, the address of the indoor unit is 05 and the address of the LOSSNAY unit is 30.

[Operation Procedures]

① Press the ⏻[ON/OFF] button on the remote controller to bring the unit to a stop.
The display window on the remote controller must look like the figure below to proceed to step ②.

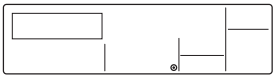

② Press and hold the [FILTER] and [ ] buttons simultaneously for two seconds to perform a search for the LOSSNAY that is interlocked with the indoor unit to which the remote controller is connected.

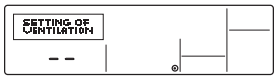

③ Search result
- The indoor unit address and the interlocked LOSSNAY address will appear alternately.

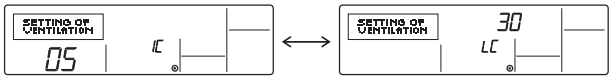

<Indoor unit address and indoor unit> <LOSSNAY address and LOSSNAY>

- Without interlocked LOSSNAY settings

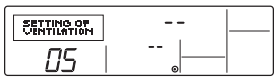

④ If no settings are necessary, exit the window by pressing and holding the [FILTER] and [ ] buttons simultaneously for 2 seconds.
Go to step **1. Registration Procedures** to make the interlock settings with LOSSNAY units, or go to step **2. Search Procedures** to search for a particular LOSSNAY unit.
Go to step **3. Deletion Procedures** to delete any LOSSNAY settings.

< 1. Registration Procedures >

⑤ To interlock an indoor unit with a LOSSNAY unit, press the [TEMP. (▽) or (△)] button on the remote controller that is connected to the indoor unit, and select its address (01 to 50).
⑥ Press the [CLOCK (▽) or (△)] button to select the address of the LOSSNAY to be interlocked (01 to 50).

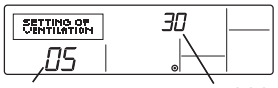

Indoor unit address LOSSNAY address

⑦ Press the [TEST] button to register the address of the selected indoor unit and the interlocked LOSSNAY unit.
- Registration completed
The registered indoor unit address and "IC," and the interlocked LOSSNAY address and "LC" will appear alternately.

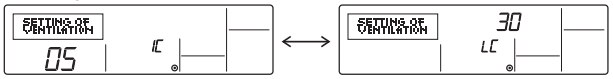

- Registration error
If the registration fails, the indoor unit address and the LOSSNAY address will be displayed alternately.

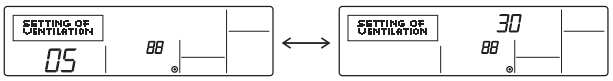

Registration cannot be completed: The selected unit address does not have a corresponding indoor unit or a LOSSNAY unit.
Registration cannot be completed: Another LOSSNAY has already been interlocked with the selected indoor unit.

< 2. Search Procedures >

⑧To search for the LOSSNAY unit that is interlocked with a particular indoor unit, enter the address of the indoor unit into the remote controller that is connected to it.

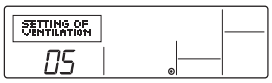

<Indoor unit address>

⑨Press the [◷ MENU] button to search for the address of the LOSSNAY unit that is interlocked with the selected indoor unit.

- Search completed (With a LOSSNAY connection)
  The indoor unit address and " IC," and the interlocked LOSSNAY address and "LC" will appear alternately.

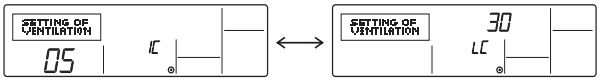

- Search completed (No interlocked settings with a LOSSNAY exist.)

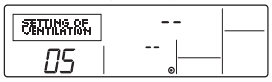

- The selected address does not have a corresponding indoor unit.

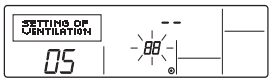

< 3. Deletion Procedures >

Take the following steps to delete the interlock setting between a LOSSNAY unit and the interlocked indoor unit from the remote controller that is connected to the indoor unit.

⑩Find the address of the LOSSNAY to be deleted (See section **2. Search Procedures**.), and bring up the result of the search for both the indoor unit and LOSSNAY on the display.

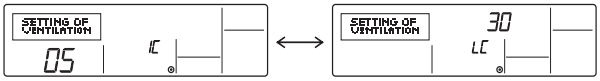

⑪Press the [◷ ON/OFF] button twice to delete the address of the LOSSNAY unit that is interlocked with the selected indoor unit.

- Registration completed
  The indoor unit address and "--," and the interlocked LOSSNAY address and "--" will appear alternately.

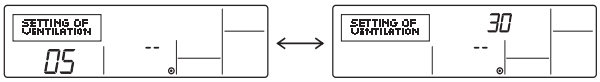

-Deletion error
  If the deletion fails

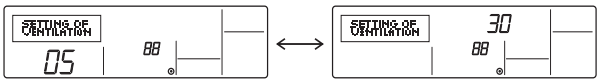

2. Remote controller function selection via the MA remote controller

(1) Remote controller function

The settings for the following remote controller functions can be changed in the remote controller function selection mode.
Change the settings as necessary.

Category 1	Category 2	Category 3 (Setting content)
1.Language selection (“CHANGE LANGUAGE”)	Select the language in which the menu appears.	•Multi-language display is supported.
2.Function lock (“FUNCTION SELECTION”)	(1) Function lock setting (“LOCKING FUNCTION”)	•Sets the type of locking to put into effect
	(2) Use of automatic mode (“SELECT AUTO MODE”)	•Enables or disables automatic operation mode
	(3) Temperature range setting (“LIMIT TEMP FUNCTION”)	•Sets the adjustable temperature range (maximum, minimum)
3.Mode selection (“MODE SELECTION”)	(1) Remote controller main/sub setting (“CONTROLLER MAIN/SUB”)	•Sets the remote controller as main or sub * When two remote controllers are connected to the same group, one controller must be set as sub.
	(2) Clock enable/disable function (“CLOCK”)	•Enables or disables clock function
	(3) Timer function setting (“WEEKLY TIMER”)	•Sets the timer type
	(4)Technical assistance contact number setting (“CALL”)	•Contact number can be set to appear in case of error. •Sets the telephone number
4.Display mode (“DISP MODE SETTING”)	(1) Temperature unit selection (“TEMP MODE °C/°F”)	•Sets the temperature unit (°C or °F) for display
	(2) Suction air temperature display setting (“ROOM TEMP DISP SELECT”)	•Switches between display and non-display of indoor (suction) air temperature
	(3) Automatic cooling/heating display setting (“AUTO MODE DISP C/H”)	•Switches between display and non-display of “Cool”or“Heat”during automatic mode

[Function selection flowchart]

[1] Stop the air conditioner to start the remote controller function selection mode. → [2] Select from category 1. → [3] Select from category 2. → [4] Make the setting. → [5] Setting completed → [6] Go back to the normal display (Finish)

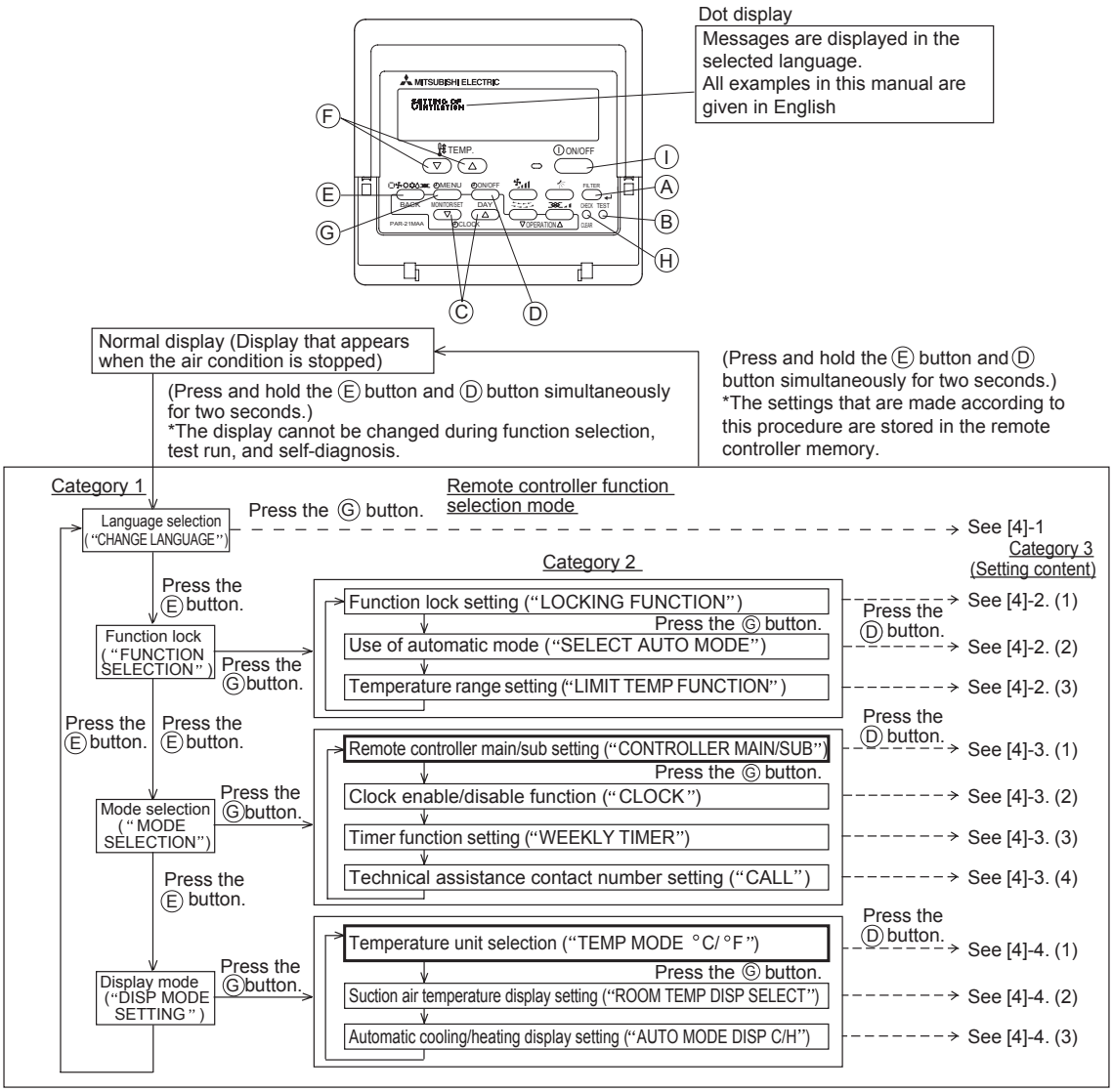

NOTE
Timer operation stops when the display is changed from remote controller function selection to normal display.

[Setting details]

[4] -1. Language selection

The language that appears on the dot display can be selected from among the following.

- Press the [◴ MENU] button to change the following setting.

① Japanese (JP), ② English (GB), ③ German (D), ④ Spanish (E), ⑤ Russian (RU), ⑥ Italian (I), ⑦ Chinese (CH), ⑧ French (F)

[4] -2. Function lock

(1) Function lock setting

- Press the [◴ ON/OFF] button to change the following setting.

① no1: All buttons except the [⏻ ON/OFF] button are locked.
② no2: All buttons are locked.
③ OFF (Initial setting): No buttons are locked.

* To enable locking from the normal display, press and hold the [FILTER] and [⏻ ON/OFF] buttons simultaneously for two seconds on the normal display after the above setting is made.

(2) Automatic mode display selection

When the remote controller is connected to a unit with an automatic operation mode, the following settings can be made.

- Press the [◴ ON/OFF] button to change the following setting.

① ON (Initial setting) : Automatic mode is displayed when the operation mode is selected.
② OFF : Automatic mode is not displayed when the operation mode is selected.

(3) Temperature range setting

After this setting is made, the temperature can be changed within the set range.

- Press the [◴ ON/OFF] button to change the following setting.

① LIMIT TEMP COOL MODE:
The temperature range for the cooling/dry mode can be changed.
② LIMIT TEMP HEAT MODE:
The temperature range for the heating mode can be changed.
③ LIMIT TEMP AUTO MODE:
The temperature range for the automatic mode can be changed.
④ OFF (Initial setting): The temperature range is not set.

* When any setting other than OFF is selected, the temperature range setting for cooling, heating, and automatic mode is also made. The range setting will not take effect if the temperature range has not been set.

- To increase or decrease the temperature, press the [TEMP (▽) or (△)] button.
- To switch between the upper limit setting and the lower limit setting, press the button. The selected setting will flash, allowing the temperature to be set.
- Settable range

Cooling/Dry mode	Lower limit: 19°C ~ 30°C [67°F ~ 87°F]
	Upper limit: 30°C ~ 19°C [87°F ~ 67°F]
Heating mode	Lower limit: 17°C ~ 28°C [63°F ~ 83°F]
	Upper limit: 28°C ~ 17°C [83°F ~ 63°F]
Automatic mode	Lower limit: 19°C ~ 28°C [67°F ~ 83°F]
	Upper limit: 28°C ~ 19°C [83°F ~ 67°F]

* The settable range varies depending on the unit to be connected. (Mr. Slim units, Free-plan units, and medium temperature range units)

[4] -3. Mode selection

(1) Remote controller main/sub setting

- Press the [◴ ON/OFF] button to change the following setting.

① Main: Designates the controller as the main controller.
② Sub: Designates the controller as the sub controller.

(2) Clock enable/disable function

- Press the [◴ ON/OFF] button to change the following setting.

① ON: Clock function is enabled.
② OFF: Clock function is disabled.

(3) Timer function setting

- Press the [◴ ON/OFF] button to change the following setting. (Select one of the following.)

① WEEKLY TIMER (Initial setting): Weekly timer function is enabled
② AUTO OFF TIMER: Auto off timer function is enabled
③ SIMPLE TIMER: Simple timer function is enabled.
④ TIMER MODE OFF: Timer function is disabled.

* When the clock setting is set to OFF, the "WEEKLY TIMER" is disabled.

(4) Technical assistance contact number setting

- Press the [◴ ON/OFF] button to change the following setting.

① CALL OFF: The set contact numbers are not displayed in an error situation.
② CALL **** *** ****: The set contact numbers are displayed in an error situation.
CALL_: Contact numbers can be entered when the display appears as shown on the left.

- Setting the contact numbers

To set the contact numbers, follow the following procedures.
Move the flashing cursor to set the numbers. Press the [TEMP. (▽) or (△)] button to move the cursor right (left).
Press the [◴ CLOCK(▽) or (△)] button to set the numbers.

[4] -4. Display mode change

(1) Temperature unit selection

- Press the [◴ ON/OFF] button to change the following setting.

①°C (Initial setting): Temperature is displayed in° C.
②°F: Temperature is displayed in° F.

(2) Suction air temperature display setting

- Press the [◴ ON/OFF] button to change the following setting.

① ON: Suction air temperature is displayed.
② OFF: Suction air temperature is not displayed.

(3) Automatic cooling/heating display setting

- Press the [◴ ON/OFF] button to change the following setting.

① ON: Either "COOL" or "HEAT" is displayed during automatic mode.
② OFF: Only "AUTO" is displayed during automatic mode.

[4] Using the built-in Temperature Sensor on the Remote Controller

1. Selecting the position of temperature detection (Factory setting: SW1-1 on the controller board on the indoor unit is set to OFF.)

To use the built-in sensor on the remote controller, set the SW1-1 on the controller board on the indoor unit to ON.

- Some models of remote controllers are not equipped with a built-in temperature sensor. Use the built-in temperature sensor on the indoor unit instead.
- When using the built-in sensor on the remote controller, install the remote controller where room temperature can be detected.

Ⅴ Electrical Wiring Diagram

[1] Electrical Wiring Diagram of the Outdoor Unit 105
[2] Electrical Wiring Diagram of the BC Controller 109

[1] Electrical Wiring Diagram of the Outdoor Unit

1. Electrical wiring diagram of the outdoor unit

(1) PUHY-P72, P96, 108, P126 and P144 models

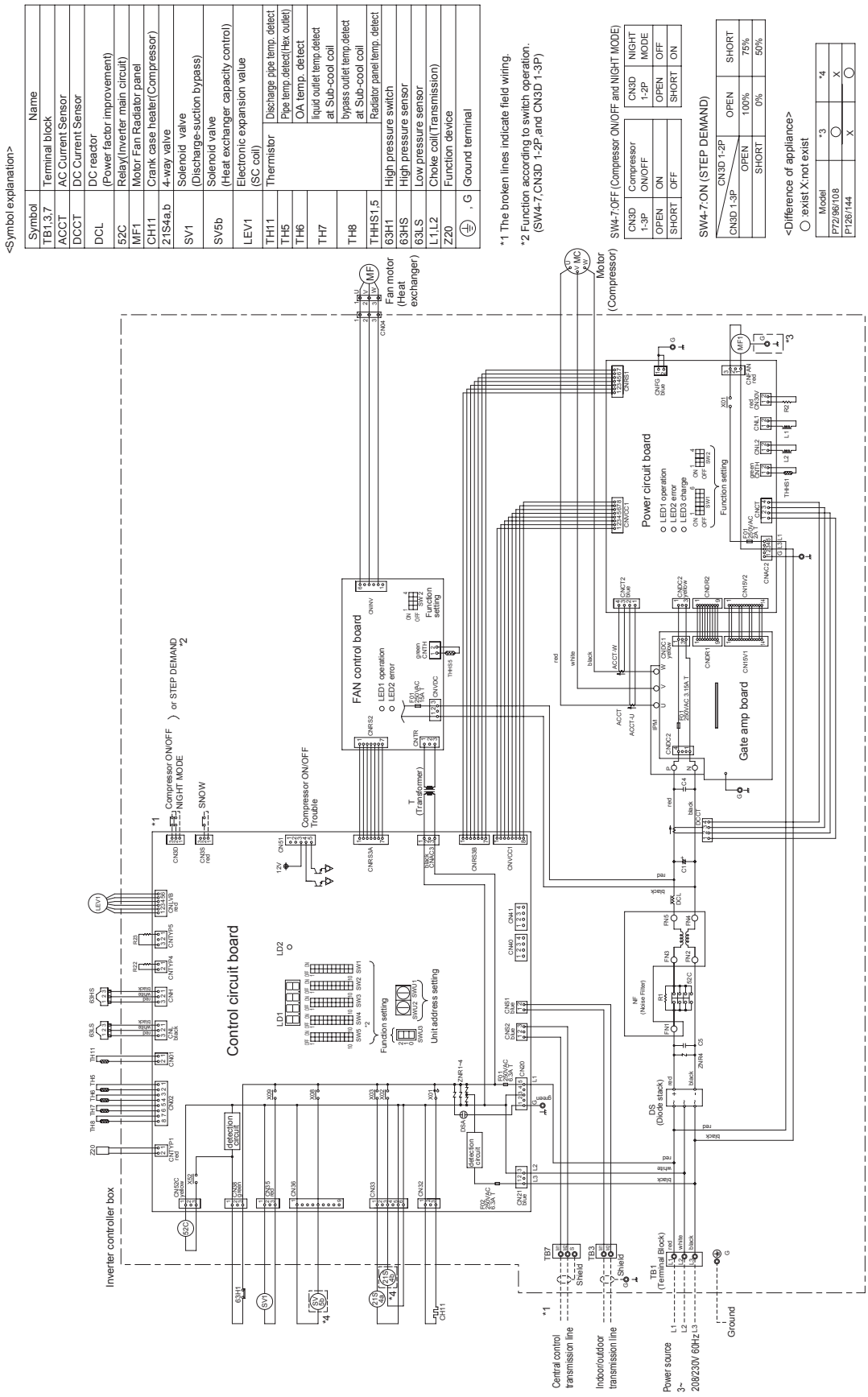

<Symbol explanation>

Symbol	Name
TB1,3,7	Terminal block
ACCT	AC Current Sensor
DCCT	DC Current Sensor
DCL	DC reactor (Power factor improvement)
52C	Relay(Inverter main circuit)
MF1	Motor Fan Radiator panel
CH11	Crank case heater(Compressor)
21S4a,b	4-way valve
SV1	Solenoid valve (Discharge-suction bypass)
SV5b	Solenoid valve (Heat exchanger capacity control)
LEV1	Electronic expansion value (SC coil)
TH11	Thermistor: Discharge pipe temp. detect
TH5	Thermistor: Pipe temp.detect(Hex outlet)
TH6	Thermistor: OA temp. detect
TH7	Thermistor: liquid outlet temp.detect at Sub-cool coil
TH8	Thermistor: bypass outlet temp.detect at Sub-cool coil
THHS1,5	Thermistor: Radiator panel temp. detect
63H1	High pressure switch
63HS	High pressure sensor
63LS	Low pressure sensor
L1,L2	Choke coil(Transmission)
Z20	Function device
⏚ , G	Ground terminal

*1 The broken lines indicate field wiring.

*2 Function according to switch operation. (SW4-7,CN3D 1-2P,and CN3D 1-3P)

SW4-7:OFF (Compressor ON/OFF and NIGHT MODE)

CN3D 1-3P	Compressor ON/OFF
OPEN	ON
SHORT	OFF

CN3D 1-2P	NIGHT MODE
OPEN	OFF
SHORT	ON

SW4-7:ON (STEP DEMAND)

CN3D 1-2P / CN3D 1-3P	OPEN	SHORT
OPEN	100%	75%
SHORT	0%	50%

<Difference of appliance>

○ :exist X:not exist

Model	*3	*4
P72/96/108	○	X
P126/144	X	○

(2) PUHY-P168, P192, P204, P216 and P234 models

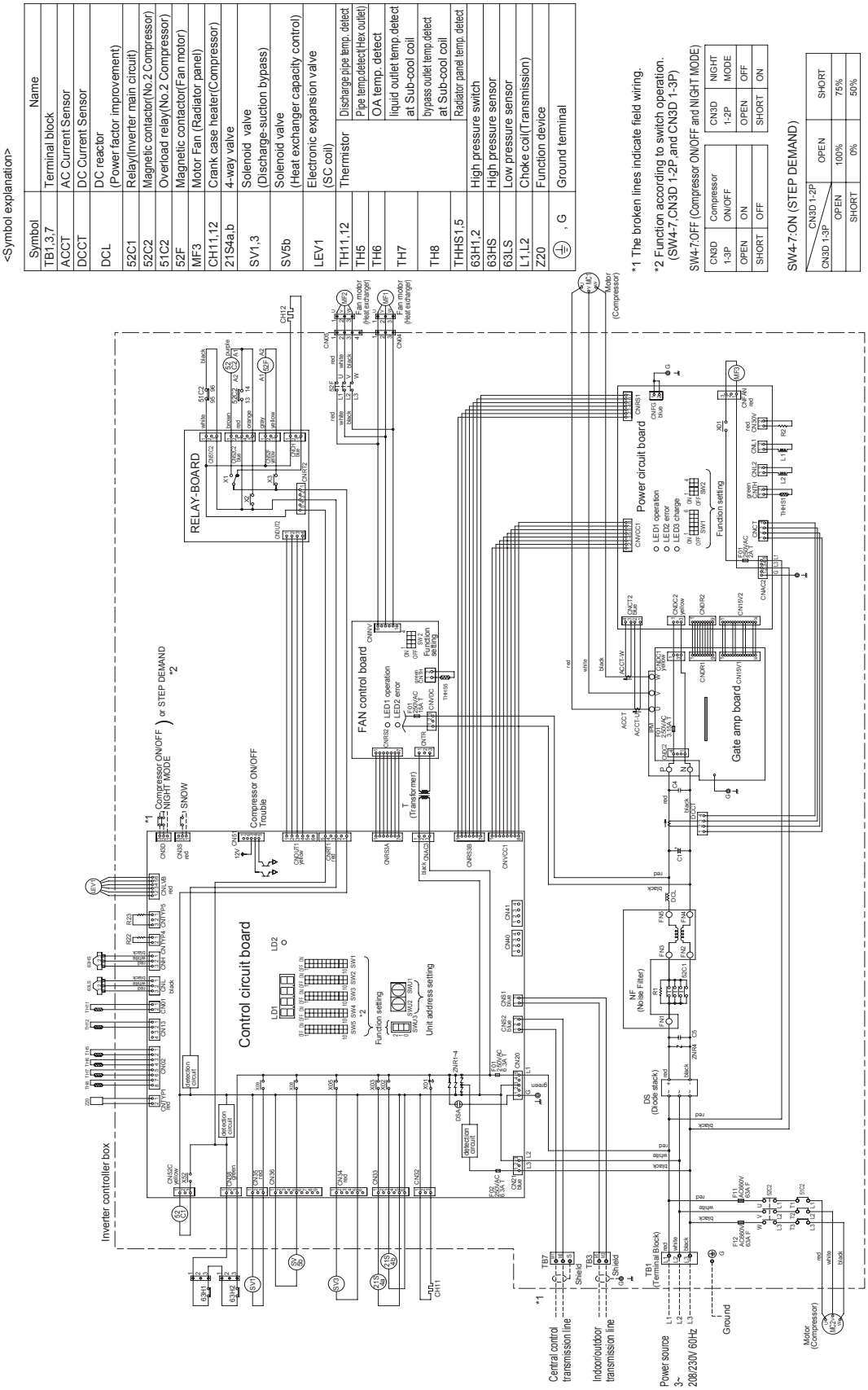

<Symbol explanation>

Symbol	Name
TB1,3,7	Terminal block
ACCT	AC Current Sensor
DCCT	DC Current Sensor
DCL	DC reactor (Power factor improvement)
52C1	Relay(Inverter main circuit)
52C2	Magnetic contactor(No.2 Compressor)
51C2	Overload relay(No.2 Compressor)
52F	Magnetic contactor(Fan motor)
MF3	Motor Fan (Radiator panel)
CH11,12	Crank case heater(Compressor)
21S4a,b	4-way valve
SV1,3	Solenoid valve (Discharge-suction bypass)
SV5b	Solenoid valve (Heat exchanger capacity control)
LEV1	Electronic expansion valve (SC coil)
TH11,12	Thermistor — Discharge,pipe temp. detect
TH5	Pipe temp.detect(Hex outlet)
TH6	O A temp. detect
TH7	liquid outlet temp.detect at Sub-cool coil
TH8	bypass outlet temp.detect at Sub-cool coil
THHS1,5	Radiator panel temp. detect
63H1,2	High pressure switch
63HS	High pressure sensor
63LS	Low pressure sensor
L1,L2	Choke coil(Transmission)
Z20	Function device
⏚ , G	Ground terminal

*1 The broken lines indicate field wiring.

*2 Function according to switch operation. (SW4-7,CN3D 1-2P, and CN3D 1-3P)

SW4-7:OFF (Compressor ON/OFF and NIGHT MODE)

CN3D 1-3P	Compressor ON/OFF
OPEN	ON
SHORT	OFF

CN3D 1-2P	NIGHT MODE
OPEN	OFF
SHORT	ON

SW4-7:ON (STEP DEMAND)

CN3D 1-2P / CN3D 1-3P	OPEN	SHORT
OPEN	100%	75%
SHORT	0%	50%

(3) PURY-P72, P96, P108, P126 and P144 models

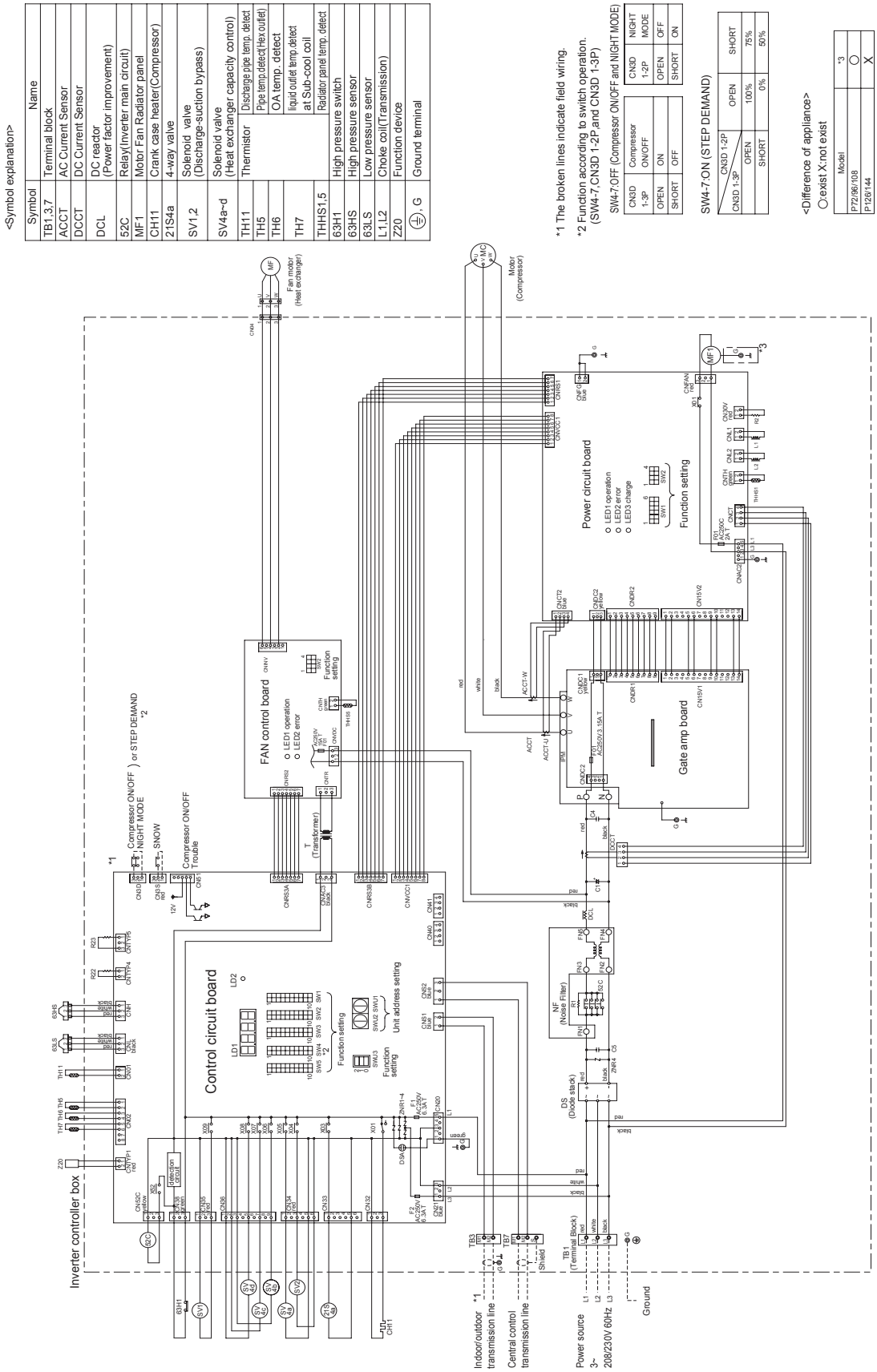

<Symbol explanation>

Symbol	Name
TB1,3,7	Terminal block
ACCT	AC Current Sensor
DCCT	DC Current Sensor
DCL	DC reactor (Power factor improvement)
52C	Relay(Inverter main circuit)
MF1	Motor Fan Radiator panel
CH11	Crank case heater(Compressor)
21S4a	4-way valve
SV1,2	Solenoid valve (Discharge-suction bypass)
SV4a~d	Solenoid valve (Heat exchanger capacity control)
TH11	Thermistor: Discharge pipe temp. detect
TH5	Thermistor: Pipe temp.detect(Hex outlet)
TH6	Thermistor: OA temp. detect
TH7	Thermistor: liquid outlet temp.detect at Sub-cool coil
THHS1,5	Thermistor: Radiator panel temp. detect
63H1	High pressure switch
63HS	High pressure sensor
63LS	Low pressure sensor
L1,L2	Choke coil(Transmission)
Z0	Function device
⏚, G	Ground terminal

*1 The broken lines indicate field wiring.

*2 Function according to switch operation. (SW4-7,CN3D 1-2P and CN3D 1-3P)

SW4-7:OFF (Compressor ON/OFF and NIGHT MODE)

CN3D 1-3P	Compressor ON/OFF
OPEN	ON
SHORT	OFF

CN3D 1-2P	NIGHT MODE
OPEN	OFF
SHORT	ON

SW4-7:ON (STEP DEMAND)

CN3D 1-3P \ CN3D 1-2P	OPEN	SHORT
OPEN	100%	75%
SHORT	0%	50%

<Difference of appliance>
○:exist X:not exist

Model	*3
P72/96/108	○
P126/144	X

(4) PURY-P168, P192, P204, P216 and P234 models

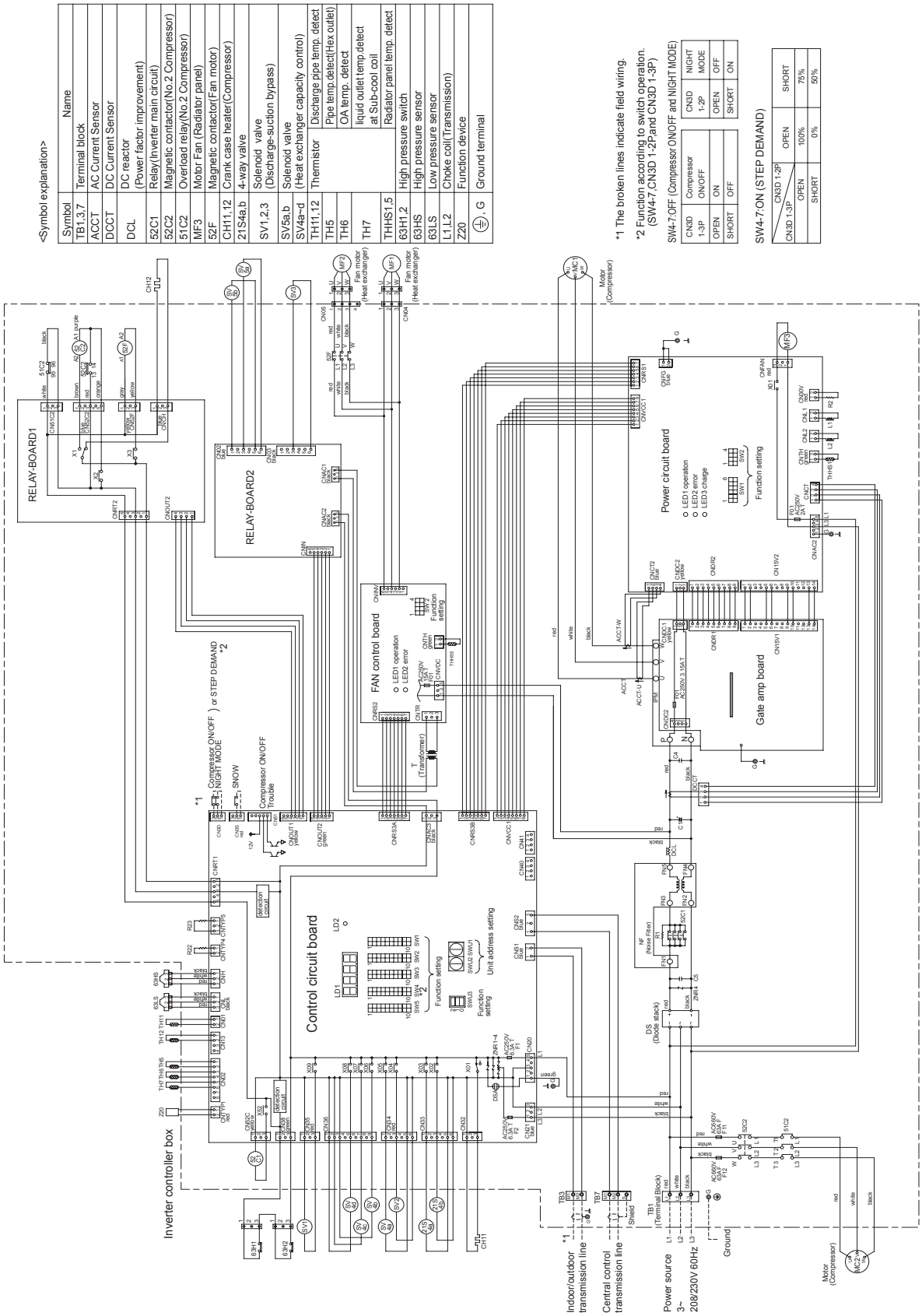

<Symbol explanation>

Symbol	Name
TB1,3,7	Terminal block
ACCT	AC Current Sensor
DCCT	DC Current Sensor
DCL	DC reactor (Power factor improvement)
52C1	Relay(Inverter main circuit)
52C2	Magnetic contactor(No.2 Compressor)
51C2	Overload relay(No.2 Compressor)
MF3	Motor Fan (Radiator panel)
52F	Magnetic contactor(Fan motor)
CH11,12	Crank case heater(Compressor)
21S4a,b	4-way valve
SV1,2,3	Solenoid valve (Discharge-suction bypass)
SV5a,b	Solenoid valve (Heat exchanger capacity control)
SV4a~d	
TH11,12	Thermistor
TH5	Discharge pipe temp. detect
TH6	Pipe temp.detect(Hex outlet)
TH7	OA temp. detect
	liquid outlet temp.detect at Sub-cool coil
THHS1,5	Radiator panel temp. detect
63H1,2	High pressure switch
63HS	High pressure sensor
63LS	Low pressure sensor
L1,L2	Choke coil(Transmission)
Z20	Function device
⏚, G	Ground terminal

*1 The broken lines indicate field wiring.

*2 Function according to switch operation. (SW4-7, CN3D 1-2P,and CN3D 1-3P)

SW4-7:OFF (Compressor ON/OFF and NIGHT MODE)

CN3D 1-3P	Compressor ON/OFF
OPEN	ON
SHORT	OFF

CN3D 1-2P	NIGHT MODE
OPEN	OFF
SHORT	ON

SW4-7:ON (STEP DEMAND)

CN3D 1-3P \ CN3D 1-2P	OPEN	SHORT
OPEN	100%	75%
SHORT	0%	50%

[2] Electrical Wiring Diagram of the BC Controller

(1) CMB-P104NU-G

(Symbol explanation)

Symbol	Name
TR	Transformer
TH11,12,15,16	Thermister sensor
LEV1,3	Expansion valve
PS1,3	Pressure sensor
CONT.B	Circuit board / BC controller
TB01	Terminal block (for power source)
TB02	Terminal block (for Transmission)
SV1~4A,B,C	Solenoid valve
SVM1	Solenoid valve
T1~4	Terminal
F01	Fuse AC250V 6.3A F

Note: 1. TB02 is transmission terminal block. Never connect power line to it.
2. The initial set values of switch on CONT.B are as follows.
SW1:0
SW2:0

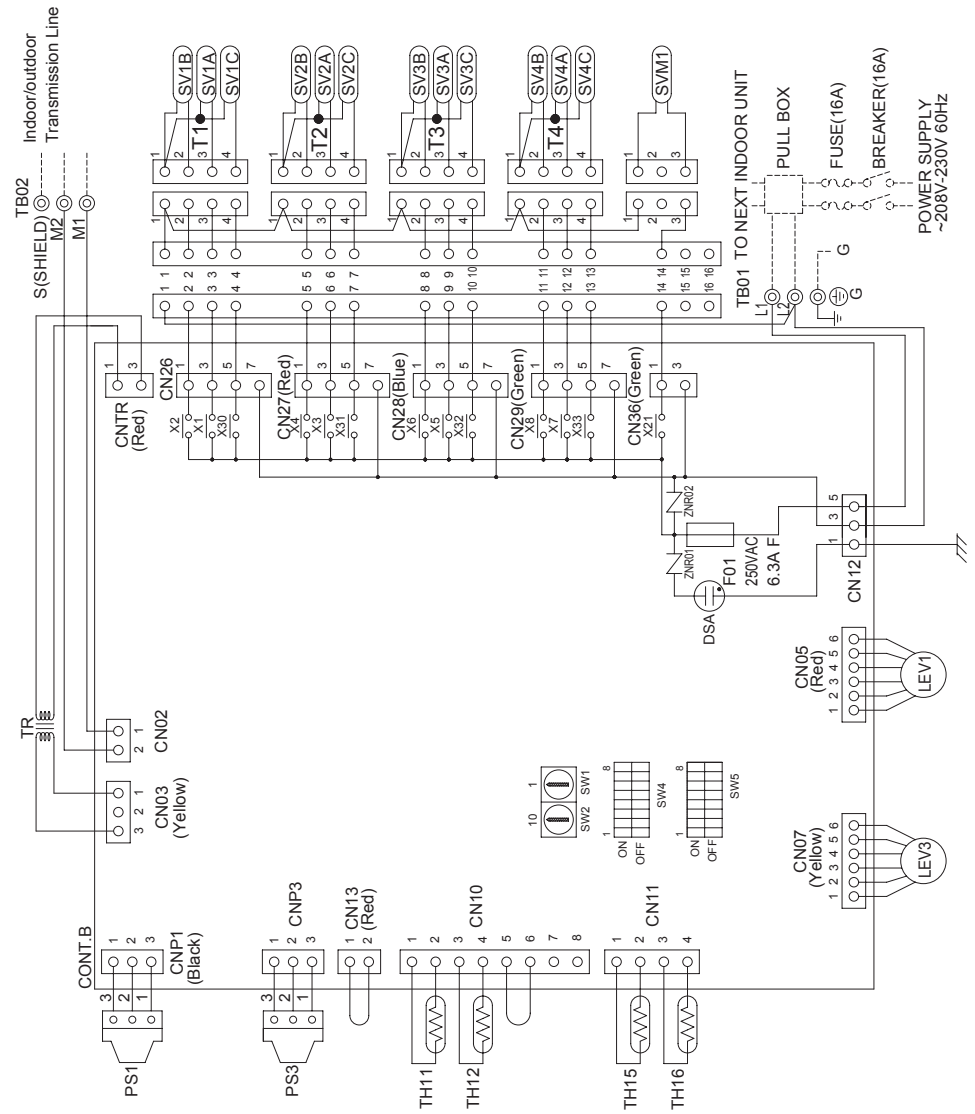

(2) CMB-P105 and 106NU-G

(Symbol explanation)

Symbol	Name
TR	Transformer
TH11,12,15,16	Thermister sensor
LEV1,3	Expansion valve
PS1,3	Pressure sensor
CONT.B	Circuit board / BC controller
TB01	Terminal block (for power source)
TB02	Terminal block (for Transmission)
SV1~6A,B,C	Solenoid valve
SVM1	Solenoid valve
T1~6	Terminal
F01	Fuse AC250V 6.3A F

Note: 1.TB02 is transmission terminal block. Never connect power line to it.
2.The initial set values of switch on CONT.B are as follows.
SW1:0
SW2:0

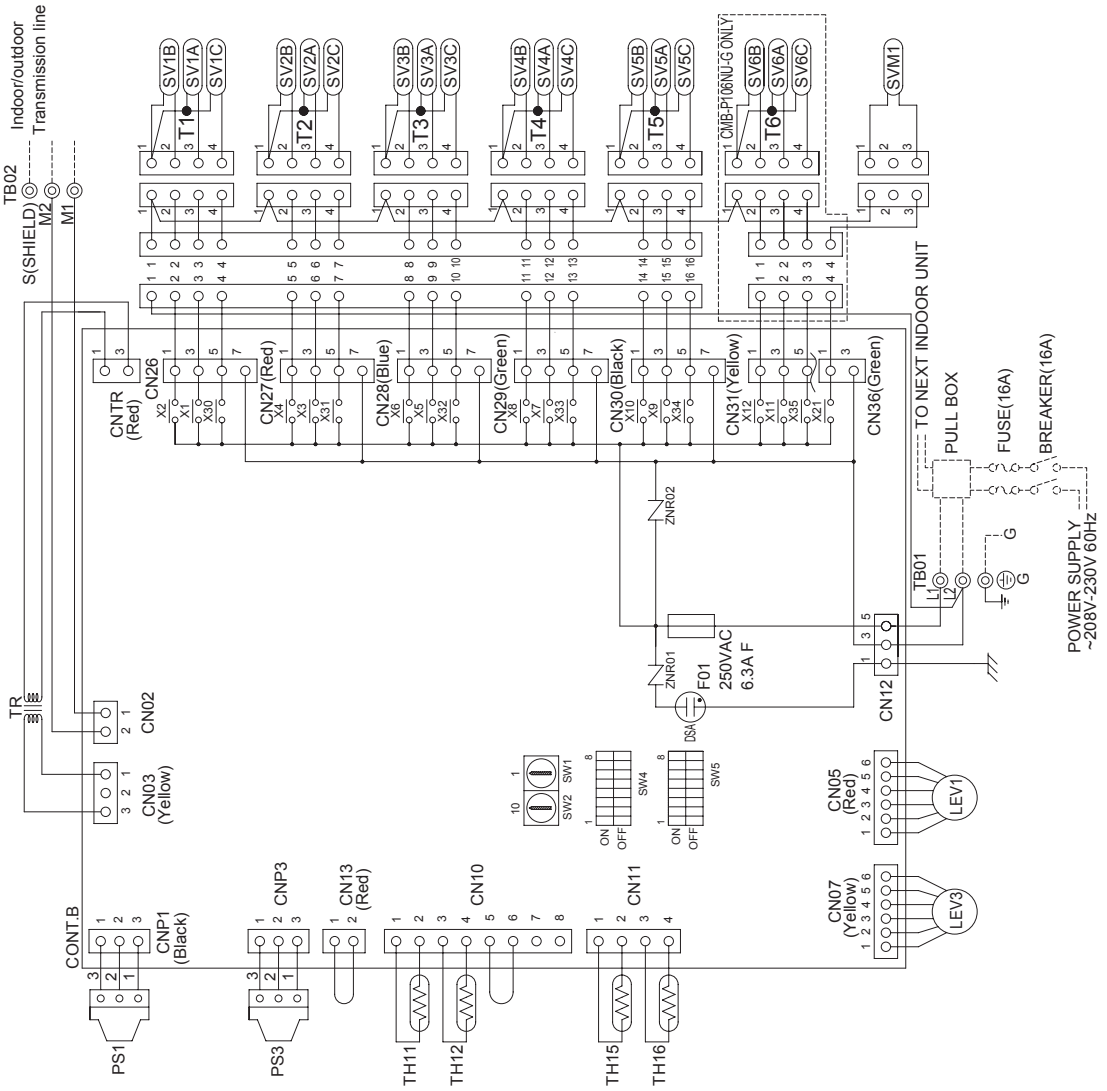

(3) CMB-P108 and 1010NU-G

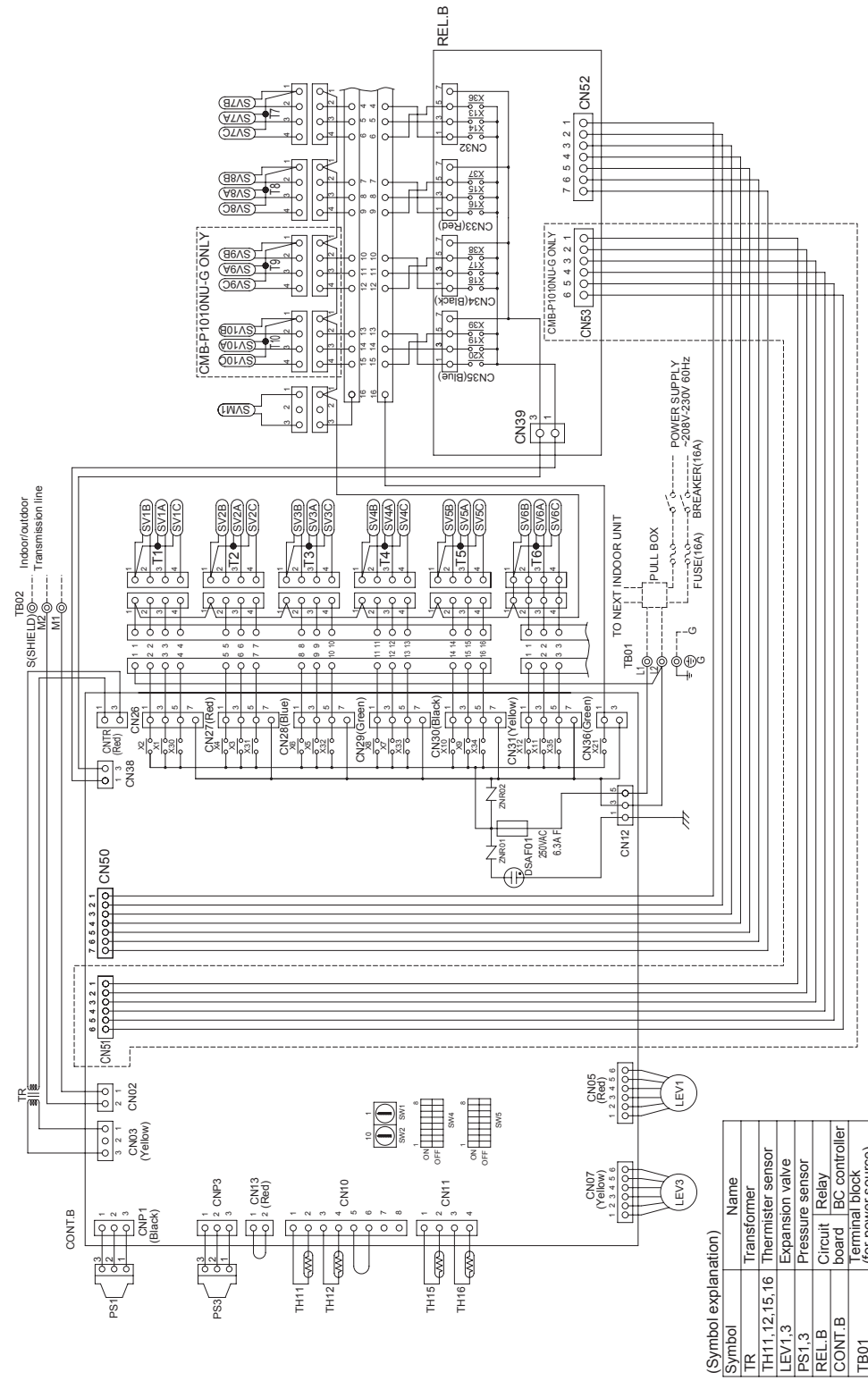

Note:1.TB02 is transmission terminal block. Never connect power line to it.

2.The initial set values of switch on CONT.B are as follows.
SW1:0
SW2:0

(Symbol explanation)

Symbol	Name
TR	Transformer
TH11,12,15,16	Thermister sensor
LEV1,3	Expansion valve
PS1,3	Pressure sensor
REL.B	Circuit board / Relay BC controller
CONT.B	Terminal block (for power source)
TB01	Terminal block (for Transmission)
TB02	Solenoid valve
SV1~10A,B,C	Solenoid valve
SVM1	Terminal
T1~10	Fuse AC250V 6.3A F
F01	

(4) CMB-P1013 and 1016NU-G

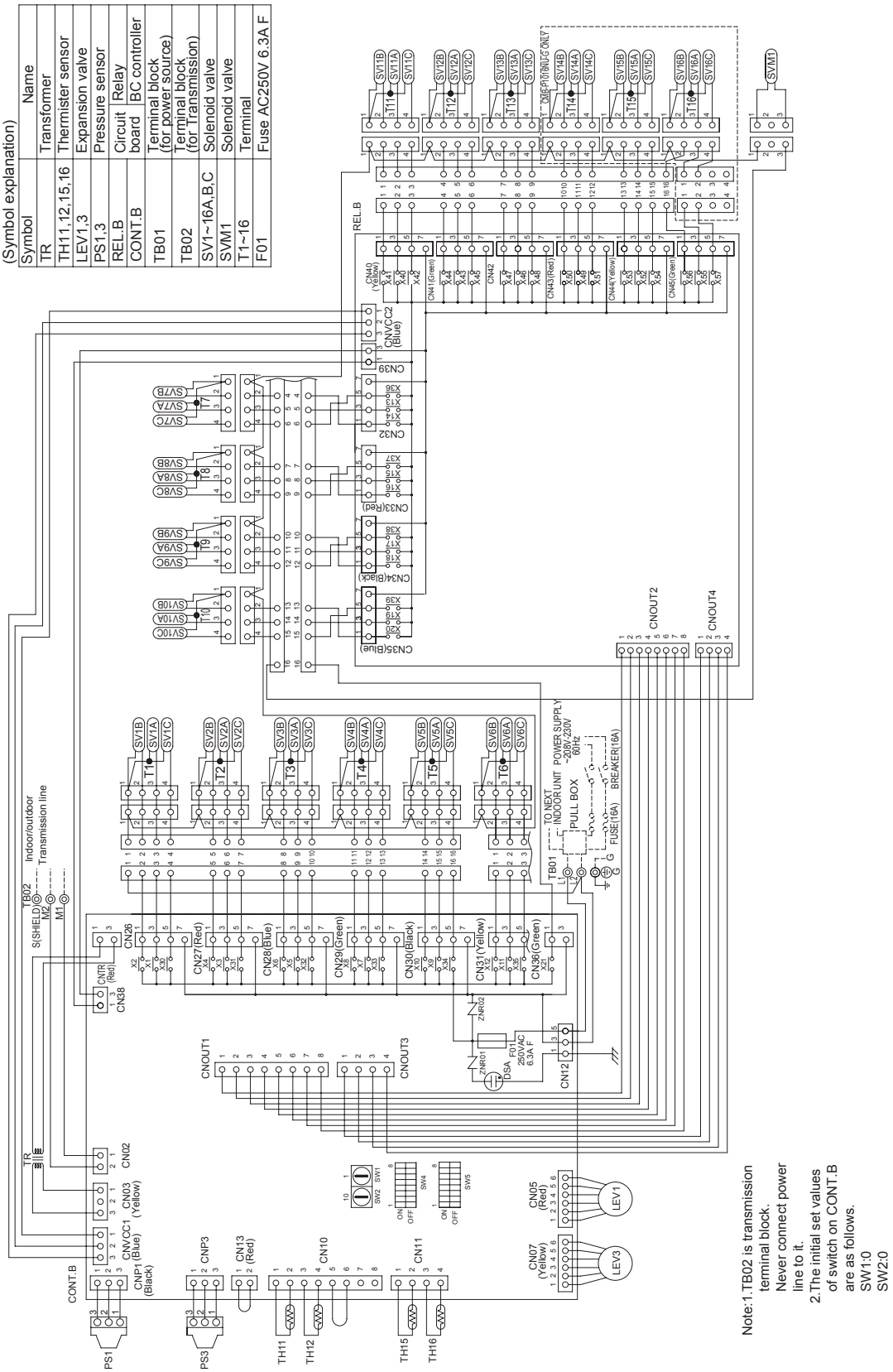

(5) CMB-P108 and 1010NU-GA

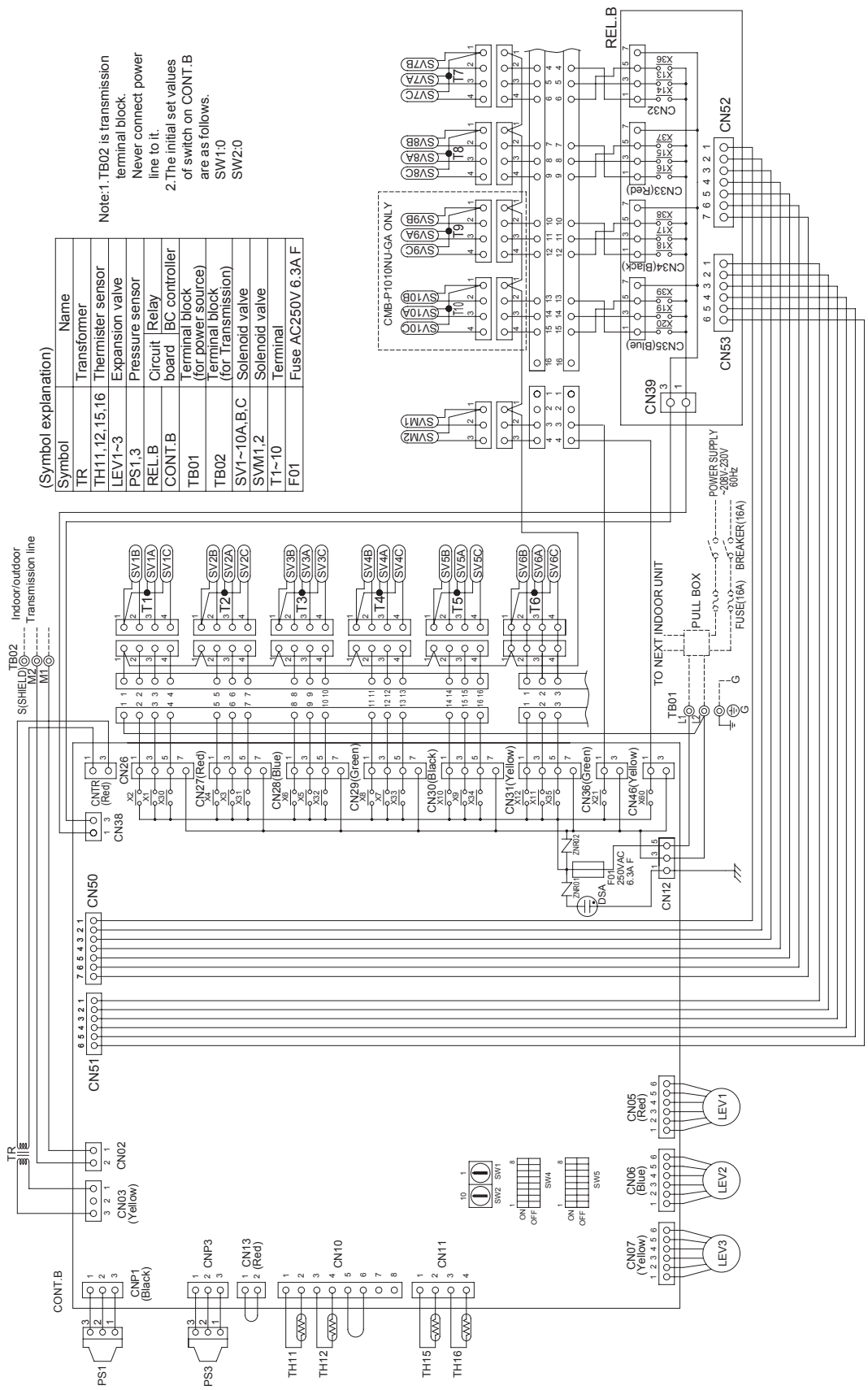

(6) CMB-P1013 and 1016NU-GA

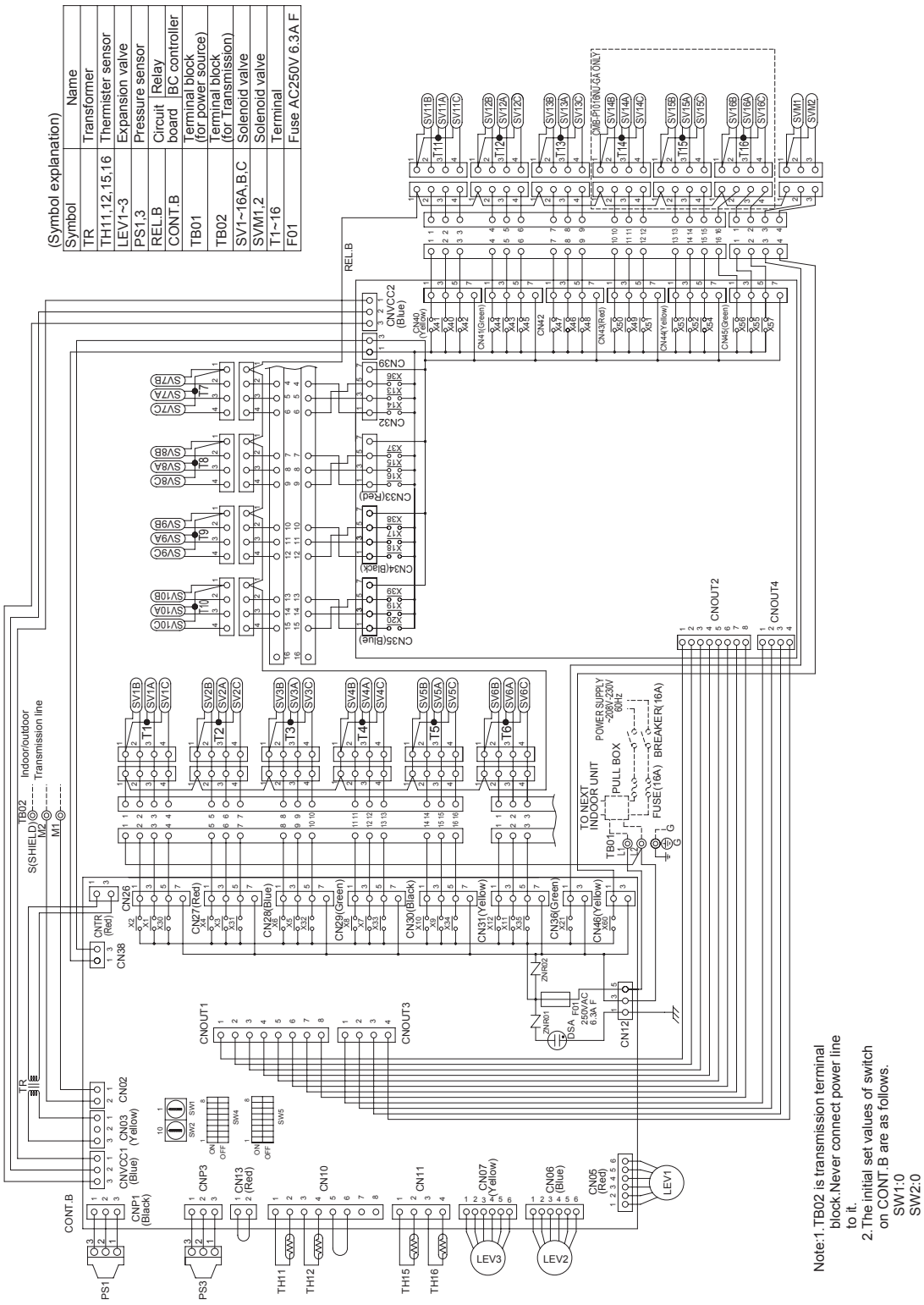

(7) CMB-P104NU-GB

(Symbol explanation)

Symbol	Name
TR	Transformer
TH12,15	Thermister sensor
LEV3	Expansion valve
CONT.B	Circuit board / BC controller
TB01	Terminal block (for power source)
TB02	Terminal block (for Transmission)
SV1~4A,B,C	Solenoid valve
T1~4	Terminal
F01	Fuse AC250V 6.3A F

Note:1.TB02 is transmission terminal block. Never connect power line to it.
2.The initial set values of switch on CONT.B are as follows.
SW1:0
SW2:0

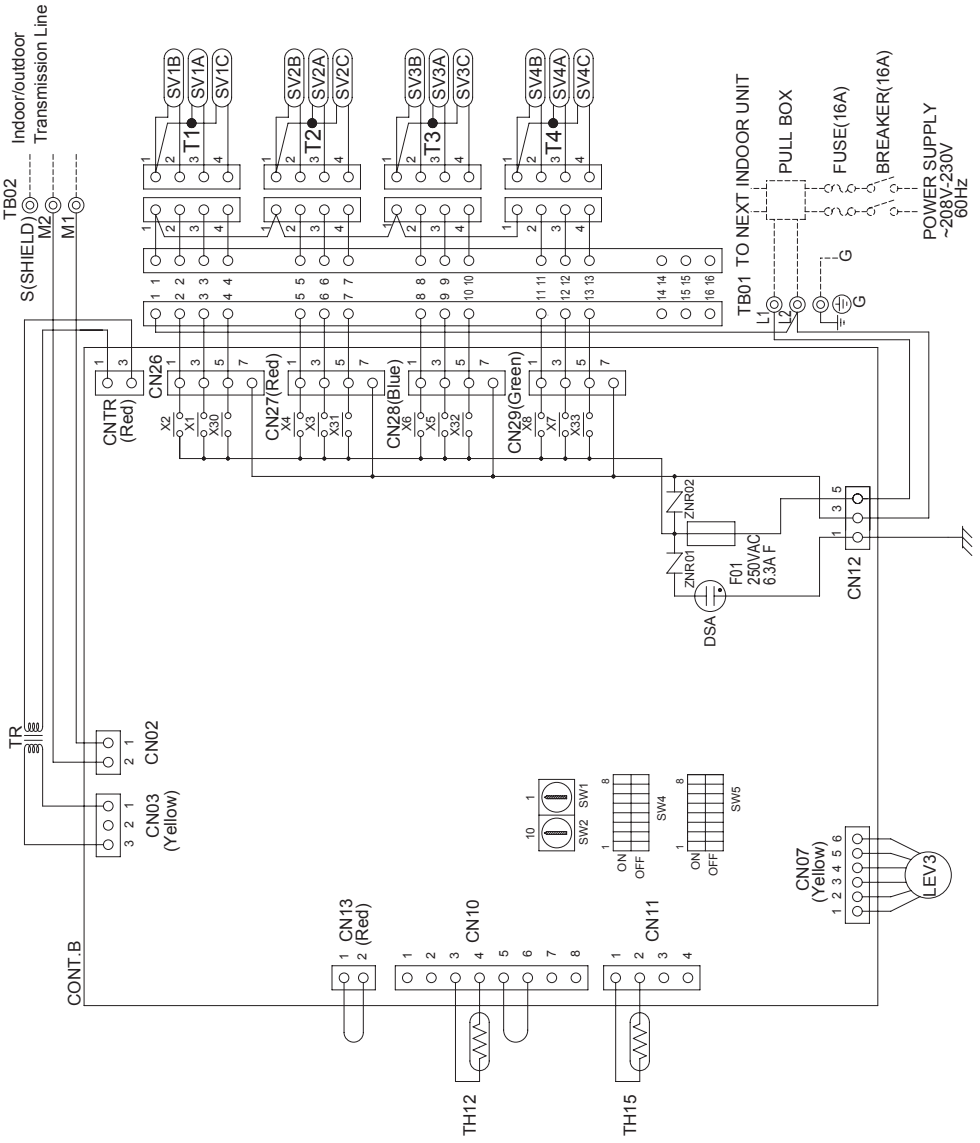

(8) CMB-P108NU-GB

(Symbol explanation)

Symbol	Name
TR	Transformer
TH12,15	Thermister sensor
LEV3	Expansion valve
REL.B	Circuit board Relay
CONT.B	BC controller
TB01	Terminal block (for power source)
TB02	Terminal block (for Transmission)
SV1~8A,B,C	Solenoid valve
T1~8	Terminal
F01	Fuse AC250V 6.3A F

Note:1.TB02 is transmission terminal block. Never connect power line to it.
2.The initial set values of switch on CONT.B are as follows.
SW1:0
SW2:0

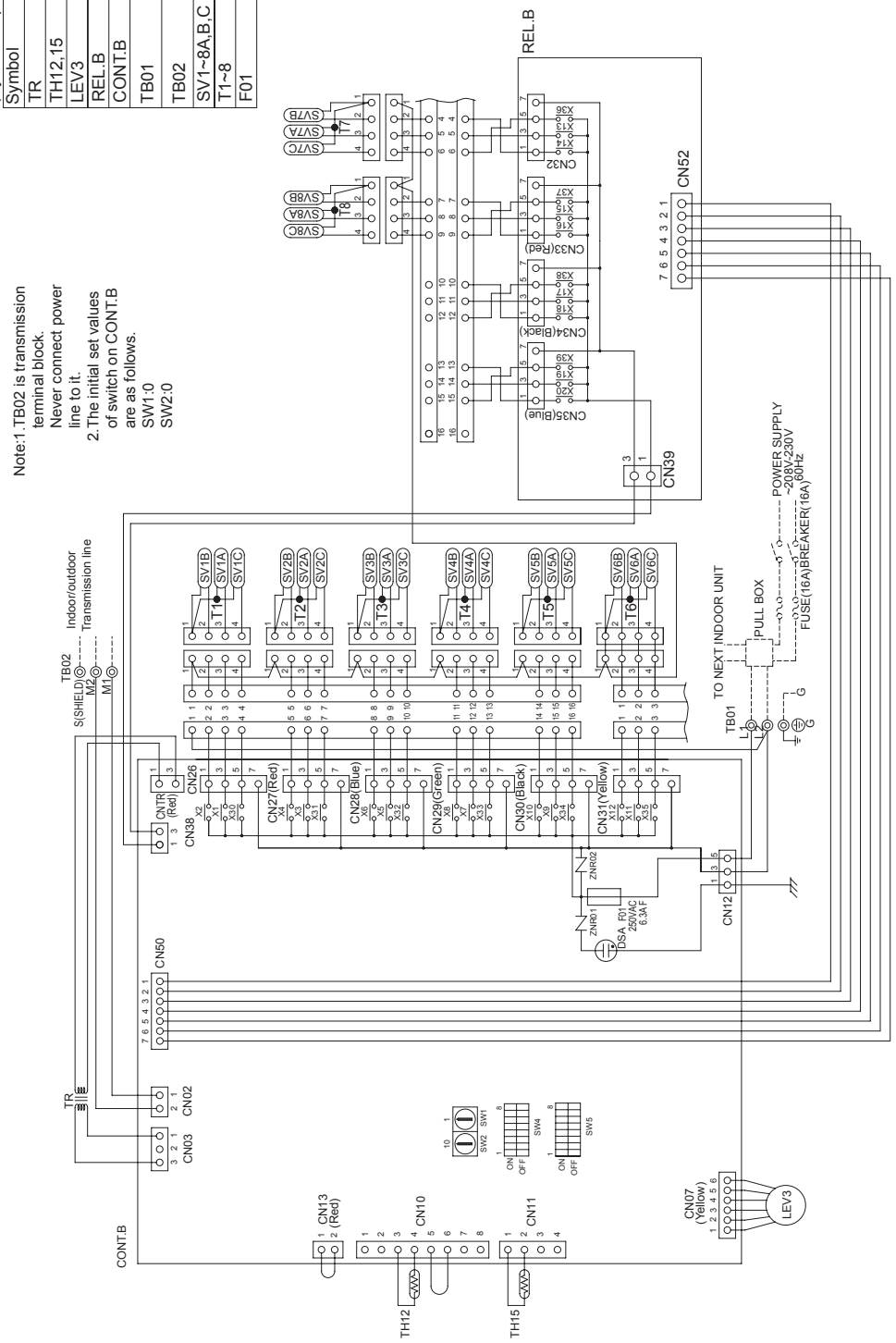

Ⅵ Refrigerant Circuit

[1] Refrigerant Circuit Figure 119
[2] Principal Parts and Functions 126

[1] Refrigerant Circuit Figure

1. Outdoor unit

(1) PUHY-P72, P96 and P108 models

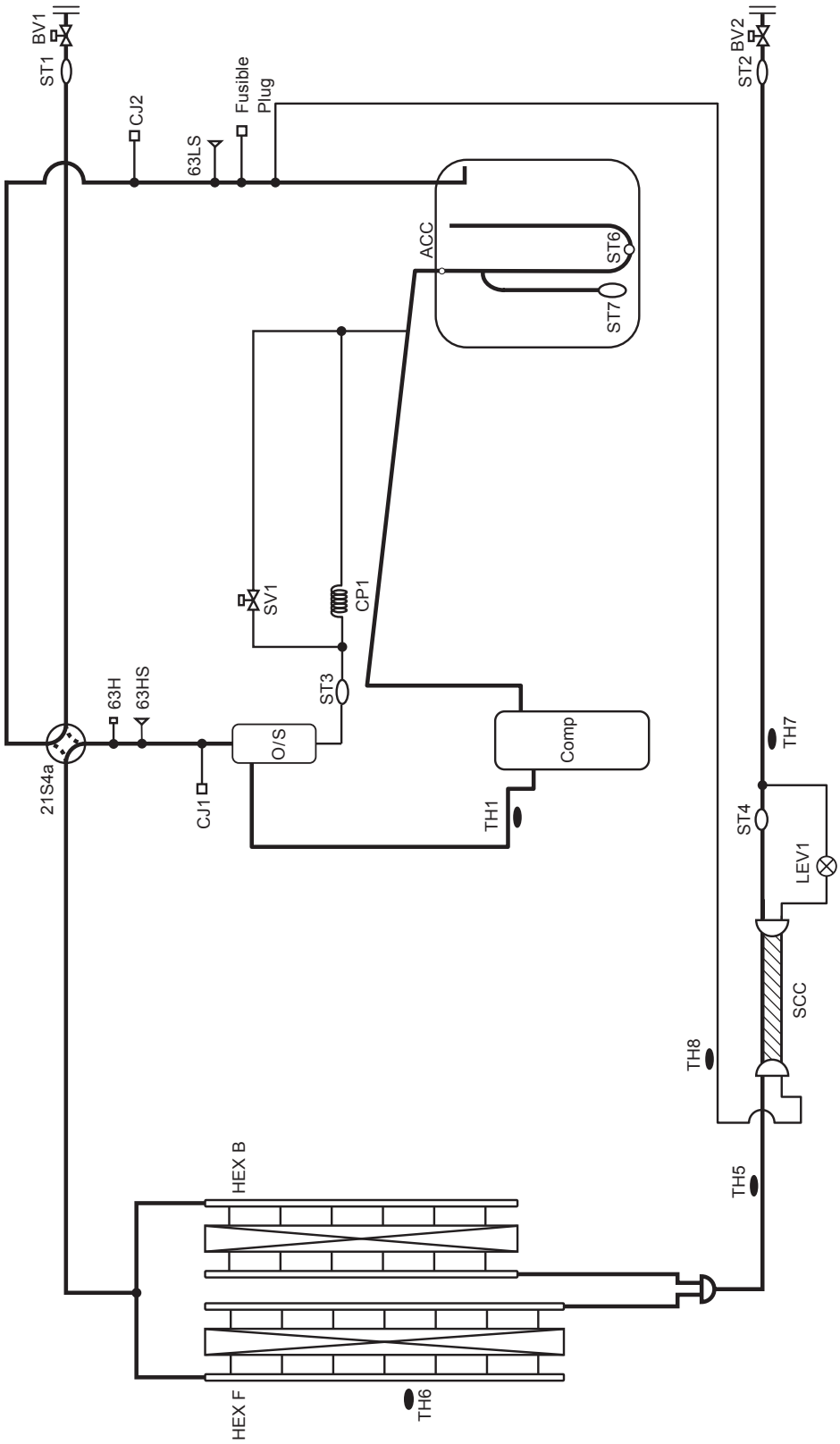

(2) PUHY-P126 and P144 models

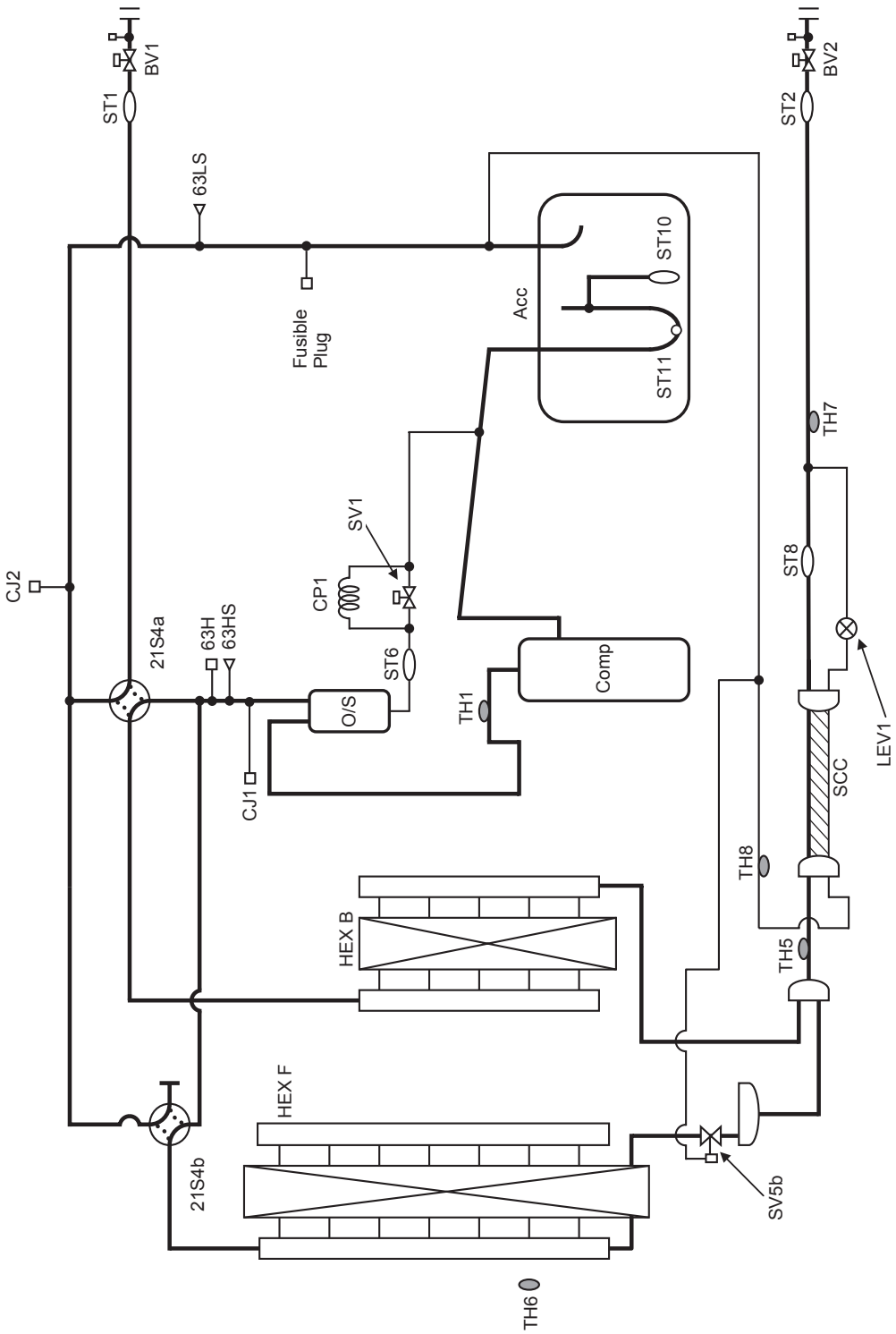

(3) PUHY-P168, P192, P204, P216 and P234 models

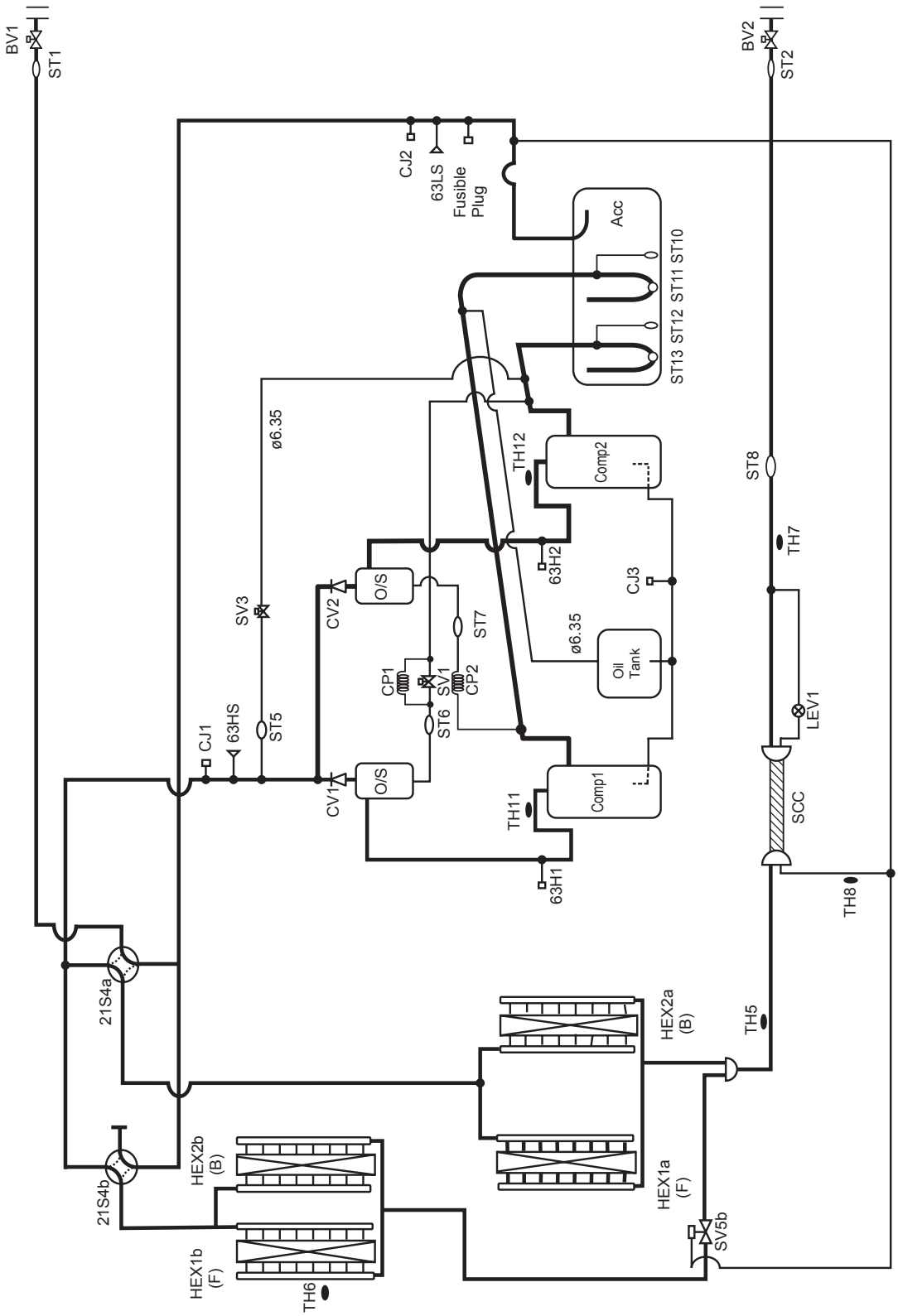

(4) PURY-P72, P96, P108, P126 and P144 models

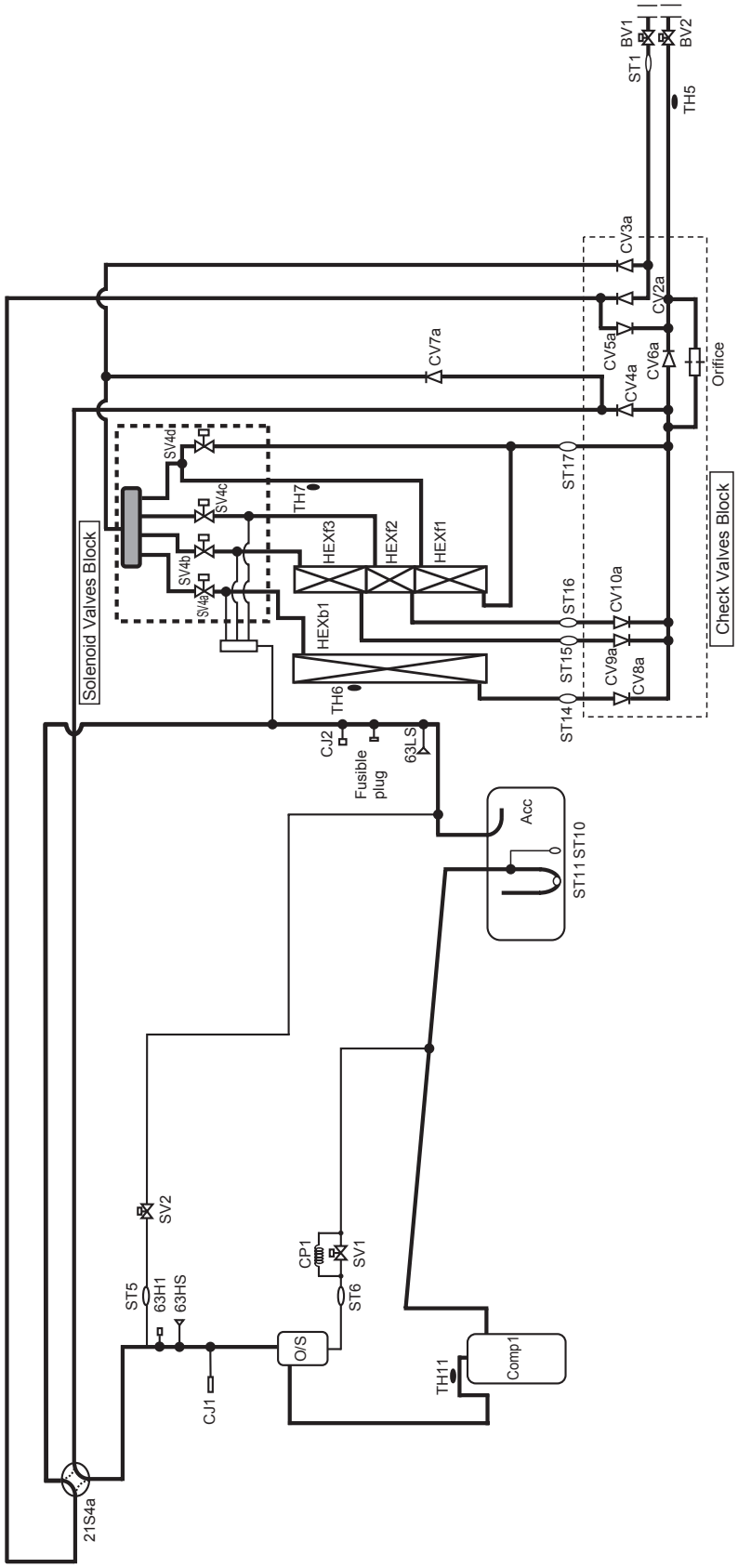

(5) PURY-P168, P192, P204, P216 and P234 models

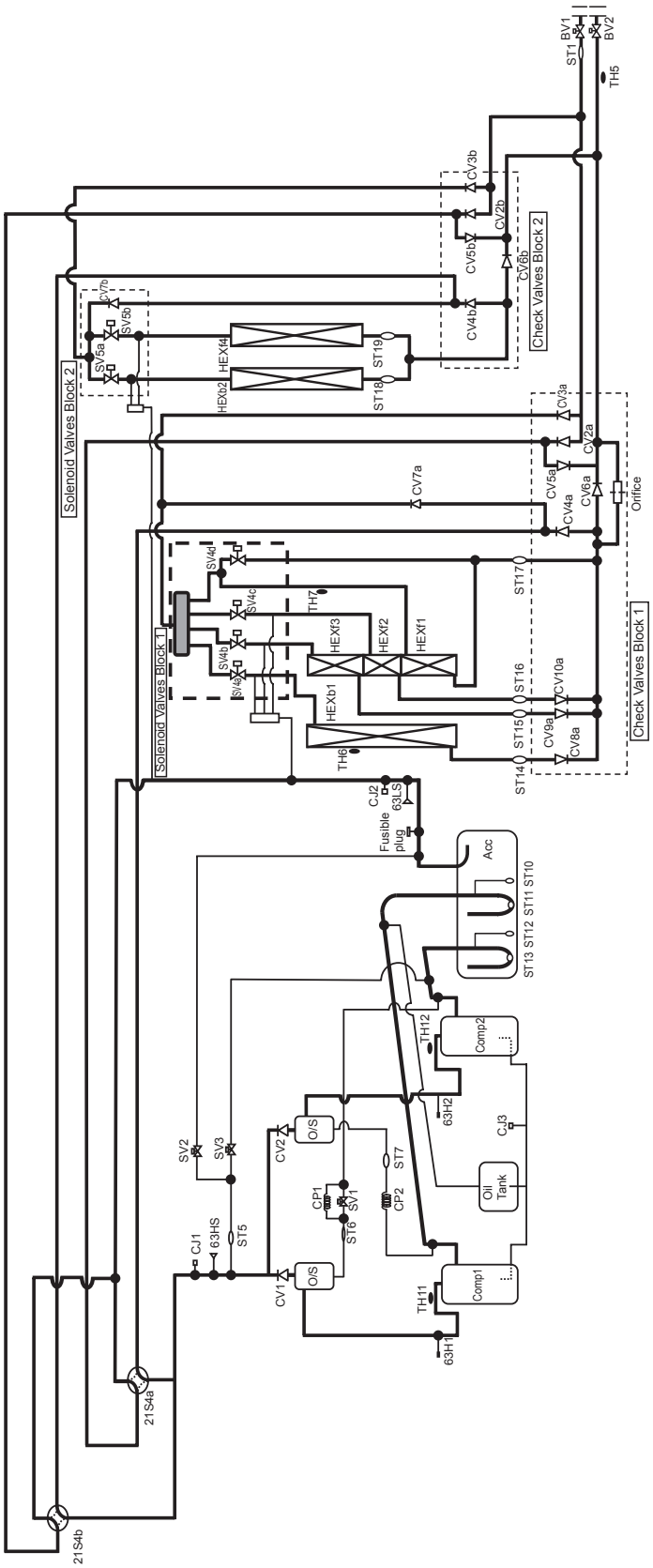

2. BC controller

(1) CMB-P104, P105, P106, P108, P1010, P1013 and P1016NU-G

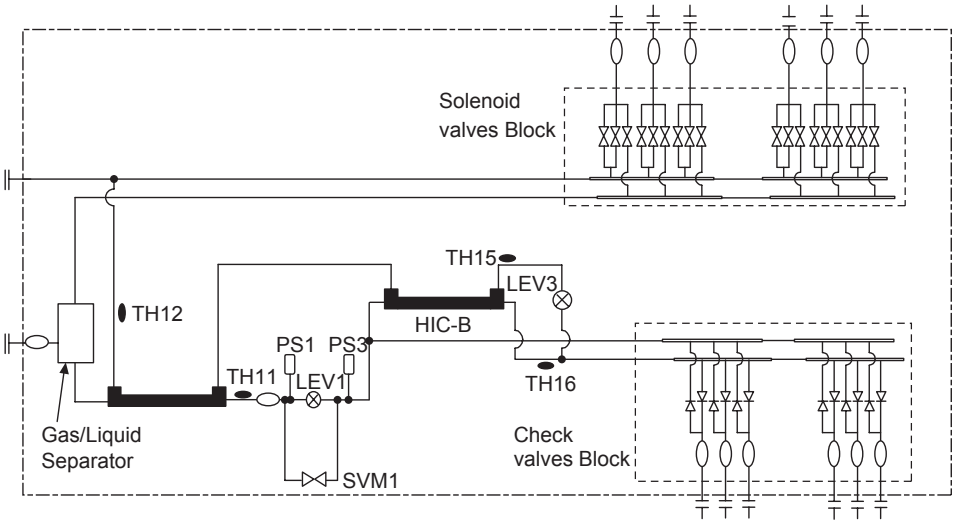

(2) CMB-P108, P1010, P1013 and P1016NU-GA (main)

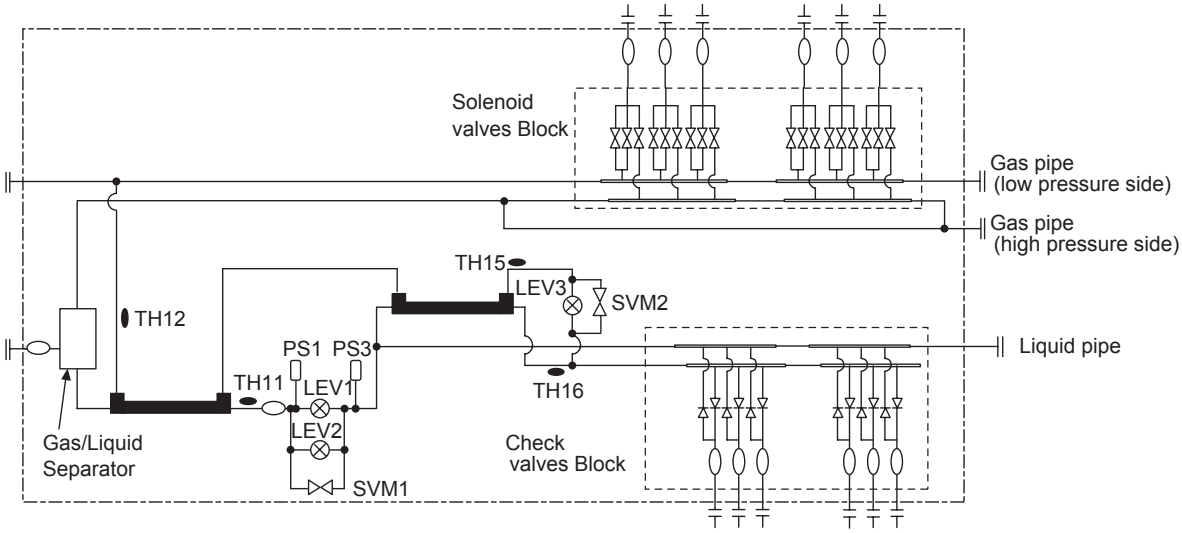

(3) CMB-P104 and P108NU-GB (sub)

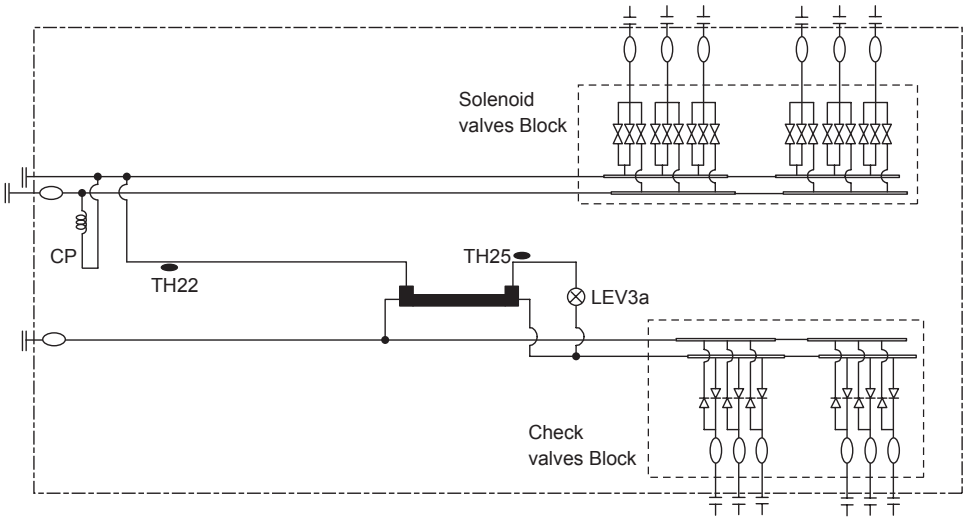

[2] Principal Parts and Functions

1. Outdoor unit

(1) PUHY

Part name	Symbols (functions)	Notes	Usage	Specifications	Check method
Compres-sor	MC1 (Comp1)		Adjusts the amount of circulating refrigerant by adjusting the operating frequency based on the operating pressure data	Low-pressure shell scroll compressor Wirewound resistance 10°C[50°F] :0 .155ohm 20°C[68°F] : 0.161ohm 30°C[86°F] : 0.167ohm	
	MC2 (Comp2)	P168-P234 models only	Operates to secure a constant amount of circulating refrigerant when the load exceeds comp1's capacity	Low-pressure shell scroll compressor Wirewound resistance 10°C[50°F] : 0.467ohm 20°C[68°F] : 0.486ohm 30°C[86°F] : 0.505ohm	
High pressure sensor	63HS		1. Detects high pressure 2. Regulates frequency and provides high-pressure protection	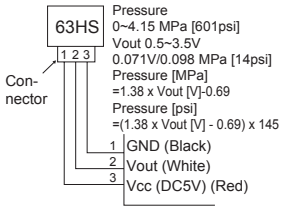	
Low pressure sensor	63LS		1. Detects low pressure 2. Provides low-pressure protection	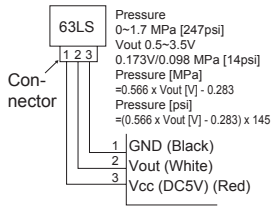	
Pressure switch	63H1 63H2	63H2 is available only on P168-P234 models	1. Detects high pressure 2. Provides high-pressure protection	4.15MPa[601psi] OFF setting	

Part name	Symbols (functions)	Notes	Usage	Specifications	Check method
Ther-mistor	TH11 TH12 (Discharge)	TH12 is available only on P168-P234 models	1. Detects discharge air temperature 2. Provides high-pressure protection	$R_{120} = 7.465k\Omega$ $R_{25/120} = 4057$ $R_t = 7.465\exp\{4057(\frac{1}{273+t} - \frac{1}{393})\}$	Resistance check
			0°C[32°F] :698kohm 10°C[50°F] :413kohm 20°C[68°F] :250kohm 30°C[86°F] :160kohm 40°C[104°F] :104kohm 50°C[122°F] : 70kohm 60°C[140°F] : 48kohm 70°C[158°F] : 34kohm 80°C[176°F] : 24kohm 90°C[194°F] :17.5kohm 100°C[212°F] :13.0kohm 110°C[230°F] : 9.8kohm		
	TH5 (Pipe temperature)		1. Controls frequency 2. Controls defrosting during heating operation 3. Detects subcool at the heat exchanger outlet and controls LEV1 based on HPS data and TH5 data	$R_0 = 15k\Omega$ $R_{0/80} = 3460$ $R_t = 15\exp\{3460(\frac{1}{273+t} - \frac{1}{273})\}$ 0°C[32°F] :15kohm 10°C[50°F] :9.7kohm 20°C[68°F] :6.4kohm 25°C[77°F] :5.3kohm 30°C[86°F] :4.3kohm 40°C[104°F] :3.1kohm	Resistance check
	TH6 (Outdoor temperature)		1. Detects outdoor air temperature 2. Controls fan operation		
	TH7 TH8		Controls LEV1 based on TH5, TH7, and TH8 data.		
	THHS Inverter heat sink temperature	Heat sink	Controls inverter cooling fan based on THHS temperature	$R_{50} = 17k\Omega$ $R_{25/120} = 4170$ $R_t = 17\exp\{4170(\frac{1}{273+t} - \frac{1}{323})\}$ 0°C[32°F] :181kohm 10°C[50°F] :105kohm 20°C[68°F] :64kohm 25°C[77°F] :50kohm 30°C[86°F] :40kohm 40°C[104°F] :26kohm	
Solenoid valve	SV1 Discharge-suction bypass		1. High/low pressure bypass at start-up and stopping, and capacity control during low-load operation 2. High-pressure-rise prevention	AC208/230V Open while being powered/ closed while not being powered	Continuity check with a tester
	SV3 Discharge-suction bypass	P168-P234 models only	Provides compressor protection while compressor No. 2 is stopped		
	SV5b Heat exchanger capacity control	P126-P234 models only	Controls outdoor unit heat exchanger capacity	AC208/230V Closed while being powered/ open while not being powered	

Part name	Symbols (functions)	Notes	Usage	Specifications	Check method
Linear expansion valve (LEV)	LEV (SC coil)		Adjusts the amount of bypass flow from the liquid pipe on the outdoor unit during cooling	DC12V Opening of a valve driven by a stepping motor 0-480 pulses (direct driven type)	Same as indoor LEV The resistance value differs from that of the indoor LEV. (Refer to the section "LEV Troubleshooting.")
Heater	CH11 CH12 Crankcase heater	TH12 is available only on P168-P234 models	Heats the refrigerant in the compressor	Cord heater AC208/230V CH11, CH12: 928ohm 57W (230V)	Resistance check
4-way valve	21S4a		Changeover between heating and cooling	AC208/230V Dead: cooling cycle Live: heating cycle	Continuity check with a tester
	21S4b	P126-P234 models only	1. Changeover between heating and cooling 2. Controls outdoor unit heat exchanger capacity	AC208/230V Dead: cooling cycle Outdoor unit heat exchanger capacity at 100% Live: heating cycle Outdoor unit heat exchanger capacity at 50% or heating cycle	

(2) PURY

Part name	Symbols (functions)	Notes	Usage	Specifications	Check method
Compressor	MC1 (Comp1)		Adjusts the amount of circulating refrigerant by adjusting the operating frequency based on the operating pressure data	Low-pressure shell scroll compressor Wirewound resistance 10°C [50°F] : 0.155ohm 20°C [68°F] : 0.161ohm 30°C [86°F] : 0.167ohm	
	MC2 (Comp2)	P168-P234 models only	Operates to secure a constant amount of circulating refrigerant when the load exceeds comp1's capacity	Low-pressure shell scroll compressor Wirewound resistance 10°C [50°F] : 0.467ohm 20°C [68°F] : 0.486ohm 30°C[86°F] : 0.505ohm	
High pressure sensor	63HS		1. Detects high pressure 2. Regulates frequency and provides high-pressure protection	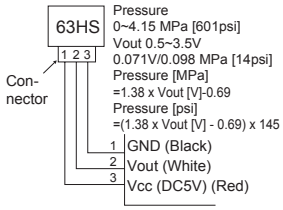	
Low pressure sensor	63LS		1. Detects low pressure 2. Provides low-pressure protection	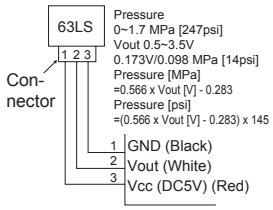	
Pressure switch	63H1 63H2	63H2 is available only on P168-P234 models	1. Detects high pressure 2. Provides high-pressure protection	4.15MPa[601psi] OFF setting	

Part name	Symbols (functions)	Notes	Usage	Specifications	Check method
Thermistor	TH11 TH12 (Discharge)	TH12 is available only on P168-P234 models	1. Detects discharge air temperature 2. Provides high-pressure protection 0°C[32°F] : 698kohm 10°C[50°F] : 413kohm 20°C[68°F] : 250kohm 30°C[86°F] : 160kohm 40°C [104°F] :104kohm 50°C[122°F] : 70kohm 60°C[140°F] : 48kohm 70°C[158°F] : 34kohm 80°C[176°F] : 24kohm 90°C[194°F] : 17.5kohm 100°C[212°F] :13.0kohm 110°C[230°F] : 9.8kohm	$R_{120} = 7.465k\Omega$ $R_{25/120} = 4057$ $R_t = 7.465\exp\{4057(\frac{1}{273+t} - \frac{1}{393})\}$	Resistance check
	TH5 (Pipe temperature)		Controls defrosting during heating operation	$R_0 = 15k\Omega$ $R_{0/80} = 3460$ $R_t = 15\exp\{3460\ (\frac{1}{273+t} - \frac{1}{273})\}$ 0°C[32°F] : 15kohm 10°C[50°F] :9.7kohm 20°C[68°F] :6.4kohm 25°C[77°F] :5.3kohm 30°C[86°F] :4.3kohm 40°C [104°F]:3.1kohm	Resistance check
	TH6 (Outdoor temperature)		1. Detects outdoor air temperature 2. Controls fan operation		
	TH7 (Pipe temperature)		Controls defrosting during heating operation		
	THHS Inverter heat sink temperature	Heat sink	Controls inverter cooling fan based on THHS temperature	$R_{50} = 17k\Omega$ $R_{25/120} = 4170$ $R_t = 17\exp\{4170\ (\frac{1}{273+t} - \frac{1}{323})\}$ 0°C[32°F] : 181kohm 10°C[50°F] :105kohm 20°C[68°F] : 64kohm 25°C[77°F] : 50kohm 30°C[86°F] : 40kohm 40°C [104°F]: 26kohm	

Part name	Symbols (functions)	Notes	Usage	Specifications	Check method
Solenoid valve	SV1 Discharge-suction bypass		1. High/low pressure bypass at start-up and stopping, and capacity control during low-load operation 2. High-pressure-rise prevention	AC208/230V Open while being powered/ closed while not being powered	Continuity check with a tester
	SV2 Discharge-suction bypass		Prevents low pressure drop		
	SV3 Discharge-suction bypass	P168-P234 models only	Provides compressor protection while compressor No. 2 is stopped.		
	SV4a-SV4d Heat exchanger capacity control		Controls outdoor unit heat exchanger capacity	AC208/230V Closed while being powered/ open while not being powered	
	SV5a-SV5b Heat exchanger capacity control	P168-P234 models only			
Heater	CH11 CH12 Crankcase heater	TH12 is available only on P168-P234 models	Heats the refrigerant in the compressor	Cord heater AC208/230V CH11, CH12: 928ohm 57W (230V)	Resistance check
4-way valve	21S4a		Changeover between heating and cooling	AC208/230V Dead: cooling cycle Live: heating cycle	Continuity check with a tester
	21S4b	P126-P234 models only	Changeover between heating and cooling	AC208/230V Dead: cooling cycle Live: heating cycle	

2. Indoor unit

Part name	Symbols (functions)	Notes	Usage	Specifications	Check method
Linear expansion valve (LEV)	LEV		1. Adjusts superheat at the heat exchanger outlet of the indoor unit during cooling 2. Adjusts subcool at the heat exchanger outlet of the indoor unit during cooling	DC12V Opening of a valve driven by a stepping motor 0-(1400) pulses	Refer to the section " Ⅸ [4] -6-LEV". Continuity between white, red, and orange. Continuity between yellow, brown, and blue. 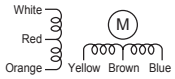
Thermistor	TH1 (Suction air temperature)		Indoor unit control (Thermo)	$R_0 = 15k\Omega$ $R_{0/80} = 3460$ $R_t = 15\exp\{3460\,(\frac{1}{273+t} - \frac{1}{273})\}$ 0°C[32°F] : 15kohm 10°C[50°F] :9.7kohm 20°C[68°F] :6.4kohm 25°C[77°F] :5.3kohm 30°C[86°F] :4.3kohm 40°C[104°F] :3.1kohm	Resistance check
	TH2 (Pipe temperature)		1. Indoor unit control (Freeze prevention, Pre-heating stand-by) 2. LEV control during heating operation (Subcool detection)		
	TH3 (Gas pipe temperature)		LEV control during cooling operation (Superheat detection)		
	TH4 (Outdoor temperature)		Indoor unit control (Thermo)		
	Temperature sensor (Indoor temperature)		Indoor unit control (Thermo)		

3. BC controller

(1) G type

Part name	Symbols (functions)	Part code	Usage	Specifications	Check method
Pressure sensor	63HS1 (High pressure side)		1. Detects high pressure 2. LEV control	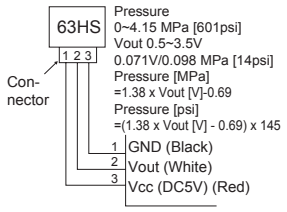	
	63HS3 (Intermediate pressure)		1. Detects intermediate pressure 2. LEV control		
Thermistor	TH11 (Liquid inlet temperature)		LEV control (Liquid level control)	$R_0 = 15k\Omega$ $R_{0/80} = 3460$ $R_t = 15\exp\{3460\,(\frac{1}{273+t} - \frac{1}{273})\}$ 0°C[32°F] : 15kohm 10°C[50°F] :9.7kohm 20°C[68°F] :6.4kohm 25°C[77°F] :5.3kohm 30°C[86°F] :4.3kohm 40°C[104°F] :3.1kohm	
	TH12 (Bypass outlet temperature)		LEV control (Superheat)		
	TH15 (Bypass inlet temperature)		LEV control (Superheat)		
	TH16 (Liquid refrigerant temperature)		LEV control (Subcool)		
Solenoid valve	SVM1		Opens during cooling and defrost modes	AC208/230V Open while being powered/ closed while not being powered	Continuity check with a tester
	SV ■ A		Provides refrigerant to indoor unit in cooling operation		
	SV ■ B		Provides refrigerant to indoor unit in heating operation		
	SV ■ C		Provides refrigerant to indoor unit in cooling operation		
LEV	LEV1		1. Liquid level control 2. Pressure differential control	DC12V Opening of a valve driven by a stepping motor 0-2000 pulses	Same as indoor LEV
	LEV3		1. Liquid level control 2. Pressure differential control		

(2) GA type

Part name	Symbols (functions)	Part code	Usage	Specifications	Check method
Pressure sensor	63HS1 (High pressure side)		1. Detects high pressure 2. LEV control	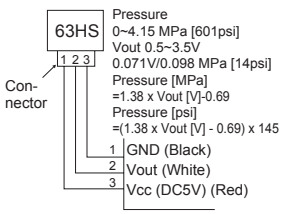	
	63HS3 (Intermediate pressure)		1. Detects intermediate pressure 2. LEV control		
Thermistor	TH11 (Liquid inlet temperature)		LEV control (Liquid level control)	$R_0 = 15k\Omega$ $R_{0/80} = 3460$ $R_t = 15\exp\{3460\left(\frac{1}{273+t} - \frac{1}{273}\right)\}$ 0°C[32°F] : 15kohm 10°C[50°F] :9.7kohm 20°C[68°F] :6.4kohm 25°C[77°F] :5.3kohm 30°C[86°F] :4.3kohm 40°C[104°F] :3.1kohm	
	TH12 (Bypass outlet temperature)		LEV control (Superheat)		
	TH15 (Bypass inlet temperature)		LEV control (Superheat)		
	TH16 (Liquid refrigerant temperature)		LEV control (Subcool)		
Solenoid valve	SVM1		Opens during cooling and defrost modes	AC208/230V Open while being powered/ closed while not being powered	Continuity check with a tester
	SVM2		Pressure differential control		
	SV ■ A		Provides refrigerant to indoor unit in cooling operation		
	SV ■ B		Provides refrigerant to indoor unit in heating operation		
	SV ■ C		Provides refrigerant to indoor unit in cooling operation		
LEV	LEV1 LEV2		1. Liquid level control 2. Pressure differential control	DC12V Opening of a valve driven by a stepping motor 0-2000 pulses	Same as indoor LEV
	LEV3		Subcool control		

(3) GB type

Part name	Symbols (functions)	Part code	Usage	Specifications	Check method
Thermistor	TH22 (Bypass outlet temperature)		LEV control (Superheat)	$R_0 = 15k\Omega$ $R_{0/80} = 3460$ $R_t = 15\exp\{3460\,(\frac{1}{273+t} - \frac{1}{273})\}$ 0°C[32°F] : 15kohm 10°C[50°F] :9.7kohm 20°C[68°F] :6.4kohm 25°C[77°F] :5.3kohm 30°C[86°F] :4.3kohm 40°C[104°F] :3.1kohm	
	TH25 (Bypass inlet temperature)		LEV control (Superheat)		
Solenoid valve	SV ■ A		Provides refrigerant to indoor unit in cooling operation	AC208/230V Open while being powered/ closed while not being powered	Continuity check with a tester
	SV ■ B		Provides refrigerant to indoor unit in heating operation		
	SV ■ C		Provides refrigerant to indoor unit in cooling operation		
LEV	LEV3a		Pressure differential control	DC12V Opening of a valve driven by a stepping motor 0-2000 pulses	Same as indoor LEV

VII Control

[1] Functions and Factory Settings of the Dipswitches 139
[2] Controlling the Outdoor Unit 148
[3] Controlling BC Controller 164
[4] Operation Flow Chart 165

[1] Functions and Factory Settings of the Dipswitches

1. Outdoor unit

(1) Main board

[PUHY]

Switch		Function	Function according to switch setting		Switch setting timing	
			OFF	ON	OFF	ON
SWU	1-2	Unit address setting	Set to 00 or 51-100 with the dial switch		Before power on	
SW1	1-10	For self-diagnosis/operation monitoring	Refer to the LED monitor display on the outdoor unit board.		Anytime after power on	
SW2	1	Centralized control switch	Without connection to the centralized controller	With connection to the centralized controller	Before power on	
	2	Deletion of connection information	Normal control	Deletion	Before power on	
	3	Deletion of error history SW	Storage of IC/OC error history	Deletion of IC/OC error history	Anytime after power on (When switched from OFF to ON)	
	4	Refrigerant amount adjustment	Normal control	Refrigerant amount adjustment mode	Anytime after power on (Will be disabled 2 hours after compressor start up except during initial start up mode)	
	5	-	-	-	-	
	6	-	-	-	-	
	7	Forced defrost	Normal control	Forced defrost starts	10 minutes after compressor start-up	Anytime after power on (When switched from OFF to ON)
	8	Defrost timer setting	50 minutes	90 minutes	Anytime after power on (When switched from OFF to ON)	
	9	-	-	-	-	
	10	-	-	-	-	
SW3	1	Test run mode: enabled/disabled	SW3-2 disabled	SW3-2 enabled	Anytime after power on	
	2	Test run mode: ON/OFF	Stops all ICs	Sends a test-run signal to all IC	After power on and when SW3-1 is on.	
	3	Defrost start temperature	-10°C [14°F] (-8 °C [18°F] for 126 model units and above)	-7°C [19°F] (-5 °C [23°F] for 126 model units and above)	Anytime after power on	
	4	Defrost end temperature	10°C [50°F] (7°C [45°F] for 126 model units and above)	15°C [59°F] (12°C [54°F] for 126 model units and above)	Anytime after power on (except during defrost operation)	
	5	-	-	-	-	
	6	Pump down operation	Normal control	Pump down operation	After power on and while compressor is stopped	
	7	Target condensing temperature on the heating mode Tcm	49°C [120°F]	53°C [127°F]	Anytime after power on	
	8	-	-	-	-	
	9	Unit model selection	Refer to the next page		Before power on	
	10	-	-	-	-	

Note: All are set to OFF at factory shipment. Unless otherwise specified, set the switch to OFF where indicated by "-," which may be set to a certain setting for a reason.

Switch		Function	Function according to switch setting		Switch setting timing	
			OFF	ON	OFF	ON
SW4	1	-	-	-	-	
	2	-	-	-	-	
	3	-	-	-	-	
	4	Emergency operation enabled/disabled	Enabled	Disabled	Anytime after power on	
	5	-	-	-	-	
	6	-	-	-	-	
	7	NIGHT MODE/Step DEMAND mode	NIGHT MODE	Step DEMAND	Before power on	
	8	-	-	-	-	
	9	-	-	-	-	
	10	-	-	-	-	
SW5	1	Unit model selection	Refer to the next page		Before power on	
	2	Heating backup	Disabled	Enabled	Anytime after power on	
	3	LED Display	"°C" "kg/cm^{2}G"	"°F" "psi"	When switching on the power	
	4	-	-	-	-	
	5	-	-	-	-	
	6	-	-	-	-	
	7	-	-	-	-	
	8	-	-	-	-	
	9	-	-	-	-	
	10	-	-	-	-	

Note: All are set to OFF at factory shipment. Unless otherwise specified, set the switch to OFF where indicated by "-," which may be set to a certain setting for a reason.

DIP SW 3-9	DIP SW 5-1	
	OFF	ON
OFF	Standard specification	Standard specification
ON	High-static pressure (60 Pa [0.240in.WG]) specification	High-static pressure (30 Pa [0.120in.WG]) specification

[PURY]

Switch		Function	Function according to switch setting		Switch setting timing	
			OFF	ON	OFF	ON
SWU	1-2	Unit address setting	Set to 00 or 51-100 with the dial switch		Before power on	
SW1	1-10	For self-diagnosis/operation monitoring	Refer to the LED monitor display on the outdoor unit board.		Anytime after power on	
SW2	1	Centralized control switch	Without connection to the centralized controller	With connection to the centralized controller	Before power on	
	2	Deletion of connection information	Normal control	Deletion	Before power on	
	3	Deletion of error history SW	Storage of IC/OC error history	Deletion of IC/OC error history	Anytime after power on (When switched from OFF to ON)	
	4	Refrigerant amount adjustment	Normal control	Refrigerant amount adjustment mode	Anytime after power on (Will be disabled 2 hours after compressor start up except during initial start up mode)	
	5	-	-	-	-	
	6	-	-	-	-	
	7	Forced defrost	Normal control	Forced defrost starts	10 minutes after compressor start-up	Anytime after power on (When switched from OFF to ON)
	8	Defrost timer setting	50 minutes	90 minutes	Anytime after power on (When switched from OFF to ON)	
	9	-	-	-	-	
	10	-	-	-	-	
SW3	1	Test run mode: enabled/disabled	SW3-2 disabled	SW3-2 enabled	Anytime after power on	
	2	Test run mode: ON/OFF	Stops all ICs	Sends a test-run signal to all IC	After power on and when SW3-1 is on	
	3	Defrost start temperature	-10°C [14°F] (-8 °C [18°F] for 126 model units and above)	-7°C [19°F] (-5 °C [23°F] for 126 model units and above)	Anytime after power on	
	4	Defrost end temperature	10°C [50°F] (15°C [59°F] for 168 model units and above)	15°C [59°F] (20°C [68°F] for 168 model units and above)	Anytime after power on (except during defrost operation)	
	5	-	-	-	-	
	6	Pump down operation	Normal control	Pump down operation	After power on and while compressor is stopped	
	7	Target condensing temperature on the heating mode Tcm	49°C [120°F]	53°C [127°F]	Anytime after power on	
	8	-	-	-	-	
	9	Unit model selection	Refer to the next page.		Before power on	
	10	-	-	-	-	

Note: All are set to OFF at factory shipment. Unless otherwise specified, set the switch to OFF where indicated by "-," which may be set to a certain setting for a reason.

Switch		Function	Function according to switch setting		Switch setting timing	
			OFF	ON	OFF	ON
SW4	1	-	-	-	-	
	2	-	-	-	-	
	3	-	-	-	-	
	4	Emergency operation enabled/disabled	Enabled	Disabled	Anytime after power on	
	5	-	-	-	-	
	6	-	-	-	-	
	7	NIGHT MODE/Step DEMAND mode	NIGHT MODE	Step DEMAND	Before power on	
	8	-	-	-	-	
	9	-	-	-	-	
	10	-	-	-	-	
SW5	1	Unit model selection	Refer to the next page.		Before power on	
	2	Heating backup	Disabled	Enabled	Anytime after power on	
	3	LED Display	"°C" "kg/cm^{2}G"	"°F" "psi"	When switching on the power	
	4	-	-	-	-	
	5	-	-	-	-	
	6	-	-	-	-	
	7	-	-	-	-	
	8	-	-	-	-	
	9	-	-	-	-	
	10	-	-	-	-	

Note: All are set to OFF at factory shipment. Unless otherwise specified, set the switch to OFF where indicated by "-," which may be set to a certain setting for a reason.

DIP SW 3-9	DIP SW 5-1	
	OFF	ON
OFF	Standard specification	Standard specification
ON	High-static pressure (60 Pa [0.240in.WG]) specification	High-static pressure (30 Pa [0.120in.WG]) specification

(2) Compressor INV board
[PUHY/PURY]

Switch		Function	Function according to switch setting		Switch setting timing	
			OFF	ON	OFF	ON
SW1	1	Enabling/disabling the following error detection functions; ACCT or DCCT sensor circuit error (530X Detail No. 115, 116) ACCT or DCCT sensor failure (530X Detail No.117,118) IPM open/Disconnected CNCT2 (530X Detail No. 119) Detection of erroneous wiring (530X Detail No.120)	Error detec-tion enabled	Error detec-tion disabled	Anytime after power on	
	2	-	-	-	-	-
	3	-	-	-	-	-
	4	-	-	-	-	-
SW2	1	Inverter address	0	1	Always leave it to ON	
	2	-	-	-	-	-
	3	-	-	-	-	-
	4	-	-	-	-	-

Note1 Except for SW2-1, all are set to OFF at factory shipment. Unless otherwise specified, set the switch to OFF where indicated by "-," which may be set to a certain setting for a reason.
Note2 Leave SW1-1 to OFF during normal operation. If it is set to ON, errors cannot be detected and the unit may be damaged.

(3) FAN INV board
[PUHY/PURY]

Switch		Function	Function according to switch setting		Switch setting timing	
			OFF	ON	OFF	ON
SW2	1	Inverter address	0	5	Always leave it to ON	
	2	-	-	-	-	-
	3	-	-	-	-	-
	4	-	-	-	-	-

Note: Except for SW2-1, all are set to OFF at factory shipment. Unless otherwise specified, set the switch to OFF where indicated by "-," which may be set to a certain setting for a reason.

2. Function of the switch (Indoor unit)

(1) Dipswitches

[SW1,3]

Switch		Function	Function according to switch setting		Switch setting timing		Notes
			OFF	ON	OFF	ON	
SW1	1	Room temperature detection position	Indoor unit inlet	Built-in sensor on the remote controller	While the unit is stopped (Remote controller OFF)		Set to ON (built-in sensor on the remote controller) on All Fresh (PEFY-NMHU-E-F) model units
	2	Clogged filter detection	Not available	Available			
	3	Filter check reminder time setting	100h	2500h			
	4	Outside air intake	Disabled	Enabled			Always set to OFF on PKFY-NAMU model units
	5	Remote display option	Fan output	Thermo-ON signal			
	6	Humidifier control	During heating operation	Always on while in the heating mode			
	7	Fan speed setting for Heating Thermo-OFF	Very Low	Low			
	8	Fan speed setting for Heating Thermo-OFF	According to the SW1-7 setting	Preset speed			
		-	-	-			Applicable to All Fresh model units (PEFY-NMHU-E-F) only
	9	Self-recovery after power failure	Disabled	Valid			
	10	Power source start-stop	Disabled	Enabled			
SW3	1	Unit model selection	Heat pump	Cooling only			
	2	Louver	Not available	Available			
	3	Vane	Not available	Available			
	4	Vane swing function	Not available	Available			Always set to OFF on PKFY-NAMU model units
	5	-	-	-			
	6	Vane angle limit setting for cooling operation	Downblow B,C	Horizontal			Always set to Downblow B or C on PKFY-NAMU model units
		Initial vane position	Enabled	Disabled			PLFY-NLMU model only
	7	-	-	-			
	8	Heating 4-deg up	Enabled	Disabled			Set to OFF on floor-standing (PFFY) type units

Note 1. Settings in the shaded areas are factory settings. Refer to the table below for the factory setting of the switches whose factory settings are not indicated by the shaded cells.

Note 2. On a system with a G-50 connection, set Dip SW 1-9 and 1-10 to ON to control input/output using the PLC for general equipment. With these settings made, the power start/stop function will be disabled. Set Dip SW 1-5 to ON to use the auto-recovery after power failure function.

Model		PLFY	PMFY	PDFY	PEFY			PCFY	PKFY			PFFY
		-NAMU -NLMU	-NBMU	-NMU	-NMLU	-NMHU	-NMHU-F	-NGMU	-NAMU	-NGMU	-NFMU	-NEMU -NRMU
SW1	3	ON	OFF	ON	OFF	ON	ON	ON	OFF	OFF	OFF	OFF
	6	ON	OFF	ON	ON	ON	ON	OFF	OFF	OFF	OFF	ON
	7	OFF	OFF	OFF	ON	ON	OFF	OFF	OFF	OFF	OFF	OFF
SW3	2	OFF	OFF	OFF	OFF	OFF	OFF	OFF	OFF	OFF	OFF	OFF
	3	ON	ON	OFF	OFF	OFF	OFF	ON	ON	ON	ON	OFF
	4	ON	ON	OFF	OFF	OFF	OFF	ON	OFF	ON	ON	OFF

Note 3. Setting timing for the DIP SW 1, 2, 3, and 4 is when the unit is stopped (remote controller OFF). It is not necessary to power reset.

Note 4. When both SW1-7 and 1-8 are set to ON, the fan stops while the unit is under the Heating Thermo-OFF conditions.

[SW2]

Model	P06	P08	P12	P15	P18	P24
Capacity (model) code	4	5	6	8	10	13
SW2 setting						

Model	P27	P30	P36	P48	P54	P72	P96
Capacity (model) code	14	16	20	25	28	40	50
SW2 setting							

[SW4]

Model		Compatible circuit board Service Parts No.	SW4				
			1	2	3	4	5
PLFY	P06-18NLMU-E	R61 Y70 281	OFF	ON	OFF	ON	OFF
	P12-36NAMU-E	T7W E42 310	OFF	ON	ON	OFF	OFF
PMFY	P06-15NBMU-E	T7W E43 310	ON	OFF	ON	OFF	ON
PDFY	P06-30NMU-E	R61 Y71 281	ON	OFF	ON	OFF	-
	P36,48NMU-E	R61 Y70 281	OFF	OFF	ON	OFF	OFF
PEFY	P06-12NMLU-E	R61 Y72 281	OFF	ON	ON	OFF	OFF
	P15-54NMHU-E	R61 Y72 281	OFF	OFF	OFF	OFF	OFF
	P72,96NMHU-E	R61 Y72 281	ON	OFF	OFF	OFF	OFF
	P30-96NMHU-E-F	R61 Y72 281	ON	ON	OFF	OFF	OFF
PCFY	P15-36NGMU-E	T7W E42 310	OFF	ON	OFF	ON	OFF
PKFY	P06,08NAMU-E	T7W E44 310	-	-	-	-	-
	P12,15NGMU-E	T7W E42 310	ON	ON	OFF	ON	OFF
	P18-30NFMU-E	T7W E42 310	ON	OFF	ON	ON	OFF
PFFY	P06-24NEMU-E	R61 Y72 281	OFF	OFF	OFF	OFF	OFF
	P06-24NRMU-E	R61 Y72 281	OFF	OFF	OFF	OFF	OFF

(2) Slide switches

<table>
<tr><th colspan="2">Switch</th><th>Function</th><th>Function according to switch setting</th><th>Switch setting timing</th></tr>
<tr><td>SWA</td><td>1-3</td><td>Ceiling height setting</td><td>(PCFY-NGMU)
3 □
2 ■
1 □
<table>
<tr><th></th><th>Ceiling height</th></tr>
<tr><td>3 (High ceiling)</td><td>3.5m[11.45ft]</td></tr>
<tr><td>2 (Standard-height ceiling)</td><td>2.8m[9.1ft]</td></tr>
<tr><td>1 (Low ceiling)</td><td>2.3m[7.5ft]</td></tr>
</table></td><td>Anytime after power on</td></tr>
<tr><td>SWA</td><td>1-3</td><td rowspan="2">Ceiling height setting
Number of unit setting</td><td rowspan="2">(PLFY-NAMU)
SWA: 3 □, 2 ■, 1 ■
SWB: 2 □, 3 □, 4 ■
<table>
<tr><th></th><th colspan="3">P12-24</th><th colspan="3">P30,36</th></tr>
<tr><th></th><th>1</th><th>2</th><th>3</th><th>1</th><th>2</th><th>3</th></tr>
<tr><td>2 (2 directions)</td><td>3.3 m [10.8 ft]</td><td>3.5 m [11.5 ft]</td><td>-</td><td>4.0 m[13.1 ft]</td><td>4.2 m[13.8 ft]</td><td>-</td></tr>
<tr><td>3 (3 directions)</td><td>3.0 m [9.8 ft]</td><td>3.3 m [10.8 ft]</td><td>3.5 m [11.5 ft]</td><td>3.6 m[11.8 ft]</td><td>4.0 m[13.1 ft]</td><td>4.2 m[13.8 ft]</td></tr>
<tr><td>4 (4 directions)</td><td>2.7 m [8.9f t]</td><td>3.0 m [9.8 ft]</td><td>3.5 m [11.5 ft]</td><td>3.2 m[10.5 ft]</td><td>3.6 m[11.8 ft]</td><td>4.2 m[13.8 ft]</td></tr>
</table></td><td rowspan="2">Anytime after power on</td></tr>
<tr><td>SWB</td><td>2-4</td></tr>
<tr><td>SWA</td><td>1-3</td><td rowspan="2">Static pressure setting
Option setting</td><td rowspan="2">
<table>
<tr><th>MODELS</th><th colspan="2">P06-12</th></tr>
<tr><th>VOLT</th><th>208</th><th>230</th></tr>
<tr><td>SWA ■ 3 2 1</td><td>0.321in.WG (80Pa)</td><td>0.401in.WG (100Pa)</td></tr>
<tr><td>SWA 3 ■ 2 1</td><td>0.200in.WG (50Pa)</td><td>0.240in.WG (60Pa)</td></tr>
<tr><td>SWA 3 2 ■ 1</td><td>0.120in.WG (30Pa)</td><td>0.160in.WG (40Pa)</td></tr>
</table>
<table>
<tr><th>MODELS</th><th colspan="2">P15-24</th></tr>
<tr><th>VOLT</th><th>208</th><th>230</th></tr>
<tr><td>SWA ■ 3 2 1</td><td>0.200in.WG (50Pa)</td><td>0.240in.WG (60Pa)</td></tr>
<tr><td>SWA 3 ■ 2 1</td><td>0.321in.WG (80Pa)</td><td>0.401in.WG (100Pa)</td></tr>
<tr><td>SWA 3 2 ■ 1</td><td>0.120in.WG (30Pa)</td><td>0.160in.WG (40Pa)</td></tr>
</table>
<table>
<tr><th>MODELS</th><th colspan="2">P27</th></tr>
<tr><th>VOLT</th><th>208</th><th>230</th></tr>
<tr><td>SWA ■ 3 2 1</td><td>0.120in.WG (30Pa)</td><td>0.160in.WG (40Pa)</td></tr>
<tr><td>SWA 3 ■ 2 1</td><td>0.200in.WG (50Pa) / 0.321in.WG (80Pa)</td><td>0.240in.WG (60Pa) / 0.401in.WG (100Pa)</td></tr>
<tr><td>SWA 3 2 ■ 1</td><td>-</td><td>-</td></tr>
</table>
<table>
<tr><th>MODELS</th><th colspan="2">P30</th></tr>
<tr><th>VOLT</th><th>208</th><th>230</th></tr>
<tr><td>SWA ■ 3 2 1</td><td>-</td><td>-</td></tr>
<tr><td>SWA 3 ■ 2 1</td><td>0.200in.WG (50Pa) / 0.401in.WG (100Pa)</td><td>0.240in.WG (60Pa) / 0.461in.WG (115Pa)</td></tr>
<tr><td>SWA 3 2 ■ 1</td><td>0.120in.WG (30Pa)</td><td>0.160in.WG (40Pa)</td></tr>
</table>
<table>
<tr><th>MODELS</th><th colspan="2">P06-24</th></tr>
<tr><th>VOLT</th><th>208</th><th>230</th></tr>
<tr><td>SWC Option □ Standard ■</td><td>0.120in.WG (30Pa)
0.200in.WG (50Pa)
0.321in.WG (60Pa)</td><td>0.160in.WG (40Pa)
0.240in.WG (60Pa)
0.461in.WG (115Pa)</td></tr>
</table>
<table>
<tr><th>MODELS</th><th colspan="2">P27</th><th colspan="2">P30</th></tr>
<tr><th>VOLT</th><th>208</th><th>230</th><th>208</th><th>230</th></tr>
<tr><td>SWC Option □ Standard ■</td><td>0.120in.WG (30Pa)
0.200in.WG (50Pa)</td><td>0.160in.WG (40Pa)
0.240in.WG (60Pa)</td><td>0.120in.WG (30Pa)
0.200in.WG (50Pa)</td><td>0.160in.WG (40Pa)
0.240in.WG (60Pa)</td></tr>
<tr><td>SWC Option ■ Standard □</td><td>0.321in.WG (80Pa)</td><td>0.401in.WG (100Pa)</td><td>0.401in.WG (100Pa)</td><td>0.461in.WG (115Pa)</td></tr>
</table></td><td rowspan="2">Anytime after power on</td></tr>
<tr><td>SWC</td><td>Standard, Option</td></tr>
<tr><td>SWC</td><td>Standard, Option</td><td>Optional parts support</td><td>(PLFY-NAMU,-NLMU)
(PCFY-NGMU)
Option □
Standard ■
*Set this switch to Option to prevent a drop in the airflow rate when using the optional high-efficiency element.</td><td>Anytime after power on</td></tr>
</table>

(3) Address switch

Actual indoor unit address setting varies in different systems. Refer to the installation manual for the outdoor unit for details on how to make the address setting.

Each address is set with a combination of the settings for the 10's digit and 1's digit.

(Example)

When setting the address to "3", set the 1's digit to 3, and the 10's digit to 0.

When setting the address to "25", set the 1's digit to 5, and the 10's digit to 2.

3. Function of the switch <Remote controller>

ME remote controller (PAR-F27MEA-US)

Set the address of the remote controller with the rotary switch.

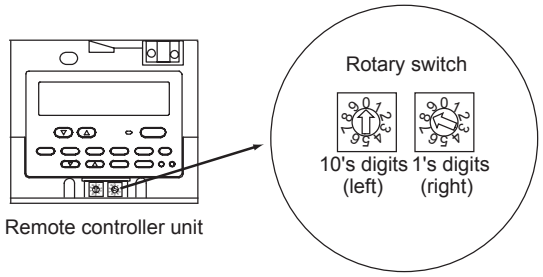

Example: In case of address 108

	Address setting range	Setting method
Main remote controller	101-150	Add 100 to the smallest address of all the indoor units in the same group.
Sub remote controller	151-200	Add 150 to the smallest address of all the indoor units in the same group.

Setting of rotary switch	Address No.
01-99*1	101-199 with the 100's digit automatically being set to 1*2
00	200

*1. At factory shipment, the rotary switch is set to 01.

*2. The address range that can be set with the ME remote controller is between 101 and 200. When the dials are set to a number between 01 and 99, the 100's digit is automatically set to [1]. When the dials are set to 00, the 100's digit is automatically set to [2].

Note: To set addresses, use a precision slotted screw driver [20 mm [0.8 in] (w)], and do not apply than 19.6N.
The use of any other tool or applying too much load may damage the switch.

4. BC controller (Main board)

Switch		Function	Function according to switch setting		Switch setting timing
			OFF	ON	
SW4	1	Model setting	R410A	-	Always leave it to OFF
	2-8	-	-	-	-
SW5	1-6	-	-	-	-
	7	Model setting	Refer to the table below for details.		Before power on
	8	Model setting	Refer to the table below for details.		Before power on

Model setting

		SW5-8	
		OFF	ON
SW5-7	OFF	G type	
	ON	GA type	GB type

[2] Controlling the Outdoor Unit

-1- Initial Control <PUHY/PURY>

- When the power is turned on, the initial processing of the microcomputer is given top priority.
- During the initial processing, control processing of the operation signal is suspended. The control processing is resumed after the initial processing is completed. Initial processing involves data processing in the microcomputer and initial setting of each of the LEV opening. This process will take up to 2 minutes.
- During the initial processing, the LED monitor on the outdoor unit's main board displays S/W version -> refrigerant type -> heat pump -> cooling only and capacity -> and communication address in turn every second.

-2- Control at Start-up <PUHY/PURY>

- The upper limit of frequency during the first 3 minutes of the operation is 50 Hz.
- When the power is turned on, normal operation will start after the initial start-up mode (to be described later) has been completed (with a restriction on the frequency).

-3- Bypass Control <PUHY>

Bypass solenoid valves (P72-P144,SV1; P168-P234,SV1,SV3), which bypass the high- and low- pressure sides, perform the following functions.

(1) Bypass solenoid valve (SV1) (ON = Open)

Operation	SV1	
	ON	OFF
At No. 1 compressor start-up or at No. 2 compressor start-up (P168-P234 models only)	ON for 4 minutes.	
After the restoration of thermo or 3 minutes after restart	ON for 2 minutes.	
During cooling or heating operation with the compressor stopped	Always ON. Exception: OFF when HPS-LPS is 0.2 MPa [29 psi] or less	
After the operation has stopped	ON for 3 minutes. Exception: OFF when HPS-LPS is 0.2 MPa [29 psi] or less	
During defrost operation (See *1 in the figure below.)	Always ON	
During oil-recovery operation	Always OFF during cooling operation and always ON during heating operation when running an oil-recovery operation after running a continuous operation at low frequency.	
During an operation with the compressor running at 30 Hz (After 3 minutes have passed since start-up)	When low pressure (LPS) drops below 0.23 MPa [33 psi].	When low pressure (LPS) exceeds 0.38 MPa [55 psi].
When high pressure (Pd) rises	When Pd exceeds 3.77 MPa [547 psi]	When Pd is or below 3.43 MPa [497 psi] and 30 seconds have passed

[Example of an SV1 operation]

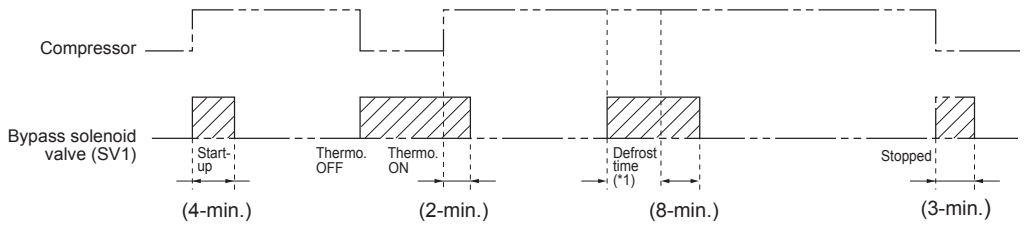

(2) Bypass valve (SV3, P168-P234 models only) (ON = Open)
The opening of SV3 is controlled by the operating state of No.1 and No.2 compressors.

No.1 Compressor	No.2 Compressor	SV3
Stopped	Stopped	OFF
In operation	Stopped	ON
In operation	In operation	OFF

-4- Bypass Control <PURY>

Bypass solenoid valves (P72-P144,SV1, SV2; P168-P234,SV1, SV2, SV3), which bypass the high- and low- pressure sides, perform the following functions.

(1) Bypass solenoid valve (SV1) (ON = Open)

Operation	SV1	
	ON	OFF
At No. 1 compressor start-up or at No. 2 compressor start-up (P168-P234 models only)	ON for 4 minutes.	
After going from Thermo-OFF condition to Thermo-ON condition or after 3-minutes re-start prevention	ON for 2 minutes.	
During cooling or heating operation with the compressor stopped	Always ON. Exception: OFF when HPS-LPS is 0.2 MPa [29 psi] or less	
After the operation has stopped	ON for 3 minutes. Exception: OFF when HPS-LPS is 0.2 MPa [29 psi] or less	
During defrost operation (See *1 in the figure below.)	Always ON	
During oil-recovery operation	Always OFF during cooling operation and always ON during heating operation when running an oil-recovery operation after running a continuous operation at low frequency.	
During an operation with the compressor running at 30 Hz (After 3 minutes have passed since start-up)	When low pressure (LPS) drops below 0.23 MPa [33 psi].	When low pressure (LPS) exceeds 0.38 MPa [55 psi].
When high pressure (Pd) rises	When Pd exceeds 3.77 MPa [547 psi]	When Pd is or below 3.43 MPa [497 psi] and 30 seconds have passed

[Example of an SV1 operation]

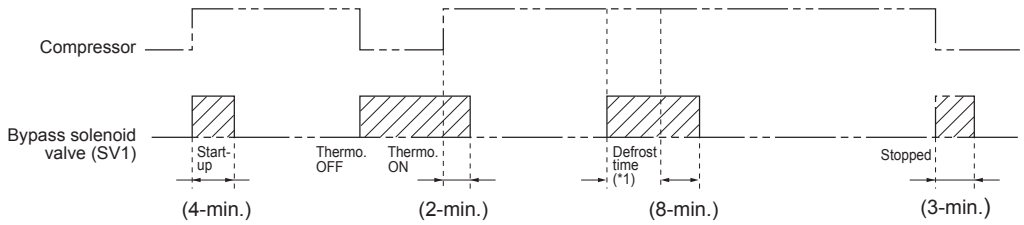

(2) Bypass solenoid valve (SV2) (ON = Open)

Operation	SV2	
	ON	OFF
When low pressure (LPS) drops in heating-only mode or heating-main mode (after 5 minutes since the compressor start-up)	When low pressure (LPS) drops below 0.25 MPa [36 psi].	When low pressure (LPS) exceeds 0.39 MPa [57 psi].

(3) Bypass valve (SV3, P168-P234 models only) (ON = Open)
The opening of SV3 depends on the operating state of No.1 and No.2 compressors.

No.1 Compressor	No.2 Compressor	SV3
Stopped	Stopped	OFF
In operation	Stopped	ON
In operation	In operation	OFF

-5- Compressor Frequency Control <PUHY>

- Depending on the capacity required, the frequency of the compressor is controlled to keep constant evaporation temperature (0°C [32°F] = 0.71 MPa [103 psi]) during cooling operation, and condensing temperature (49°C [120°F] = 2.88 MPa [418 psi]) during heating operation.
- The capacity of the P72-P144 is controlled solely by the inverter-driven compressor, and the capacity of P168-P234 is controlled by No.1 compressor (inverter) and No.2 compressor (constant capacity).
- The following table shows the frequency change of the inverter compressor during normal operation.

Model	Frequency/cooling	Frequency/heating	Speed
P72 model	20-53 Hz	20-59 Hz	3 Hz/second
P96 model	20-70 Hz	20-85 Hz	3 Hz/second
P108 model	20-77 Hz	20-98 Hz	3 Hz/second
P126 model	20-89 Hz	20-102 Hz	3 Hz/second
P144 model	20-103 Hz	20-103 Hz	3 Hz/second
P168 model	20-65 Hz	20-73 Hz	3 Hz/second
P192 model	20-78 Hz	20-84 Hz	3 Hz/second
P204 model	20-88 Hz	20-93 Hz	3 Hz/second
P216 model	20-98 Hz	20-105 Hz	3 Hz/second
P234 model	20-107 Hz	20-113 Hz	3 Hz/second

The maximum frequency during heating operation is affected by the outdoor air temperature to a certain extent.

(1) No. 2 compressor operation/stop (P168-P234 models only)

- No.2 compressor changeover from stop to in-operation
  When No.1 compressor does not meet the capacity requirement, No.2 compressor will start its operation.
- No.2 compressor changeover from stop to in-operation
  When an operation of both No.1 and No.2 compressors exceeds the capacity requirement, No.2 compressor will stop its operation.

(2) Pressure limit

The maximum limit of high pressure (Pd) is set for each frequency level. If this limit is exceeded, the frequency will be reduced every 30 seconds.

(3) Discharge temperature limit

The discharge temperature (Td) of the compressor in operation is detected, and if it exceeds the upper limit, the frequency is reduced by 5 Hz.

- Control is performed 30 seconds after compressor start-up and every 30 seconds thereafter.
- Operating temperature is 115°C [239°F] .

(4) Periodic frequency control

Frequency control other than the ones performed at start-up, upon status change, and for protection is called periodic frequency control (convergent control) and is performed in the following manner.

[Periodic control cycle]

Periodic control is performed after the following time has passed

- 30 seconds after either compressor start-up or the completion of defrost operation
- 30 seconds after frequency control based on discharge temperature or pressure limit

[The amount of frequency change]

The amount of frequency change is controlled to approximate the target value based on the evaporation temperature (Te) and condensing temperature (Tc).

-6- Compressor Frequency Control <PURY>

- Depending on the capacity required, the frequency of the compressor is controlled to keep constant evaporation temperature (0°C [32°F] = 0.71 MPa [103 psi]) during cooling operation, and condensing temperature (49°C [120°F] = 2.88 MPa [418 psi]) during heating operation.
- The capacity of the P72-P144 is controlled solely by the inverter-driven compressor, and the capacity of P168-P234 is controlled by No.1 compressor (inverter) and No.2 compressor (constant capacity).
- The following table shows the frequency change of the inverter compressor during normal operation.

Model	Frequency/cooling	Frequency/heating	Speed
P72 model	20-53Hz	20-59 Hz	3 Hz/second
P96 model	20-70 Hz	20-85 Hz	3 Hz/second
P108 model	20-77 Hz	20-98 Hz	3 Hz/second
P126 model	20-89 Hz	20-102 Hz	3 Hz/second
P144 model	20-103 Hz	20-103 Hz	3 Hz/second
P168 model	20-65 Hz	20-73 Hz	3 Hz/second
P192 model	20-78 Hz	20-84 Hz	3 Hz/second
P204 model	20-88 Hz	20-93 Hz	3 Hz/second
P216 model	20-98 Hz	20-105 Hz	3 Hz/second
P234 model	20-107 Hz	20-113 Hz	3 Hz/second

The maximum frequency during heating operation is affected by the outdoor air temperature to a certain extent.

(1) No. 2 compressor operation/stop (P168-P234 models only)

- No.2 compressor changeover from stop to in-operation
  When No.1 compressor does not meet the capacity requirement, No.2 compressor will start its operation.
- No.2 compressor changeover from stop to in-operation
  When an operation of both No.1 and No.2 compressors exceeds the capacity requirement, No.2 compressor will stop its operation.

(2) Pressure limit

The maximum limit of high pressure (Pd) is set for each frequency level. If this limit is exceeded, the frequency will be reduced every 30 seconds.

(3) Discharge temperature limit

The discharge temperature (Td) of the compressor in operation is detected, and if it exceeds the upper limit, the frequency is reduced by 5 Hz.

- Control is performed 30 seconds after compressor start-up and every 30 seconds thereafter.
- Operating temperature is 115°C [239°F].

(4) Periodic frequency control

Frequency control other than the ones performed at start-up, upon status change, and for protection is called periodic frequency control (convergent control) and is performed in the following manner.

[Periodic control cycle]

Periodic control is performed after the following time has passed

- 30 seconds after either compressor start up or the completion of defrost operation
- 30 seconds after frequency control based on discharge temperature or pressure limit

[The amount of frequency change]

The amount of frequency change is controlled to approximate the target value based on the evaporation temperature (Te) and condensing temperature (Tc).

-7- Defrost Operation Control <PUHY>

(1) Starting the defrost operation

- Defrost operation is started when the pipe temperature (TH5) of -10°C [14°F] or below (-8°C [18°F] or below for P126-type and above) has continuously been detected for 3 minutes after the integrated compressor operation time of 50 minutes have passed (90 minutes when the defrost prohibit timer is set to 90 minutes).
- If 10 minutes have passed since compressor start-up or since the completion of defrost operation, forced defrost operation will start by turning on the forced defrost switch (DIP SW2-7).
- Even if the defrost prohibit timer is set to 90 minutes, the actual defrost prohibit time for the next operation will be 50 minutes if defrosting took 12 minutes.

(2) Defrost operation

Compressor frequency	Model	No.1 Compressor	No.2 Compressor
	P72 model	52	-
	P96 model	53	-
	P108 model	65	-
	P126 model	114	-
	P144 model	114	-
	P168 model (50/60 Hz)	70/60	ON (50/60 Hz)
	P192 model (50/60 Hz)	70/60	ON (50/60 Hz)
	P204 model (50/60 Hz)	110/100	ON (50/60 Hz)
	P216 model (50/60 Hz)	110/100	ON (50/60 Hz)
	P234 model (50/60 Hz)	110/100	ON (50/60 Hz)
Outdoor unit fan	Stopped		
SV1	ON		
SV3 (P168-P234 models only)	ON		
21S4a	OFF		
21S4b (P144-P234 models only)	OFF		
SV5b (P144-P234 models only)	OFF		
LEV1	480 pulses		

(3) Stopping the defrost operation

- Defrost operation will stop when 12 minutes have passed since the beginning of defrost operation (15 minutes when the defrost prohibit timer is set to 90 minutes), or when the piping temperature (TH5) of 10°C [50°F] or above has been continuously detected for 2 minutes (TH5 above 7°C [45°F] for 2 minutes for P126 model and above).
- Defrost operation will not stop its operation for 2 minutes once started unless the piping temperature exceeds 25°C [77°F] within 2 minutes, in which case the operation will stop (Above 20°C [68°F] within 2 minutes for P126 model and above).

(4) Problems during defrost operation

- If a problem is detected during defrost operation, the operation will be stopped, and the defrost prohibition time based on the integrated compressor operation time will be set to 20 minutes.

(5) Change in the number of operating indoor units during defrost operation

- Even when there is a change in the number of operating indoor units during defrost operation, the operation will continue, and an adjustment will be made after the completion of the defrost operation.
- Defrost operation will be continued, even if the indoor units stop or under the Thermo-OFF conditions until it has run its course.

-8- Defrost Operation Control <PURY>

(1) Starting the defrost operation

- Defrost operation is started when the pipe temperature (TH5) of -10°C [14°F] or below (-8°C [18°F] or below for P126-type and above) has continuously been detected for 3 minutes after the integrated compressor operation time of 50 minutes have passed (90 minutes when the defrost prohibit timer is set to 90 minutes).
- If 10 minutes have passed since compressor start-up or since the completion of defrost operation, forced defrost operation will start by turning on the forced defrost switch (DIP SW2-7).
- Even if the defrost prohibit timer is set to 90 minutes, the actual defrost prohibit time for the next operation will be 50 minutes if defrosting took 12 minutes.

(2) Defrost operation

Compressor frequency	Model	No.1 Compressor	No.2 Compressor
	P72 model	52	-
	P96 model	65	-
	P108 model	65	-
	P126 model	114	-
	P144 model	114	-
	P168 model (50/60 Hz)	110/100	ON (50/60 Hz)
	P192 model (50/60 Hz)	110/100	ON (50/60 Hz)
	P204 model (50/60 Hz)	110/100	ON (50/60 Hz)
	P216 model (50/60 Hz)	110/100	ON (50/60 Hz)
	P234 model (50/60 Hz)	110/100	ON (50/60 Hz)
Outdoor unit fan	Stopped		
SV1	ON		
SV2	ON		
SV3 (P168-P234 models only)	ON		
21S4a	OFF		
21S4b (P144-P234 models only)	OFF		
BC controller LEV12	G type: 4000, GA type: 6000		
BC controller LEV34	G type: 1000, GA type: 2000		
BC controller LEV3a	60 (Fully open)		
BC controller SVM1	ON		
BC controller SVM2	OFF		

(3) Stopping the defrost operation

- Defrost operation will stop when 12 minutes have passed since the beginning of defrost operation or when the piping temperature (TH5 and TH7) of 10°C [50°F] or above has been continuously detected for 2 min (15°C [59°F] or above for 8 minutes for P168 model and later).

(4) Problems during defrost operation

- If a problem is detected during defrost operation, the operation will be stopped, and the defrost prohibition time based on the integrated compressor operation time will be set to 20 minutes.

(5) Change in the number of operating indoor units during defrost operation

- Even when there is a change in the number of operating indoor units during defrost operation, the operation will continue, and an adjustment will be made after the completion of the defrost operation.
- Defrost operation will be continued, even if the indoor units stop or under the Thermo-OFF conditions until it has run its course.

-9- Refrigerant Recovery Control <PUHY>

Recovery of refrigerant is performed during heating operation to prevent the refrigerant from accumulating inside the unit while it is stopped (unit in fan mode), or inside the indoor unit that is in cooling mode or in heating mode with thermo off. It is also performed during cooling operation to prevent an excessive amount of refrigerant from accumulating in the outdoor heat exchanger.

It is also performed during cooling operation to prevent an excessive amount of refrigerant from accumulating in the outdoor heat exchanger.

(1) During heating operation

[Starting refrigerant recovery mode]

The refrigerant recovery mode in heating starts when all of the following three conditions are met:

- 15 minutes have passed since the completion of previous refrigerant recovery.
- Td > 115°C [239°F]
- Frequencies below 50 Hz

[Refrigerant recovery]

1) Refrigerant is recovered with the LEV on the applicable indoor unit (unit under stopping mode, fan mode, cooling, heating with thermo off) being opened for 30 seconds.

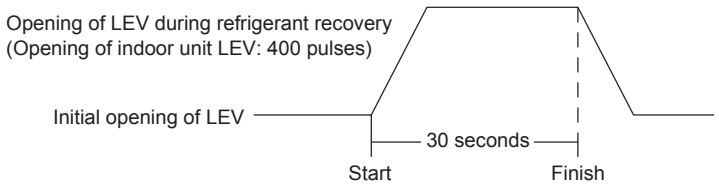

2) Periodic capacity control of the outdoor units and periodic LEV control of the indoor units will be suspended during refrigerant recovery operation; they will be performed after the recovery has been completed.
3) Defrost operation will be suspended until refrigerant recovery has been completed.

(2) During cooling operation

[Starting refrigerant recovery mode]

The refrigerant recovery mode starts when all the following conditions are met

- 30 minutes have passed since the completion of previous refrigerant recovery.
- When the unit keeps running for 3 minutes in a row or more with high discharge temperature
- Td > 105°C [221°F] or
  Pd > 3.43 MPa [497 psi] (35 kg/cm^{2}G) and SC0 > 10 deg°C [18 deg°F]

[Refrigerant recovery]

Increase the opening of LEV1 (Periodic control begins when 30 seconds have elapsed).

-10- Refrigerant Recovery Control <PURY>

Recovery of refrigerant is performed during heating operation to prevent the refrigerant from accumulating inside the unit while it is stopped (unit in fan mode), or inside the indoor unit that is in cooling mode or in heating mode with thermo off. It is also performed during cooling operation to prevent an excessive amount of refrigerant from accumulating in the outdoor heat exchanger.

[Starting refrigerant recovery mode (during cooling only, cooling main, heating only, or heating main operation)]

The refrigerant recovery mode starts when all of the following conditions are met:

1) When 15 minutes have past in heating only or heating main mode or 5 minutes have passed in cooling only or cooling main mode since the completion of previous refrigerant recovery
   - P72-P144: Td > 105°C [221°F]
   - P168-P234: Td1 > 105°C [221°F] or Td2 > 105°C [221°F]
2) When the port is not under 3-minute restart mode

[Refrigerant recovery (during cooling only, cooling main, heating only, or heating main operation)]

1) When the port is under any condition other than heating Thermo-ON
   SV■C at the branch is turned on for 30 seconds. (■ indicates each port No.)
2) The opening of LEV1 and LEV3 is increased.

-11- Capacity Control of Outdoor Fan and Heat Exchanger <PUHY>

(1) Control method

- Depending on the capacity required, the rotation speed of the outdoor unit fan is controlled by the inverter, targeting a constant evaporation temperature of (0°C [32°F]= 0.71 MPa [103 psi]) during cooling operation and constant condensing temperature of (49°C [120°F]= 2.88 MPa [418 psi]) during heating operation.
- The capacity of the heat exchanger on the P126-234 models of outdoors is controlled by the 4-way valve (21S4b) or the solenoid valve (SV5b).

(2) Control

- Outdoor unit fan stops while the compressor is stopped (except in the presence of input from snow sensor).
- The fan operates at full speed for 5 seconds after start-up.
- The outdoor unit fan stops during defrost operation.

(3) Capacity control of outdoor heat exchanger

[P126, P144 models]

Operation mode	Heat exchanger capacity	Inverter control	Notes
Cooling	50%	5-100%	21S4b ON, SV5b ON
	100%	10-100%	21S4b OFF, SV5b OFF
Heating	100%	10-100%	21S4b ON, SV5b OFF
Defrost	100%	0%	21S4b OFF, SV5b OFF

[P168-P234 models]

Operation mode	Heat exchanger capacity	Number of fans	Inverter control	Notes
Cooling	50%	1	5 -100%	21S4b ON SV5b ON
	100%	2	10 -100%	21S4b ON SV5b ON
Heating	100%	2	10 -100%	21S4b OFF SV5b OFF
Defrost	100%	0	0%	21S4b ON SV5b OFF

Notes:

- The unit runs a cooling cycle when 21S4b is not powered and runs a heating cycle when it is powered.
- SV5b is open when it is not powered and is closed when it is powered.
- While the unit is stopped, 21S4b is not powered cooling cycle, and SV5b is open.

-12- Capacity Control of Outdoor Fan and Heat Exchanger <PURY>

(1) Control method

- Depending on the capacity required, the rotation speed of the outdoor unit fan is controlled by the inverter, targeting a constant evaporation temperature of (0°C [32°F]= 0.71 MPa [103 psi]) during cooling operation and constant condensing temperature of (49°C [120°F]= 2.88 MPa [418 psi]) during heating operation.

(2) Control

- Outdoor unit fan stops while the compressor is stopped (except in the presence of input from snow sensor).
- The fan operates at full speed for 5 seconds after start-up.
- The outdoor unit fan stops during defrost operation.

(3) Capacity control of outdoor heat exchanger

Operation mode	Operation pattern	Solenoid valve					
		SV4a	SV4b	SV4c	SV4d	SV5a	SV5b
Cooling only	1	ON	ON	ON	OFF	ON	ON
	2					OFF	OFF
	3	OFF	ON	ON	OFF	OFF	OFF
	4	OFF	ON	OFF	OFF	OFF	OFF
	5	OFF	OFF	ON	OFF	OFF	OFF
	6	OFF	OFF	OFF	OFF	OFF	OFF
Cooling main	1	ON	ON	ON	OFF	ON	ON
	2					OFF	OFF
	3	OFF	ON	ON	OFF	OFF	OFF
	4	OFF	ON	OFF	OFF	OFF	OFF
	5	OFF	OFF	ON	OFF	OFF	OFF
	6	OFF	OFF	OFF	OFF	OFF	OFF
	8	OFF	OFF	OFF	ON	OFF	OFF
Heating only	1	ON	ON	ON	OFF	ON	ON
Heating main	1	ON	ON	ON	OFF	ON	ON
	2	ON	ON	ON	OFF	OFF	OFF
	7	ON	ON	ON	ON	OFF	OFF
Defrost	1	ON	ON	ON	OFF	ON	ON

All solenoid valves are turned off while the unit is stopped.
*SV5a and SV5b are available only on the P168 model and above.

-13- Subcool Coil Control (Linear Expansion Valve <LEV1>) <PUHY>

- The amount of super heat is controlled and kept constant based on the bypass outlet temperature (TH8) of subcool coil every 30 seconds.
- The degree of opening is controlled based on the subcool coil outlet/inlet temperature (TH5, TH7), high pressure (Pd), and discharge temperature. The LEV will be closed (0) during heating operation and when the compressor is stopped, and it will be open during cooling operation with Thermo off.
- The LEV stays open at 480 during defrost operation.

-14- Control at Initial Start-up <PUHY>

- When the unit is started for the first time, it will run the following course of operation.

(1) Flow chart of initial operation mode

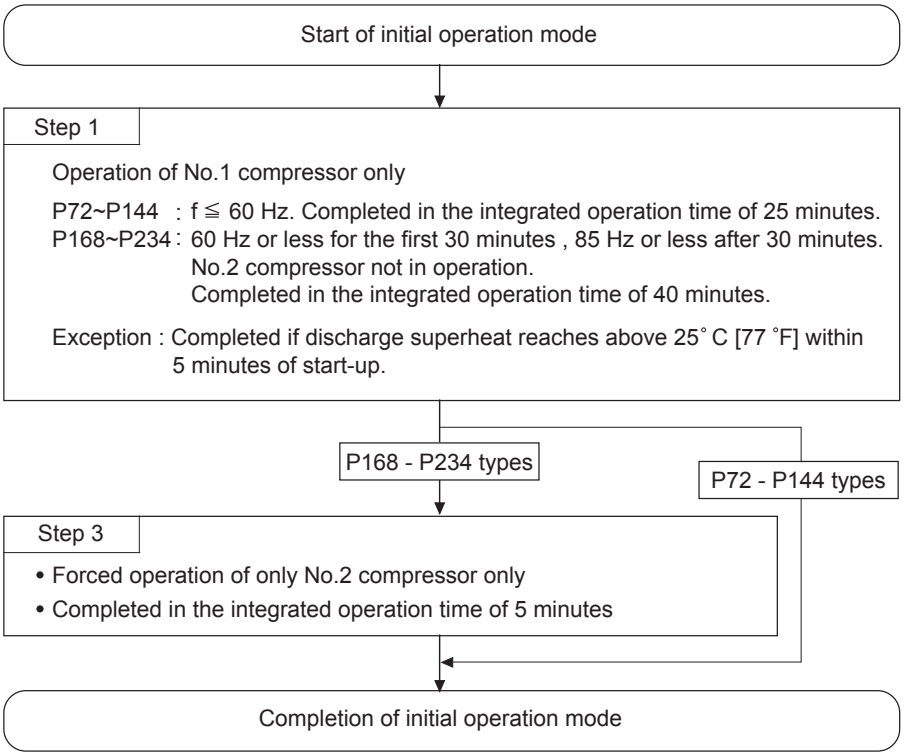

(2) Initial start-up control of P168-P234 models: time chart
Example

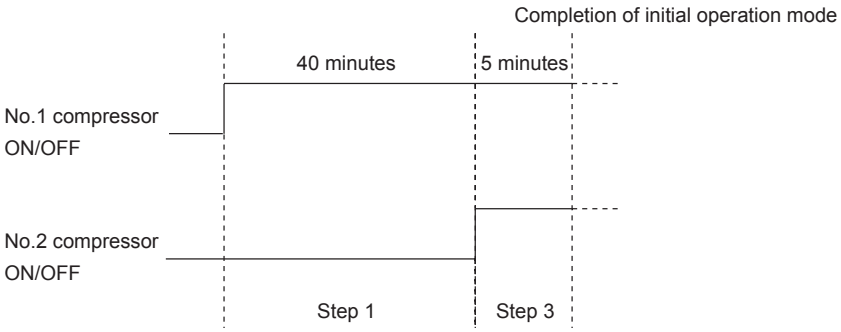

-15- Control at Initial Start-up <PURY>

♦When the unit is started for the first time, it will run the following course of operation.

(1) Flow chart of initial operation mode

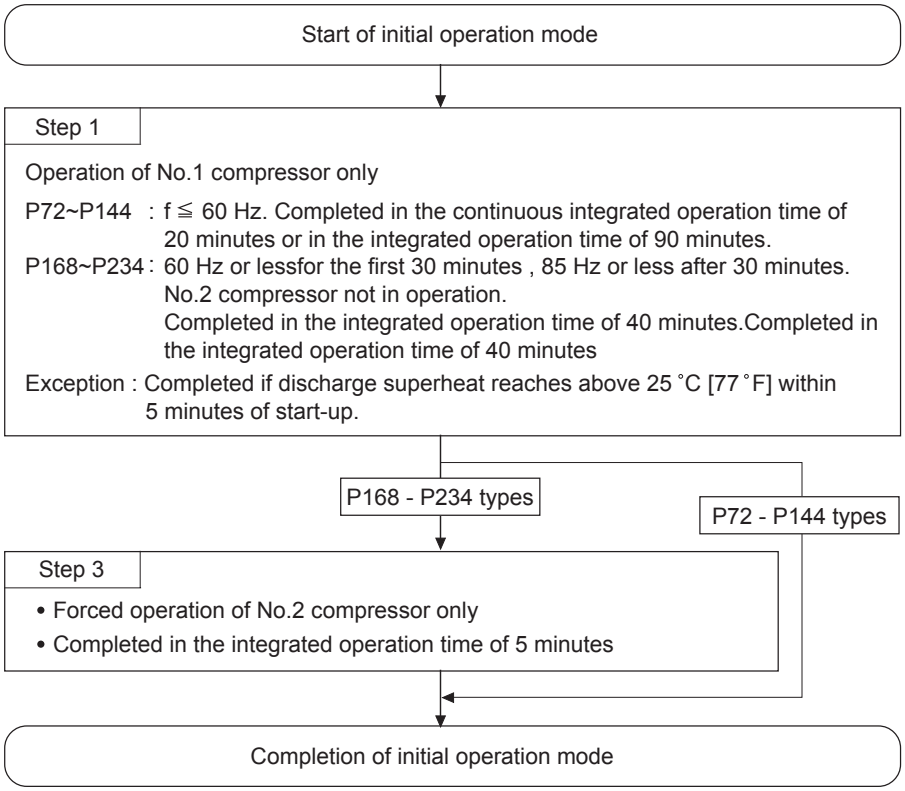

(2) Initial start-up control of P168-P234 models: time chart
Example

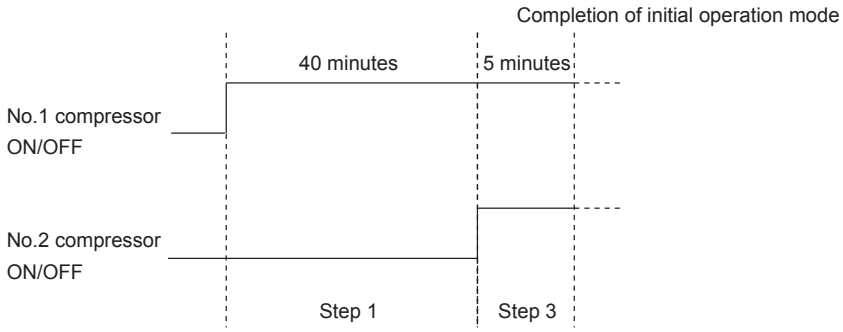

[Restrictions for the initial setup mode during heating]
When the compressor discharge SH is small or the discharge pressure is low in heating only, heating main, or cooling main mode, the total capacity of operable outdoor unit will be restricted.(other than when there is only one indoor unit)
[Total capacity of operable indoor unit]
In case of Indoor unit of P72 model: P32 model or less
In case of outdoor unit of P96-P234 models: P52 model or less

-16- Emergency Operation Mode (P168-P234 models only) <PUHY/PURY>

When compressors (No.1 or No.2) fails, the unit goes into the emergency operation mode to respond to the problem. The unit can be put into this mode by performing an error reset on the remote controller.

(1) Starting the emergency operation
1) When an error occurs, the error source and the error code will be displayed on the display on the remote controller.
2) The error is reset using the remote controller.
3) The unit will go into the mode that is appropriate to the error type.

Pattern of emergency operation mode	Error source	Type of error that allows the unit to go into the emergency operation		Type of error that does not allow the unit to go into the emergency operation	Operation
At malfunction of No.1 (INV)	Outdoor unit	Heatsink thermistor ,<Inverter error> Overcurrent break Overload protection Heatsink overheat protection Cooling fan abnormality Bus voltage drop protection IDC sensor/circuit error VDC sensor/circuit error THHS sensor/circuit error IPM communication error	4230 4250 4240 4230 4260 4220 5301 4200 5110 0403	All errors other than the ones listed on the left	Emergency operation with only No.2 compressor * After a retry operation, emergency operation can be resumed by error reset if the error code that corresponds to the error that is experienced is listed under <Inverter Error> on the left, even if the error code does not match the original error code. 4250 -> reset -> retry -> 4240 -> reset -> emergency operation
At malfunction of No.2		Overcurrent protection	4108		Emergency operation with only No.1 compressor

(2) Ending the emergency operation
1) End conditions
When one of the following conditions is met, emergency operation will end.
- When an integrated operation time of compressor in cooling mode has reached 5 hours.
- When an integrated operation time of compressor in heating mode has reached 5 hours.
- When an error is detected that does not allow the unit to run the emergency operation.

2) Control at the completion of and after the emergency operation
- To end the operation, stop the compressor and bring up the error code on the display on the remote controller.
- If another error reset is performed upon finishing an emergency operation, the unit will repeat the procedures 1) through 3) under section (1) above.
- To finish an emergency operation and to run a current-carrying operation after correcting the error, perform a power reset.

-17- Control Method <PURY>

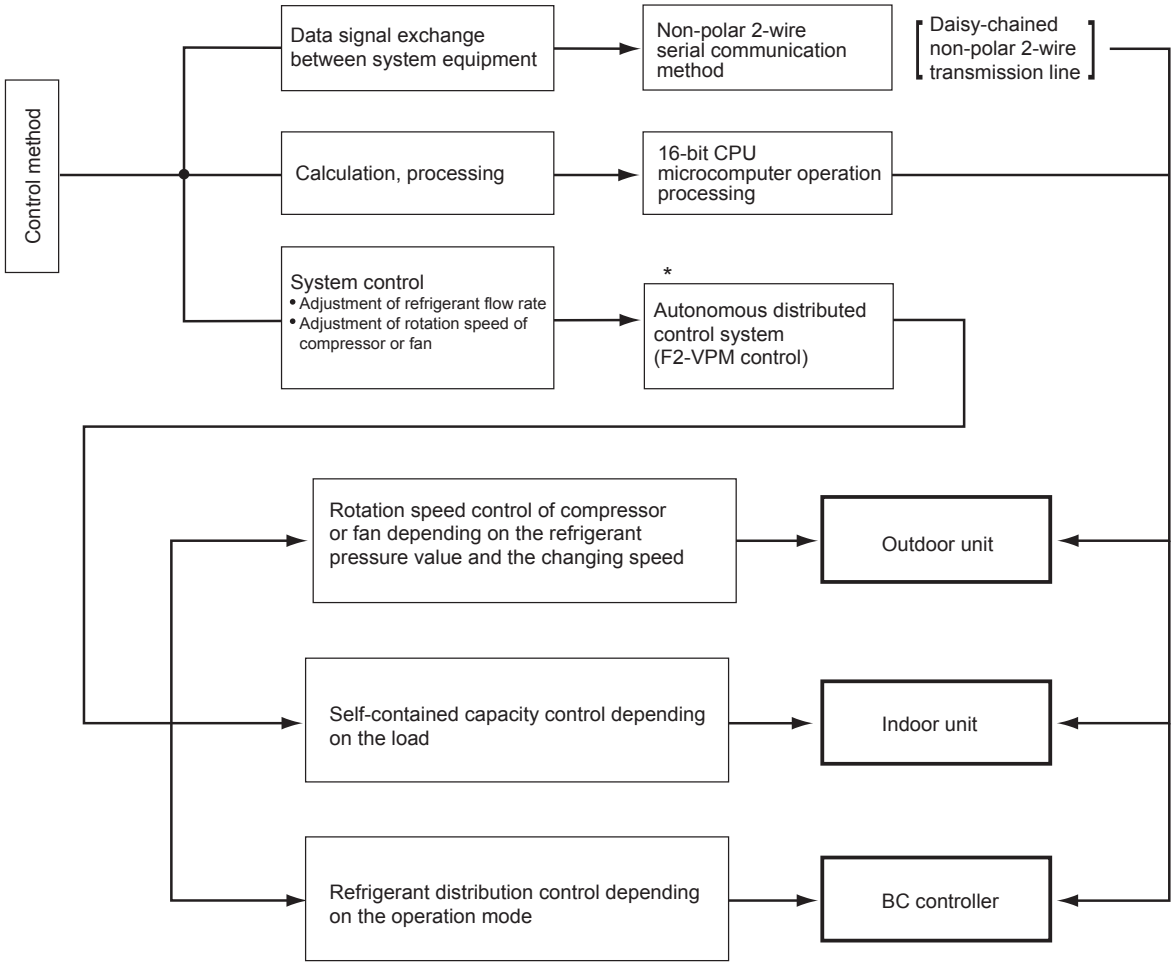

Autonomous distributed control system : A system that consists of three independent sub control systems, instead of a single centralized control system, that work together to maintain the overall control of the entire system.

-18- Cooling/heating Circuit Control and General Function of System Equipment

Operation status	Schematic diagram of refrigerant circuit (Gas / Two-phase / Liquid)	Schematic diagram of refrigerating cycle
Cooling only	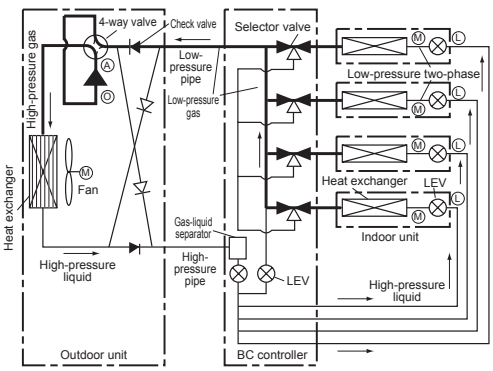	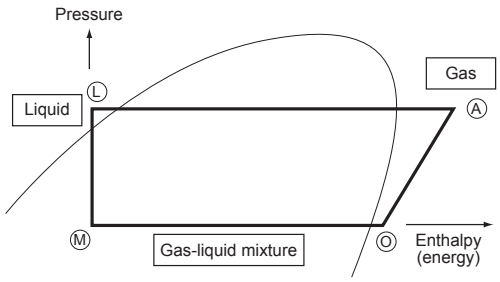
Cooling main	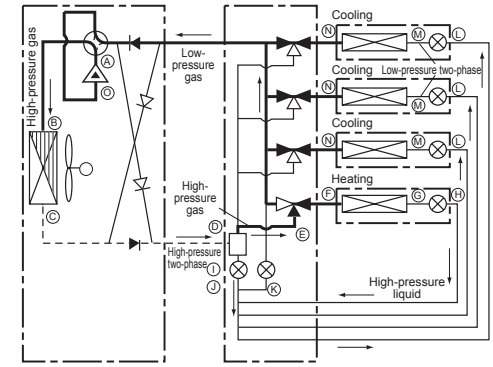	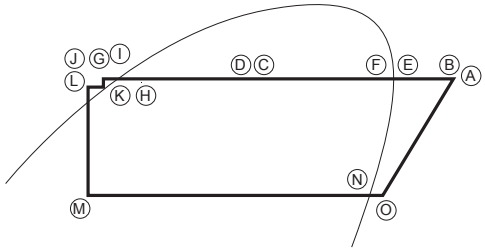
Heating only	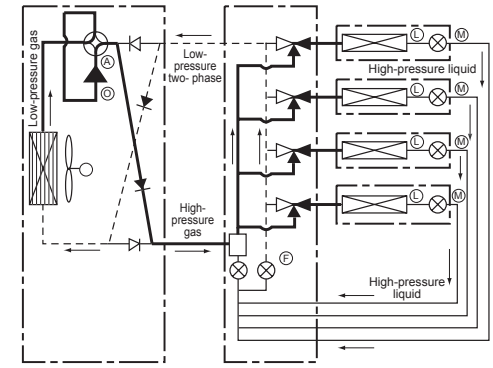	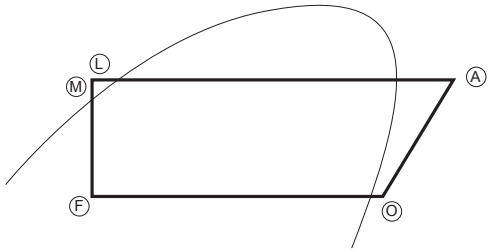
Heating main	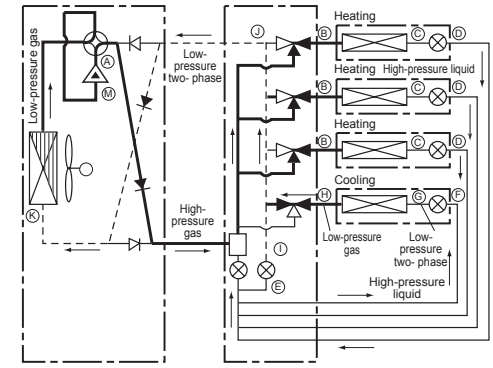	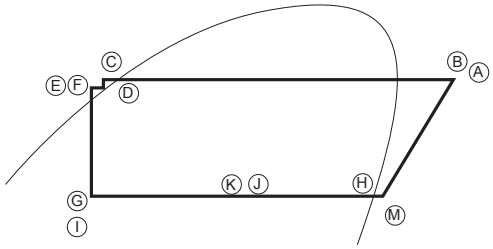

-19- Operation Mode <PUHY>

(1) Indoor unit operation mode

The operation mode can be selected from the following 5 modes using the remote controller.

1	Cooling mode
2	Heating mode
3	Dry mode
4	Fan mode
5	Stopping mode

(2) Outdoor unit operation mode

1	Cooling mode	All indoor units in operation are in cooling mode.
2	Heating mode	All indoor units in operation are in heating mode.
3	Stopping mode	All indoor units are in fan mode or stopping mode.

Note: When the outdoor unit is performing a cooling operation, the operation mode of the connected indoor units that are not in the cooling mode (Stopped, Fan, Thermo-OFF) cannot be changed to heating from the remote controller. If this attempt is mode, "Heating" will flash on the remote controller. The opposite is true when the outdoor unit is performing a heating operation. (The first selection has the priority.)

-20- Operation Mode <PURY>

(1) Indoor unit operation mode

The operation mode can be selected from the following 6 modes using the remote controller.

1	Cooling mode
2	Heating mode
3	Dry mode
4	Automatic cooling/heating mode
5	Fan mode
6	Stopping mode

(2) Outdoor unit operation mode

1	Cooling only mode	All indoor units in operation are in cooling mode.
2	Heating only mode	All indoor units in operation are in heating mode.
3	Cooling main mode	Coexistence of units in cooling and heating modes.
4	Heating main mode	Coexistence of units in cooling and heating modes.
5	Stopping mode	All indoor units are in fan mode or stopping mode.

Note: When units in cooing and heating coexist, the operation mode (cooling main mode or heating main mode) will be determined, based on the refrigerant pressure in the R2 refrigerant circuit and speed variation data.

(3) Operation pattern for automatic cooling/heating mode

When the automatic cooling/heating mode is selected from remote controller functions, the indoor temperature will be detected in pattern as shown in the figure below, and the operation mode (cooling or heating) will automatically be selected.

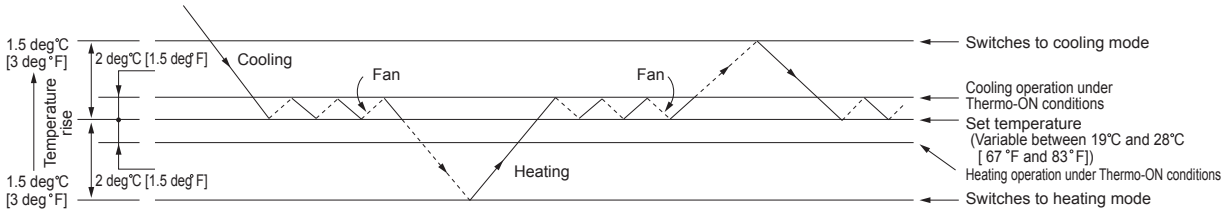

(4) Relationship between the operation mode and the load capacity (kW) (within a system)

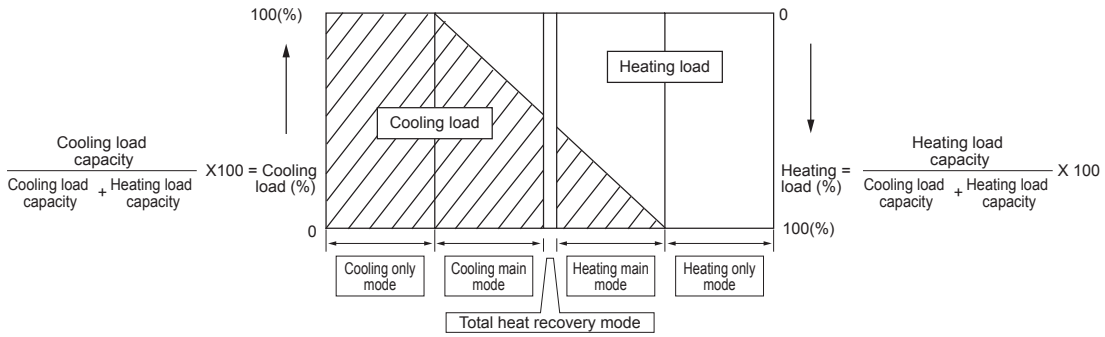

-21- DEMAND Control <PUHY/PURY>

Cooling/heating operation can be prohibited (Thermo-OFF) by an external input to the indoor units.

Note: When DIP SW4-7 is set to ON, the 4-step DEMAND control is enabled. While this control is enabled, the NIGHT MODE will be disabled.

Refer to 2 [2] 2.(5) for detailed information on DEMAND control.

[3] Controlling BC Controller

1. Control of SV ■ A, SV ■ B, and SV ■ C

SV ■ A, SV ■ B, and SV ■ C turn on or off depending on the operation mode of the branch.

		Mode			
		Cooling	Heating	Stopped	Defrost
Port	SV ■ A	ON	OFF	OFF	OFF
	SV ■ B	OFF	ON	OFF	OFF
	SV ■ C	ON	OFF	OFF	OFF

2. Control of SVM1

SVM turns on or off depending on the operation mode.

Operation mode	Cooling only	Cooling main	Heating only	Heating main	Defrost	Stopped
SVM1	ON	Pressure differential control*1	OFF	OFF	ON	OFF

*1. Pressure differential control: The detected differential pressure (PS1 and P3) is controlle every minute so as to be within a certain range.

3. Control of LEV ■

LEV ■ opening (sj) is controlled as follows depending on the operation mode.

	Operation mode	Cooling only	Cooling main	Heating only	Heating main	Defrost	Stopped
NU-G, NU-GA model	LEV1	2000	Liquid level control*1 Pressure differential control*2	110	110*3	2000	1200
	LEV2 (only for NU-GA model)						
	LEV3	Superheat control*4		Pressure differential control*2	Pressure differential control*2	NU-G: 1000 NU-GA: 2000	60
NU-GB model	LEV3a	Superheat control*4	Superheat control*4	60	60	60	60

*1. Liquid level control: The liquid level detected by the liquid inlet temperature (TH11 sensor) is controlled so as to be within a certain range.

*2. Pressure differential control: The detected differential pressure (PS1 and P3) is controlle every minute so as to be within a certain range.

*3. Can be 110 or more due to pressure rise on the liquid side (PS1).

*4. Superheat control: The amound of superheat that is calculated on the bypass inlet and outlet temperature (NU-G, NU-GA: TH12,TH15, NU-GB: TH22, TH25) is controlled every minute so as to be within a certain range.

4. Control of SVM2 (only for NU-GA model)

Operation mode	Cooling only	Cooling main	Heating only	Heating main	Defrost	Stopped
SVM2	OFF	OFF	Pressure differential control*1	Pressure differential control*1	OFF	OFF

*1. Pressure differential control: The detected differential pressure (PS1 and P3) is controlled every minute so as to be within a certain range.

[4] Operation Flow Chart

1. Mode determination flowchart <PUHY>

(1) Indoor unit (cooling, heating, dry, fan mode)

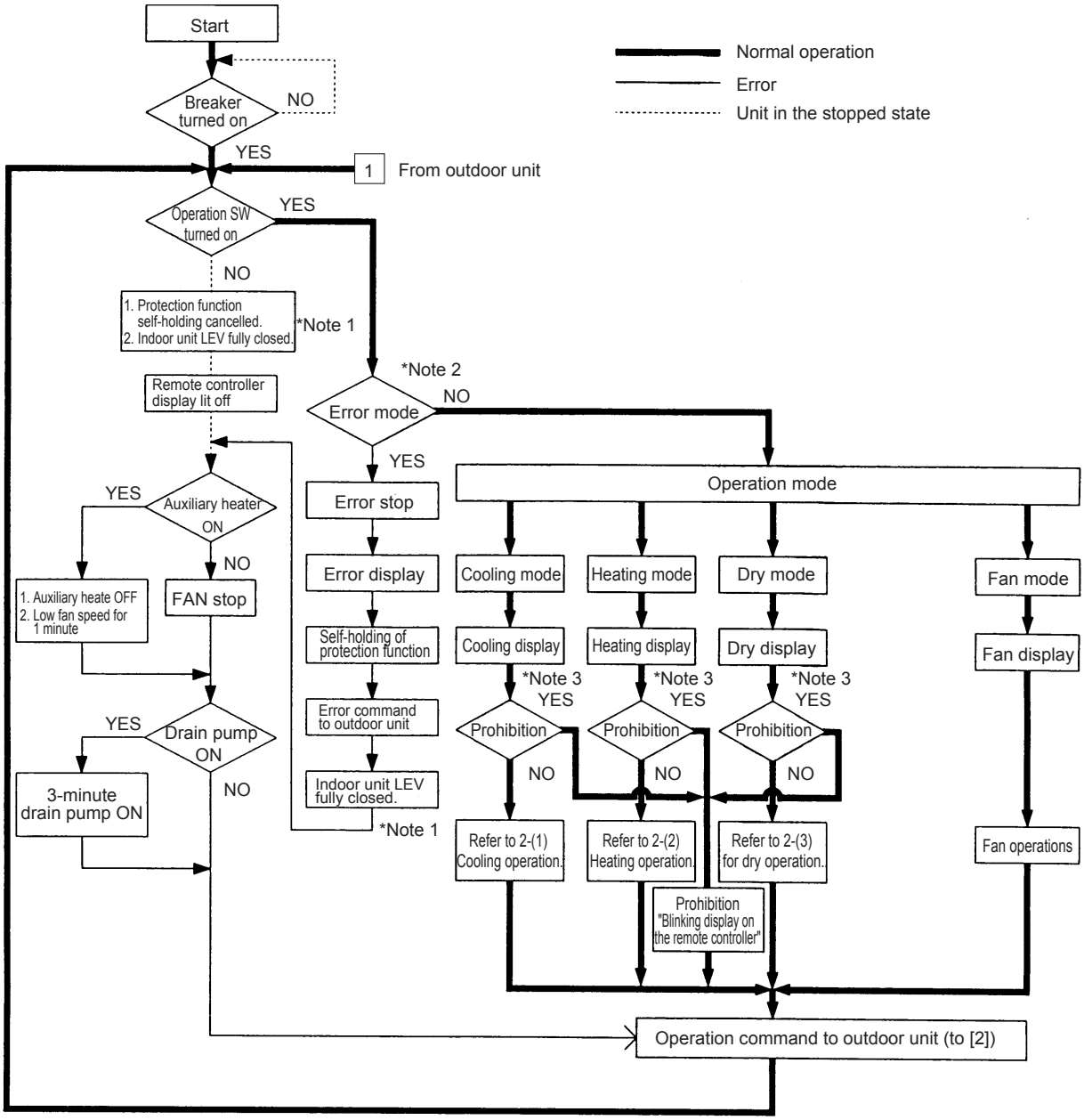

*Note 1. Indoor unit LEV fully closed : Opening 41.

*Note 2. The system may go into the error mode on either the indoor unit or the outdoor unit side. If some of the indoor units are experiencing a problem (except water leakage), only those indoor units that are experiencing the problems will stop. If the outdoor unit is experiencing a problem, all connected indoor units will stop.

*Note 3. The operation will be prohibited when the set cooling/heating mode is different from that of the outdoor unit.

(2) Outdoor unit (cooling and heating modes)

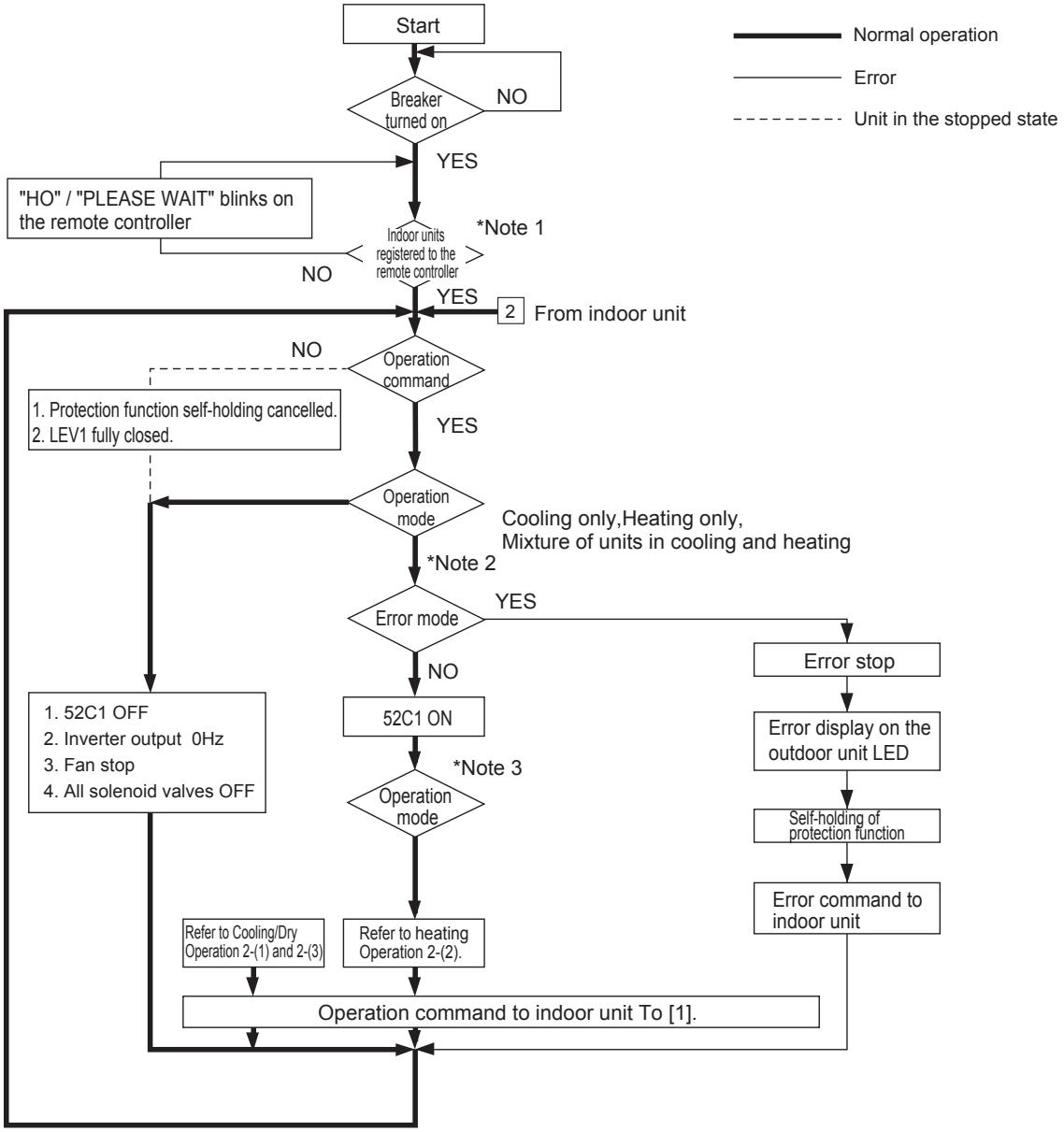

*Note 1. For about 3 minutes after power on, search for the indoor unit address, for the remote controller address, and for the group information will start. During this, "HO" / "PLEASE WAIT" blinks on the display of the remote controller. When the indoor unit to be controlled by the remote controller is missing, "HO" / "PLEASE WAIT" keeps blinking on the display of the remote controller even after 3 or more minutes after power on.

*Note 2. The system may go into the error mode on either the indoor unit or the outdoor unit side. The outdoor stops only when all of the connected indoor units are experiencing problems. The operation of even a single indoor unit will keep the outdoor unit running. The error will be indicated on the LED display.

*Note 3. The outdoor unit operates according to the operation mode commanded by the indoor unit. However, when the outdoor unit is running a cooling operation, come of the operating indoor units will stop, or the operation of these indoor units will be prohibited even when the indoor unit mode is switched from fan mode to heating mode. This also applies when the outdoor unit is running a heating operation.

2. Operations in each mode <PUHY>

(1) Cooling operation

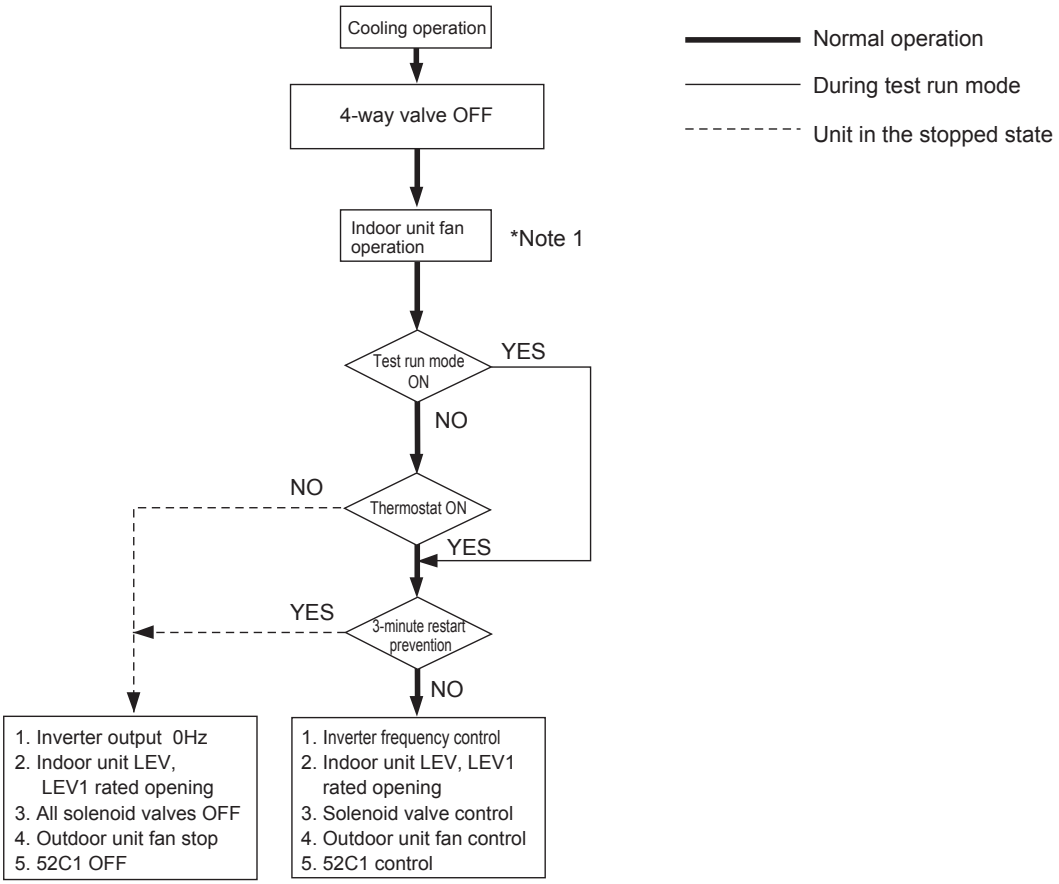

*Note 1. The indoor fan operates at the set notch under cooling mode regardless of the ON/OFF state of the thermostat.

(2) Heating operation

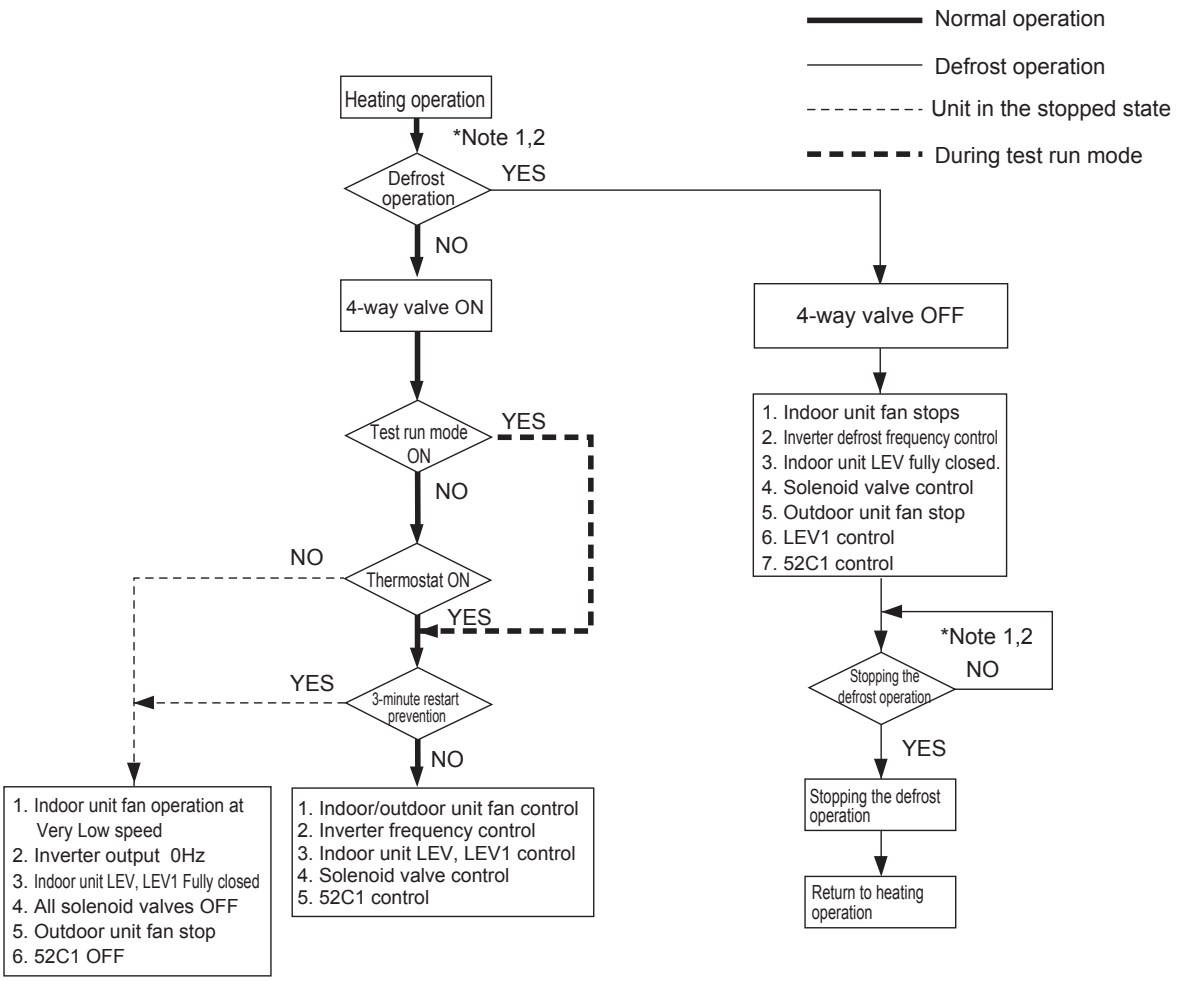

*Note 1. When outdoor unit starts defrosting, it transmits defrost operations command to indoor unit, and the indoor unit starts defrosting operations. Similarly when defrosting operation stops, indoor unit returns to heating operation after receiving defrost end command of outdoor unit.

*Note 2. Defrost end condition: 10 or more minutes must pass after defrost operation.
or
Outdoor unit piping temperature: refer to "-7-. Defrost operation control" of [2] Controlling the Outdoor Unit.

(3) Dry operation

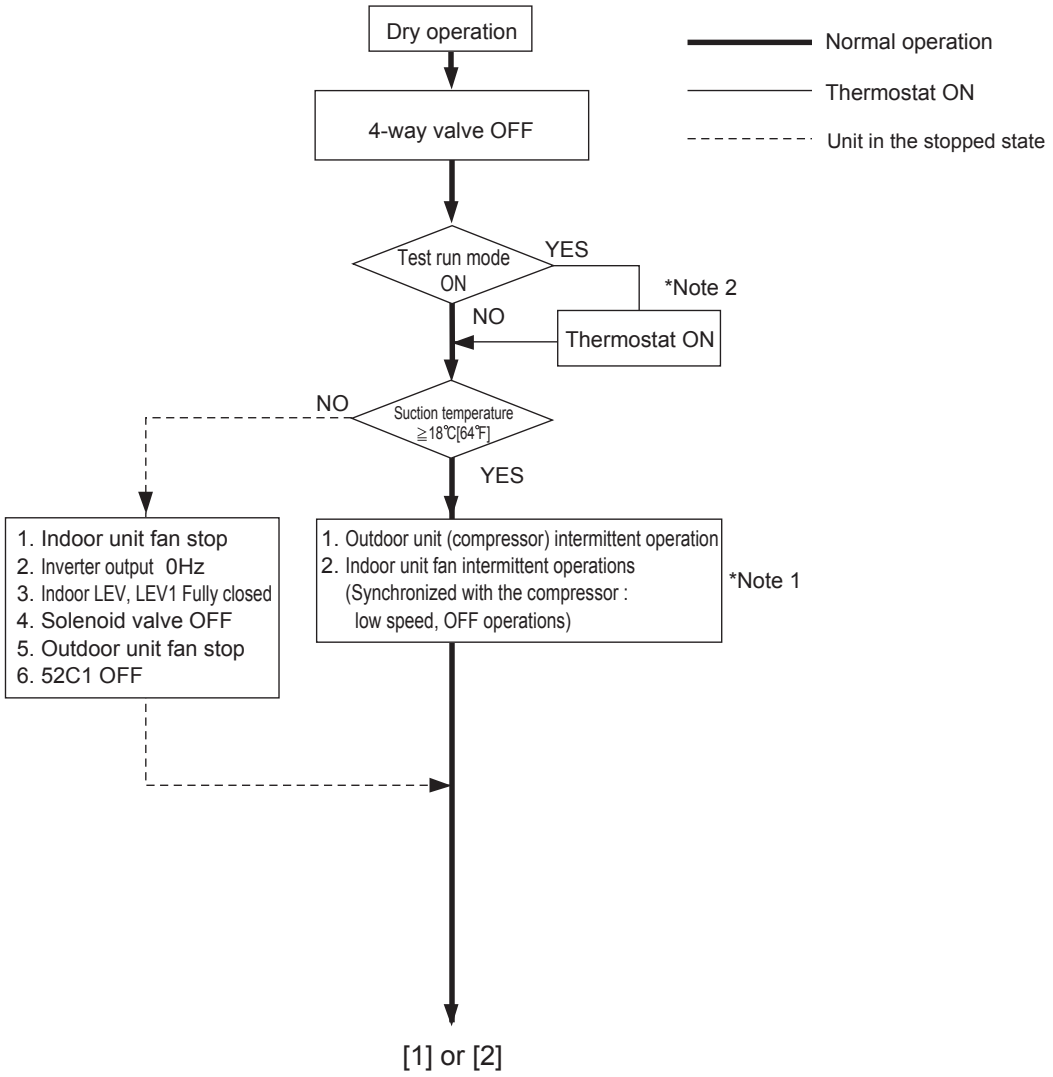

*Note 1. When the indoor unit inlet temperature exceeds 18˚C [64˚F], the outdoor unit (compressor) and the indoor unit fan start the intermittent operation simultaneously. When the indoor unit inlet temperature becomes 18℃ [64˚F] or less, the fan always runs (at low speed). The outdoor unit, the indoor unit, and the solenoid valve operate in the same way as they do in the cooling operation when the compressor is turned on.

*Note 2. Thermostat is always kept on during test run mode, and indoor and outdoor unit intermittent operation (ON) time is a little longer than that of normal operation.

3. Mode determination flowchart <PURY>

(1) Indoor unit (cooling, heating, dry and fan modes)

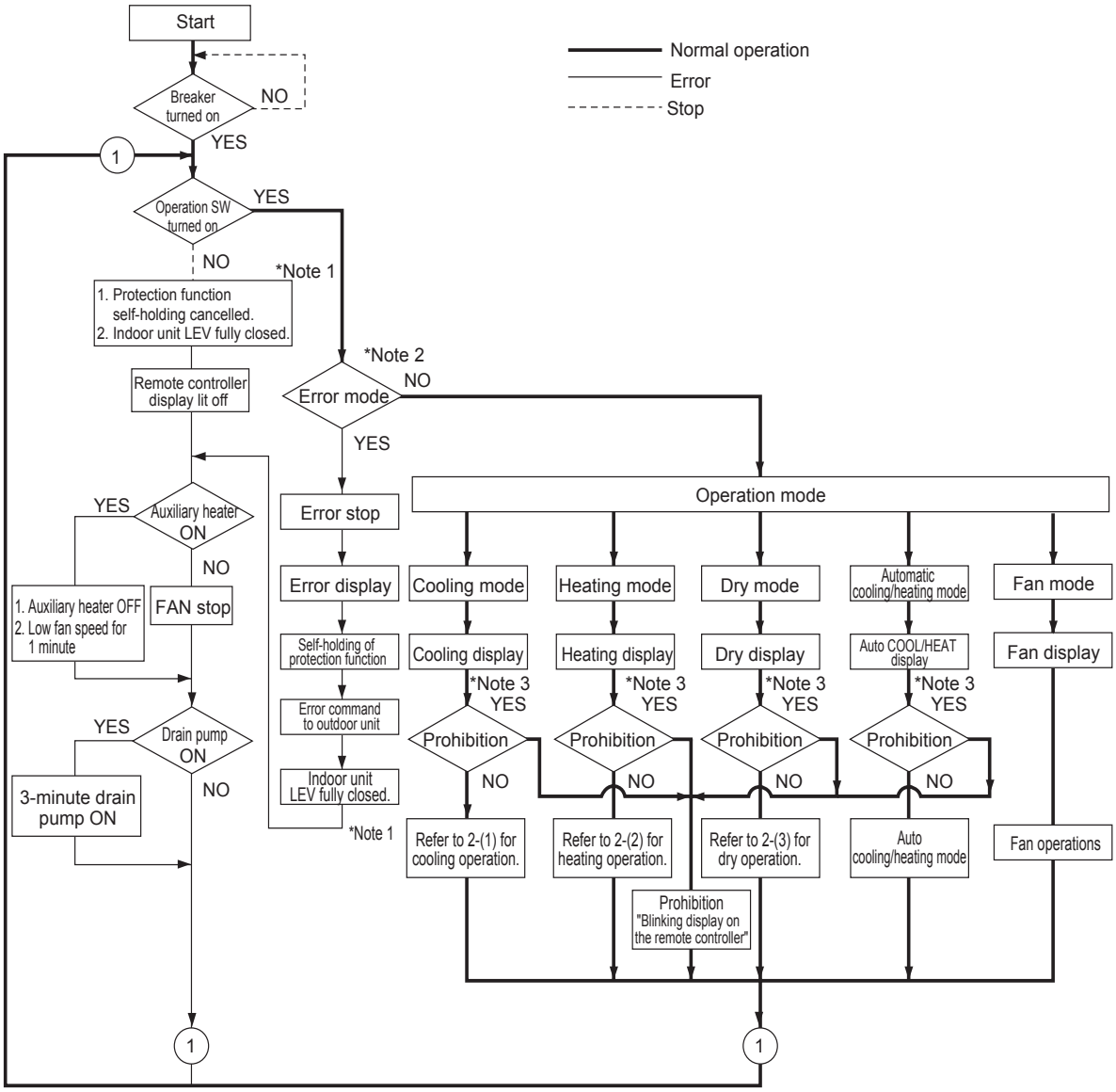

*Note 1. Indoor unit LEV fully closed : Opening 41.

*Note 2. The system may go into the error mode on either the indoor unit side or the BC controller or outdoor unit side. If some of the indoor units are experiencing a problem, only those indoor units that are experiencing the problem will stop. If the BC controller or the outdoor unit is experiencing a problem, all the connected units will stop.

*Note 3. If multiple indoor units are connected to a port and there is a discrepancy in the operation mode between the indoor unit and the port, the operation will be prohibited. (Operation mode blinks on the remote controller, the Fan stops, indoor unit LEV becomes fully closed.)

(2) Outdoor unit (cooling only, heating only, cooling main and heating main modes)

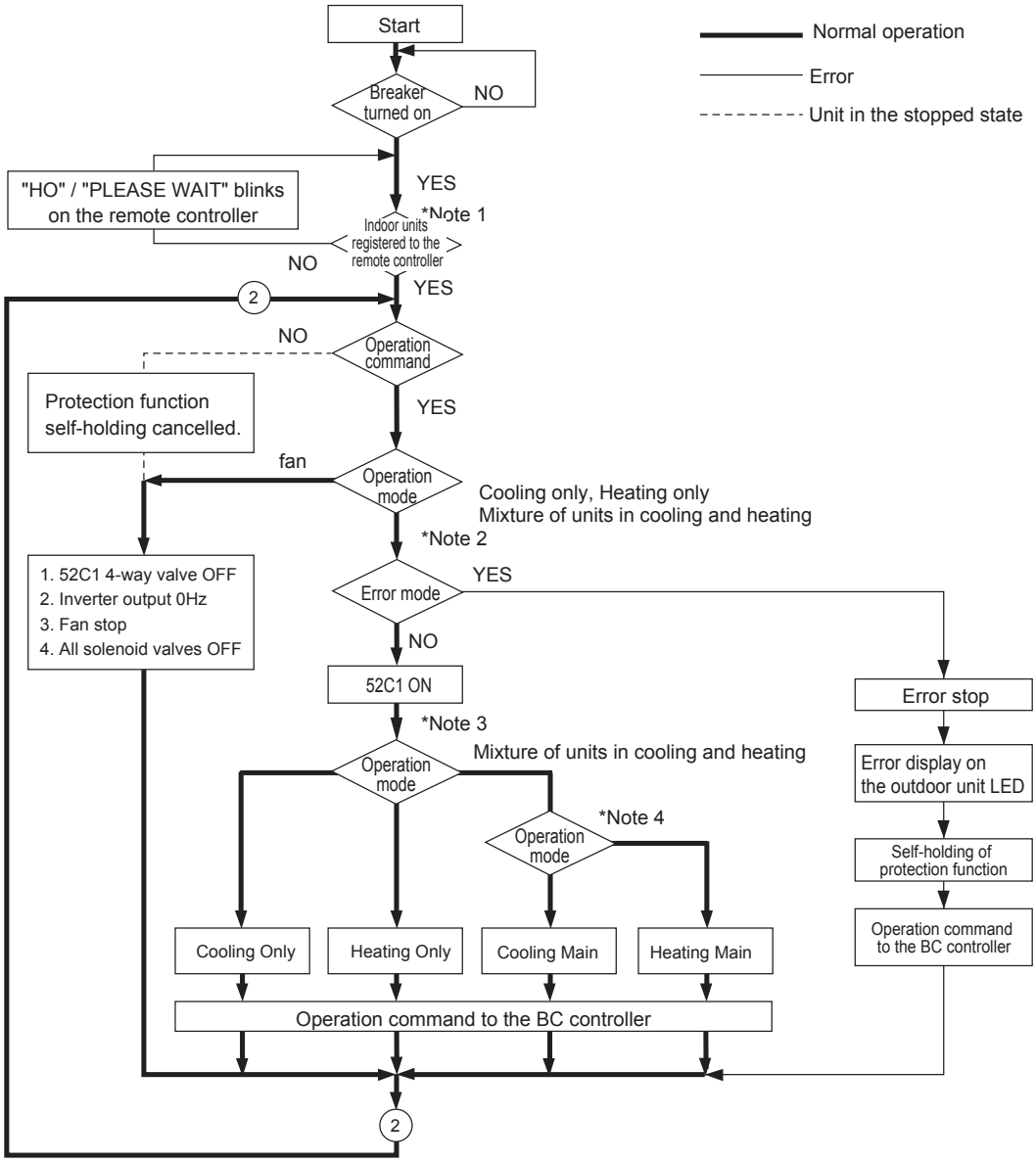

*Note 1. For about 3 minutes after power on, search for the indoor unit address, for the remote controller address, and for the group information will start. During this, "HO"/ "PLEASE WAIT" blinks on the display of the remote controller. When the indoor unit to be controlled by the remote controller is missing, "HO"/ "PLEASE WAIT" keeps blinking on the display of the remote controller even after 3 or more minutes after power on.

*Note 2. The system may go into the error mode on either the indoor unit or the outdoor unit side. The outdoor stops only when all of the connected indoor units are experiencing problems. The operation of even a single indoor unit will keep the outdoor unit running. The error will be indicated on the LED display.

*Note 3. The units will follow the operation mode commands from the BC controller

*Note 4. When the operation mode commands from the BC controllers are mixed (both cooling and heating), the actual operation mode is determined by the outdoor unit.

(3) BC controller (cooling only, heating only, cooling main and heating main modes)

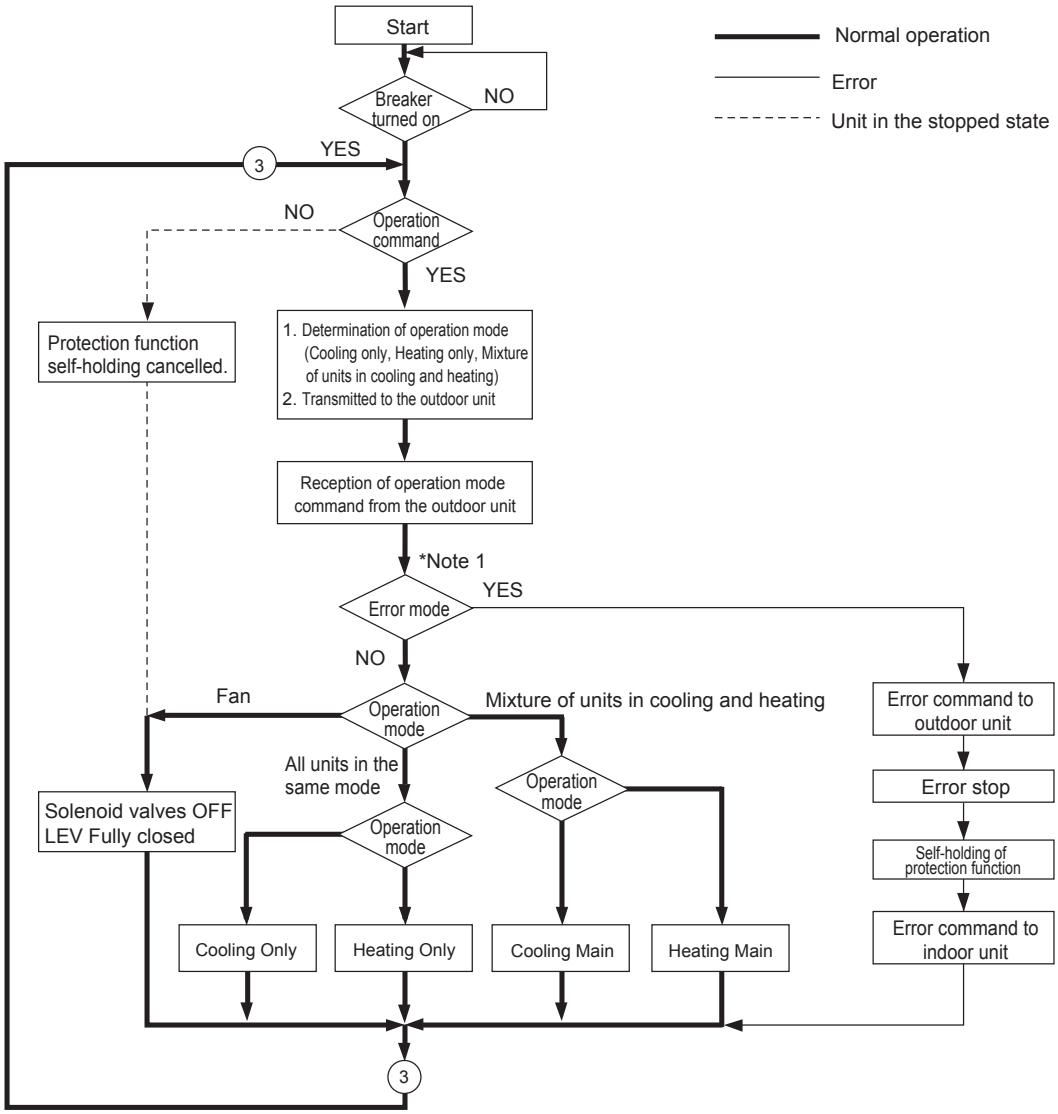

Note 1. The system may go into the error mode on either the indoor unit side or the BC controller or outdoor unit side. If some of the indoor units are experiencing a problem, only those indoor units that are experiencing the problem will stop. If the BC controller or the outdoor unit is experiencing a problem, all the connected units will stop.

4. Operations in each mode <PURY>

(1) Cooling operation

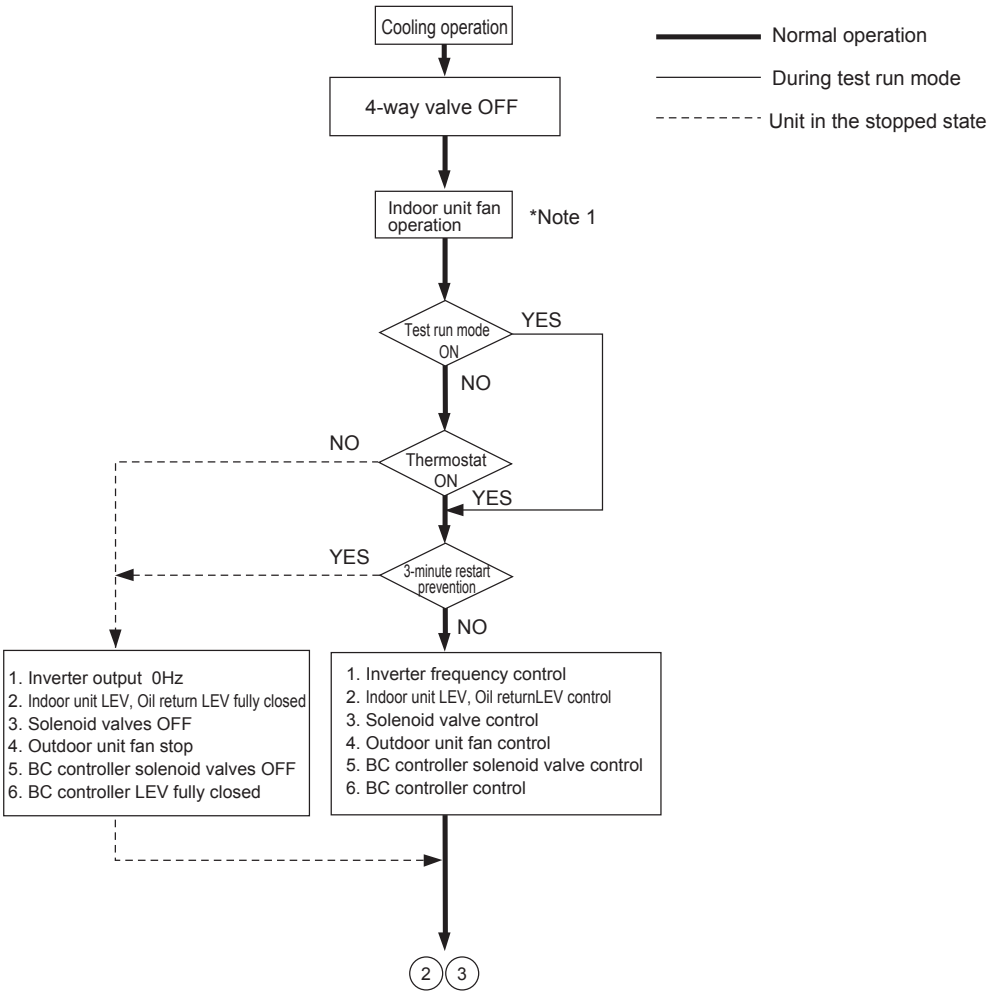

*Note 1. The indoor fan operates at the set notch under cooling mode regardless of the ON/OFF state of the thermostat.

(2) Heating operation

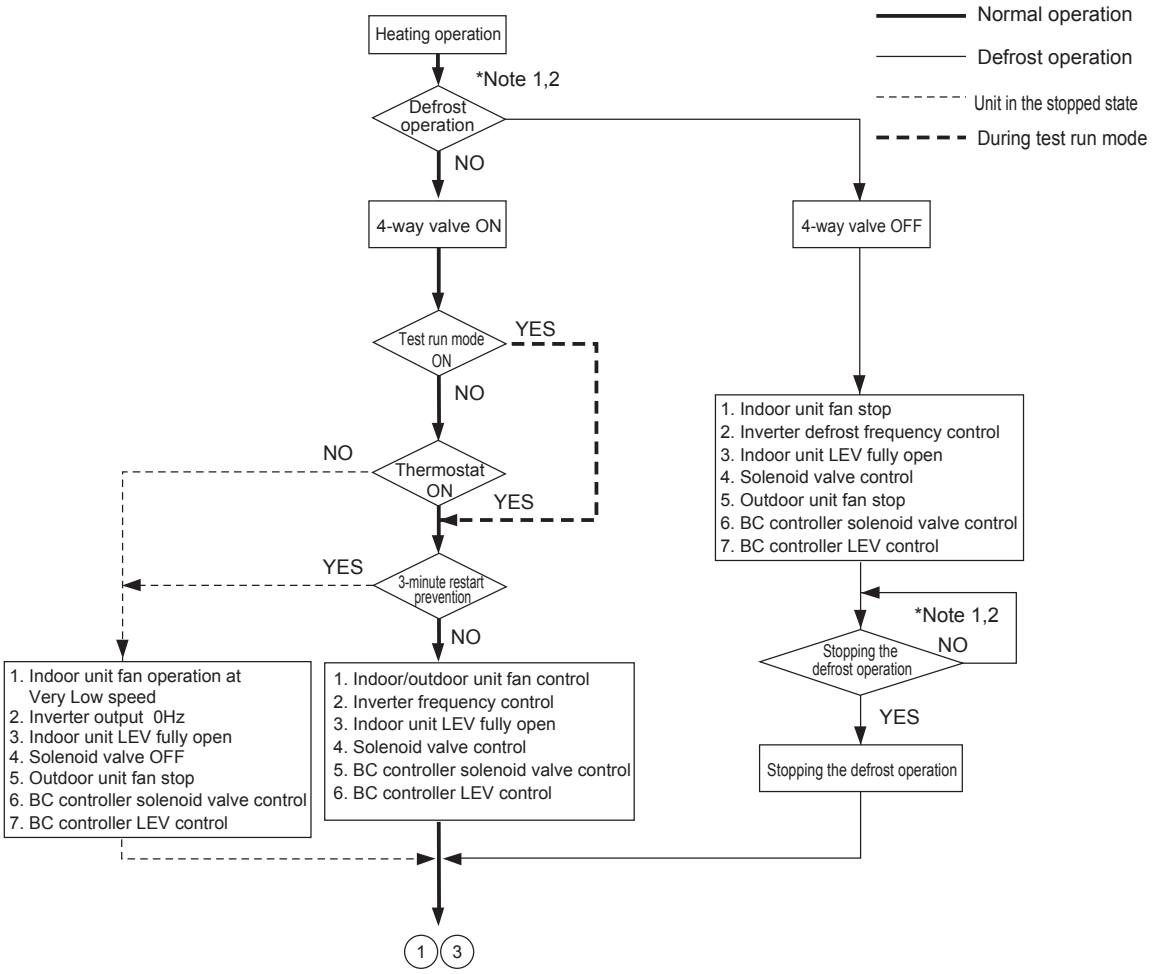

*Note 1. When the outdoor unit goes into the defrost mode, defrost command is sent to the BC controller and indoor units. Upon reception of the command, the indoor units will go into the defrost mode. When defrosting is completed and upon receiving the signal that indicates the completion of defrosting, indoor units will resume the heating operation.

*Note 2. Defrost end condition: 10 or more minutes must pass after defrost operation.
or Outdoor unit piping temperature: refer to "-8-. Defrost operation control" of [2] Controlling the Outdoor Unit.

(3) Dry operation

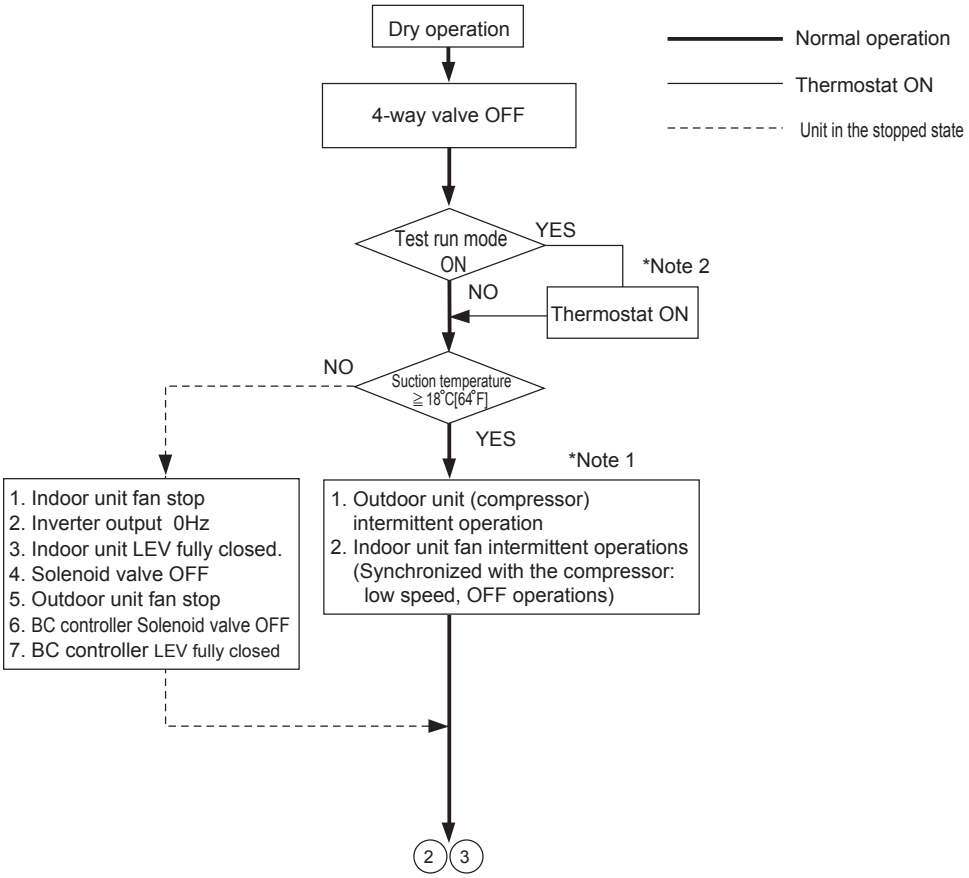

*Note 1.When the indoor unit inlet temperature exceeds 18˚C [64˚F], the outdoor unit (compressor) and the indoor unit fan start the intermittent operation simultaneously. When the indoor unit inlet temperature becomes 18˚C [64˚F],or less, the fan always runs (at low speed). The outdoor unit, the indoor unit, and the solenoid valve operate in the same way as they do in the cooling operation when the compressor is turned on.

*Note 2.Thermostat is always kept on during test run mode, and indoor and outdoor unit intermittent operation (ON) time is a little longer than that of normal operation.

VIII Test Run Mode

[1] Items to be checked before a Test Run 179
[2] Test Run Method 180
[3] Operating Characteristic and Refrigerant Amount 181
[4] Adjusting the Refrigerant Amount 182
[5] Refrigerant Amount Adjust Mode 187
[6] The following symptoms are normal. 191
[7] Standard Operation Data (Reference Data) 192

[1] Items to be checked before a Test Run

1	Check for refrigerant leak and loose cables and connectors.
2	Measure the insulation resistance between the power supply terminal block and the ground with a 500V megger and make sure it reads at least 1.0Mohm. Caution: (1) Do not operate the unit if the insulation resistance is below 1.0Mohm. (2) Do not apply megger voltage to the terminal block for transmission line. Doing so will damage the controller board. (3) The insulation resistance between the power supply terminal block and the ground could go down to close to 1Mohm immediately after installation or when the power is kept off for an extended period of time because of the accumulation of refrigerant in the compressor. (4) If insulation resistance reads at least 1Mohm, by turning on the main power and powering the crankcase heater for at least 12 hours, the refrigerant in the compressor will evaporate and the insulation resistance will go up. (5) Do not measure the insulation resistance of the terminal block for transmission line for the unit remote controller.
3	Make sure that the stop valve on the gas pipe, liquid pipe, and oil balance pipe are fully open. Caution: Securely tighten the cap.
4	Check the phase sequence and the voltage of the 3-phase power supply. Caution: If an open phase or a reverse phase is detected, it will be treated as an abnormal stop during test run (4103 error).
5	Turn on the main power to the unit at least 12 hours before test run to power the crankcase heater. Caution: Insufficient powering time may result in compressor damage.

[2] Test Run Method

The figure shows an MA deluxe remote controller.

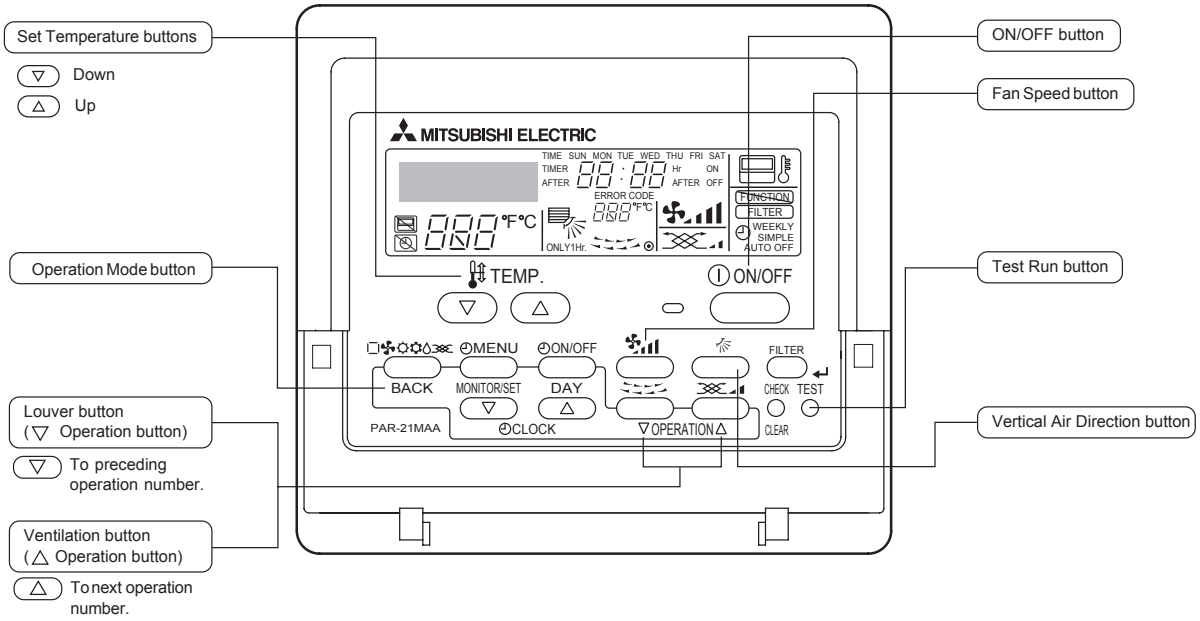

Operation procedures		
Turn on the main power.	→	"PLEASE WAIT" appears on the LCD for up to five minutes. Leave the power on for 12 hours. (Energize the crankcase heater.)
Press the Test button twice.	→	"TEST RUN" will appear on the LCD.
Press the Operation Mode button.	→	Make sure that the air is blowing out.
Switch to cooling (or heating) operation by pressing the Operation Mode button. → Make sure that cold (or warm) air blows out.		
Press the Fan Speed button.	→	Make sure that the fan speed changes with each pressing of the button.
Change the air flow direction by pressing the Vertical Air Direction button or the Louver button. → Make sure that the air flow direction changes with each pressing of the button.		
→ Confirm the operation of outdoor unit fan.		
Confirm the operation of all interlocked equipment, such as ventilation equipment.		
Cancel the test run by pressing the ON/OFF button.	→	Stop
Note 1: Refer to the following pages if an error code appears on the remote controller or when the unit malfunctions. 2: The OFF timer will automatically stop the test run after 2 hours. 3: The remaining time for the test run will be displayed in the time display during test run. 4: The temperature of the liquid pipe on the indoor unit will be displayed in the room temperature display window on the remote controller during test run. 5: On some models, "NOT AVAILABLE" may appear on the display when the Vertical Air Direction button is pressed. This is normal.		

[3] Operating Characteristic and Refrigerant Amount

It is important to have a clear understanding of the characteristics of refrigerant and the operating characteristics of air conditioners before attempting to adjust the refrigerant amount in a given system.

1. Operating characteristic and refrigerant amount

The following table shows items of particular importance.

1	During cooling operation, the amount of refrigerant in the accumulator is the smallest when all indoor units are in operation.	
2	During heating operation, the amount of refrigerant in the accumulator is the largest when all indoor units are in operation.	
3	General tendency of discharge temperature	Discharge temperature tends to rise when the system is short on refrigerant.
		Changing the amount of refrigerant in the system while there is refrigerant in the accumulator has little effect on the discharge temperature.
		The higher the pressure, the more likely it is for the discharge temperature to rise.
		The lower the pressure, the more likely it is for the discharge temperature to rise.
4	When the amount of refrigerant in the system is adequate, the compressor shell temperature is 10 to 60K [18 to 108°F] higher than the low pressure saturation temperature (Te). → If the temperature difference between the compressor shell temperature and low pressure saturation temperature (Te) is smaller than 5K [9°F], an overcharging of refrigerant is suspected.	

[4] Adjusting the Refrigerant Amount

1. Symptoms

Overcharging or undercharging of refrigerant can cause the following symptoms :
Before attempting to adjust the amount of refrigerant in the system, thoroughly check the operating conditions of the system. Then, adjust the refrigerant amount by running the unit in the refrigerant amount adjust mode.

1	The system comes to an abnormal stop, displaying 1500 (overcharged refrigerant) on the controller.	Overcharged refrigerant
2	The operating frequency does not reach the set frequency, and there is a problem with performance.	Insufficient refrigerant amount
3	The system comes to an abnormal stop, displaying 1102 (abnormal discharge temperature) on the controller.	

2. Amount of refrigerant

(1) To be checked during operation

Operate all indoor units in either cooling-only or heating-only mode, and check such items as discharge temperature, subcooling, low pressure, suction temperature, and shell bottom temperature to estimate the amount of refrigerant in the system.

	Symptoms	Conclusion
1	Discharge temperature is high. (Normal discharge temperature is below 95°C [203°F].)	Slightly undercharged refrigerant
2	Low pressure is unusually low.	
3	Suction superheat is large. (Normal suction superheat is less than 20K [36°F].)	
4	Compressor shell bottom temperature is high. (The difference between the compressor shell bottom temperature and low pressure saturation temperature (Te) is greater than 60K [108°F].)	
5	Discharge superheat is small. (Normal discharge superheat is greater than 10K[18°F].)	Slightly overcharged refrigerant
6	Compressor shell bottom temperature is low. (The difference between the compressor shell bottom temperature and low pressure saturation temperature (Te) is less than 5K [9°F].)	

3. Amount of refrigerant to be added <PUHY>

The amount of refrigerant that is shown in the table below is factory-charged to the outdoor units.
The amount necessary for extended pipe (field piping) is not included and must be added on site.

Outdoor unit model	P72	P96	P108	P126	P144
Amount of pre-charged refrigerant in the outdoor unit (kg[lbs-oz])	7.0[15-7]	9.5[20-16]	9.5[20-16]	13.0[28-11]	13.0[28-11]

Outdoor unit model	P168	P192	P204	P216	P234
Amount of pre-charged refrigerant in the outdoor unit (kg[lbs-oz])	22.0[48-9]	22.0[48-9]	22.0[48-9]	22.0[48-9]	22.0[48-9]

(1) Calculation formula

The amount of refrigerant to be added depends on the size and the length of field piping. (unit in m[ft])

Amount of added refrigerant (kg) = $(0.2 \times L_1) + (0.12 \times L_2) + (0.06 \times L_3) + (0.024 \times L_4) + \alpha$
Amount of added refrigerant (oz) = $(2.15 \times L_1') + (1.29 \times L_2') + (0.65 \times L_3') + (0.26 \times L_4') + \alpha'$

L_1 : Length of ø15.88[3/4"] liquid pipe (m)
L_2 : Length of ø12.7[1/2"] liquid pipe (m)
L_3 : Length of ø9.52[3/8"] liquid pipe (m)
L_4 : Length of ø6.35[1/4"] liquid pipe (m)
α, α' : Refer to the table below.

L_1' : Length of ø15.88[3/4"] liquid pipe [ft]
L_2' : Length of ø12.7[1/2"] liquid pipe [ft]
L_3' : Length of ø9.52[3/8"] liquid pipe [ft]
L_4' : Length of ø6.35[1/4"] liquid pipe [ft]

Total capacity of connected indoor units	α (kg)	α'(oz)
- 30	1.0	36
31 - 60	1.5	53
61 - 126	2.0	71
127 - 180	2.5	89
181 - 234	3.0	106
235 - 264	4.0	142
265 - 366	5.0	178

Round up the calculation result to the nearest 0.01kg. (Example: 16.44kg to 16.5kg)
Round up the calculation result in increments of 4oz (0.1kg) or round it up to the nearest 1oz.
(Example: 540.7oz to 544oz or 541oz)

(2) Example: PUHY-P234TGMU-A

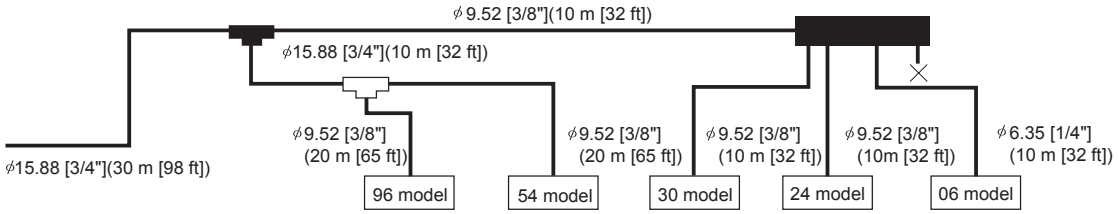

(3) Sample calculation

All the pipes in the figure are liquid pipes.
ϕ15.88 [3/4"] : 30 m [98 ft] + 10 m [32 ft] = 40 m [130 ft]
ϕ9.52 [3/8"] : 10 m [32 ft] + 2 0m [65 ft] + 20 m [65 ft] + 10 m [32 ft] + 10 m [32 ft] = 70 m [226 ft]
ϕ6.35 [1/4"] : 10 m [32 ft]
According to the above formula
Amount of refrigerant to be charged (kg) = (0.2 X 40) + (0.06 X 70) + (0.024 X 10) + 3 = 15.44kg
The calculation result would be 15.44, and it is rounded up to the nearest 0.1.
The final result will be as follows:
Amount of refrigerant to be charged = 15.5kg

Amount of refrigerant to be charged (oz) = (2.15 X 130) + (0.65 X 226) + (0.26 X 32) + 106 = 540.7oz
The calculation result would be 540.7oz, and it is rounded up to the nearest 1 oz or 4 oz.
The final result will be as follows:
Amount of refrigerant to be charged = 544oz or 541oz

⚠ **CAUTION**
Charge liquid refrigerant (as opposed to gaseous refrigerant) into the system.
- If gaseous refrigerant is charged into the system, the composition of the refrigerant in the cylinder will change and may result in performance loss.

4. Amount of refrigerant to be added <PURY>

The amount of refrigerant that is shown in the table below is factory-charged to the outdoor units.
The amount necessary for extended pipe (field piping) is not included and must be added on site.

Outdoor unit model	P72	P96	P108	P126	P144
Amount of pre-charged refrigerant in the outdoor unit (kg[lbs-oz])	10.5[23-3]	13.5[28-11]	13.5[28-11]	16.5[36-7]	16.5[36-7]

Outdoor unit model	P168	P192	P204	P216	P234
Amount of pre-charged refrigerant in the outdoor unit (kg[lbs-oz])	22.0[48-9]	22.0[48-9]	22.0[48-9]	22.0[48-9]	22.0[48-9]

(1) Calculation formula

The amount of refrigerant to be added depends on the size and the length of field piping. (unit in m[ft])

Amount of added refrigerant (kg) = $(0.36 \times L_1) + (0.31 \times L_2) + (0.23 \times L_3) + (0.16 \times L_4) + (0.11 \times L_5) + (0.12 \times L_6) + (0.06 \times L_7) + (0.024 \times L_8) + \alpha_1 + \alpha_2$

Amount of added refrigerant (oz) = $(390 \times L_1') + (3.33 \times L_2') + (2.47 \times L_3') + (1.72 \times L_4') + (1.18 \times L_5') + (1.29 \times L_6') + (0.65 \times L_7') + (0.26 \times L_8') + \alpha_1' + \alpha_2'$

L_1 : Length of ø28.58[1-1/8"] high-pressure pipe (m)
L_2 : Length of ø25.4[1"] high-pressure pipe (m)
L_3 : Length of ø22.2[7/8"] high-pressure pipe (m)
L_4 : Length of ø19.05[3/4"] high-pressure pipe (m)
L_5 : Length of ø15.88[5/8"] high-pressure pipe (m)
L_6 : Length of ø12.7[1/2"] liquid pipe (m)
L_7 : Length of ø9.52[3/8"] liquid pipe (m)
L_8 : Length of ø6.35[1/4"] liquid pipe (m)
α_1, α_1' : Refer to the table below.

L_1' : Length of ø28.58[1-1/8"] high-pressure pipe [ft]
L_2' : Length of ø25.4[1"] high-pressure pipe [ft]
L_3' : Length of ø22.2[7/8"] high-pressure pipe [ft]
L_4' : Length of ø19.05[3/4"] high-pressure pipe [ft]
L_5' : Length of ø15.88[5/8"] high-pressure pipe [ft]
L_6' : Length of ø12.7[1/2"] liquid pipe [ft]
L_7' : Length of ø9.52[3/8"] liquid pipe [ft]
L_8' : Length of ø6.35[1/4"] liquid pipe [ft]
α_2, α_2' : Refer to the table below.

Total capacity of connected indoor units	α_1(kg)	α_1'(oz)
- 30	1.0	36
31 - 60	1.5	53
61 - 126	2.0	71
127 - 180	2.5	89
181 - 234	3.0	106
235 - 264	4.0	142
265 - 366	5.0	178
367 - 468	6.0	212

Total number of sub BC controllers	α_2(kg)	α_2'(oz)
1	1.0	36
2	2.0	71

Round up the calculation result to the nearest 0.01kg. (Example: 15.78g to 15.8kg)
Round up the calculation result in increments of 4oz (0.1kg) or round it up to the nearest 1oz.
(Example: 552.5oz to 556oz or 553oz)

(2) Example

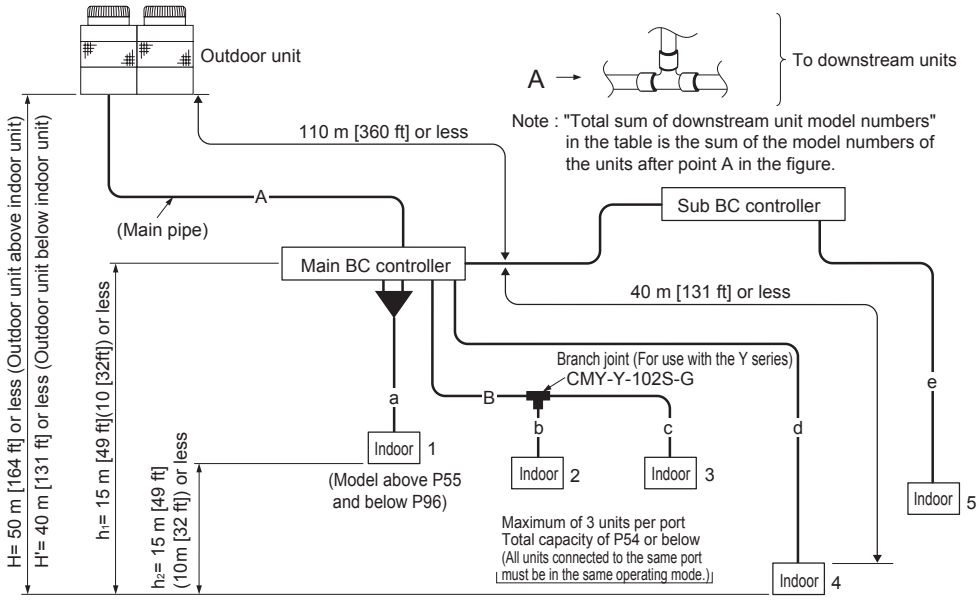

(3) Sample calculation

When
- Outdoor unit: 168 model
- Indoor unit 1: 96 model
- 2: 24 model
- 3: 18 model
- 4: 48 model
- 5: 06 model

A: 22.2 [7/8"] 40 m [131 ft]
B: 9.52 [3/8"] 10 m [32 ft]

a: ϕ9.52 [3/8"] 10 m [32 ft]
b: ϕ9.52 [3/8"] 5 m [16 ft]
c: ϕ6.35 [1/4"] 10 m [32 ft]
d: ϕ9.52 [3/8"] 10 m [32 ft]
e: ϕ6.35 [1/4"] 10 m [32 ft]

The aggregate length of each liquid pipe type.

ϕ19.05 [3/4"] : A = 40 m [130 ft]

ϕ9.52 [3/8"] : B + a + b + d = 35 m [112 ft]

ϕ6.35 [1/4"] : c + e = 20 m[65 ft]

According to the above formula

Amount of refrigerant to be charged (kg) = (0.23 X 40) + (0.06 X 35) + (0.024 X 20) + 3 + 1 = 15.78kg

The calculation result would be 15.78, and it is rounded up to the nearest 0.1.

The final result will be as follows:

Amount of refrigerant to be charged = 15.8kg

Amount of refrigerant to be charged (oz) = (2.47 X 130) + (0.65 X 112) + (0.26 X 65) + 106 + 36 = 552.8oz

The calculation result would be 552.8oz, and it is rounded up to the nearest 1 oz or 4 oz.

The final result will be as follows:

Amount of refrigerant to be charged = 556oz or 553oz

[5] Refrigerant Amount Adjust Mode

1. Procedures <PUHY>

Follow the procedures below to add or extract refrigerant as necessary depending on the operation mode.

When the function switch switches (SW2-4) on the main board on the outdoor unit are turned to ON, the unit will go into the refrigerant amount adjust mode.

Operation	When the unit is in the refrigerant amount adjust mode, the LEV on the indoor unit does not open as fully as it normally does during cooling operation to secure subcooling.

Notes:

1) There may be cases when the refrigerant amount may seem adequate for a short while after starting the unit in the refrigerant amount adjust mode but turn out to be inadequate later on (when the refrigerant system stabilizes).
   [When the amount of refrigerant is truly adequate.]
   TH5-TH7 on the indoor unit is 5K[9°F] or above and SH on the indoor unit is between 5 and 15K[9 and 27°F].
   [The refrigerant amount may seem adequate at the moment, but may turn out to be inadequate later on.]
   TH5-TH7 on the indoor unit is 5K[9°F] or less and SH on the indoor unit is 5K[9°F] or less.
   Wait until the TH5-TH7 reaches 5K[9°F] or above and the SH of the indoor unit is between 5 and 15K[9 and 27°F] to determine that the refrigerant amount is adequate.
2) High pressure must be at least 2.0MPa[290psi] to enable a proper adjustment of refrigerant amount to be made.
3) Adjust the refrigerant amount based on the values of TH1, TH5, TH7, and Tc and by following the flow chart below. TH1, TH5, TH7, and Tc can be displayed by setting the self-diagnosis switch (SW1) on the main board on the outdoor unit.
4) Refrigerant amount adjust mode automatically ends 90 minutes after beginning. When this happens, by turning off the SW2-4 and turning them back on, the unit will go back into the refrigerant amount adjust mode.

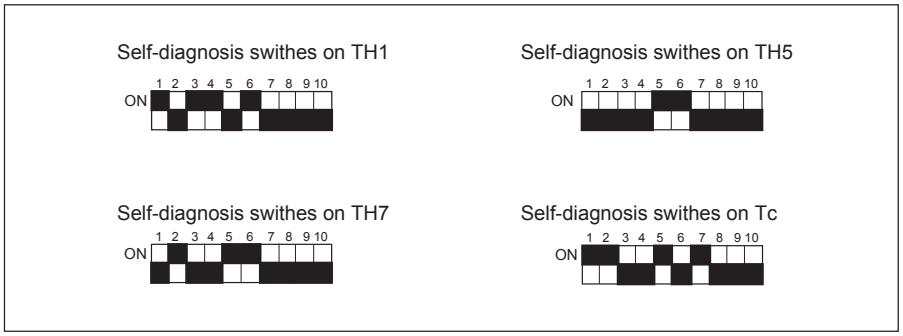

Use these switches to figure out the values of TH1, TC - TH5, and Tc - H7.

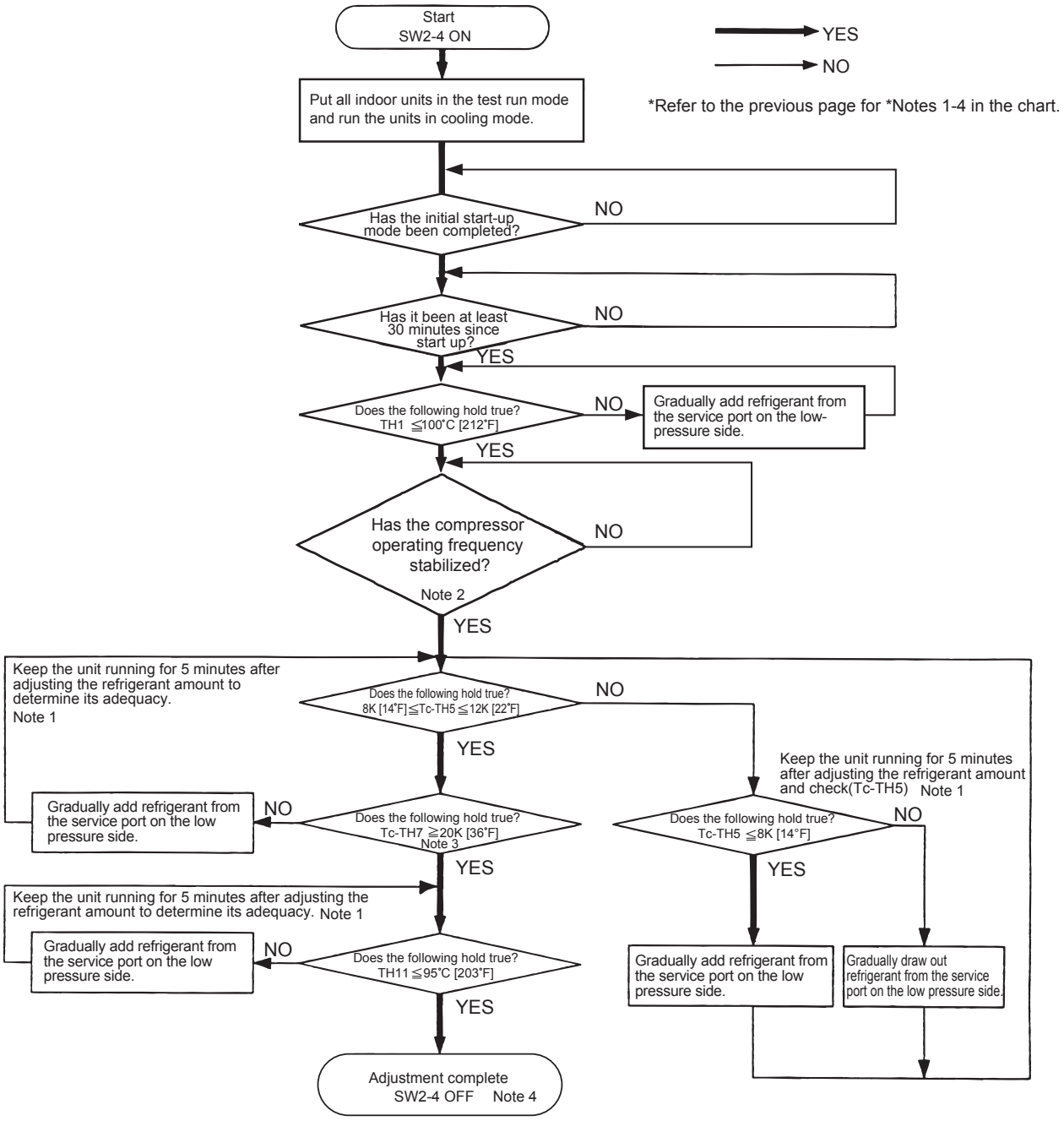

⚠ **CAUTION**
Do not release the extracted refrigerant into the air.

⚠ **CAUTION**
Charge liquid refrigerant (as opposed to gaseous refrigerant) into the system.
- If gaseous refrigerant is charged into the system, the composition of the refrigerant in the cylinder will change and may result in performance loss.

2. Procedures <PURY>

Follow the procedures below to add or extract refrigerant as necessary depending on the operation mode.

When the function switch switches (SW2-4) on the main board on the outdoor unit are turned to ON, the unit will go into the refrigerant amount adjust mode.

Operation	♦When the unit is in the refrigerant amount adjust mode, the LEV on the indoor unit does not open as fully as it normally does during cooling operation to secure subcooling. ♦Control of oil balance, oil recovery, and refrigerant recovery will be disabled only during cooling operation. ♦Normal operation will be performed during heating only and heating main operations.

Notes:

1) There may be cases when the refrigerant amount may seem adequate for a short while after starting the unit in the refrigerant amount adjust mode but turn out to be inadequate later on (when the refrigerant system stabilizes).
   [When the amount of refrigerant is truly adequate.]
   The subcooling of BC controller (SC11, SC16) is at or above 5K[9°F], and the SH of the indoor unit is between 5 and 15K[9 and 27°F].
   [The refrigerant amount may seem adequate at the moment, but may turn out to be inadequate later on.]
   The subcooling of BC controller (SC11, SC16) is below 5K[9°F], or the SH of the indoor unit is below 5K[9°F].
   ♦Wait until the subcooling of BC controller reaches 5K[9°F] or above and the SH of the indoor unit is between 5 and 15K[9 and 27°F] to determine that the refrigerant amount is adequate.
   ♦SC11: BC controller inlet liquid refrigerant subcool,
   SC16: BC controller outlet liquid refrigerant subcool
2) High pressure must be at least 2.0MPa[290psi] to enable a proper adjustment of refrigerant amount to be made.
3) Adjust the refrigerant amount based on the values of TH11 and by following the flow chart below. TH11, SC11, and SC16 can be displayed by setting the self-diagnosis switch (SW1) on the main board on the outdoor unit.
4) Refrigerant amount adjust mode automatically ends 90 minutes after beginning. When this happens, by turning off the SW2-4 and turning them back on, the unit will go back into the refrigerant amount adjust mode.

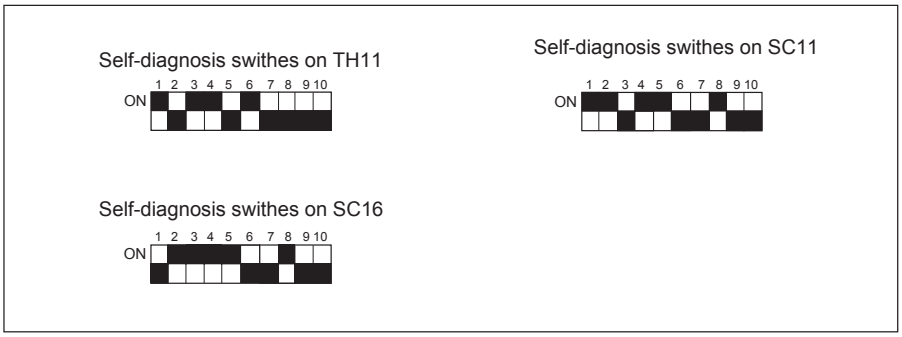

Use these switches to figure out the values of TH11, SC11, and SC16.

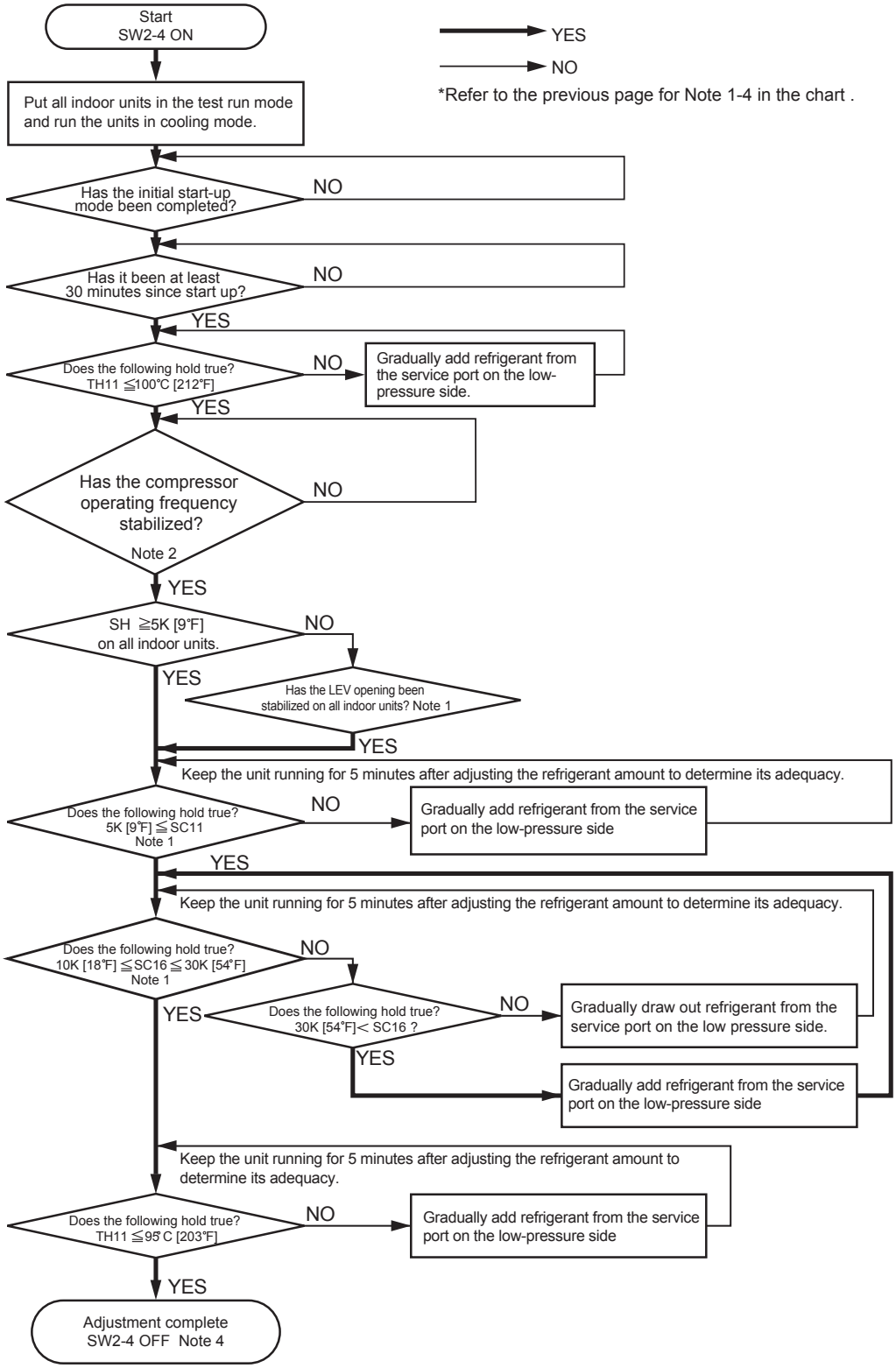

⚠ **CAUTION**
Do not release the extracted refrigerant into the air.

⚠ **CAUTION**
Charge liquid refrigerant (as opposed to gaseous refrigerant) into the system.
- If gaseous refrigerant is charged into the system, the composition of the refrigerant in the cylinder will change and may result in performance loss.

[6] The following symptoms are normal.

Symptoms	Remote controller display	Cause
The indoor unit does not start after starting cooling (heating) operation.	**"Cooling (heating)" icon blinks on the display.**	The unit cannot perform a heating (cooling) operation when other indoor units are performing a cooling (heating) operation.
The auto vane adjusts its position by itself.	**Normal display**	After an hour of cooling operation with the auto vane in the vertical position, the vane may automatically move into the horizontal position. Louver blades will automatically move into the horizontal position while the unit is in the defrost mode, pre-heating stand-by mode, or when the thermostat triggers unit off.
The fan stops during heating operation.	**Defrost**	The fan remains stopped during defrost operation.
The fan keeps running after the unit has stopped.	**Display is off.**	When the auxiliary heater is turned on, the fan operates for one minute after stopping to dissipate heat.
The fan speed does not reach the set speed when operation switch is turned on.	**STAND BY**	The fan operates at extra low speed for 5 minutes after it is turned on or until the pipe temperature reaches 35°C[95°F], then it operates at low speed for 2 minutes, and finally it operates at the set speed. (Pre-heating stand-by)
When the main power is turned on, the display shown on the right appears on the indoor unit remote controller for 5 minutes.	**"HO" or "PLEASE WAIT" icons blink on the display.**	The system is starting up. Wait until the blinking display of "HO" or "PLEASE WAIT" go off.
Indoor unit and BC controller make noise during cooling/ heating changeover.	**Normal display**	This noise is made when the refrigerant circuit is reversed and is normal.
Sound of the refrigerant flow is heard from the indoor unit immediately after starting operation.	**Normal display**	This is caused by the transient instability of the refrigerant flow and is normal.

[7] Standard Operation Data (Reference Data)

1. PUHY <SI unit>

(1) Cooling operation

Operation				Outdoor unit model							
				PUHY-P72TGMU-A				PUHY-P96TGMU-A			
Operating conditions	Ambient temperature	Indoor	DB/WB °C	26.7/19.4				26.7/19.4			
		Outdoor		35.0/-				35.0/-			
	Indoor unit	No. of connected units	Unit	4				4			
		No. of units in operation		4				4			
		Model	-	27	24	18	06	36	27	24	06
	Piping	Main pipe	m	5				5			
		Branch pipe		10				10			
		Total pipe length		45				45			
	Fan speed		-	Hi				Hi			
	Amount of refrigerant		kg	11.0				13.9			
Outdoor unit	Electric current		A	19.9/18.0				26.7/24.1			
	Voltage		V	208/230				208/230			
	Compressor frequency		Hz	53				70			
LEV opening	Indoor unit		Pulse	253	441	362	187	325	253	441	187
	SC (LEV1)			82				100			
Pressure	High pressure (after O/S)/low pressure (before accumulator)		MPa	3.00/0.92				2.87/0.96			
Temp. of each section	Outdoor unit	Discharge (TH11)	°C	84				86			
		Heat exchanger outlet (TH5)		39				41			
		Accumulator Inlet		14				14			
		Accumulator Outlet		14				14			
		Compressor inlet		27				23			
		Compressor shell bottom		39				39			
		SC heat exchanger outlet (TH7)		19				20			
		Bypass outlet (TH8)		10				11			
	Indoor unit	LEV inlet		19				19			
		Heat exchanger outlet		13				13			

Operation				Outdoor unit model							
				PUHY-P108TGMU-A				PUHY-P126TGMU-A			
Operating conditions	Ambient temperature	Indoor	DB/WB °C	26.7/19.4				26.7/19.4			
		Outdoor		35.0/-				35.0/-			
	Indoor unit	No. of connected units	Unit	4				4			
		No. of units in operation		4				4			
		Model	-	48	30	24	12	54	48	24	12
	Piping	Main pipe	m	5				5			
		Branch pipe		10				10			
		Total pipe length		45				45			
	Fan speed		-	Hi				Hi			
	Amount of refrigerant		kg	13.9				14.7			
Outdoor unit	Electric current		A	30.0/27.1				35.0/31.6			
	Voltage		V	208/230				208/230			
	Compressor frequency		Hz	77				89			
LEV opening	Indoor unit		Pulse	387	275	441	261	373	387	441	261
	SC (LEV1)			123				140			
Pressure	High pressure (after O/S)/low pressure (before accumulator)		MPa	3.05/0.92				3.21/0.87			
Temp. of each section	Outdoor unit	Discharge (TH11)	°C	83				88			
		Heat exchanger outlet (TH5)		46				46			
		Accumulator Inlet		14				14			
		Accumulator Outlet		14				14			
		Compressor inlet		22				24			
		Compressor shell bottom		44				49			
		SC heat exchanger outlet (TH7)		21				25			
		Bypass outlet (TH8)		10				10			
	Indoor unit	LEV inlet		20				24			
		Heat exchanger outlet		13				13			

Operation				Outdoor unit model							
				PUHY-P144TGMU-A				PUHY-P168TGMU-A			
Operating conditions	Ambient temperature	Indoor	DB/WB °C	26.7/19.4				26.7/19.4			
		Outdoor		35.0/-				35.0/-			
	Indoor unit	No. of connected units	Unit	4				4			
		No. of units in operation		4				4			
		Model	-	72	36	24	12	72	48	30	18
	Piping	Main pipe	m	5				5			
		Branch pipe		10				10			
		Total pipe length		45				45			
	Fan speed		-	Hi				Hi			
	Amount of refrigerant		kg	18.2				21.6			
Outdoor unit	Electric current		A	43.8/39.6				46.1/41.7			
	Voltage		V	208/230				208/230			
	Compressor frequency (No.1/No.2)		Hz	103				65/60			
LEV opening	Indoor unit		Pulse	324	325	441	261	324	387	275	362
	SC (LEV1)			164				183			
Pressure	High pressure (after O/S)/low pressure (before accumulator)		MPa	2.91/0.94				2.95/0.86			
Temp. of each section	Outdoor unit	Discharge (TH11/TH12)	°C	86				82/85			
		Heat exchanger outlet (TH5)		45				41			
		Accumulator Inlet		16				15			
		Accumulator Outlet		16				15			
		Compressor inlet		23				21/17			
		Compressor shell bottom		48				33/42			
		SC heat exchanger outlet (TH7)		27				25			
		Bypass outlet (TH8)		11				9			
	Indoor unit	LEV inlet		26				24			
		Heat exchanger outlet		15				13			

Operation				Outdoor unit model							
				PUHY-P192TGMU-A				PUHY-P204TGMU-A			
Operating conditions	Ambient temperature	Indoor	DB/WB °C	26.7/19.4				26.7/19.4			
		Outdoor		35.0/-				35.0/-			
	Indoor unit	No. of connected units	Unit	4				4			
		No. of units in operation		4				4			
		Model	-	96	48	36	12	96	54	48	18
	Piping	Main pipe	m	5				5			
		Branch pipe		10				10			
		Total pipe length		45				45			
	Fan speed		-	Hi				Hi			
	Amount of refrigerant		kg	22.1				28.1			
Outdoor unit	Electric current		A	53.4/48.3				57.7/52.1			
	Voltage		V	208/230				208/230			
	Compressor frequency (No.1/No.2)		Hz	78/60				88/60			
LEV opening	Indoor unit		Pulse	388	387	325	261	388	373	387	362
	SC (LEV1)			204				226			
Pressure	High pressure (after O/S)/low pressure (before accumulator)		MPa	3.02/0.86				2.85/0.85			
Temp. of each section	Outdoor unit	Discharge (TH11/TH12)	°C	84/87				84/87			
		Heat exchanger outlet (TH5)		42				40			
		Accumulator Inlet		15				15			
		Accumulator Outlet		15				15			
		Compressor inlet		21/17				19/17			
		Compressor shell bottom		37/42				42/42			
		SC heat exchanger outlet (TH7)		25				24			
		Bypass outlet (TH8)		8				8			
	Indoor unit	LEV inlet		24				23			
		Heat exchanger outlet		13				13			

Operation				Outdoor unit model									
				PUHY-P216TGMU-A					PUHY-P234TGMU-A				
Operating conditions	Ambient temperature	Indoor	DB/WB °C	26.7/19.4					26.7/19.4				
		Outdoor		35.0/-					35.0/-				
	Indoor unit	No. of connected units	Unit	5					5				
		No. of units in operation		5					5				
		Model	-	72	72	48	18	08	96	72	48	18	08
	Piping	Main pipe	m	5					5				
		Branch pipe		10					10				
		Total pipe length		55					55				
	Fan speed		-	Hi					Hi				
	Amount of refrigerant		kg	28.3					29.3				
Outdoor unit	Electric current		A	61.4/55.5					66.6/60.3				
	Voltage		V	208/230					208/230				
	Compressor frequency (No.1/No.2)		Hz	98/60					107/60				
LEV opening	Indoor unit		Pulse	324	324	387	362	222	388	324	387	362	222
	SC (LEV1)			246					266				
Pressure	High pressure (after O/S)/low pressure (before accumulator)		MPa	2.93/0.84					3.03/0.83				
Temp. of each section	Outdoor unit	Discharge (TH11/TH12)	°C	84/86					86/86				
		Heat exchanger outlet (TH5)		41					43				
		Accumulator Inlet		15					14				
		Accumulator Outlet		15					14				
		Compressor inlet		19/17					18/15				
		Compressor shell bottom		47/43					53/49				
		SC heat exchanger outlet (TH7)		24					26				
		Bypass outlet (TH8)		8					7				
	Indoor unit	LEV inlet		24					24				
		Heat exchanger outlet		12					12				

(2) Heating operation

Operation				Outdoor unit model							
				PUHY-P72TGMU-A				PUHY-P96TGMU-A			
Operating conditions	Ambient temperature	Indoor	DB/WB °C	21.1/-				21.1/-			
		Outdoor		8.3/6.1				8.3/6.1			
	Indoor unit	No. of connected units	Unit	4				4			
		No. of units in operation		4				4			
		Model	-	27	24	18	06	36	27	24	06
	Piping	Main pipe	m	5				5			
		Branch pipe		10				10			
		Total pipe length		45				45			
	Fan speed		-	Hi				Hi			
	Amount of refrigerant		kg	11.0				13.9			
Outdoor unit	Electric current		A	19.5/17.6				26.4/23.8			
	Voltage		V	208/230				208/230			
	Compressor frequency		Hz	55				73			
LEV opening	Indoor unit		Pulse	259	455	373	194	332	259	455	194
	SC (LEV1)			-				-			
Pressure	High pressure (after O/S)/low pressure (before accumulator)		MPa	2.82/0.67				2.70/0.65			
Temp. of each section	Outdoor unit	Discharge (TH11)	°C	79				76			
		Heat exchanger outlet (TH5)		1				1			
		Accumulator Inlet		0				0			
		Accumulator Outlet		0				0			
		Compressor inlet		1				1			
		Compressor shell bottom		23				23			
	Indoor unit	LEV inlet		38				35			
		Heat exchanger outlet		74				72			

Operation				Outdoor unit model							
				PUHY-P108TGMU-A				PUHY-P126TGMU-A			
Operating conditions	Ambient temperature	Indoor	DB/WB °C	21.1/-				21.1/-			
		Outdoor		8.3/6.1				8.3/6.1			
	Indoor unit	No. of connected units	Unit	4				4			
		No. of units in operation		4				4			
		Model	-	48	30	24	12	54	48	24	12
	Piping	Main pipe	m	5				5			
		Branch pipe		10				10			
		Total pipe length		45				45			
	Fan speed		-	Hi				Hi			
	Amount of refrigerant		kg	13.9				14.7			
Outdoor unit	Electric current		A	30.6/27.6				36.0/32.5			
	Voltage		V	208/230				208/230			
	Compressor frequency		Hz	84				93			
LEV opening	Indoor unit		Pulse	406	280	455	254	384	406	455	254
	SC (LEV1)			-				-			
Pressure	High pressure (after O/S)/low pressure (before accumulator)		MPa	2.70/0.65				2.71/0.67			
Temp. of each section	Outdoor unit	Discharge (TH11)	°C	76				76			
		Heat exchanger outlet (TH5)		1				2			
		Accumulator Inlet		0				-1			
		Accumulator Outlet		0				-1			
		Compressor inlet		2				0			
		Compressor shell bottom		27				31			
	Indoor unit	LEV inlet		35				35			
		Heat exchanger outlet		72				72			

Operation				Outdoor unit model							
				PUHY-P144TGMU-A				PUHY-P168TGMU-A			
Operating conditions	Ambient temperature	Indoor	DB/WB °C	21.1/-				21.1/-			
		Outdoor		8.3/6.1				8.3/6.1			
	Indoor unit	No. of connected units	Unit	4				4			
		No. of units in operation		4				4			
		Model	-	72	36	24	12	72	48	30	18
	Piping	Main pipe	m	5				5			
		Branch pipe		10				10			
		Total pipe length		45				45			
	Fan speed		-	Hi				Hi			
	Amount of refrigerant		kg	18.2				21.6			
Outdoor unit	Electric current		A	42.1/38.1				46.3/41.9			
	Voltage		V	208/230				208/230			
	Compressor frequency (No.1/No.2)		Hz	103				62/60			
LEV opening	Indoor unit		Pulse	332	332	455	254	332	406	280	373
	SC (LEV1)			-				-			
Pressure	High pressure (after O/S)/low pressure (before accumulator)		MPa	2.43/0.68				2.83/0.69			
Temp. of each section	Outdoor unit	Discharge (TH11/TH12)	°C	71				75/78			
		Heat exchanger outlet (TH5)		2				4			
		Accumulator Inlet		0				1			
		Accumulator Outlet		0				1			
		Compressor inlet		-1				1/1			
		Compressor shell bottom		30				23/27			
	Indoor unit	LEV inlet		31				38			
		Heat exchanger outlet		67				71			

Operation				Outdoor unit model							
				PUHY-P192TGMU-A				PUHY-P204TGMU-A			
Operating conditions	Ambient temperature	Indoor	DB/WB °C	21.1/-				21.1/-			
		Outdoor		8.3/6.1				8.3/6.1			
	Indoor unit	No. of connected units	Unit	4				4			
		No. of units in operation		4				4			
		Model	-	96	48	36	12	96	54	48	18
	Piping	Main pipe	m	5				5			
		Branch pipe		10				10			
		Total pipe length		45				45			
	Fan speed		-	Hi				Hi			
	Amount of refrigerant		kg	22.1				28.1			
Outdoor unit	Electric current		A	53.9/48.7				57.5/52.0			
	Voltage		V	208/230				208/230			
	Compressor frequency (No.1/No.2)		Hz	82/60				93/60			
LEV opening	Indoor unit		Pulse	400	406	332	254	400	384	406	373
	SC (LEV1)			-				-			
Pressure	High pressure (after O/S)/low pressure (before accumulator)		MPa	2.89/0.68				2.83/0.69			
Temp. of each section	Outdoor unit	Discharge (TH11/TH12)	°C	76/81				76/79			
		Heat exchanger outlet (TH5)		4				4			
		Accumulator Inlet		1				1			
		Accumulator Outlet		1				1			
		Compressor inlet		1/1				1/1			
		Compressor shell bottom		24/27				26/29			
	Indoor unit	LEV inlet		39				38			
		Heat exchanger outlet		72				72			

Operation				Outdoor unit model									
				PUHY-P216TGMU-A					PUHY-P234TGMU-A				
Operating conditions	Ambient temperature	Indoor	DB/WB °C	21.1/-					21.1/-				
		Outdoor		8.3/6.1					8.3/6.1				
	Indoor unit	No. of connected units	Unit	5					5				
		No. of units in operation		5					5				
		Model	-	72	72	48	18	08	96	72	48	18	08
	Piping	Main pipe	m	5					5				
		Branch pipe		10					10				
		Total pipe length		55					55				
	Fan speed		-	Hi					Hi				
	Amount of refrigerant		kg	28.3					29.3				
Outdoor unit	Electric current		A	64.8/58.6					71.2/64.4				
	Voltage		V	208/230					208/230				
	Compressor frequency (No.1/No.2)		Hz	105/60					113/60				
LEV opening	Indoor unit		Pulse	332	332	406	373	229	400	332	406	373	229
	SC (LEV1)			-					-				
Pressure	High pressure (after O/S)/low pressure (before accumulator)		MPa	2.85/0.66					2.86/0.63				
Temp. of each section	Outdoor unit	Discharge (TH11/TH12)	°C	79/82					83/85				
		Heat exchanger outlet (TH5)		3					1				
		Accumulator Inlet		0					-1				
		Accumulator Outlet		0					-1				
		Compressor inlet		-1/-1					-2/-2				
		Compressor shell bottom		26/29					29/31				
	Indoor unit	LEV inlet		38					38				
		Heat exchanger outlet		74					77				

2. PUHY <US unit of measure>

(1) Cooling operation

Operation					Outdoor unit model							
					PUHY-P72TGMU-A				PUHY-P96TGMU-A			
Operating conditions	Ambient temperature	Indoor		DB/WB °F	80/67				80/67			
		Outdoor			95/-				95/-			
	Indoor unit	No. of connected units		Unit	4				4			
		No. of units in operation			4				4			
		Model		-	27	24	18	06	36	27	24	06
	Piping	Main pipe		Ft	16				16			
		Branch pipe			32				32			
		Total pipe length			147				147			
	Fan speed			-	Hi				Hi			
	Amount of refrigerant			lbs-oz	24-4				30-10			
Outdoor unit	Electric current			A	19.9/18.0				26.7/24.1			
	Voltage			V	208/230				208/230			
	Compressor frequency			Hz	53				70			
LEV opening	Indoor unit			Pulse	253	441	362	187	325	253	441	187
	SC (LEV1)				82				100			
Pressure	High pressure (after O/S)/low pressure (before accumulator)			psi	435/133				416/139			
Temp. of each section	Outdoor unit	Discharge (TH11)		°F	183				187			
		Heat exchanger outlet (TH5)			102				106			
		Accumulator	Inlet		57				57			
			Outlet		57				57			
		Compressor inlet			81				73			
		Compressor shell bottom			176				102			
		SC heat exchanger outlet (TH7)			66				68			
		Bypass outlet (TH8)			50				52			
	Indoor unit	LEV inlet			66				66			
		Heat exchanger outlet			55				55			

Operation				Outdoor unit model							
				PUHY-P108TGMU-A				PUHY-P126TGMU-A			
Operating conditions	Ambient temperature	Indoor	DB/WB °F	80/67				80/67			
		Outdoor		95/-				95/-			
	Indoor unit	No. of connected units	Unit	4				4			
		No. of units in operation		4				4			
		Model	-	48	30	24	12	54	48	24	12
	Piping	Main pipe	Ft	16				16			
		Branch pipe		32				32			
		Total pipe length		147				147			
	Fan speed		-	Hi				Hi			
	Amount of refrigerant		lbs-oz	30-10				32-6			
Outdoor unit	Electric current		A	30.0/27.1				35.0/31.6			
	Voltage		V	208/230				208/230			
	Compressor frequency		Hz	77				89			
LEV opening	Indoor unit		Pulse	387	275	441	261	373	387	441	261
	SC (LEV1)			123				140			
Pressure	High pressure (after O/S)/low pressure (before accumulator)		psi	442/133				466/126			
Temp. of each section	Outdoor unit	Discharge (TH11)	°F	181				190			
		Heat exchanger outlet (TH5)		115				115			
		Accumulator Inlet		57				57			
		Accumulator Outlet		57				57			
		Compressor inlet		72				75			
		Compressor shell bottom		111				120			
		SC heat exchanger outlet (TH7)		70				77			
		Bypass outlet (TH8)		50				50			
	Indoor unit	LEV inlet		68				75			
		Heat exchanger outlet		55				55			

Operation				Outdoor unit model							
				PUHY-P144TGMU-A				PUHY-P168TGMU-A			
Operating conditions	Ambient temperature	Indoor	DB/WB °F	80/67				80/67			
		Outdoor		95/-				95/-			
	Indoor unit	No. of connected units	Unit	4				4			
		No. of units in operation		4				4			
		Model	-	72	36	24	12	72	48	30	18
	Piping	Main pipe	Ft	16				16			
		Branch pipe		32				32			
		Total pipe length		147				147			
	Fan speed		-	Hi				Hi			
	Amount of refrigerant		lbs-oz	40-2				47-10			
Outdoor unit	Electric current		A	43.8/39.6				46.1/41.7			
	Voltage		V	208/230				208/230			
	Compressor frequency (No.1/No.2)		Hz	103				65/60			
LEV opening	Indoor unit		Pulse	324	325	441	261	324	387	275	362
	SC (LEV1)			164				183			
Pressure	High pressure (after O/S)/low pressure (before accumulator)		psi	422/136				428/125			
Temp. of each section	Outdoor unit	Discharge (TH11/TH12)	°F	187				180/185			
		Heat exchanger outlet (TH5)		113				106			
		Accumulator Inlet		61				59			
		Accumulator Outlet		61				59			
		Compressor inlet		73				70/63			
		Compressor shell bottom		118				91/108			
		SC heat exchanger outlet (TH7)		81				77			
		Bypass outlet (TH8)		52				48			
	Indoor unit	LEV inlet		79				75			
		Heat exchanger outlet		59				55			

Operation				Outdoor unit model							
				PUHY-P192TGMU-A				PUHY-P204TGMU-A			
Operating conditions	Ambient temperature	Indoor	DB/WB °F	80/67				80/67			
		Outdoor		95/-				95/-			
	Indoor unit	No. of connected units	Unit	4				4			
		No. of units in operation		4				4			
		Model	-	96	48	36	12	96	54	48	18
	Piping	Main pipe	Ft	16				16			
		Branch pipe		32				32			
		Total pipe length		147				147			
	Fan speed		-	Hi				Hi			
	Amount of refrigerant		lbs-oz	48-11				61-14			
Outdoor unit	Electric current		A	53.4/48.3				57.7/52.1			
	Voltage		V	208/230				208/230			
	Compressor frequency (No.1/No.2)		Hz	78/60				88/60			
LEV opening	Indoor unit		Pulse	388	387	325	261	388	373	387	362
	SC (LEV1)			204				226			
Pressure	High pressure (after O/S)/low pressure (before accumulator)		psi	438/125				413/123			
Temp. of each section	Outdoor unit	Discharge (TH11/TH12)	°F	183/189				183/189			
		Heat exchanger outlet (TH5)		108				104			
		Accumulator Inlet		59				59			
		Accumulator Outlet		59				59			
		Compressor inlet		70/63				66/63			
		Compressor shell bottom		99/108				108/108			
		SC heat exchanger outlet (TH7)		77				75			
		Bypass outlet (TH8)		46				46			
	Indoor unit	LEV inlet		75				73			
		Heat exchanger outlet		55				55			

Operation				Outdoor unit model									
				PUHY-P216TGMU-A					PUHY-P234TGMU-A				
Operating conditions	Ambient temperature	Indoor	DB/WB °F	80/67					80/67				
		Outdoor		95/-					95/-				
	Indoor unit	No. of connected units	Unit	5					5				
		No. of units in operation		5					5				
		Model	-	72	72	48	18	08	96	72	48	18	08
	Piping	Main pipe	Ft	16					16				
		Branch pipe		32					32				
		Total pipe length		180					180				
	Fan speed		-	Hi					Hi				
	Amount of refrigerant		lbs-oz	62-6					64-9				
Outdoor unit	Electric current		A	61.4/55.5					66.6/60.3				
	Voltage		V	208/230					208/230				
	Compressor frequency (No.1/No.2)		Hz	98/60					107/60				
LEV opening	Indoor unit		Pulse	324	324	387	362	222	388	324	387	362	222
	SC (LEV1)			246					266				
Pressure	High pressure (after O/S)/low pressure (before accumulator)		psi	425/122					439/120				
Temp. of each section	Outdoor unit	Discharge (TH11/TH12)	°F	183/187					187/187				
		Heat exchanger outlet (TH5)		106					109				
		Accumulator Inlet		59					57				
		Accumulator Outlet		59					57				
		Compressor inlet		66/63					64/59				
		Compressor shell bottom		117/109					127/120				
		SC heat exchanger outlet (TH7)		75					79				
		Bypass outlet (TH8)		46					45				
	Indoor unit	LEV inlet		75					75				
		Heat exchanger outlet		54					54				

(2) Heating operation

Operation				Outdoor unit model							
				PUHY-P72TGMU-A				PUHY-P96TGMU-A			
Operating conditions	Ambient temperature	Indoor	DB/WB °F	70/-				70/-			
		Outdoor		47/43				47/43			
	Indoor unit	No. of connected units	Unit	4				4			
		No. of units in operation		4				4			
		Model	-	27	24	18	06	36	27	24	06
	Piping	Main pipe	Ft	16				16			
		Branch pipe		32				32			
		Total pipe length		147				147			
	Fan speed		-	Hi				Hi			
	Amount of refrigerant		lbs-oz	24-4				30-12			
Outdoor unit	Electric current		A	19.5/17.6				26.4/23.8			
	Voltage		V	208/230				208/230			
	Compressor frequency		Hz	55				73			
LEV opening	Indoor unit		Pulse	259	455	373	194	332	259	455	194
	SC (LEV1)			-				-			
Pressure	High pressure (after O/S)/low pressure (before accumulator)		psi	409/97				392/94			
Temp. of each section	Outdoor unit	Discharge (TH11)	°F	174				169			
		Heat exchanger outlet (TH5)		34				34			
		Accumulator Inlet		32				32			
		Accumulator Outlet		32				32			
		Compressor inlet		54				34			
		Compressor shell bottom		163				73			
	Indoor unit	LEV inlet		100				95			
		Heat exchanger outlet		165				162			

Operation				Outdoor unit model							
				PUHY-P108TGMU-A				PUHY-P126TGMU-A			
Operating conditions	Ambient temperature	Indoor	DB/WB °F	70/-				70/-			
		Outdoor		47/43				47/43			
	Indoor unit	No. of connected units	Unit	4				4			
		No. of units in operation		4				4			
		Model	-	48	30	24	12	54	48	24	12
	Piping	Main pipe	Ft	16				16			
		Branch pipe		32				32			
		Total pipe length		147				147			
	Fan speed		-	Hi				Hi			
	Amount of refrigerant		lbs-oz	30-12				32-6			
Outdoor unit	Electric current		A	30.6/27.6				36.0/32.5			
	Voltage		V	208/230				208/230			
	Compressor frequency		Hz	84				93			
LEV opening	Indoor unit		Pulse	406	280	455	254	384	406	455	254
	SC (LEV1)			-				-			
Pressure	High pressure (after O/S)/low pressure (before accumulator)		psi	392/94				393/97			
Temp. of each section	Outdoor unit	Discharge (TH11)	°F	169				169			
		Heat exchanger outlet (TH5)		34				36			
		Accumulator Inlet		32				30			
		Accumulator Outlet		32				30			
		Compressor inlet		36				32			
		Compressor shell bottom		81				88			
	Indoor unit	LEV inlet		95				95			
		Heat exchanger outlet		162				162			

Operation				Outdoor unit model							
				PUHY-P144TGMU-A				PUHY-P168TGMU-A			
Operating conditions	Ambient temperature	Indoor	DB/WB °F	70/-				70/-			
		Outdoor		47/43				47/43			
	Indoor unit	No. of connected units	Unit	4				4			
		No. of units in operation		4				4			
		Model	-	72	36	24	12	72	48	30	18
	Piping	Main pipe	Ft	16				16			
		Branch pipe		32				32			
		Total pipe length		147				147			
	Fan speed		-	Hi				Hi			
	Amount of refrigerant		lbs-oz	40-2				47-10			
Outdoor unit	Electric current		A	42.1/38.1				46.3/41.9			
	Voltage		V	208/230				208/230			
	Compressor frequency (No.1/No.2)		Hz	103				62/60			
LEV opening	Indoor unit		Pulse	332	332	455	254	332	406	280	373
	SC (LEV1)			-				-			
Pressure	High pressure (after O/S)/low pressure (before accumulator)		psi	352/99				410/100			
Temp. of each section	Outdoor unit	Discharge (TH11/TH12)	°F	160				167/172			
		Heat exchanger outlet (TH5)		36				39			
		Accumulator Inlet		32				34			
		Accumulator Outlet		32				34			
		Compressor inlet		30				34/34			
		Compressor shell bottom		86				73/81			
	Indoor unit	LEV inlet		88				100			
		Heat exchanger outlet		153				160			

Operation				Outdoor unit model							
				PUHY-P192TGMU-A				PUHY-P204TGMU-A			
Operating conditions	Ambient temperature	Indoor	DB/WB °F	70/-				70/-			
		Outdoor		47/43				47/43			
	Indoor unit	No. of connected units	Unit	4				4			
		No. of units in operation		4				4			
		Model	-	96	48	36	12	96	54	48	18
	Piping	Main pipe	Ft	16				16			
		Branch pipe		32				32			
		Total pipe length		147				147			
	Fan speed		-	Hi				Hi			
	Amount of refrigerant		lbs-oz	48-11				61-14			
Outdoor unit	Electric current		A	53.9/48.7				57.5/52.0			
	Voltage		V	208/230				208/230			
	Compressor frequency (No.1/No.2)		Hz	82/60				93/60			
LEV opening	Indoor unit		Pulse	400	406	332	254	400	384	406	373
	SC (LEV1)			-				-			
Pressure	High pressure (after O/S)/low pressure (before accumulator)		psi	419/99				410/100			
Temp. of each section	Outdoor unit	Discharge (TH11/TH12)	°F	169/178				169/174			
		Heat exchanger outlet (TH5)		39				39			
		Accumulator Inlet		34				34			
		Accumulator Outlet		34				34			
		Compressor inlet		34/34				34/34			
		Compressor shell bottom		75/81				79/84			
	Indoor unit	LEV inlet		102				100			
		Heat exchanger outlet		162				162			

Operation				Outdoor unit model									
				PUHY-P216TGMU-A					PUHY-P234TGMU-A				
Operating conditions	Ambient temperature	Indoor	DB/WB °F	70/-					70/-				
		Outdoor		47/43					47/43				
	Indoor unit	No. of connected units	Unit	5					5				
		No. of units in operation		5					5				
		Model	-	72	72	48	18	08	96	72	48	18	08
	Piping	Main pipe	Ft	16					16				
		Branch pipe		32					32				
		Total pipe length		180					180				
	Fan speed		-	Hi					Hi				
	Amount of refrigerant		lbs-oz	62-6					64-10				
Outdoor unit	Electric current		A	64.8/58.6					71.2/64.4				
	Voltage		V	208/230					208/230				
	Compressor frequency (No.1/No.2)		Hz	105/60					113/60				
LEV opening	Indoor unit		Pulse	332	332	406	373	229	400	332	406	373	229
	SC (LEV1)			-					-				
Pressure	High pressure (after O/S)/low pressure (before accumulator)		psi	413/96					415/91				
Temp. of each section	Outdoor unit	Discharge (TH11/TH12)	°F	174/180					181/185				
		Heat exchanger outlet (TH5)		37					34				
		Accumulator Inlet		32					30				
		Accumulator Outlet		32					30				
		Compressor inlet		30/30					28/28				
		Compressor shell bottom		79/84					84/88				
	Indoor unit	LEV inlet		100					100				
		Heat exchanger outlet		165					171				

3. PURY <SI unit>

(1) Cooling only operation

Operation					Outdoor unit model Model name of BC controller							
					PURY-P72TGMU-A CMB-P104NU-G				PURY-P96TGMU-A CMB-P104NU-G			
Operating conditions	Power supply			V	208/230				208/230			
	Ambient temperature	Indoor		DB/WB °C	26.7/19.4				26.7/19.4			
		Outdoor			35.0/-				35.0/-			
	Indoor unit	No. of connected units		Unit	4				4			
		No. of units in operation			4				4			
		Model		-	27	24	18	06	36	27	24	06
	Piping	Main pipe		m	5				5			
		Branch pipe			10				10			
		Total pipe length			45				45			
	Fan speed			-	Hi				Hi			
	Amount of refrigerant			kg	14.8				18.4			
Outdoor unit	Electric current			A	19.9/18.0				26.7/24.1			
	Voltage			V	208/230				208/230			
	Compressor frequency			Hz	53				70			
LEV opening	Indoor unit			Pulse	253	441	362	187	325	253	441	187
	BC controller (1/2/3)				2000/ - /130				2000/ - /135			
Pressure	High pressure/low pressure			MPa	3.00/0.92				2.87/0.96			
	BC controller on the liquid side/Intermediate part				2.85/2.85				2.72/2.72			
Temp. of each section	Outdoor unit	Discharge (TH11)		°C	84				86			
		Heat exchanger outlet (TH5)			39				41			
		Accumulator	Inlet		14				14			
			Outlet		14				14			
		Compressor inlet			27				23			
		Compressor shell bottom			39				39			
	Indoor unit	LEV inlet			19				19			
		Heat exchanger outlet			13				13			

Operation				Outdoor unit model Model name of BC controller							
				PURY-P108TGMU-A CMB-P104NU-G				PURY-P126TGMU-A CMB-P104NU-G			
Operating conditions	Power supply		V	208/230				208/230			
	Ambient temperature	Indoor	DB/WB °C	26.7/19.4				26.7/19.4			
		Outdoor		35.0/-				35.0/-			
	Indoor unit	No. of connected units	Unit	4				4			
		No. of units in operation		4				4			
		Model	-	48	30	24	12	54	48	24	12
	Piping	Main pipe	m	5				5			
		Branch pipe		10				10			
		Total pipe length		45				45			
	Fan speed		-	Hi				Hi			
	Amount of refrigerant		kg	18.4				18.9			
Outdoor unit	Electric current		A	30.0/27.1				35.0/31.6			
	Voltage		V	208/230				208/230			
	Compressor frequency		Hz	77				89			
LEV opening	Indoor unit		Pulse	387	275	441	261	373	387	441	261
	BC controller (1/2/3)			2000/ - /150				2000/ - /160			
Pressure	High pressure/low pressure		MPa	3.05/0.92				3.21/0.87			
	BC controller on the liquid side/Intermediate part			2.90/2.90				3.04/3.04			
Temp. of each section	Outdoor unit	Discharge (TH11)	°C	83				88			
		Heat exchanger outlet (TH5)		46				46			
		Accumulator Inlet		14				14			
		Accumulator Outlet		14				14			
		Compressor inlet		22				24			
		Compressor shell bottom		44				49			
	Indoor unit	LEV inlet		20				24			
		Heat exchanger outlet		13				13			

Operation					Outdoor unit model Model name of BC controller							
					PURY-P144TGMU-A CMB-P108NU-GA				PURY-P168TGMU-A CMB-P108NU-GA			
Operating conditions	Power supply			V	208/230				208/230			
	Ambient temperature	Indoor		DB/WB °C	26.7/19.4				26.7/19.4			
		Outdoor			35.0/-				35.0/-			
	Indoor unit	No. of connected units		Unit	4				4			
		No. of units in operation			4				4			
		Model		-	72	36	24	12	96	36	24	12
	Piping	Main pipe		m	5				5			
		Branch pipe			10				10			
		Total pipe length			45				45			
	Fan speed			-	Hi				Hi			
	Amount of refrigerant			kg	22.2				27.7			
Outdoor unit	Electric current			A	43.8/39.6				46.1/41.7			
	Voltage			V	208/230				208/230			
	Compressor frequency (No.1 / No.2)			Hz	103				65/60			
LEV opening	Indoor unit			Pulse	324	325	441	261	324	387	275	362
	BC controller (1/2/3)				2000/2000/180				2000/2000/190			
Pressure	High pressure/low pressure			MPa	2.91/0.94				2.75/0.86			
	BC controller on the liquid side/Intermediate part				2.76/2.76				2.60/2.60			
Temp. of each section	Outdoor unit	Discharge (TH11/TH12)		°C	86/-				82/85			
		Heat exchanger outlet (TH5)			45				41			
		Accumulator	Inlet		16				15			
			Outlet		16				15			
		Compressor inlet			23				21/27			
		Compressor shell bottom			48				33/42			
	Indoor unit	LEV inlet			26				24			
		Heat exchanger outlet			15				13			

Operation				Outdoor unit model Model name of BC controller							
				PURY-P192TGMU-A CMB-P108NU-GA				PURY-P204TGMU-A CMB-P108NU-GA			
Operating conditions	Power supply		V	208/230				208/230			
	Ambient temperature	Indoor	DB/WB °C	26.7/19.4				26.7/19.4			
		Outdoor		35.0/-				35.0/-			
	Indoor unit	No. of connected units	Unit	4				4			
		No. of units in operation		4				4			
		Model	-	96	48	36	12	96	48	48	24
	Piping	Main pipe	m	5				5			
		Branch pipe		10				10			
		Total pipe length		45				45			
	Fan speed		-	Hi				Hi			
	Amount of refrigerant		kg	28.2				29.0			
Outdoor unit	Electric current		A	53.4/48.3				57.7/52.1			
	Voltage		V	208/230				208/230			
	Compressor frequency (No.1 / No.2)		Hz	78/60				88/60			
LEV opening	Indoor unit		Pulse	388	387	325	261	388	373	387	362
	BC controller (1/2/3)			2000/2000/200				2000/2000/210			
Pressure	High pressure/low pressure		MPa	2.80/0.86				2.85/0.85			
	BC controller on the liquid side/Intermediate part			2.65/2.65				2.69/2.69			
Temp. of each section	Outdoor unit	Discharge (TH11/TH12)	°C	84/87				82/85			
		Heat exchanger outlet (TH5)		42				40			
		Accumulator Inlet		15				15			
		Accumulator Outlet		15				15			
		Compressor inlet		21/17				19/17			
		Compressor shell bottom		37/42				42/42			
	Indoor unit	LEV inlet		24				23			
		Heat exchanger outlet		13				13			

Operation					Outdoor unit model Model name of BC controller									
					PURY-P216TGMU-A CMB-P108NU-GA					PURY-P234TGMU-A CMB-P108NU-GA				
Operating conditions	Power supply			V	208/230					208/230				
	Ambient temperature	Indoor		DB/WB °C	26.7/19.4					26.7/19.4				
		Outdoor			35.0/-					35.0/-				
	Indoor unit	No. of connected units		Unit	5					5				
		No. of units in operation			5					5				
		Model		-	72	72	48	18	08	96	72	48	18	08
	Piping	Main pipe		m	5					5				
		Branch pipe			10					10				
		Total pipe length			55					55				
	Fan speed			-	Hi					Hi				
	Amount of refrigerant			kg	28.9					29.9				
Outdoor unit	Electric current			A	61.4/55.5					66.6/60.3				
	Voltage			V	208/230					208/230				
	Compressor frequency (No.1 / No.2)			Hz	98/60					107/60				
LEV opening	Indoor unit			Pulse	324	324	387	362	222	388	324	387	362	222
	BC controller (1/2/3)				2000/2000/225					2000/2000/240				
Pressure	High pressure/low pressure			MPa	2.93/0.84					3.03/0.83				
	BC controller on the liquid side/Intermediate part				2.76/2.76					2.84/2.84				
Temp. of each section	Outdoor unit	Discharge (TH11/TH12)		°C	84/86					86/86				
		Heat exchanger outlet (TH5)			41					43				
		Accumulator	Inlet		15					14				
			Outlet		15					14				
		Compressor inlet			19/17					18/15				
		Compressor shell bottom			47/43					53/49				
	Indoor unit	LEV inlet			24					24				
		Heat exchanger outlet			12					12				

(2) Heating only operation

Operation				Outdoor unit model Model name of BC controller							
				PURY-P72TGMU-A CMB-P104NU-G				PURY-P96TGMU-A CMB-P104NU-G			
Operating conditions	Power supply		V	208/230				208/230			
	Ambient temperature	Indoor	DB/WB °C	21.1/-				21.1/-			
		Outdoor		8.3/6.1				8.3/6.1			
	Indoor unit	No. of connected units	Unit	4				4			
		No. of units in operation		4				4			
		Model	-	27	24	18	06	36	27	24	06
	Piping	Main pipe	m	5				5			
		Branch pipe		10				10			
		Total pipe length		45				45			
	Fan speed		-	Hi				Hi			
	Amount of refrigerant		kg	14.8				18.4			
Outdoor unit	Electric current		A	19.5/17.6				26.4/23.8			
	Voltage		V	208/230				208/230			
	Compressor frequency		Hz	55				73			
LEV opening	Indoor unit		Pulse	450	695	555	310	555	450	695	310
	BC controller (1/2/3)			110/ - /520				110/ - /590			
Pressure	High pressure/low pressure		MPa	2.82/0.67				2.71/0.67			
	BC controller on the liquid side/Intermediate part			2.72/2.72				2.61/2.61			
Temp. of each section	Outdoor unit	Discharge (TH11)	°C	79				76			
		Heat exchanger outlet (TH5)		1				2			
		Accumulator Inlet		0				-1			
		Accumulator Outlet		0				-1			
		Compressor inlet		12				0			
		Compressor shell bottom		31				31			
	Indoor unit	LEV inlet		38				35			
		Heat exchanger outlet		60				60			

Operation					Outdoor unit model Model name of BC controller							
					PURY-P108TGMU-A CMB-P104NU-G				PURY-P126TGMU-A CMB-P104NU-G			
Operating conditions	Power supply			V	208/230				208/230			
	Ambient temperature	Indoor		DB/WB °C	21.1/-				21.1/-			
		Outdoor			8.3/6.1				8.3/6.1			
	Indoor unit	No. of connected units		Unit	4				4			
		No. of units in operation			4				4			
		Model		-	48	30	24	12	54	48	24	12
	Piping	Main pipe		m	5				5			
		Branch pipe			10				10			
		Total pipe length			45				45			
	Fan speed			-	Hi				Hi			
	Amount of refrigerant			kg	18.4				18.9			
Outdoor unit	Electric current			A	30.6/27.6				36.0/32.5			
	Voltage			V	208/230				208/230			
	Compressor frequency			Hz	84				93			
LEV opening	Indoor unit			Pulse	597	478	695	345	668	597	695	345
	BC controller (1/2/3)				110/ - /660				110/ - /730			
Pressure	High pressure/low pressure			MPa	2.70/0.65				2.71/0.65			
	BC controller on the liquid side/Intermediate part				2.60/2.60				2.61/2.61			
Temp. of each section	Outdoor unit	Discharge (TH11)		°C	76				76			
		Heat exchanger outlet (TH5)			1				1			
		Accumulator	Inlet		0				0			
			Outlet		0				0			
		Compressor inlet			2				2			
		Compressor shell bottom			27				30			
	Indoor unit	LEV inlet			35				35			
		Heat exchanger outlet			60				60			

Operation				Outdoor unit model Model name of BC controller							
				PURY-P144TGMU-A CMB-P108NU-GA				PURY-P168TGMU-A CMB-P108NU-GA			
Operating conditions	Power supply		V	208/230				208/230			
	Ambient temperature	Indoor	DB/WB °C	21.1/-				21.1/-			
		Outdoor		8.3/6.1				8.3/6.1			
	Indoor unit	No. of connected units	Unit	4				4			
		No. of units in operation		4				4			
		Model	-	72	36	24	12	96	36	24	12
	Piping	Main pipe	m	5				5			
		Branch pipe		10				10			
		Total pipe length		45				45			
	Fan speed		-	Hi				Hi			
	Amount of refrigerant		kg	22.2				27.7			
Outdoor unit	Electric current		A	42.1/38.1				46.3/41.9			
	Voltage		V	208/230				208/230			
	Compressor frequency (No.1 / No.2)		Hz	103				62/60			
LEV opening	Indoor unit		Pulse	555	555	695	345	597	555	695	345
	BC controller (1/2/3)			110/110/880				110/110/870			
Pressure	High pressure/low pressure		MPa	2.43/0.68				2.81/0.70			
	BC controller on the liquid side/Intermediate part			2.35/2.35				2.76/2.76			
Temp. of each section	Outdoor unit	Discharge (TH11/TH12)	°C	71/-				75/78			
		Heat exchanger outlet (TH5)		2				4			
		Accumulator Inlet		0				1			
		Accumulator Outlet		0				1			
		Compressor inlet		-1				1/1			
		Compressor shell bottom		30				23/27			
	Indoor unit	LEV inlet		31				38			
		Heat exchanger outlet		60				62			

Operation					Outdoor unit model Model name of BC controller							
					PURY-P192TGMU-A CMB-P108NU-GA				PURY-P204TGMU-A CMB-P108NU-GA			
Operating conditions	Power supply			V	208/230				208/230			
	Ambient temperature	Indoor		DB/WB °C	21.1/-				21.1/-			
		Outdoor			8.3/6.1				8.3/6.1			
	Indoor unit	No. of connected units		Unit	4				4			
		No. of units in operation			4				4			
		Model		-	96	48	36	12	96	48	48	24
	Piping	Main pipe		m	5				5			
		Branch pipe			10				10			
		Total pipe length			45				45			
	Fan speed			-	Hi				Hi			
	Amount of refrigerant			kg	28.2				29.0			
Outdoor unit	Electric current			A	53.9/48.7				57.5/52.0			
	Voltage			V	208/230				208/230			
	Compressor frequency (No.1 / No.2)			Hz	82/60				93/60			
LEV opening	Indoor unit			Pulse	597	597	555	345	597	597	597	695
	BC controller (1/2/3)				110/110/980				110/110/1050			
Pressure	High pressure/low pressure			MPa	2.82/0.70				2.83/0.69			
	BC controller on the liquid side/Intermediate part				2.76/2.76				2.77/2.77			
Temp. of each section	Outdoor unit	Discharge (TH11/TH12)		°C	76/81				76/79			
		Heat exchanger outlet (TH5)			4				4			
		Accumulator	Inlet		1				1			
			Outlet		1				1			
		Compressor inlet			1/1				1/1			
		Compressor shell bottom			24/27				26/29			
	Indoor unit	LEV inlet			39				38			
		Heat exchanger outlet			62				62			

Operation				Outdoor unit model Model name of BC controller									
				PURY-P216TGMU-A CMB-P108NU-GA					PURY-P234TGMU-A CMB-P108NU-GA				
Operating conditions	Power supply		V	208/230					208/230				
	Ambient temperature	Indoor	DB/WB °C	21.1/-					21.1/-				
		Outdoor		8.3/6.1					8.3/6.1				
	Indoor unit	No. of connected units	Unit	5					5				
		No. of units in operation		5					5				
		Model	-	72	72	48	18	08	96	72	48	18	08
	Piping	Main pipe	m	5					5				
		Branch pipe		10					10				
		Total pipe length		55					55				
	Fan speed		-	Hi					Hi				
	Amount of refrigerant		kg	28.9					29.9				
Outdoor unit	Electric current		A	64.8/58.6					71.2/64.4				
	Voltage		V	208/230					208/230				
	Compressor frequency (No.1 / No.2)		Hz	99/60					105/60				
LEV opening	Indoor unit		Pulse	555	555	597	555	367	597	555	597	555	367
	BC controller (1/2/3)			110/110/1120					110/110/1190				
Pressure	High pressure/low pressure		MPa	2.85/0.66					2.86/0.63				
	BC controller on the liquid side/Intermediate part			2.78/2.78					2.79/2.79				
Temp. of each section	Outdoor unit	Discharge (TH11/TH12)	°C	79/82					83/85				
		Heat exchanger outlet (TH5)		3					1				
		Accumulator Inlet		0					-1				
		Accumulator Outlet		0					-1				
		Compressor inlet		-1/-1					-2/-2				
		Compressor shell bottom		26/29					29/31				
	Indoor unit	LEV inlet		38					38				
		Heat exchanger outlet		62					62				

4. PURY <US unit of measure>

(1) Cooling only operation

Operation					Outdoor unit model Model name of BC controller							
					PURY-P72TGMU-A CMB-P104NU-G				PURY-P96TGMU-A CMB-P104NU-G			
Operating conditions	Power supply			V	208/230				208/230			
	Ambient temperature	Indoor		DB/WB °F	80/67				80/67			
		Outdoor			95/-				95/-			
	Indoor unit	No. of connected units		Unit	4				4			
		No. of units in operation			4				4			
		Model		-	27	24	18	06	36	27	24	06
	Piping	Main pipe		Ft	16				16			
		Branch pipe			32				32			
		Total pipe length			147				147			
	Fan speed			-	Hi				Hi			
	Amount of refrigerant			lbs-oz	32-10				40-9			
Outdoor unit	Electric current			A	19.9/18.0				26.7/24.1			
	Voltage			V	208/230				208/230			
	Compressor frequency			Hz	53				70			
LEV opening	Indoor unit			Pulse	253	441	362	187	325	253	441	187
	BC controller (1/2/3)				2000/ - /130				2000/ - /135			
Pressure	High pressure/low pressure			psi	435/133				416/139			
	BC controller on the liquid side/Intermediate part				413/413				395/395			
Temp. of each section	Outdoor unit	Discharge (TH11)		°F	183				187			
		Heat exchanger outlet (TH5)			102				106			
		Accumulator	Inlet		57				57			
			Outlet		57				57			
		Compressor inlet			81				73			
		Compressor shell bottom			102				102			
	Indoor unit	LEV inlet			66				66			
		Heat exchanger outlet			55				55			

Operation				Outdoor unit model Model name of BC controller							
				PURY-P108TGMU-A CMB-P104NU-G				PURY-P126TGMU-A CMB-P104NU-G			
Operating conditions	Power supply		V	208/230				208/230			
	Ambient temperature	Indoor	DB/WB °F	80/67				80/67			
		Outdoor		95/-				95/-			
	Indoor unit	No. of connected units	Unit	4				4			
		No. of units in operation		4				4			
		Model	-	48	30	24	12	54	48	24	12
	Piping	Main pipe	Ft	16				16			
		Branch pipe		32				32			
		Total pipe length		147				147			
	Fan speed		-	Hi				Hi			
	Amount of refrigerant		lbs-oz	40-9				41-11			
Outdoor unit	Electric current		A	30.0/27.1				35.0/31.6			
	Voltage		V	208/230				208/230			
	Compressor frequency		Hz	77				89			
LEV opening	Indoor unit		Pulse	387	275	441	261	373	387	441	261
	BC controller (1/2/3)			2000/ - /150				2000/ - /160			
Pressure	High pressure/low pressure		psi	442/133				446/126			
	BC controller on the liquid side/Intermediate part			421/421				441/441			
Temp. of each section	Outdoor unit	Discharge (TH11)	°F	181				190			
		Heat exchanger outlet (TH5)		115				115			
		Accumulator Inlet		57				57			
		Accumulator Outlet		57				57			
		Compressor inlet		72				75			
		Compressor shell bottom		111				120			
	Indoor unit	LEV inlet		68				75			
		Heat exchanger outlet		55				55			

Operation				Outdoor unit model Model name of BC controller							
				PURY-P144TGMU-A CMB-P108NU-GA				PURY-P168TGMU-A CMB-P108NU-GA			
Operating conditions	Power supply		V	208/230				208/230			
	Ambient temperature	Indoor	DB/WB °F	80/67				80/67			
		Outdoor		95/-				95/-			
	Indoor unit	No. of connected units	Unit	4				4			
		No. of units in operation		4				4			
		Model	-	72	36	24	12	96	36	24	12
	Piping	Main pipe	Ft	16				16			
		Branch pipe		32				32			
		Total pipe length		147				147			
	Fan speed		-	Hi				Hi			
	Amount of refrigerant		lbs-oz	48-15				61-1			
Outdoor unit	Electric current		A	43.8/39.6				46.1/41.7			
	Voltage		V	208/230				208/230			
	Compressor frequency (No.1 / No.2)		Hz	103				65/60			
LEV opening	Indoor unit		Pulse	324	325	441	261	324	387	275	362
	BC controller (1/2/3)			2000/2000/180				2000/2000/190			
Pressure	High pressure/low pressure		psi	422/136				399/125			
	BC controller on the liquid side/Intermediate part			400/400				377/377			
Temp. of each section	Outdoor unit	Discharge (TH11/TH12)	°F	187/-				180/185			
		Heat exchanger outlet (TH5)		113				106			
		Accumulator Inlet		61				59			
		Accumulator Outlet		61				59			
		Compressor inlet		73				70/81			
		Compressor shell bottom		118				91/108			
	Indoor unit	LEV inlet		79				75			
		Heat exchanger outlet		59				55			

Operation				Outdoor unit model Model name of BC controller							
				PURY-P192TGMU-A CMB-P108NU-GA				PURY-P204TGMU-A CMB-P108NU-GA			
Operating conditions	Power supply		V	208/230				208/230			
	Ambient temperature	Indoor	DB/WB °F	80/67				80/67			
		Outdoor		95/-				95/-			
	Indoor unit	No. of connected units	Unit	4				4			
		No. of units in operation		4				4			
		Model	-	96	48	36	12	96	48	48	24
	Piping	Main pipe	Ft	16				16			
		Branch pipe		32				32			
		Total pipe length		147				147			
	Fan speed		-	Hi				Hi			
	Amount of refrigerant		lbs-oz	62-3				63-15			
Outdoor unit	Electric current		A	53.4/48.3				57.7/52.1			
	Voltage		V	208/230				208/230			
	Compressor frequency (No.1 / No.2)		Hz	78/60				88/60			
LEV opening	Indoor unit		Pulse	388	387	325	261	388	373	387	362
	BC controller (1/2/3)			2000/2000/200				2000/2000/210			
Pressure	High pressure/low pressure		psi	406/125				413/123			
	BC controller on the liquid side/Intermediate part			384/384				390/390			
Temp. of each section	Outdoor unit	Discharge (TH11/TH12)	°F	183/189				180/185			
		Heat exchanger outlet (TH5)		108				104			
		Accumulator Inlet		59				59			
		Accumulator Outlet		59				59			
		Compressor inlet		70/63				66/63			
		Compressor shell bottom		99/108				108/108			
	Indoor unit	LEV inlet		75				73			
		Heat exchanger outlet		55				55			

Operation				Outdoor unit model Model name of BC controller									
				PURY-P216TGMU-A CMB-P108NU-GA					PURY-P234TGMU-A CMB-P108NU-GA				
Operating conditions	Power supply		V	208/230					208/230				
	Ambient temperature	Indoor	DB/WB °F	80/67					80/67				
		Outdoor		95/-					95/-				
	Indoor unit	No. of connected units	Unit	5					5				
		No. of units in operation		5					5				
		Model	-	72	72	48	18	08	96	72	48	18	08
	Piping	Main pipe	Ft	16					16				
		Branch pipe		32					32				
		Total pipe length		180					180				
	Fan speed		-	Hi					Hi				
	Amount of refrigerant		lbs-oz	63-11					65-15				
Outdoor unit	Electric current		A	61.4/55.5					66.6/60.3				
	Voltage		V	208/230					208/230				
	Compressor frequency (No.1 / No.2)		Hz	98/60					107/60				
LEV opening	Indoor unit		Pulse	324	324	387	362	222	388	324	387	362	222
	BC controller (1/2/3)			2000/2000/225					2000/2000/240				
Pressure	High pressure/low pressure		psi	425/122					439/120				
	BC controller on the liquid side/Intermediate part			400/400					412/412				
Temp. of each section	Outdoor unit	Discharge (TH11/TH12)	°F	183/187					187/187				
		Heat exchanger outlet (TH5)		106					109				
		Accumulator Inlet		59					57				
		Accumulator Outlet		59					57				
		Compressor inlet		66/63					64/59				
		Compressor shell bottom		117/109					127/120				
	Indoor unit	LEV inlet		75					75				
		Heat exchanger outlet		54					54				

(2) Heating only operation

Operation				Outdoor unit model Model name of BC controller							
				PURY-P72TGMU-A CMB-P104NU-G				PURY-P96TGMU-A CMB-P104NU-G			
Operating conditions	Power supply		V	208/230				208/230			
	Ambient temperature	Indoor	DB/WB °F	70/-				70/-			
		Outdoor		47/43				47/43			
	Indoor unit	No. of connected units	Unit	4				4			
		No. of units in operation		4				4			
		Model	-	27	24	18	06	36	27	24	06
	Piping	Main pipe	Ft	16				16			
		Branch pipe		32				32			
		Total pipe length		147				147			
	Fan speed		-	Hi				Hi			
	Amount of refrigerant		lbs-oz	32-10				40-9			
Outdoor unit	Electric current		A	19.5/17.6				26.4/23.8			
	Voltage		V	208/230				208/230			
	Compressor frequency		Hz	55				73			
LEV opening	Indoor unit		Pulse	450	695	555	310	555	450	695	310
	BC controller (1/2/3)			110/ - /520				110/ - /590			
Pressure	High pressure/low pressure		psi	409/97				393/97			
	BC controller on the liquid side/Intermediate part			395/395				379/379			
Temp. of each section	Outdoor unit	Discharge (TH11)	°F	174				169			
		Heat exchanger outlet (TH5)		34				36			
		Accumulator Inlet		32				30			
		Accumulator Outlet		32				30			
		Compressor inlet		54				32			
		Compressor shell bottom		163				88			
	Indoor unit	LEV inlet		100				95			
		Heat exchanger outlet		140				140			

Operation					Outdoor unit model Model name of BC controller							
					PURY-P108TGMU-A CMB-P104NU-G				PURY-P126TGMU-A CMB-P104NU-G			
Operating conditions	Power supply			V	208/230				208/230			
	Ambient temperature	Indoor		DB/WB °F	70/-				70/-			
		Outdoor			47/43				47/43			
	Indoor unit	No. of connected units		Unit	4				4			
		No. of units in operation			4				4			
		Model		-	48	30	24	12	54	48	24	12
	Piping	Main pipe		Ft	16				16			
		Branch pipe			32				32			
		Total pipe length			147				147			
	Fan speed			-	Hi				Hi			
	Amount of refrigerant			lbs-oz	40-9				41-11			
Outdoor unit	Electric current			A	30.6/27.6				36.0/32.5			
	Voltage			V	208/230				208/230			
	Compressor frequency			Hz	84				93			
LEV opening	Indoor unit			Pulse	597	478	695	345	668	597	695	345
	BC controller (1/2/3)				110/ - /660				110/ - /730			
Pressure	High pressure/low pressure			psi	392/94				393/94			
	BC controller on the liquid side/Intermediate part				377/377				379/379			
Temp. of each section	Outdoor unit	Discharge (TH11)		°F	169				169			
		Heat exchanger outlet (TH5)			34				34			
		Accumulator	Inlet		32				32			
			Outlet		32				32			
		Compressor inlet			36				36			
		Compressor shell bottom			81				86			
	Indoor unit	LEV inlet			95				95			
		Heat exchanger outlet			140				140			

Operation				Outdoor unit model Model name of BC controller							
				PURY-P144TGMU-A CMB-P108NU-GA				PURY-P168TGMU-A CMB-P108NU-GA			
Operating conditions	Power supply		V	208/230				208/230			
	Ambient temperature	Indoor	DB/WB °F	70/-				70/-			
		Outdoor		47/43				47/43			
	Indoor unit	No. of connected units	Unit	4				4			
		No. of units in operation		4				4			
		Model	-	72	36	24	12	96	36	24	12
	Piping	Main pipe	Ft	16				16			
		Branch pipe		32				32			
		Total pipe length		147				147			
	Fan speed		-	Hi				Hi			
	Amount of refrigerant		lbs-oz	48-15				61-1			
Outdoor unit	Electric current		A	42.1/38.1				46.3/41.9			
	Voltage		V	208/230				208/230			
	Compressor frequency (No.1 / No.2)		Hz	103				62/60			
LEV opening	Indoor unit		Pulse	555	555	695	345	597	555	695	345
	BC controller (1/2/3)			110/110/880				110/110/870			
Pressure	High pressure/low pressure		psi	352/99				408/102			
	BC controller on the liquid side/Intermediate part			341/341				400/400			
Temp. of each section	Outdoor unit	Discharge (TH11/TH12)	°F	160/-				167/172			
		Heat exchanger outlet (TH5)		36				39			
		Accumulator Inlet		32				34			
		Accumulator Outlet		32				34			
		Compressor inlet		30				34/34			
		Compressor shell bottom		86				73/81			
	Indoor unit	LEV inlet		88				100			
		Heat exchanger outlet		140				144			

Operation				Outdoor unit model Model name of BC controller							
				PURY-P192TGMU-A CMB-P108NU-GA				PURY-P204TGMU-A CMB-P108NU-GA			
Operating conditions	Power supply		V	208/230				208/230			
	Ambient temperature	Indoor	DB/WB °F	70/-				70/-			
		Outdoor		47/43				47/43			
	Indoor unit	No. of connected units	Unit	4				4			
		No. of units in operation		4				4			
		Model	-	96	48	36	12	96	48	48	24
	Piping	Main pipe	Ft	16				16			
		Branch pipe		32				32			
		Total pipe length		147				147			
	Fan speed		-	Hi				Hi			
	Amount of refrigerant		lbs-oz	62-3				63-15			
Outdoor unit	Electric current		A	53.9/48.7				57.5/52.0			
	Voltage		V	208/230				208/230			
	Compressor frequency (No.1 / No.2)		Hz	82/60				93/60			
LEV opening	Indoor unit		Pulse	597	597	555	345	597	597	597	695
	BC controller (1/2/3)			110/110/980				110/110/1050			
Pressure	High pressure/low pressure		psi	409/102				410/100			
	BC controller on the liquid side/Intermediate part			400/400				402/402			
Temp. of each section	Outdoor unit	Discharge (TH11/TH12)	°F	169/178				169/174			
		Heat exchanger outlet (TH5)		39				39			
		Accumulator Inlet		34				34			
		Accumulator Outlet		34				34			
		Compressor inlet		34/34				34/34			
		Compressor shell bottom		75/81				79/84			
	Indoor unit	LEV inlet		102				100			
		Heat exchanger outlet		144				144			

Operation				Outdoor unit model Model name of BC controller									
				PURY-P216TGMU-A CMB-P108NU-GA					PURY-P234TGMU-A CMB-P108NU-GA				
Operating conditions	Power supply		V	208/230					208/230				
	Ambient temperature	Indoor	DB/WB °F	70/-					70/-				
		Outdoor		47/43					47/43				
	Indoor unit	No. of connected units	Unit	5					5				
		No. of units in operation		5					5				
		Model	-	72	72	48	18	08	96	72	48	18	08
	Piping	Main pipe	Ft	16					16				
		Branch pipe		32					32				
		Total pipe length		180					180				
	Fan speed		-	Hi					Hi				
	Amount of refrigerant		lbs-oz	63-11					65-15				
Outdoor unit	Electric current		A	64.8/58.6					71.2/64.4				
	Voltage		V	208/230					208/230				
	Compressor frequency (No.1 / No.2)		Hz	99/60					105/60				
LEV opening	Indoor unit		Pulse	555	555	597	555	367	597	555	597	555	367
	BC controller (1/2/3)			110/110/1120					110/110/1190				
Pressure	High pressure/low pressure		psi	413/96					415/91				
	BC controller on the liquid side/Intermediate part			403/403					405/405				
Temp. of each section	Outdoor unit	Discharge (TH11/TH12)	°F	174/180					181/185				
		Heat exchanger outlet (TH5)		37					34				
		Accumulator Inlet		32					30				
		Accumulator Outlet		32					30				
		Compressor inlet		30/30					28/28				
		Compressor shell bottom		79/84					84/88				
	Indoor unit	LEV inlet		100					100				
		Heat exchanger outlet		144					144				

Ⅸ Troubleshooting

[1] Check Code Lists 235
[2] Responding to Error Display on the Remote Controller 239
[3] Investigation of Transmission Wave Shape/Noise 314
[4] Troubleshooting Principal Parts 317
[5] Refrigerant Leak 350
[6] Compressor Replacement Instructions (only P168-P234 types) 351
[7] Collecting the Cooling Liquid from the Accumulator (Only P168-P234 types) 353
[8] Servicing the BC controller 354

[1] Check Code Lists

Error Code	Preliminary error code	Error (preliminary) detail code	Error code definition	Searched unit					Notes
				Outdoor unit	Indoor unit	BC controller	LOSSNAY	Remote controller	
0403	4300 4305	01 05 (Note)	Serial communication error	O					
0900	-	-	Test run mode				O		
1102	1202	-	Abnormal discharge air temperature	O					
1301	-	-	Abnormal low pressure	O					
1302	1402	-	Abnormal high pressure	O					
1500	1600	-	Excessive or insufficient refrigerant	O					
-	1605	-	Preliminary suction pressure abnormality	O					
2500	-	-	Water leakage		O				
2502	-	-	Drain pump failure/Float switch trip		O	O			
2503	-	-	Drain pump failure/Float switch trip		O		O		
2600	-	-	Water leakage				O		
2601	-	-	Water supply cut-off				O		
4103	-	-	Reverse phase/open phase	O					
4108	4158	-	Overcurrent protection	O					
4115	-	-	Power supply sync signal abnormality	O					
4116	-	-	RPM error/Motor malfunction		O		O		
4220 4225 (Note)	4320 4325 (Note)	[108]	Bus voltage drop (S/W detection)	O					
		[109]	Bus voltage rise (S/W detection)	O					
		[110]	Bus voltage abnormality (H/W detection)	O					
		[111]	Logic error	O					
4230 4235 (Note)	4330 4325 (Note)	-	Heatsink overheat protection	O					
4240 4245 (Note)	4340 4345 (Note)	-	Overload protection	O					
4250 4255 (Note)	4350 4355 (Note)	[101]	IPM error	O					
		[102]	ACCT overcurrent breaker trip (H/W detection)	O					
		[103]	DCCT overcurrent breaker trip (H/W detection)	O					
		[104]	IPM short/grounding abnormality	O					
		[105]	Overcurrent error due to short-circuited motor	O					
		[106]	Instantaneous overcurrent breaker trip (S/W detection)	O					
		[107]	Effective overcurrent breaker trip (S/W detection)	O					

Error Code	Preliminary error code	Error (preliminary) detail code	Error code definition		Searched unit					Notes
					Outdoor unit	Indoor unit	BC controller	LOSSNAY	Remote controller	
4260 4265 (Note)	4360 4365 (No error history)		Cooling fan abnormality		O					
5101	1202	-	Temperature sensor failure	Suction air temperature (TH21)		O				
				Return of OA processing unit (TH4)				O		
				Discharge air temperature (TH11, TH12)	O					
5102	-	-	Temperature sensor failure	Indoor piping (TH22)		O				
				Pipes on the OA processing unit (TH2)				O		
5103	-	-	Temperature sensor failure	Gas side pipe (TH23)		O				
				Pipes on the OA processing unit (gas side) (TH3)				O		
5104	-	-	Temperature sensor failure	Pipes on the OA processing unit (TH1)				O		
				Outside air temperature (TH24)		O				
5105	1205	-	Temperature sensor failure	Pipe (TH5)	O					
5106	1221	-	Temperature sensor failure	Outside air temperature (TH6)	O					
5107	1216	-	Temperature sensor failure	SC coil outlet (TH7)	O					
5108	1217	-	Temperature sensor failure	SC coil bypass outlet (TH8)	O					
5110	1214	01 05 (Note)	Temperature sensor failure	Heatsink (THHS)	O					
5111	-	-	Temperature sensor failure (BC controller)	BC controller liquid inlet (TH11)			O			
5112	-	-		Bypass outlet (TH12)			O			
5115	-	-		Bypass inlet (TH15)			O			
5116	-	-		Intermediate(TH16)			O			
5201	1402	-	High pressure sensor failure (OC: HPS) /BC controller (63HS)		O		O			
5203	-	-	BC controller intermediate pressure sensor (63HS3)				O			

Error Code	Preliminary error code	Error (preliminary) detail code	Error code definition	Searched unit					Notes
				Outdoor unit	Indoor unit	BC controller	LOSSNAY	Remote controller	
5301 (Note)	4300 (Note)	[115]	ACCT sensor failure	O					
		[116]	DCCT sensor failure	O					
		[117]	ACCT sensor circuit failure	O					
		[118]	DCCT sensor circuit failure	O					
		[119]	IPM open/Disconnected ACCT connector	O					
		[120]	ACCT faulty wiring detection	O					
6201	-	-	Remote controller board failure (nonvolatile memory failure)					O	
6202	-	-	Remote controller board failure (clock IC failure)					O	
6600	-	-	Address overlaps	O	O	O	O	O	
6601	-	-	Polarity setting error	O					
6602	-	-	Transmission processor hardware error	O	O	O	O	O	
6603	-	-	Transmission circuit bus-busy	O	O	O	O	O	
6606	-	-	Communication error with the transmission processor	O	O	O	O	O	
6607	-	-	No ACK	O	O	O	O	O	
6608	-	-	No response	O	O	O	O	O	
6831	-	-	MA communication transmission error (No receipt)		O			O	
6832	-	-	MA communication receipt error (Synchronization)		O			O	
6833	-	-	MA communication transmission error (Hardware error)		O			O	
6834	-	-	MA communication transmission error (Start bit detection error)		O			O	
7100	-	-	Total capacity error	O					
7101	-	-	Capacity code error	O	O		O		
7102	-	-	Error in the number of connected units	O		O			
7105	-	-	Address setting error	O					
7106	-	-	Attribute setting error				O		
7107	-	-	Port setting error			O			
7110	-	-	Unset unit connection information error	O					
7111	-	-	Remote controller sensor failure		O		O		
7113	-	-	Function setting error	O					
7116	-	-	Replace Multi setting error	O					
7117	-	-	Model setting error	O					
7130	-	-	Incompatible units	O					

Note: The last digit in the check error codes in the 4000's and 5000's and two-digit detail codes indicate if the codes apply to compressor inverter on fan inverter.

Example
Code 4225 : Bus voltage drop in the fan inverter system
Code 4250 : IPM / overcurrent breaker trip in the compressor inverter system

The last digit	Inverter address (system)	Inverter system
0 or 1	1	Compressor inverter system
5	5	Fan inverter system

[2] Responding to Error Display on the Remote Controller

-1- PUHY

1. Mechanical system

Error Code		Error definition and error detection method	Cause	Check method and remedy
0403	Serial communication error	Serial communication error between the main board and the INV board on the compressor, and between the main board and the inverter board on the fan Detail code 01: Between the main board and the compressor INV board Detail code 05: Between the main board and the FAN INV board	(1) Faulty wiring	Check for wiring between the connector (CNRS3B) on the main board and the connector (CNRS1) on the compressor INV board or between the connector (CNRS3A) on the main board and the connector (CNRS2) on the FAN INV board and check contact of the connectors. Check for contact of the connector (CNAC3) on the main board or of the connector (CNTR) on the FAN INV board.
			(2) Inverter address switch setting error	Check the setting for SW2-1 on the inverter board on the compressor. Confirm that the SW2-1 on the fan inverter board is set to ON.
			(3) Transformer failure	Measure voltages between pins 1 and 3 of the male connector (CNTR) on the FAN INV board.
			(4) Compressor INV board failure FAN INV board failure.	Replace the compressor INV board or the FAN board when the power turns on automatically, even if the power source is reset.

Refer to section -8-"Inverter " under part [4] "Trouble shooting principal parts" for error codes related to the inverter.

Error Code		Error definition and error detection method	Cause	Check method and remedy
1102	Abnormal discharge air temperature	1. If the discharge temperature of 120°C [248°F] or more is detected during the above operation (the first detection), the outdoor unit stops once, turns to anti-restart mode for 3 minutes, and restarts after 3 minutes automatically. 2. If the discharge temperature of 120°C [248°F] or more is detected again (the second detection) within 30 minutes after the second stop of the outdoor unit described above, the mode will be changed to 3-minute restart mode, then the outdoor unit will restart in 3 minutes. 3. If the discharge temperature of 120°C [248°F] or more is detected (the third detection) within 30 minutes after the stop of the outdoor unit described above (regardless of the first or the second stop), the outdoor unit will make an error stop, and the error code "1102" will be displayed. 4. If the discharge temperature of 120°C [248°F] or more is detected more than 30 minutes after the previous stop of the outdoor unit, the detection is regarded as the first detection, and the operation described in step 1 above will start. 5. For 30 minutes after the stop (the first stop or the second stop) of the outdoor unit, preliminary errors will be displayed on the LED display.	(1) Gas leak, gas shortage	Refer to the page on refrigerant amount evaluation.
			(2) Overload operation	Check operating conditions and operation status of indoor/outdoor units.
			(3) LEV failure on the indoor unit (4) LEV1 failure on the outdoor unit	Perform a cooling or heating operation and check the operation. Cooling : LEV on the indoor unit LEV1 Heating : LEV on the indoor unit Refer to the page on troubleshooting LEV.
			(5) Closed ball valve	Confirm that the ball valve is fully open.
			(6) Outdoor fan (including fan parts) failure, motor failure, or fan controller malfunction Rise in discharge temp. by low pressure drawing for (3) - (6).	Check the fan on the outdoor unit. Refer to the section on troubleshooting the outdoor unit fan.
			(7) Gas leak between low and high pressures (4-way valve failure, Compressor failur, Solenoid valve (SV1) failure)	Perform a cooling or heating operation and check the operation.
			(8) Thermistor failure (TH1,TH11,TH12)	Check the thermistor resistor.
			(9) Input circuit failure on the controller board thermistor	Check the inlet air temperature on the LED monitor.

Error Code		Error definition and error detection method	Cause	Check method and remedy
1301	Abnormal low pressure	When starting the compressor from Stop Mode for the first time if low-pressure reads 0.098MPa [14psi] immediately before start-up, the operation immediately stops.	(1) Inner pressure drop due to a leakage. (2) Low pressure sensor failure (3) Short-circuited pressure sensor cable due to torn outer rubber (4) A pin on the male connector is missing. (5) Disconnected wire (6) Failure of the low pressure input circuit on the controller board	Refer to the section on troubleshooting the low pressure sensor.

Error Code		Error definition and error detection method	Cause	Check method and remedy
1302	Abnormal high pressure 1 (outdoor unit)	1. If the pressure of 3.87MPa [561psi] or higher is detected by the pressure sensor during operation (the first detection), the outdoor stops once, turns to anti-restart mode for 3 minutes, and restarts after 3 minutes automatically. 2. If the pressure of 3.87MPa [561psi] or higher is detected by the pressure sensor again (the second detection) within 30 minutes after the first stop of the outdoor unit, the outdoor unit stops once, turns to anti-restart mode for 3 minutes, and restarts after 3 minutes automatically. 3. If the pressure of 3.87MPa [561psi] or higher is detected by the pressure sensor (the third detection) within 30 minutes of the second stop of the outdoor unit, the outdoor unit will make an error stop, and the error code "1302" will be displayed. 4. If the pressure of 3.87MPa [561psi] or higher is detected more than 30 minutes after the stop of the outdoor unit, the detection is regarded as the first detection, and the operation described in step 1 above will start. 5. For 30 minutes after the stop of the outdoor unit, preliminary errors will be displayed on the LED display. 6. The outdoor unit makes an error stop immediately when not only the pressure sensor but also the pressure switch detects $4.15^{+0,-0.15}$ MPa [$601^{+0,-22}$ psi]	(1) LEV failure on the indoor unit -> Heating	Perform a heating operation and check the operation. Heating : LEV on the indoor unit Refer to the page on troubleshooting LEV.
			(2) Closed ball valve	Confirm that the ball valve is fully open.
			(3) Short cycle on the indoor unit side (4) Clogged filter on the indoor unit (5) Reduced air flow due to dirty fan on the indoor unit fan (6) Dirty heat exchanger of the indoor unit (7) Indoor fan (including fan parts) failure or motor failure Rise in high pressure caused by lowered condensing capacity in heating operation for (2) - (7).	Check the indoor units for problems and correct them, if any.
			(8) Short cycle on the outdoor unit (9) Dirty heat exchanger of the outdoor unit	
			(10) Outdoor fan (including fan parts) failure, motor failure, or fan controller malfunction Rise in discharge temp. by low pressure drawing for (3) - (6).	Check the fan on the outdoor unit. Refer to the section on troubleshooting the outdoor unit fan.
			(11) Solenoid valve (SV1) malfunction (The by-pass valve (SV1) can not control rise in high pressure).	Refer to the section on troubleshooting the solenoid valve.
			(12) Thermistor failure (TH5, TH6).	Check the thermistor resistor.
			(13) Pressure sensor failure	Refer to the page on the troubleshooting of the high pressure sensor.
			(14) Failure of the thermistor input circuit and pressure sensor input circuit on the controller board	Check the temperature and the pressure of the sensor with LED monitor.
			(15) Faulty mounting of thermistor (TH5, TH6) (16) Disconnected male connector on the pressure switch (63H) or disconnected wire	Check the temperature and the pressure of the sensor with LED monitor.
			(17) Melted fuse (F1 or F2) on the controller board	Check for a melted fuse.Check for short-circuited cooling FAN (MF), 4-way valve, or actuator like solenoid valve.
	Abnormal high pressure 2 (outdoor unit)	If the pressure of 0.098MPa [14psi] or lower is registered on the pressure sensor immediately before start-up, it will trigger an abnormal stop, and error code "1302" will be displayed.	(1) Inner pressure drop due to a leakage. (2) Pressure sensor failure (3) Shorted-circuited pressure sensor cable due to torn outer rubber (4) A pin on the male connector on the pressure sensor is missing or contact failure (5) Disconnected pressure sensor cable (6) Failure of the pressure sensor input circuit on the controller board	Refer to the page on the troubleshooting of the high pressure sensor.

Error Code		Error definition and error detection method	Cause	Check method and remedy
1500	Refrigerant overcharge	An error can be detected by the discharge temperature superheat. 1. If the discharge SH 10K [18°F] or less is detected during operation (the first detection), the outdoor unit stops at once, turns to anti-restart mode for 3 minutes, and restarts after 3 minutes automatically. 2. If the discharge SH 10K [18°F] or less is detected again within 30 minutes after first stop of the outdoor unit (the second detection), the outdoor unit will make an error stop, and the error code "1500" is displayed. 3. If discharge SH 10K [18°F] or less is detected more than 30 minutes after the outdoor unit stops, and the operation described in step 1 above will start. 4. For 30 minutes after the stop of the outdoor unit, preliminary errors will be displayed on the LED display.	(1) Overcharged refrigerant	Refer to the page on refrigerant amount evaluation.
			(2) Thermistor input circuit failure on the main board (3) Faulty mounting of thermistor (TH11, TH12)	Check the temperature and the pressure of the sensor with LED monitor.
2500	Water leakage	When the drain sensor detects water or its tip becomes immersed in water.	Water leakage due to problems with such equipment as a humidifier	Check for water leakage around the humidifier and clogging of outlet of the drain pan.

Error Code		Error definition and error detection method	Cause	Check method and remedy
2502	Drain pump failure (The error code blinks on the indoor unit in trouble.)	When the drain sensor detects water or its tip becomes immersed in water during drain pump operation.	(1) Drain pump malfunction (2) Clogged drain pump intake (3) Clogged drain pipe (4) Return water from drain pipe (Improper installation)	1) Check for drain pump malfunction ♦**Check whether there is water in the drain pan.** When the water level is approximately 10mm [13/32"] from the bottom of the drain pan, the drain pump may be normal. ♦**Check whether the drain pump operates properly.** Check whether the resistance of the drain pump is normal or the drain pump operates normally when the power supply is applied. 2) Check for clogged drain pump intake. Check whether there is no dust around the drain pump intake. 3) Check for clogged drain pipe Check whether there is no clogging outside of the pipe body. 4) Check for return water. Pour approximately 1-liter water in the drain pump, and start the drain pump. When the water level in the drain pan becomes steadily lower, stop the pump, and check the amount of the return water to the drain pan. *When a large amount of water returns, the gradient of drain pipe may be the reason.Check whether the drain pipe is installed properly as the instructions in the installation manual say.Furthermore, check whether the gradient of the unit installation is horizontal.An error may occur due to return water depending on the gradient. Target gradient approximately 0.5°) After checking the above, when all normal, misdetection of the drain sensor is possible. ♦**Check the drain sensor.** Check the resistance value <Error reset method> Reset (error reset) the indoor unit in trouble with the remote controller.
	Drain pump failure (The error code blinks on all the indoor units in the system with one outdoor unit.)	When the drain sensor detects water or its tip becomes immersed in water during drain pump operation on stopping indoor units.	(1) Drain pump malfunction (2) Clogged drain pump intake (3) Clogged drain pipe (4) Return water from drain pipe (Improper installation)	Same as above <Error reset method> Reset the power of the indoor unit in trouble.However, the reset with the remote controller (error reset) must be made 10 minutes later after the power has been reset.All the indoor units must be reset with the remote controller.

Error Code		Error definition and error detection method	Cause	Check method and remedy
2503	Drain sensor failure	When a short or an open is detected during operation (cannot be detected during OFF). Short : detectable at 90°C [194°F] or higher Open : detectable at -20°C [-4°F] or lower	(1) Thermistor failure (2) Connector contact failure (loose connector) (3) Disconnected wire or partial disconnected thermistor wire	Check the thermistor resistance. 0°C [32°F] : 6.0 kohm 10°C [50°F] : 3.9 kohm 20°C [68°F]: 2.6 kohm 30°C [86°F] : 1.8 kohm 40°C [104°F] : 1.3 kohm
			Indoor board (detection circuit) failure	Check the connector contact. If no fault is found, the indoor board is a failure.
2600	Water leakage	-	Water leaks from the pipes in such as the humidifier.	Check the location of the leak.
2601	Water supply cut-off	-	(1) The water tank of the humidifier is empty.	Check the amount of supply water. Check for the solenoid valve and for the connection.
			(2) The solenoid valve for humidification is OFF.	Check the connector.
			(3) Disconnected float switch	Check the connecting part.
			(4) Poor operation of float switch	Check for the float switch.
			(5) Frozen water tank	Turn off the power source of the water tank to defrost, and turn it on again.
4103	Reverse phase/open phase	1. When turning on the power, the operation cannot be started because of the open phase of one of the power lines (L1, L2 or L3).	(1) Faulty wiring	•Check whether the phase of the power supply terminal block (TB1) is normal. •Check the wiring between the power supply terminal block (TB1) and the main boards (CN20 and CN21). TB1 – Pin L1 – CN20 – 5Pin L2 – CN21 – 3Pin L3 – CN21 – 1Pin
			(2) Main board failure.	If the above faults are not found, the main board is faulty.
		2. The operation cannot be started because of the reserve phase of one of the power lines (L1, L2 or L3).	(1) Power supply error •Open phase of power supply voltage •Power-supply voltage drop	Check the input resistance of the power supply terminal block (TB1).
			(2) Faulty wiring Between the power supply terminal block (TB1) and the main boards (CN20 and 21)	•Measure voltages of pin 5 of the male connector (CN20) on the main board and between pins 1 and 3 of the male connector (CN21) on the main board. •If the voltage is not the same as the power supply voltage, the wiring is faulty.
			(3) A fuse is blown.	Check whether the fuses of the main board (both F01 and F02) are not blown.
			(4) Main board failure	If the above faults are not found, the main board is faulty.

Error Code		Error definition and error detection method	Cause	Check method and remedy
4108	Overcurrent protection	1. First detection If 51C2 is started during the operation of No.2 compressor, the outdoor unit stops once, turns to anti-restart mode for 3 minutes, and restarts after 3 minutes. (Set value of the over-current relay: 43A) 2. Second detection If 51C2 is started again within a minute after restarting in compliance with 1. above, the unit makes an error stop and the error code "4108" will appear. 3. There will be a minute grace period of an error stop when No.2 compressor restarts after the outdoor unit stops and LED indicates, which means the grace period, will appear.	(1) Overload operation that exceeds unit use limit	Check the unit working condition.
			(2) Power supply error •Power-supply voltage drop •Open phase of power supply voltage	Check the voltage of the power supply terminal block (TB1). Check for open phase.
			(3) Faulty wiring	Check 52C2 connector and the wiring.
			(4) Compressor failure •Compressor open phase or grounding fault •Compressor lock	Check the wiring and apply a megger to the compressor. Start operation under no-load conditions. Remove the power wire on the compressor-side, insulate the power line and start operation. -> The compressor is faulty if 52C2 normally turns on.
4115	Power supply sync signal abnormality	The frequency cannot be determined when the power is switched on.	(1) Power supply error	Check the voltage of the power supply terminal block (TB1).
			(2) A fuse is blown	Check the fuses on the main board (F01 and F02).
			(3) Faulty wiring	Measure voltages of pin 5 of the male connector (CN20) on the main board and between pins 1 and 3 of the male connector (CN21) on the main board. If the voltage (AC208/230V) is not the same as the power supply voltage, the wiring is faulty.
			(4) Main board failure	If none of the items described above is applicable, and if the trouble reappears even after the power is switched on again, replace the MAIN board.
4116	Motor abnormality	1. LOSSNAY •The motor keep running even if the power is OFF. •The thermal overload relay is ON. (Only for the three-phase model) 2. Indoor unit If detected less than 180rpm or more than 2000rpm, the indoor unit will restart and keep running for 3 minutes.If detected again, the display will appear.	(1) Board failure	Replace the board.
			(2) Motor malfunction (3) Solenoid switch malfunction	Check for the motor and the solenoid switch.

Error Code		Error definition and error detection method	Cause	Check method and remedy
4220 4225	Bus voltage drop (Detail code 108)	If Vdc 150V or less is detected during Inverter operation. (S/W detection)	(1) Power supply environment	Check whether the unit makes an instantaneous stop when the detection result is abnormal or a power failure occurs. Check whether the power voltage is 150V or less across all phases.
			(2) Voltage drop detected	**In the case of 4220** Measure voltages of the male connector (CNDC2) on the compressor INV board. -> Replace the INV board when there is no voltage drop. -> Check the followings when there is a voltage drop. 1) Check the voltage of CN52C1 on the main board. Refer to (3). 2) Check whether 52C1 works normally Refer to (4). Or check 52C1 connecting piping. 3) Check for the diode stack. Refer to (5). 4) Check for the wiring and the connectors between the CNDC2-G on the compressor INV board and the CNDC1 on the G/A board. Replace G/A board when no fault is found for the above (1) - (4). **In the case of 4225** Check the following. 1) Check the voltage of CN52C1 on the main board. Refer to (3). 2) Check whether 52C1 works normally Refer to (4). Or check 52C1 wire connection. 3) Check for diode stack failure. Refer to (5). 4) Check the wiring and the connectors of the CNVDC on the FAN INV board. Replace FAN INV board when no fault is found for the above (1) - (4).
			(3) Main board failure	Check whether AC208/230V is applied to the male connector (CN52C1) on the main board during inverter operation. ->If not applied, check the main board and the fuse (F01 andF02). Replace the main board when no fault is found.
			(4) 52C1 failure	Refer to 9 [4]-8-(4) and check the coil resistance check.
			(5) Diode stack failure	Refer to 9 [4]-8-(6) and check the diode stack resistance.
	Bus voltage rise (Detail code 109)	If Vdc 425V or more is detected during inverter operation.	(1) Different voltage connection	Check the power supply voltage on the power supply terminal block (TB1).
			(2) INV board failure	Replace the INV board when no fault is found. In the case of 4220: Compressor INV board In the case of 4225: FAN INV board
	Abnormal VDC (Detail code 110)	Bus voltage abnormality If Vdc 400V or more or Vdc 160V or less is detected. (H/W detection)	Same as detail code No.108 and 109 of 4220 error	Same as detail code No.108 and 109 of 4220 error.

Refer to section -8-"Inverter " under part [4] "Trouble shooting principal parts" for error codes related to the inverter.

Error Code		Error definition and error detection method	Cause	Check method and remedy
4220 4225	Logic error (Detail code No.111)	If only the H/W error logic circuit operates, and no identifiable error is detected.	**In the case of 4220** (1) External noise (2) Compressor INV board failure (3) G/A board failure (4) IPM failure (5) DCCT failure	Refer to 9 [4]-8-(2) [1] and replace the G/A board. Refer to 9 [4]-8-(2) [5] and replace DCCT.
			In the case of 4225 (1) External noise (2) FAN INV board failure	Refer to 9 [4]-8-(2) [7].
4230 4235	Heatsink overheat protection	**In the case of 4230** When the heat sink temperature (THHS1) 95°C [203°F] or higher is detected. **In the case of 4235** When the heat sink temperature (THHS1) 85°C [185°F] or higher is detected.	(1) Power supply environment	Measure the power supply voltage. Ensure that the power supply voltage is 187V or more between each phase.
			(2) Air passage blockage	Check that the heat sink cooling air passage is not blocked.
			(3) Faulty wiring	Check for cooling fan wiring.
			(4) THHS failure	Check for THHS sensor resistor.
			(5) Compressor INV board failure and cooling fan failure	Check that a voltage of 208/230V is applied to the compressor INV board connector CNFAN while the inverter is in operation.
			(6) Cooling failure	Check the cooling fan operation under the above operating conditions.
			(7) IPM failure	Refer to 9 [4]-8-(2) [2] "Check for compressor ground fault or coil error". Refer to 9 [4]-8-(2) [5] "Check the inverter circuit trouble".

Error Code		Error definition and error detection method	Cause	Check method and remedy
4240 4245	Overload protection	When the greater output current (Iac) than the Imax (Arms), or THHS of more than 90 °C [194°F] is detected for 10 minutes in a row. Imax P72 model: 40 Arms P96 model: 50 Arms P108 model: 50 Arms P126 model: 50 Arms P144 model: 53 Arms P168 model: 50 Arms P192 model: 50 Arms P204 model: 50 Arms P216 model: 53 Arms P234 model: 53 Arms	(1) Short cycle of the air passage	Check that the waste heat from the outdoor unit fan is not short cycled.
			(2) Air passage blockage	Check that the heat sink cooling air passage is not blocked.
			(3) Power supply	Check whether the power supply voltage is 187V or more.
			(4) Faulty wiring	Check for cooling fan wiring.
			(5) THHS failure	Check for THHS sensor resistor. In the case of 4240: THHS1 In the case of 4245: THHS5
			(6) Compressor INV board failure and cooling fan failure	Check that a voltage of 208/230V is applied to the compressor INV board connector CNFAN while the inverter is in operation.
			(7) Cooling failure	Check the cooling fan operation under the above operating conditions.
			(8) Current sensor (ACCT) failure	Refer to 9 [4]-8-(4). "Current sensor ACCT"
			(9) Compressor Inverter circuit failure	Refer to 9 [4]-8-(2) [4]. "Check whether the inverter is damaged".
			(10) Compressor failure	Check that the compressor has not overheated during operation. -> Check the refrigerant circuit (oil return section). Replace the compressor when no fault is found.

Refer to section -8-"Inverter " under part [4] "Trouble shooting principal parts" for error codes related to the inverter.

Error Code		Error definition and error detection method	Cause	Check method and remedy
4250 4255	IPM error (Detail code 101)	When an error signal of IPM is detected	**In the case of 4250** (1) Inverter output related (2) Same as 4230 error	Same as 4230 error
			In the case of 4255 (1) Fan motor abnormality (2) FAN INV board failure	Refer to 9 [4]-8-(2) [6]. Refer to 9 [4]-8-(2) [7].
	ACCT overcurrent breaker trip (Detail code 102) DCCT overcurrent breaker trip (Detail code 103) Overcurrent breaker trip (Detail code 106,107)	When overcurrent break (150 Apeak or 60 Arms) is detected by the current sensor.	(1) Inverter output related	9 [4]-8-(2) Inverter output related troubles Refer to [1] - [5].
	IPM short/ grounding fault (Detail code 104)	When IPM short damage or grounding on the load side is detected just before starting the inverter.	**In the case of 4250** (1) Grounding fault of compressor (2) Inverter output related	Refer to 9 [4]-8-(2).
			In the case of 4255 (1) Grounding fault of fan motor (2) FAN INV board failure	Refer to 9 [4]-8-(2) [6]. Refer to 9 [4]-8-(2) [7].
	Overcurrent error due to short-circuited motor (Detail code105)	When a short is detected on the compressor or the fan motor just before the inverter operation.	**In the case of 4250** (1) Short-circuited compressor (2) Output wiring (3) Power supply	Refer to 9 [4]-8-(2) [2].
			In the case of 4255 (1) Short-circuited fan motor (2) Output wiring (3) Power supply	Refer to [4]-8-(2) [6].
4260 4265	Cooling fan abnormality	**In the case of 4260** When the heat sink temperature (THHS1) 95°C [203°F] or more is detected for 10 or more minutes at inverter startup **In the case of 4265** When the heat sink temperature (THHS5) 85°C [185°F] or more is detected for 10 or more minutes at inverter startup	Same as 4230 error	Refer to Same as 4230 error.

Refer to section -8-"Inverter " under part [4] "Trouble shooting principal parts" for error codes related to the inverter.

Temperature sensor failure (indoor unit)				
Error Code		Error definition and error detection method	Cause	Check method and remedy
5101	Air inlet	If a short or an open is detected during thermostat ON, the outdoor unit turns to anti-restart mode for 3 minutes. When the error is not restored after 3 minutes (if restored, the outdoor unit runs normally), the outdoor unit makes an error stop. Short: detectable at 90°C [194°F] or higher Open : detectable at -40°C [-40°F] or lower *Sensor error at gas-side cannot be detected under the following conditions. ♦During heating operation ♦During cooling operation for 3 minutes after the compressor turns on.	(1) Thermistor failure (2) Connector contact failure (3) Disconnected wire or partial disconnected thermistor wire (4) Unattached thermistor or contact failure	Check the thermistor resistor. 0°C [32°F]: 15 kohm 10°C [50°F]: 9.7 kohm 20°C [68°F] : 6.4 kohm 30°C [86°F] : 4.3 kohm 40°C [104°F] : 3.1 kohm
5102	Liquid pipe			
5103	Gas pipe			
5104	Outdoor air temperature		(5) Indoor board (detection circuit) failure	Check the connector contact. When no fault is found, the indoor board is a failure.

(OA processing unit)				
Error Code		Error definition and error detection method	Cause	Check method and remedy
5104	Outdoor air temperature	-	(1) The connector (CN29) is not connected tightly. (2) The outdoor air temperature sensor is broken.	Check the contact of the connector. Replace the sensor.

Temperature sensor failure (outdoor unit)

Error Code		Error definition and error detection method	Cause	Check method and remedy
5101	Discharge (TH1)	1. When a short (high temperature intake) or an open (low temperature intake) of the thermistor is detected (the first detection), the outdoor unit stops, turns to anti-restart mode for 3 minutes, and restarts when the detected temperature of the thermistor. 2. When a short or an open is detected again (the second detection) after the first restart of the outdoor unit, the outdoor unit stops, turns to anti-restart mode for 3 minutes, and restarts in 3 minutes when the detected temperature is within the normal range. 3. When a short or an open is detected again (the third detection) after the previous restart of the outdoor unit, the outdoor unit makes an error stop. 4. When a short or an open of the thermistor is detected just before the restart of the outdoor unit, the outdoor unit makes an error stop, and the error code "5101", "5103", "5104", "5105", "5106", "5107" or "5108" will appear. 5. During 3-minute anti-restart mode, preliminary errors will be displayed on the LED display. 6. A short or an open described above is not detected for 10 minutes after the compressor start, during defrost mode, or for 3 minutes after defrost mode.	(1) Thermistor failure	Check thermistor resistance.
5105	Piping (TH5)		(2) Pinched lead wire	Check for pinched lead wire.
5106	Outdoor air temperature (TH6)		(3) Torn wire coating	Check for wire coating.
5107	SC coil outlet (TH7)		(4) A pin on the male connector is missing or contact failure	Check connector.
5108	SC coil bypass outlet (TH8)		(5) Disconnected wire	Check for wire.
			(6) Thermistor input circuit failure on the main board	Check the intake temperature of the sensor with the LED monitor. When the temperature is far different from the actual temperature, replace the control board.

	Short detection	Open detection
TH1	240 ˚C [464 ˚F] and above (0.57 kΩ)	0 ˚C [32˚F] and below (643 kΩ)
TH5	110 ˚C [230 ˚F] and above (0.4 kΩ)	-40 ˚C [-40˚F] and below (130 kΩ)
TH6	110 ˚C [230 ˚F] and above (0.4 kΩ)	-40 ˚C [-40˚F] and below (130 kΩ)
TH7	70 ˚C [158 ˚F] and above (1.14 kΩ)	-40 ˚C [-40˚F] and below (130 kΩ)
TH8	70 ˚C [158 ˚F] and above (0.4 kΩ)	-40 ˚C [-40˚F] and below (130 kΩ)

Error Code		Error definition and error detection method	Cause	Check method and remedy
5110	Heat sink failure Detail code No. 01: Compressor INV side Detail code No. 05: Fan INV side	When a short or an open of THHS is detected just before or during the inverter operation.	(1) THHS sensor failure	Check for short circuit in THHS sensor.
			(2) Contact failure	Replace THHS sensor.
			(3) Compressor INV board or fan INV board failure	Replace compressor INV board or fan INV board.

Refer to section -8- "Inverter " under part [4] "Trouble shooting principal parts" for error codes related to the inverter.

Error Code		Error definition and error detection method	Cause	Check method and remedy
5201	High pressure sensor (outdoor unit)	1. If the high pressure sensor detects 0.098MPa [14psi] or less during the operation, the outdoor unit stops once, turns to anti-restart mode for 3 minutes, and restarts after 3 minutes when the detected high pressure sensor is 0.098MPa [14psi] or more. 2. If the high pressure sensor detects 0.098MPa [14psi] or less just before the restart, the outdoor unit makes an error stop, and the error code "5201" will appear. 3. During 3-minute anti-restart mode, preliminary errors will be displayed on the LED display. 4. A error is not detected for 3 minutes after the compressor start, during defrost operation, or 3 minutes after defrost operation.	(1) High pressure sensor failure	Refer to the page on the troubleshooting of the high pressure sensor. (9 [4] -1-)
			(2) Pressure drop due to refrigerant leak	
			(3) Torn wire coating	
			(4) A pin on the male connector is missing or contact failure	
			(5) Disconnected wire	
			(6) High pressure sensor input circuit failure on the main board	

Error Code		Error definition and error detection method	Cause	Check method and remedy
5301	ACCT sensor circuit failure (Detail code 117)	When an error value is detected with the ACCT detection circuit just before the inverter starts	(1) Compressor INV board failure	Refer to 9 [4]-8-(2) [1] "Check the compressor INV board error detection circuit"
			(2) Grounding fault of compressor and IPM failure	Refer to 9 [4]-8-(2) [2] "Check for compressor ground fault or coil error" Refer to9 [4]-8-(2) [5] "Check the inverter circuit trouble"
	DCCT sensor circuit failure (Detail code 118)	When an error value is detected with the DCCT detection circuit just before the inverter starts	(1) Contact failure	Check the contact of the connector (CNCT) on the INV board, and the contact the connector on DCCT side.
			(2) Compressor INV board failure	Refer to 9 [4]-8-(2) [1] "Check the compressor INV board error "
			(3) DCCT failure	When no fault is found with items 1 and 2, replace the DCCT sensor, and check the polarity of DCCT sensor.
			(4) Grounding fault of the compressor and IPM failure	Refer to 9 [4]-8-(2) [2] "Check for compressor ground fault or coil error" Refer to9 [4]-8-(2) [5] "Check the inverter circuit trouble"
	ACCT sensor failure (Detail code 115)	When the effective output current between -2 Arms and 2 Arms is detected during inverter operation	(1) Contact failure	Check the contact of the connector CNCT2 (ACCT) on the compressor INV board.
			(2) ACCT sensor failure	Replace the ACCT sensor.
	DCCT sensor failure (Detail code 116)	When the bus current less than 18 Apeak is detected at startup	(1) Contact failure	Check the contact of the connector CNCT (DCCT) on the compressor INV board, and the contact around the connector on DCCT side.
			(2) Misorientation	Check the installation direction of DCCT.
			(3) DCCT sensor failure	Replace the DCCT sensor.
			(4) Compressor INV board failure	Replace the compressor INV board.
	IPM open/Disconnected ACCT connector (Detail code 119)	When IPM open damage or disconnected CNCT2 is not detected just before INV starts (Sufficient current is not detected just before startup)	(1) Disconnected ACCT sensor	Check the connector CNCT2 connection.(Check ACCT installation state)
			(2) Faulty wiring	Check CNDR2 connection on the compressor INV board, or CNDR1 connection on the G/A board.
			(3) ACCT sensor failure	Refer to9 [4]-8-(4) "Current sensor ACCT" , and check the resistance value.
			(4) Disconnected compressor wiring	Refer to9 [4]-8-(2) [2] "Check for compressor ground fault or coil error"
			(5) Compressor INV circuit failure	Refer to9 [4]-8-(2) [5] "Check the inverter circuit trouble"
	ACCT faulty wiring detection (Detail code 120)	ACCT sensor is not securely mounted.	(1) Wrongly mounted ACCT sensor	Refer to 9 [4]-8-(4) "Current sensor ACCT"

Refer to section -8- "Inverter " under part [4] "Trouble shooting principal parts" for error codes related to the inverter.

2. Transmission error

Error Code	Error definition and error detection method	Cause	Check method and remedy
6201	Remote controller board failure An error occurs when the data cannot be read normally from the nonvolatile memory built in on the remote controller.	Remote controller failure	Replace the remote controller.
6202	Remote controller board failure An error occurs when the clock function built in on the remote controller does not work normally.	Remote controller failure	Replace the remote controller.
6600	Address overlaps The error is detected when the same address is transmitted from different units. **Note: The address/attribute appeared on the display on the remote controller indicates the controller where an error occurred.**	Two or more remote controllers for the outdoor units, the indoor units, LOSSNAY, and the M-NET remote controllers have the same addresses. <Example> The error code 6600 "01" appeared on the display on the remote controller indicates that an error occurred in No.1 unit. Two or more units whose addresses are 01 exist in the same system.	Search for the unit which has the same address with that of the source of the trouble. **When the same address is found, turn off the power of the outdoor unit, LOSSNAY and the indoor unit for 5 minutes or more after changing the address, and then turn them on it again.**
6601	Unset polarity The error detected when transmission processor cannot distinguish the polarities of the M-NET transmission line.	(1) No voltage is applied to the M-NET transmission line that G-50A is connected to. (2) M-NET transmission line to which G-50A is connected is short-circuited.	Check if power is supplied to the M-NET transmission line of the G-50A, and correct any problem found.

Error Code	Error definition and error detection method	Check method and remedy
6602	Transmission processor hardware error Although "0" was surely transmitted by the transmission processor, "1" is displayed on the transmission line. **The address/attribute appeared on the display on the remote controller indicates the controller where an error occurred.**	(1) When the wiring work of or the polarity of either the indoor or outdoor transmission line is performed or is changed while the power is on, the transmitted data will collide, the wave shape will be changed, and an error will be detected. (2) Grounding fault of the transmission line (3) When grouping the indoor units that are connected to different outdoor units, the male power supply connectors on the multiple outdoor units are connected to the female power supply switch connector (CN40). (4) When the power supply unit for transmission lines is used in the system connected with MELANS, the male power supply connector is connected to the female power supply switch connector (CN40) on the outdoor unit. (5) Controller failure of the source of the error (6) When the transmission data is changed due to the noise on the transmission line (7) Voltage is not applied on the transmission line for centralized control (in case of grouped indoor units connected to different outdoor units or in case of the system connected with MELANS)
		Check method and remedy 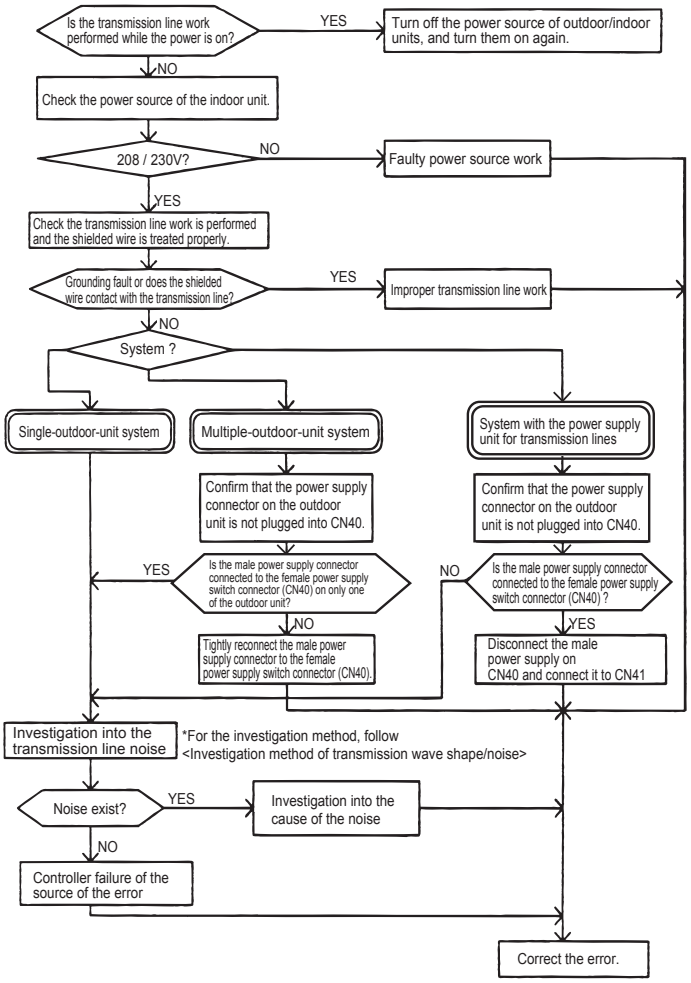

Error Code	Error definition and error detection method	Cause	Check method and remedy
6603	Transmission circuit bus-busy 1. Generated error when the command cannot be transmitted for 4-10 minutes in a row due to bus-busy 2. Generated error when the command cannot be transmitted to the transmission line for 4-10 minutes in a row due to noise **Note: The address/attribute appeared on the display on the remote controller indicates the controller where an error occurred.**	(1) The transmission processor cannot be transmitted as the short-wavelength voltage like noise exists consecutively on the transmission line. (2) Error source controller failure	No noise indicates that the error source controller is a failure. If noise exists, investigate the noise. -> No noise indicates that the error source controller is a failure. -> If noise exists, investigate the noise.
6606	Communication error with the transmission processor Communication error between the main microcomputer on the indoor unit board and the microcomputer for transmission **Note: The address/attribute appeared on the display on the remote controller indicates the controller where an error occurred.**	(1) Data is not properly transmitted due to accidental erroneous operation of the controller of the error source. (2) Error source controller failure	Turn off the power source of the outdoor and the indoor units.(When the power source is turned off separately, the microcomputer will not be reset, and the error will not be corrected.) -> If the same error occurs, the error source controller is a failure.

(1) System with one outdoor unit

Error Code	Error definition and error detection method	
6607	No ACK abnormality	The error is detected when no acknowledgement (ACK signal) is received after the transmission. (eg. When the data is transmitted six times in a row with 30 seconds interval, the error is detected on the transmission side.) **Note: The address/attribute appeared on the display on the remote controller indicates the controller which did not provide the response (ACK).**

Error source address	Error display	Detection method	Cause	Check method and remedy
Outdoor unit (OC)	M-NET remote controller (RC) MA remote controller (MA)	No acknowledgement (ACK) at IC transmission to OC	(1) Contact failure of transmission line of OC or IC (2) Decrease of transmission line voltage/signal by exceeding acceptable range of transmission wiring . Farthest: 200 m [656ft] or less Remote controller wiring: 10m [656ft] or less (3) Erroneous sizing of transmission line (Not within the range below). Wire diameter: 1.25mm^2 [AWG16] or more (4) Indoor unit main board failure	Turn off the power source of the outdoor unit, and turn it on again. If the error is accidental, it will run normally. If not, check the causes (1) - (4).
Indoor unit (IC)	M-NET remote controller (RC) MA remote controller (MA)	No acknowledgement (ACK) at RC transmission to IC	(1) When IC unit address is changed or modified during operation. (2) Faulty or disconnected IC transmission wiring (3) Disconnected IC connector (CN2M) (4) Indoor unit board failure (5) M-NET remote controller failure	Turn off the outdoor/indoor units for 5 or more minutes, and turn them on again. If the error is accidental, they will run normally. If not, check the causes (1) - (5).
LOSSNAY (LC)	M-NET remote controller (RC) MA remote controller (MA)	No acknowledgement (ACK) at IC transmission to LC	(1) The power source of LOSSNAY has been shut off. (2) When the address of LOSSNAY is changed in the middle of the operation (3) Faulty or disconnected transmission wiring of LOSSNAY (4) Disconnected connector (CN1) on LOSSNAY (5) Controller failure of LOSSNAY	Turn off the power source of LOSSNAY and turn it on again. If the error is accidental, it will run normally. If not, check the causes (1) - (5).
M-NET remote controller(RC)	M-NET remote controller (RC) MA remote controller (MA)	No acknowledgement (ACK) at IC transmission to RC	(1) Faulty transmission wiring at IC unit side. (2) Faulty wiring of the transmission line for M-NET remote controller (3) When the address of M-NET remote controller is changed in the middle of the operation (4) M-NET remote controller failure	Turn off the power source of the outdoor unit for 5 minutes or more, and turn it on again. If the error is accidental, it will run normally. If not, check the causes (1) - (4).

(2) Grouping of units in a system with multiple outdoor units

Error Code	Error definition and error detection method	
6607 (Continued)	No ACK abnormality	The error is detected when no acknowledgement (ACK signal) is received after the transmission. (eg. When the data is transmitted six times in a row with 30 seconds interval, the error is detected on the transmission side.) **Note: The address/attribute appeared on the display on the remote controller indicates the controller which did not provide the response (ACK).**

Error source address	Error display	Detection method	Cause	Check method and remedy
Outdoor unit (OC)	M-NET remote controller (RC) MA remote controller (MA)	No acknowledgement (ACK) at IC transmission to OC	Same cause as that for system with one outdoor unit	Same remedy as that for system with one outdoor unit
Indoor unit (IC)	M-NET remote controller (RC) MA remote controller (MA)	No acknowledgement (ACK) at RC transmission to IC	(1) Same causes as (1) - (5) for system with one outdoor unit (2) Disconnection or short circuit of the transmission line for the outdoor unit on the terminal block for centralized control line connection (TB7) (3) When multiple outdoor units are connected and the power source of one of the outdoor units has been shut off. (4) The male power supply connector of the outdoor unit is not connected to the female power supply switch connector (CN40). (5) The male power supply connectors on 2 or more outdoor units are connected to the female power supply switch connector (CN40) for centralized control. If an error occurs, after the unit runs normally once, the following causes may be considered. •Total capacity error (7100) •Capacity code error (7101) •Error in the number of connected units (7102) •Address setting error (7105)	1) Turn off the power sources of the outdoor and indoor units for 5 or more minutes, and turn them on again. If the error is accidental, the will run normally.If not, check the cause 2). 2) Check the causes of (1) - (5). If the cause is found, correct it. If no cause is found, check 3). 3) Check the LED displays for troubleshooting on other remote controllers whether an error occurs. If an error is found, -> If an error is found, check the check code definition, and correct the error. If no error is found, -> Indoor unit board failure
LOSSNAY (LC)	M-NET remote controller (RC) MA remote controller (MA)	No acknowledgement (ACK) at IC transmission to LC	(1) Same causes as (1) - (5) for system with one outdoor unit (Interlocked operation between LOSSNAY and the indoor units in the system in which the indoor units connected to different outdoor units are grouped) (2) Disconnection or short circuit of the transmission line for the outdoor unit on the terminal block for centralized control line connection (TB7) (3) When multiple outdoor units are connected and the power source of one of the outdoor units has been shut off. (4) The male power supply connector of the outdoor unit is not connected to the female power supply switch connector (CN40). (5) The male power supply connectors on 2 or more outdoor units are connected to the female power supply switch connector (CN40) for centralized control. If an error occurs, after the unit runs normally once, the following causes may be considered. •Total capacity error (7100) •Capacity code error (7101) •Error in the number of connected units (7102) •Address setting error (7105)	1) Turn off the power source of LOSSNAY for 5 or more minutes, and turn it on again. If the error is accidental, it will run normally.If not, check the cause 2). 2) Check the causes of (1) - (5). If the cause is found, correct it. If no cause is found, check 3). 3) Same cause as that for indoor unit described in 3)

(2) Grouping of units in a system with multiple outdoor units

Error Code	Error definition and error detection method	
6607 (Continued)	No ACK abnormality	The error is detected when no acknowledgement (ACK signal) is received after the transmission. (eg. When the data is transmitted six times in a row with 30 seconds interval, the error is detected on the transmission side.) **Note:The address/attribute appeared on the display on the remote controller indicates the controller which did not provide the response (ACK).**

Error source address	Error display	Detection method	Cause	Check method and remedy
M-NET remote controller (RC)	M-NET remote controller (RC) MA remote controller (MA)	No acknowledgement (ACK) at IC transmission to RC	(1) Same causes as (1) - (4) for system with one outdoor unit (2) Disconnection or short circuit of the transmission line for the outdoor unit on the terminal block for centralized control line connection (TB7) (3) When multiple outdoor units are connected and the power source of one of the outdoor units has been shut off. (4) The male power supply connector of the outdoor unit is not connected to the female power supply switch connector (CN40). (5) The male power supply connectors on 2 or more outdoor units are connected to the female power supply switch connector (CN40) for centralized control. If an error occurs, after the unit runs normally once, the following causes may be considered. •Total capacity error (7100) •Capacity code error (7101) •Error in the number of connected units (7102) •Address setting error (7105)	1) Turn off the power source of LOSSNAY for 5 or more minutes, and turn it on again. If the error is accidental, it will run normally.If not, check the cause 2). 2) Check the causes of (1) - (5). If the cause is found, correct it. If no cause is found, check 3). 3) Same cause as that for indoor unit described in 3)

(3) System connected to the system controllers (MELANS)

Error Code	Error definition and error detection method	
6607 (Continued)	No ACK abnormality	The error is detected when no acknowledgement (ACK signal) is received after the transmission. (eg. When the data is transmitted six times in a row with 30 seconds interval, the error is detected on the transmission side.) **Note: The address/attribute appeared on the display on the remote controller indicates the controller which did not provide the response (ACK).**

Error source address	Error display	Detection method	Cause	Check method and remedy
Outdoor unit (OC)	M-NET remote controller (RC) system controller (SC) MA remote controller (MA)	No acknowledgement (ACK) at IC transmission to OC	Same cause as that for system with one outdoor unit	Same remedy as that for system with one outdoor unit
Indoor unit (IC)	M-NET remote controller (RC) MA remote controller (MA)	No acknowledgement (ACK) at RC transmission to IC	Same as grouping of units in a system with multiple outdoor units	Same remedy as that for grouping of units in a system with multiple outdoor units
	system controller (SC)	No acknowledgement (ACK) at SC transmission to IC	1. Error occurrence on some IC (1) Same cause as that for system with one outdoor unit	Same remedy as that for system with one outdoor unit
			2. Error occurrence on all IC in the system with one outdoor unit (1) Total capacity error (7100) (2) Capacity code error (7101) (3) Error in the number of connected units (7102) (4) Address setting error (7105) (5) Disconnection or short circuit of the transmission line for the outdoor unit on the terminal block for centralized control line connection (TB7) (6) Turn off the power source of the outdoor unit (7) Malfunction of electrical system for the outdoor unit	1) Check the LED display for troubleshooting on the outdoor unit. ->If an error is found, check the check code definition, and correct the error. ->If no error is found, check 2). 2) Check (5) - (7) on the left.
			3. Error occurrence on all IC (1) Same causes as (1) - (7) described in 2. (2) The male power supply connectors on 2 or more outdoor units are connected to the female power supply switch connector (CN40) for the transmission line for centralized control. (3) Disconnection or shutdown of the power source of the power supply unit for transmission line (4) System controller (MELANS) malfunction	Check voltage of the transmission line for centralized control. 20V or more : Check (1) and (2) on the left. Less than 20V : Check (3) on the left.

Error Code	Error definition and error detection method	
6607 (Continued)	No ACK abnormality	The error is detected when no acknowledgement (ACK signal) is received after the transmission. (eg. When the data is transmitted six times in a row with 30 seconds interval, the error is detected on the transmission side.) **Note: The address/attribute appeared on the display on the remote controller indicates the controller which did not provide the response (ACK).**

Error source address	Error display	Detection method	Cause	Check method and remedy
M-NET remote controller (RC)	M-NET remote controller (RC) System controller (SC) MA remote controller (MA)	No acknowledgement (ACK) at IC transmission to RC	Same as grouping of units in a system with multiple outdoor units	Same remedy as that for grouping of units in a system with multiple outdoor units
	system controller (SC)	No acknowledgement (ACK) at MELANS transmission to RC	1. Error occurrence on some IC (1) Same cause as that for system with one outdoor unit	Same remedy as that for system with one outdoor unit
			2. Error occurrence on all IC in the system with one outdoor unit (1) An error is found by the outdoor unit. Total capacity error (7100) Capacity code error (7101) Error in the number of connected units (7102) Address setting error (7105) (2) Disconnection or short circuit of the transmission line for the outdoor unit on the terminal block for centralized control line connection (TB7) (3) Turn off the power source of the outdoor unit (4) Malfunction of electrical system for the outdoor unit	1) Check the LED display for troubleshooting on the outdoor unit. -> If an error is found, check the check code definition, and correct the error. -> If no error is found, check the cause 2). 2) Check (2) - (4) on the left.
			3. Error occurrence on all IC (1) Same causes as (1) - (4) described in 2. (2) When the power supply unit for transmission lines is used and the male power supply connector is connected to the female power supply switch connector (CN40) for the transmission line for centralized control (3) Disconnection or shutdown of the power source of the power supply unit for transmission line (4) System controller (MELANS) malfunction	Check (1) - (4) on the left.

(3) System connected to the system controllers (MELANS)

Error Code	Error definition and error detection method	
6607 (Continued)	No ACK abnormality	The error is detected when no acknowledgement (ACK signal) is received after the transmission. (eg. When the data is transmitted six times in a row with 30 seconds interval, the error is detected on the transmission side.) **Note: The address/attribute appeared on the display on the remote controller indicates the controller which did not provide the response (ACK).**

Error source address	Error display	Detection method	Cause	Check method and remedy
system controller (SC)	M-NET remote controller (RC) MA remote controller (MA))	No acknowledgement (ACK) at IC transmission to SC	1. Error display on some displays on M-NET remote controllers (1) Faulty wiring of the transmission line for M-NET remote controller (2) Disconnection or contact failure of the transmission connector for M-NET remote controller (3) M-NET remote controller failure	Check (1) - (3) on the left.
			2. Error occurrence on all IC in the system with one outdoor unit (1) An error is found by the outdoor unit. Total capacity error (7100) Capacity code error (7101) Error in the number of connected units (7102) Address setting error (7105) (2) Disconnection or short circuit of the transmission line for the outdoor unit on the terminal block for centralized control line connection (TB7) (3) Turn off the power source of the outdoor unit (4) Malfunction of electrical system for the outdoor unit	1) Check the LED display for troubleshooting on the outdoor unit. -> If an error is found, check the check code definition, and correct the error. -> If no error is found, check the cause 2) 2) Check (2) - (4) on the left.ÅB
			3. Error display on all displays on M-NET remote controllers (1) Same causes as (1) - (4) described in 2. (2) When the power supply unit for transmission lines is used and the male power supply connector is connected to the female power supply switch connector (CN40) for the transmission line for centralized control (3) Disconnection or shutdown of the power source of the power supply unit for transmission line (4) System controller (MELANS) malfunction	Check (1) - (4) on the left

(4) Errors that are not limited to a particular system

Error Code	Error definition and error detection method	
6607 (Continued)	No ACK abnormality	The error is detected when no acknowledgement (ACK signal) is received after the transmission. (eg. When the data is transmitted six times in a row with 30 seconds interval, the error is detected on the transmission side.) **Note: The address/attribute appeared on the display on the remote controller indicates the controller which did not provide the response (ACK).**

Error source address	Error display	Detection method	Cause	Check method and remedy
Address which should not be existed	-	-	(1) Although the address of M-NET remote controller has been changed after the group is set using M-NET remote controller, the indoor unit is keeping the memory of the previous address.The same symptom will appear for the registration with SC. (2) Although the address of LOSSNAY has been changed after the interlock registration of LOSSNAY is made using M-NET remote controller, the indoor unit is keeping the memory of the previous address.	Delete unnecessary information of non-existing address which some indoor units have. Use either of the following two methods for deletion. 1) Address deletion by M-NET remote controller Delete unnecessary address information using the manual setting function of M-NET remote controller. Refer to this service handbook "4. [2]. Group settings and interlock settings via the ME remote controller 1. (3) Address deletion". 2) Deletion of connection information of the outdoor unit by the deleting switch **Note that this switch deletes all the group information set via M-NET remote controller and all the interlock information of LOSSNAY and the indoor unit.** •Turn off the power source of the outdoor unit, and wait for 5 minutes. •Turn on the dip switch (SW2-2) on the outdoor unit main board. •Turn on the power source of the outdoor unit, and wait for 5 minutes. •Turn off the power source of the outdoor unit, and wait for 5 minutes. •Turn off the dip switch (SW2-2) on the outdoor unit main board. •Turn on the power source of the outdoor unit.

Error Code	Error definition and error detection method	Cause	Check method and remedy
6608	No response When no response command is returned although acknowledgement (ACK) is received after transmission, an error is detected. When the data is transmitted 10 times in a row with 3 seconds interval, an error is detected on the transmission side. **Note:The address/attribute appeared on the display on the remote controller indicates the controller where an error occurred.**	(1) The transmission line work is performed while the power is on, the transmitted data will collide, and the wave shape will be changed. (2) The transmission is sent and received repeatedly due to noise. (3) Decrease of transmission line voltage/signal by exceeding acceptable range of transmission wiring. Farthest : 200m [656ft] or less Remote controller wiring: 12m [39ft] or less (4) The transmission line voltage/signal is decreased due to erroneous sizing of transmission line. Wire diameter: 1.25mm^2 [AWG16] or more	1) When an error occurs at commissioning Turn off the power source of the outdoor unit, indoor unit, and LOSSNAY for 5 or more minutes, and turn them on again. -> When they return to normal operation, the cause of the error is the transmission line work performed with the power on. -> If an error occurs again, check the cause 2). 2) Check (3) and (4) on the left. -> If the cause is found, correct it. -> If no cause is found, check 3). 3) Check transmission wave shape/noise on trans-mission line by following <Investigation method of transmission wave shape/noise>. **Noise is the most possible cause of the error "6608".**

Error Code	Error definition and error detection method	Cause	Check method and remedy
6831	MA communication error or no reception error Communication between the MA remote controller and the indoor unit is not done properly. No proper data has been received for 3 minutes.	(1) Contact failure of the remote controller lines of MA remote controller or the indoor unit. (2) All the remote controllers are set to SUB. (3) Failure to meet wiring regulations •Wire length •Wire size •Number of remote controllers •Number of indoor units (4) The remote controller is removed after the installation without turning the power source off. (5) Noise interference on the remote controller transmission lines (6) Faulty circuit that is on the indoor board and performs transmission/reception of the signal from the remote controller (7) Problems with the circuit on the remote controller that sends or receives the signals from the remote controller	1) Check for disconnected or loose transmission lines for the indoor units or MA remote controllers. 2) Confirm that the power is supplied to the main power source and the remote controller line. 3) Confirm that MA remote controller's capacity limit is not exceeded. 4) Check the sub/main setting of the MA remote controllers.One of them must be set to MAIN. 5) Diagnose the remote controller (described in the remote controller installation manual). [OK]: no problems with the remote controller (check the wiring regulations) [NO]: Replace the MA remote controller. [6832, 6833, ERC]: due to noise interference <Go to (5)> 6) Check wave shape/noise on MA remote controller line by following <4. Investigation method of transmission wave shape/noise>. 7) When no problems are found with items 1 through 6, replace the indoor unit board or the MA remote controller. The following status can be confirmed on LED1 and 2 on the indoor unit board. •LED1 is lit. The main power source of the indoor unit is turned on. •LED2 is lit. MA remote controller line is being powered.
6834	MA communication error or start bit detection error Communication between the MA remote controller and the indoor unit is not done properly. No proper data has been received for 2 minutes.		
6832	MA communication error or synchronization recovery error Communication between the MA remote controller and the indoor unit is not done properly. Failure to detect opening in the transmission path and unable to send signals Indoor unit : 3 minutes Remote controller : 6 seconds	(1) Contact failure of the remote controller lines of MA remote controller or the indoor unit. (2) 2 or more remote controllers are set to MAIN. (3) Overlapped indoor unit address (4) Noise interference on the remote controller lines (5) Failure to meet wiring regulations •Wire length •Wire size •Number of remote controllers •Number of indoor units (6) Problems with the circuit on the remote controller that sends or receives the signals from the remote controller	
6833	MA communication error or transmission/reception H/W error Communication between the MA remote controller and the indoor unit is not done properly. An error occurs when the transmitted data and the received data differ for 30 times in a row.		

3. System error

<table>
<tr><th>Error Code</th><th>Error source</th><th>Error definition and error detection method</th><th>Cause</th><th>Check method and remedy</th></tr>
<tr><td>7100</td><td>Outdoor unit</td><td>Total capacity error

The model total of indoor units in the system with one outdoor unit exceeds limitations.</td><td>The model total of indoor units in the system with one outdoor unit exceeds the following table.
<table>
<tr><th>Model</th><th>Capacity Total</th></tr>
<tr><td>P72</td><td>93</td></tr>
<tr><td>P96</td><td>125</td></tr>
<tr><td>P108</td><td>140</td></tr>
<tr><td>P126</td><td>164</td></tr>
<tr><td>P144</td><td>187</td></tr>
<tr><td>P168</td><td>218</td></tr>
<tr><td>P192</td><td>250</td></tr>
<tr><td>P204</td><td>265</td></tr>
<tr><td>P216</td><td>281</td></tr>
<tr><td>P234</td><td>304</td></tr>
</table></td><td>1) Check the model total (capacity code total) of indoor units connected.
2) Check the model name (capacity code) of the connected indoor unit set by the switch (SW2 on indoor unit board).

When the model name set by the switch is different from that of the unit connected, turn off the power source of the outdoor and the indoor units, and change the setting of the model name (capacity code).</td></tr>
<tr><td>7101</td><td>Outdoor unit
Indoor unit</td><td>Capacity code error

The model name (capacity code) of the connected indoor unit connected is inappropriate.</td><td>The model name (capacity code) set by the switch (SW2) is wrong.

*The capacity of the indoor unit can be confirmed by the self-diagnosis function (SW1 operation) of the outdoor unit.</td><td>1) Check the model name (capacity code) of the indoor unit which has the error source address set by the switch (SW2 on indoor unit board).
When the model name set by the switch is different from that of the unit connected, turn off the power source of the outdoor and the indoor units, and change the setting of the capacity code.</td></tr>
</table>

<table>
<tr><th>Error Code</th><th>Error source</th><th>Error definition and error detection method</th><th>Cause</th><th>Check method and remedy</th></tr>
<tr><td>7102</td><td>Outdoor unit</td><td>Error in the number of connected units

The number of connected indoor units is "0" or exceeds the allowable value.</td><td>(1) Number of indoor units connected to the outdoor terminal block (TB3) for indoor/outdoor transmission lines exceeds limitations described below.
<table>
<tr><th>Number of units</th><th>Restriction on the number of units</th></tr>
<tr><td rowspan="6">1) Total number of indoor units</td><td>1-13 : P72 model</td></tr>
<tr><td>1-16 : P96·P108 models</td></tr>
<tr><td>1-20 : P126 model</td></tr>
<tr><td>1-22 : P144 - P168 models</td></tr>
<tr><td>1-24 : P192 - P204 models</td></tr>
<tr><td>1-32 : P216·P234 models</td></tr>
<tr><td>2) Total number of LOSSNAY units (During auto address start-up only)</td><td>0 or 1</td></tr>
</table>
(2) Disconnected transmission line of the outdoor unit
(3) Short-circuited transmission line
When (2) and (3) apply, the following display will appear.
♦In case of M-NET remote controller
-> Nothing appears on the display as no power is supplied to the remote controller.
♦In the case of MA remote controller
-> "HO" will blink.</td><td>1) Check whether the number of units connected to the outdoor terminal block (TB3) for indoor/outdoor transmission lines does not exceed the limitation. (See (1) and (2) on the left.)
2) Check (2) - (3) on the left.
3) Check whether the transmission line for the terminal block for centralized control (TB7) is not connected to the terminal block for the indoor/outdoor transmission line (TB3).</td></tr>
<tr><td>7105</td><td>Outdoor unit</td><td>Address setting error

Erroneous setting of OC unit address</td><td>Erroneous setting of OC unit address
The address of outdoor unit is not being set to 51 - 100.</td><td>Check that the address of OC unit is set to 51- 100.Reset the address if it stays out of the range, while shutting the power source off.</td></tr>
<tr><td>7106</td><td>OA processing unit</td><td>Attribute setting error</td><td>MA remote controller intended for use with indoor units, such as an MA remote controller, is connected to the OA processing unit whose attribute is FU.</td><td>To operate the OA processing unit using remote controllers for indoor units, such as MA remote controller, set the DipSW3-1 on the OA processing unit to ON.
<table>
<tr><th>Operation method</th><th>SW 3-1</th></tr>
<tr><td>Interlock with the indoor unit</td><td>OFF</td></tr>
<tr><td>Direct operation with the MA remote controller</td><td>ON</td></tr>
</table></td></tr>
<tr><td>7110</td><td>Outdoor unit</td><td>Unset unit connection information error

The start-up of the unit has not completed normally in the system to which a transmission booster is connected.</td><td>When all power sources are turned off after the start-up of the unit has completed normally.
When the start-up of the unit has completed without turning on the power source of the transmission booster.
When the power source of the transmission booster is turned on afterwards.</td><td>1) Check whether the power source of the transmission is turned on.
2) Turn off the power sources of outdoor/indoor units and transmission booster, and turn them on again.</td></tr>
</table>

Error Code	Error source	Error definition and error detection method	Cause	Check method and remedy
7111	Indoor unit OA processing unit	**Remote controller sensor failure** This error occurs when the temperature data is not sent although the remote controller sensor is specified.	The remote controller without the temperature sensor (the wireless remote controller or the M-NET compact remote controller (mounted type)) is used and the remote controller sensor for the indoor unit is specified. (SW1-1 is ON.)	Replace the remote controller with the one with built-in temperature sensor.
7113	Outdoor unit	**Model setting error (short detection)**	Short-circuit Faulty wiring or contact failure	Check all main board connectors and rectify faulty connection.
7117	Outdoor unit	**Model setting error (Open detection)**	Disconnected connector, disconnected wire, or contact failure	Check for the contact of the connector CNTYP1, 4, 5 on the main board.
7130	Outdoor unit	**Incompatible units** The check code will appear when the indoor units with different refrigerant systems are connected.	The indoor unit that uses only R22 refrigerant is connected.The wrong unit model is connected. When connecting Mr. SLIM (A control) with M-NET, the connecting adapter for M-NET must be connected to the indoor unit.	Check the connected indoor unit model. Check whether the connecting adapter for M-NET is not connected to the indoor unit. (Connect the connecting adapter for M-NET to the outdoor unit.)

-2- PURY

1. Mechanical system

Error Code		Error definition and error detection method	Cause	Check method and remedy
0403	Serial communication error	Serial communication error between the main board and the INV board on the compressor, and between the main board and the INV board on the fan Detail code 01: Between the main board and the compressor INV board Detail code 05: Between the main board and the FAN INV board	(1) Faulty wiring	Check for wiring between the male connector (CNRS3B) on the main board and the male connector (CNRS1) on the compressor INV board or between the male connector (CNRS3A) on the main board and the male connector (CNRS2) on the FAN INV board and check for contact of the connectors. Check for contact of the connector (CNAC3) on the main board or of the connector (CNTR) on the FAN INV board.
			(2) Inverter address switch setting error	Check the setting for SW2-1 on the inverter board on the compressor. Confirm that the SW2-1 on the fan inverter board is set to ON.
			(3) Transformer failure	Measure voltages between pins 1 and 3 of the male connector (CNTR) on the FAN INV board.
			(4) Compressor INV board failure FAN INV board failure.	Replace the compressor INV board or the FAN INV board when the power turns on automatically, even if the power source is reset.

Refer to section -8- "Inverter " under part [4] "Trouble shooting principal parts" for error codes related to the inverter.

Error Code		Error definition and error detection method	Cause	Check method and remedy
1102	Abnormal discharge air temperature	1. If the discharge temperature of 120 °C[248°F] or more is detected during the above operation (the first detection), the outdoor unit stops once, turns to anti-restart mode for 3 minutes, and restarts after 3 minutes automatically. 2. If the discharge temperature of 120 °C[248°F] or more is detected again (the second detection) within 30 minutes after the second stop of the outdoor unit described above, the mode will be changed to 3-minute restart mode, then the outdoor unit will restart in 3 minutes. 3. If the discharge temperature of 120 °C [248°F] or more is detected (the third detection) within 30 minutes after the stop of the outdoor unit described above (regardless of the first or the second stop), the outdoor unit will make an error stop, and the error code "1102" will be displayed. 4. If the discharge temperature of 120 °C [248°F] or more is detected more than 30 minutes after the previous stop of the outdoor unit, the detection is regarded as the first detection, and the operation described in step 1 above will start. 5. For 30 minutes after the stop (the first stop or the second stop) of the outdoor unit, preliminary errors will be displayed on the LED display.	(1) Gas leak, gas shortage	Refer to the page on refrigerant amount evaluation.
			(2) Overload operation	Check operating conditions and operation status of indoor/outdoor units.
			(3) LEV failure on the indoor unit (4) BC controller LEV malfunction Cooling only : LEV3 Cooling main : LEV1,2,3 Heating only or heating main : LEV3 Defrost : FLEV3 (5) BC controller SVM1 and 2 malfunction -> Cooling only or defrost (6) BC controller SVA malfunction -> Cooling only or cooling main (7) BC controller SVB malfunction -> Heating only or heating main (8) Solenoid valve SV malfunction (4a-4d (P72-P144 models) ,4a-4d and 5a, 5b (P168-P234models)): heating only, heating main	Perform a heating operation and check the operation. Cooling: LEV on the indoor unit LEV1,2,3 SVM1,2 SVA Heating: LEV on the indoor unit LEV3 SVB SV4a - 4d SV5a,5b Refer to the page on troubleshooting LEV.
			(9) Port address setting error.	Confirm the port address of the indoor unit.
			(10) Closed ball valve	Confirm that the ball valve is fully open.
			(11) Outdoor fan (including fan parts) failure, motor failure, or fan controller malfunction -> Heating only or heating main Rise in discharge temp. by low pressure drawing for (3) - (11).	Check the fan on the outdoor unit. Refer to the section on troubleshooting the outdoor unit fan.
			(12) Gas leak between low and high pressures(4-way valve failure, compressor failure, solenoid valve SV1, SV2 failure)	Perform a cooling or heating operation and check the operation.
			(13) Thermistor failure (TH11,TH12)	Check the thermistor resistor.
			(14) Input circuit failure on the controller board thermistor	Check the inlet air temperature on the LED monitor and check for contact failure of the connector.

Error Code		Error definition and error detection method	Cause	Check method and remedy
1301	Abnormal low pressure	When starting the compressor from Stop Mode for the first time if low-pressure reads 0.098MPa[14psi] immediately before start-up, the operation immediately stops.	(1) Inner pressure drop due to a leakage. (2) Low pressure sensor failure (3) Short-circuited pressure sensor cable due to torn outer rubber (4) A pin on the male connector is missing. (5) Disconnected wire (6) Failure of the low pressure input circuit on the controller board	Refer to the section on troubleshooting the low pressure sensor.

Error Code		Error definition and error detection method	Cause	Check method and remedy
1302	Abnormal high pressure 1 (outdoor unit)	1. If the pressure of 3.87MPa[561psi] or higher is detected by the pressure sensor during operation (the first detection), the outdoor stops once, turns to anti-restart mode for 3 minutes, and restarts after 3 minutes automatically. 2. If the pressure of 3.87MP[561psi] or higher is detected by the pressure sensor again (the second detection) within 30 minutes after the first stop of the outdoor unit, the outdoor unit stops once, turns to anti-restart mode for 3 minutes, and restarts after 3 minutes automatically. 3. If the pressure of 3.87MP[561psi]a or higher is detected by the pressure sensor (the third detection) within 30 minutes of the second stop of the outdoor unit, the outdoor unit will make an error stop, and the error code "1302" will be displayed. 4. If the pressure of 3.87MPa[561psi] or higher is detected more than 30 minutes after the stop of the outdoor unit, the detection is regarded as the first detection, and the operation described in step 1 above will start. 5. For 30 minutes after the stop of the outdoor unit, preliminary errors will be displayed on the LED display. 6. The outdoor unit makes an error stop immediately when not only the pressure sensor but also the pressure switch detects $4.15^{+0,-0.15}$ MPa [$601^{+0,-22}$ psi]	(1) LEV failure on the indoor unit (2) BC controller LEV malfunction Heating only or heating main : Indoor LEV 3 Defrost : LEV3 (3) BC controller SVM1 and 2 malfunction ->Cooling only or defrost (4) BC controller SVA malfunction ->Cooling only or cooling main (5) BC controller SVB malfunction ->Heating only or heating main (6) Solenoid valve SV malfunction (4a-4d (P72-P144 models) ,4a-4d and 5a, 5b (P168-P234models)): heating only, heating main ->Heating only or heating main	Perform a heating operation and check the operation. Cooling: LEV on the indoor unit LEV1,2,3 SVM1,2 SVA Heating: LEV on the indoor unit LEV3 SVM2 SVB SV4a - 4d SV5a,5b Refer to the page on trouble-shooting for LEV and solenoid valve.
			(7) Port address setting error.	Confirm the port address of the indoor unit.
			(8) Closed ball valve	Confirm that the ball valve is fully open.
			(9) Short cycle on the indoor unit side (10) Clogged filter on the indoor unit (11) Reduced air flow due to dirty fan on the indoor unit fan (12) Dirty heat exchanger of the indoor unit (13) Indoor fan (including fan parts) failure or motor failure For (9) - (13), rise in high pressure caused by lowered condensing capacity in heating only or heating main operation.	Check the indoor units for problems and correct them, if any.
			(14) Short cycle on the outdoor unit (15) Dirty heat exchanger of the outdoor unit"	
			(16) Outdoor fan (including fan parts) failure, motor failure, or fan controller malfunction -> Heating only or heating main Rise in discharge temp. by low pressure drawing for (13) - (15).	Check the fan on the outdoor unit. Refer to the section on troubleshooting the outdoor unit fan.
			(17) Rise in high pressure cannot be controlled due to solenoid valve SV1 malfunction.	Refer to the section on troubleshooting the solenoid valve.
			(18) Thermistor failure (TH5 - TH7)	Check the thermistor resistor.
			(19) Pressure sensor failure	Refer to the page on the trouble-shooting of the high pressure sensor.
			(20) Failure of the thermistor input circuit and pressure sensor input circuit on the controller board	Check the temperature on the LED monitor and check for contact failure of the connector.
			(21) Faulty mounting of thermistor (TH5 - TH7)	
			(22) Disconnected male connector on the pressure switch (63H) or disconnected wire	

Error Code		Error definition and error detection method	Cause	Check method and remedy
1302	Abnormal high pressure 2 (outdoor unit)	If the pressure of 0.098MPa[14psi] or lower is registered on the pressure sensor immediately before start-up, it will trigger an abnormal stop, and error code "1302" will be displayed.	(1) Inner pressure drop due to a leakage. (2) Pressure sensor failure (3) Shorted-circuited pressure sensor cable due to torn outer rubber (4) A pin on the male connector on the pressure sensor is missing or contact failure (5) Disconnected pressure sensor cable (6) Failure of the pressure sensor input circuit on the controller board	Refer to the page on the troubleshooting of the high pressure sensor.
1500	Refrigerant overcharge	An error can be detected by the discharge temperature superheat. 1. If the discharge SH 10K [18°F] or less is detected during operation (the first detection), the outdoor unit stops at once, turns to anti-restart mode for 3 minutes, and restarts after 3 minutes automatically. 2. If the discharge SH 10K [18°F] or less is detected again within 30 minutes after first stop of the outdoor unit (the second detection), the outdoor unit will make an error stop, and the error code "1500" is displayed. 3. If discharge SH 10K [18°F] or less is detected more than 30 minutes after the outdoor unit stops, and the operation described in step 1 above will start. 4. For 30 minutes after the stop of the outdoor unit, preliminary errors will be displayed on the LED display.	(1) Overcharged refrigerant	Refer to the page on refrigerant amount evaluation.
			(2) Thermistor input circuit failure on the main board (3) Faulty mounting of thermistor (TH11, TH12)	Check the temperature and the pressure of the sensor on the LED monitor.

Error Code		Error definition and error detection method	Cause	Check method and remedy
2502	Drain pump failure (The error code blinks on the indoor unit in trouble.)	When the drain sensor detects water or its tip becomes immersed in water during drain pump operation.	(1) Drain pump malfunction (2) Clogged drain pump intake (3) Clogged drain pipe (4) Return water from drain pipe (Improper installation)	1) Check for drain pump malfunction ♦**Check whether there is water in the drain pan.** Check whether there is water in the drain pan. When the water level is approximately 10mm [13/32"] from the bottom of the drain pan, the drain pump may be normal. ♦**Check whether the drain pump operates properly.** Check whether the resistance of the drain pump is normal or the drain pump operates normally when the power supply is applied. 2) Check for clogged drain pump intake Check whether there is no dust around the drain pump intake. 3) Check for clogged drain pipe Check whether there is no clogging outside of the pipe body. 4) Check for return water. Pour approximately 1-liter water in the drain pump, and start the drain pump. When the water level in the drain pan becomes steadily lower, stop the pump, and check the amount of the return water to the drain pan. *When a large amount of water returns, the gradient of drain pipe may be the reason. Check whether the drain pipe is installed properly as the instructions in the installation manual say. Furthermore, check whether the gradient of the unit installation is horizontal. An error may occur due to return water depending on the gradient. (Target gradient approximately 0.5 °) After checking the above, when all normal, misdetection of the drain sensor is possible. ♦**Check the drain sensor.** Check the resistance value <Error reset method> Reset (error reset) the indoor unit in trouble with the remote controller.
	Drain pump failure (The error code blinks on all the indoor units in the system)	When the drain sensor detects water or its tip becomes immersed in water during drain pump operation on stopping indoor units.	(1) Drain pump malfunction (2) Clogged drain pump intake (3) Clogged drain pipe (4) Return water from drain pipe (Improper installation)	Same as above <Error reset method> Reset the power of the indoor unit in trouble.However, the reset with the remote controller (error reset) must be made 10 minutes later after the power has been reset. All the indoor units must be reset with the remote controller.

Error Code		Error definition and error detection method	Cause	Check method and remedy
2503	Drain sensor failure	When a short or an open is detected during operation (cannot be detected during OFF). Short : detectable at 90°C [194°F] or higher Open : detectable at -20°C [-4°F] or lower	(1) Thermistor failure (2) Connector contact failure (loose connector) (3) Disconnected wire or partial disconnected thermistor wire	Check the thermistor resistance. 0°C [32°F] : 6.0 kohm 10°C [50°F] : 3.9 kohm 20°C [68°F] : 2.6 kohm 30°C [86°F] : 1.8 kohm 40°C [104°F] : 1.3 kohm
			Indoor board (detection circuit) failure	Check the connector contact. If no fault is found, the indoor board is a failure.
2600	Water leakage	-	Water leaks from the pipes in such as the humidifier.	Check the location of the leak.
2601	Water supply cut-off	-	(1) The water tank of the humidifier is empty.	Check the amount of supply water. Check for the solenoid valve and for the connection.
			(2) The solenoid valve for humidification is OFF.	Check the connector.
			(3) Disconnected float switch	Check the connecting part.
			(4) Poor operation of float switch	Check for the float switch.
			(5) Frozen water tank	Turn off the power source of the water tank to defrost, and turn it on again.
4103	Reverse phase/open phase	1. When turning on the power, the operation cannot be started because of the open phase of one of the power lines (L1, L2 or L3).	(1) Faulty wiring	♦Check whether the phase of the power supply terminal block (TB1) is normal. ♦Check the wiring between the power supply terminal block (TB1) and the main boards (CN20 and CN21). TB1 — Pin L1 — CN20 — 5Pin L2 — CN21 — 3Pin L3 — CN21 — 1Pin
			(2) Main board failure	If the above faults are not found, the main board is faulty.
		2. The operation cannot be started because of the reserve phase of one of the power lines (L1, L2 or L3).	(1) Power supply error ♦Open phase of power supply voltage ♦Power-supply voltage drop	Check the input resistance of the power supply terminal block (TB1).
			(2) Faulty wiring Between the power supply terminal block (TB1) and the main boards (CN20 and 21)	♦Measure voltages of pin 5 of the male connector (CN20) on the main board and between pins 1 and 3 of the male connector (CN21) on the main board. ♦If the voltage is not the same as the power supply voltage, the wiring is faulty.
			(3) A fuse is blown.	Check whether the fuses of the main board (both F01 and F02) are not blown.
			(4) Main board failure	If the above faults are not found, the main board is faulty.

Error Code		Error definition and error detection method	Cause	Check method and remedy
4108	Overcurrent protection	1. First detection If 51C2 is started during the operation of No.2 compressor, the outdoor unit stops once, turns to anti-restart mode for 3 minutes, and restarts after 3 minutes. (Set value of the over-current relay: 43A) 2. Second detection If 51C2 is started again within a minute after restarting in compliance with 1. above, the unit makes an error stop and the error code "4108" will appear. 3. There will be a minute grace period of an error stop when No.2 compressor restarts after the outdoor unit stops and LED indicates, which means the grace period, will appear.	(1) Overload operation that exceeds unit use limit	Check the unit working condition.
			(2) Power supply error •Power-supply voltage drop •Open phase of power supply voltage	Check the voltage of the power supply terminal block (TB1). Check for open phase.
			(3) Faulty wiring	Check 52C2 connector and the wiring.
			(4) Compressor failure •Compressor open phase or grounding fault •Compressor lock	Check the wiring and apply a megger to the compressor. Start operation under no-load conditions. Remove the power wire on the compressor-side, insulate the power line and start operation. -> The compressor is faulty if 52C2 normally turns on.
4115	Power supply sync signal abnormality	The frequency cannot be determined when the power is switched on.	(1) Power supply error	Check the voltage of the power supply terminal block (TB1).
			(2) A fuse is blown.	Check the fuses on the main board (F01 and F02).
			(3) Faulty wiring	Measure voltages of pin 5 of the male connector (CN20) on the main board and between pins 1 and 3 of the male connector (CN21) on the main board. If the voltage (AC208 / 230V) is not the same as the power supply voltage, the wiring is faulty.
			(4) Main board failure	If none of the items described above is applicable, and if the trouble reappears even after the power is switched on again, replace the MAIN board.
4116	Motor abnormality	1. LOSSNAY •The motor keep running even if the power is OFF. •The thermal overload relay is ON. (Only for the three-phase model) 2. Indoor unit If detected less than 180rpm or more than 2000rpm, the indoor unit will restart and keep running for 3 minutes. If detected again, the display will appear.	(1) Board failure	Replace the board.
			(2) Motor malfunction (3) Solenoid switch malfunction	Check for the motor and the solenoid switch.

Error Code		Error definition and error detection method	Cause	Check method and remedy
4220 4225	Bus voltage drop (Detail code 108)	If Vdc 150V or less is detected during Inverter operation. (S/W detection)	(1) Power supply environment	Check whether the unit makes an instantaneous stop when the detection result is abnormal or a power failure occurs. Check whether the power voltage is 150V or less across all phases.
			(2) Voltage drop detected	**In the case of 4220** Measure voltages of the male connector (CNDC2) on the compressor INV board. -> Replace the INV board when there is no voltage drop. -> Check the followings when there is a voltage drop. 1) Check the voltage of CN52C on the main board. Refer to (3). 2) Check whether 52C1 works normally. Refer to (4) or check 52C1 connecting piping. 3) Check for the diode stack. Refer to (5). 4) Check the wiring and the connectors between the CNDC2-G on the compressor INV board and the CNDC1 on the G/A board. Replace G/A board when no fault is found for the above 1) - 4). **In the case of 4225** Check the followings. 1) Check the voltage of CN52C1 on the main board. Refer to (3). 2) Check whether 52C1 works normally. Refer to (4). Or check 52C1 wire connection. 3) Check diode stack failure. Refer to (5). 4) Check the wiring and the connectors of the CNVDC on the FAN INV board. Replace FAN INV board when no fault is found for the above 1) - 4).
			(3) Main board failure	Check whether AC208 / 230 V is applied to the male connector (CN52C1) on the main board during inverter operation. -> If not applied, check the main board and the fuse (F01 andF02). Replace the main board when no fault is found.
			(4) 52C1 failure	Refer to 9.[4].8.(4) and check the coil resistance check.
			(5) Diode stack failure	Refer to 9.[4].8.(6) and check the diode stack resistance.
	Bus voltage rise (Detail code 109)	If Vdc 425V or more is detected during inverter operation.	(1) Different voltage connection	Check the power supply voltage on the power supply terminal block (TB1).
			(2) INV board failure	Replace the INV board when no fault is found. In the case of 4220: Compressor INV board In the case of 4225: FAN INV board
	Abnormal VDC (Detail code 110)	Bus voltage abnormality If Vdc 400V or more or Vdc 160V or less is detected. (H/W detection)	Same as detail code No.108 and 109 of 4220 error.	Same as detail code No.108 and 109 of 4220 error.

Refer to section -8- "Inverter " under part [4] "Trouble shooting principal parts" for error codes related to the inverter.

Error Code		Error definition and error detection method	Cause	Check method and remedy
4220 4225	Logic error (Detail code No.111)	If only the H/W error logic circuit operates, and no identifiable error is detected.	**In the case of 4220** (1) External noise (2) Compressor INV board failure (3) G/A board failure (4) IPM failure (5) DCCT failure	Refer to 9 [4]-8-(2)[1]. Replace the G/A board. Refer to 9 [4]-8-(2)[5]. Replace DCCT.
			In the case of 4225 (1) External noise (2) FAN INV board failure	Refer to 9 [4]-8-(2) [7].
4230 4235	Heatsink overheat protection	**In the case of 4230** When the heat sink temperature(THHS1) 95°C [203°F] or higher is detected. **In the case of 4235** When the heat sink temperature (THHS5) 85°C [185°F] or higher is detected.	(1) Power supply environment	Measure the power supply voltage. Ensure that the power supply voltage is 187V or more between each phase.
			(2) Air passage blockage	Check that the heat sink cooling air passage is not blocked.
			(3) Faulty wiring	Check cooling fan wiring.
			(4) THHS failure	Check THHS sensor resistor.
			(5) Compressor INV board failure and cooling fan failure	Check that a voltage of 208/230V is applied to the compressor INV board connector CNFAN while the inverter is in operation.
			(6) Cooling failure	Check the cooling fan operation under the above operating conditions.
			(7) IPM failure	Refer to 9.[4].8.(2) [2] "Check for compressor ground fault or coil error". Refer to 9.[4].8.(2).[5] "Check the inverter circuit trouble"
4240 4245	Overload protection	When the greater output current (Iac) than the Imax (Arms), or THHS of more than 90°C [194°F] is detected for 10 minutes in a row.	(1) Short cycle of the air passage	Check that the waste heat from the outdoor unit fan is not short cycled.
			(2) Air passage blockage	Check that the heat sink cooling air passage is not blocked.
			(3) Power supply	Check whether the power supply voltage is 187V or more.
			(4) Faulty wiring	Check cooling fan wiring.
			(5) THHS failure	Check THHS sensor resistance. In the case of 4240: THHS1 In the case of 4245: THHS5
			(6) Compressor INV board failure and cooling fan failure	Check that a voltage of 208/230V is applied to the compressor INV board connector CNFAN while the inverter is in operation.
			(7) Cooling failure	Check the cooling fan operation under the above operating conditions.
			(8) Current sensor (ACCT) failure	Refer to 9.[4].8.(4) "Current sensor ACCT"
			(9) Compressor Inverter circuit failure	Refer to 9.[4].8.(2).[4] "Check whether the inverter is damaged"
			(10) Compressor failure	->Check that the compressor has not overheated during operation. Replace the compressor when no fault is found.

	Imax
P72 model	40 Arms
P96 model	50 Arms
P108 model	50 Arms
P126 model	50 Arms
P144 model	53 Arms
P168 model	50 Arms
P192 model	50 Arms
P204 model	50 Arms
P216 model	53 Arms
P234 model	53 Arms

Refer to section -8- "Inverter " under part [4] "Trouble shooting principal parts" for error codes related to the inverter.

Error Code		Error definition and error detection method	Cause	Check method and remedy
4250 4255	IPM error (Detail code 111)	When an error signal of IPM is detected	**In the case of 4250** (1) Inverter output related (2) Same as 4230 error	Same as 4230 error
			In the case of 4255 (1) Fan motor abnormality (2) FAN INV board failure	Refer to 9 [4]-8-(2) [6]. Refer to 9 [4]-8-(2) [7].
	ACCT overcurrent breaker trip (Detail code 102) DCCT overcurrent breaker trip (Detail code 103) Overcurrent breaking (Detail code 106,107)	When overcurrent break (150 Apeak or 60 Arms) is detected by the current sensor.	(1) Inverter output related	9.[4].8.(2) Inverter output related troubles Refer to [1] - [5].
	IPM short/ grounding fault (Detail code No.104)	When IPM short damage or grounding on the load side is detected just before starting the inverter.	**In the case of 4250** (1) Grounding fault of compressor. (2) Inverter output related	Refer to 9 [4]-8-(2).
			In the case of 4255 (1) Grounding fault of fan motor. (2) FAN INV board failure	Refer to 9 [4]-8-(2) [6]. Refer to 9 [4]-8-(2) [7].
	Overcurrent error due to short-circuited motor (Detail code No.105)	When a short is detected on the compressor or the fan motor just before the inverter operation.	**In the case of 4250** (1) Short-circuited compressor (2) Output wiring (3) Power supply	Refer to 9 [4]-8-(2) [2].
			In the case of 4255 (1) Short-circuited fan motor (2) Output wiring (3) Power supply	Refer to 9 [4]-8-(2) [6].
4260 4265	Cooling fan abnormality	**In the case of 4260** In the case of 4260 When the heat sink temperature (THHS1) 95°C [203°F] or more is detected for 10 or more minutes at inverter startup **In the case of 4265** When the heat sink temperature (THHS5) 85°C [185°F] or more is detected for 10 or more minutes at inverter startup	Same as 4230 error	Same as 4230 error

Refer to section -8- "Inverter " under part [4] "Trouble shooting principal parts" for error codes related to the inverter.

Temperature sensor failure (indoor unit)				
Error Code		Error definition and error detection method	Cause	Check method and remedy
5101	Air inlet	If a short or an open is detected during thermostat ON, the outdoor unit turns to anti-restart mode for 3 minutes. When the error is not restored after 3 minutes (if restored, the outdoor unit runs normally), the outdoor unit makes an error stop. Short : detectable at 90°C [194°F] or higher Open : detectable at -40°C [-40°F] or lower Sensor error at gas-side cannot be detected under the following conditions. ♦During heating operation ♦During cooling operation for 3 minutes after the compressor turns on.	(1) Thermistor failure (2) Connector contact failure (3) Disconnected wire or partial disconnected thermistor wire (4) Unattached thermistor or contact failure	Check the thermistor resistor. 0°C [32°F] : 15 kohm 10°C [50°F] : 9.7 kohm 20°C [68°F] : 6.4 kohm 30°C [86°F] : 4.3 kohm 40°C [104°F] : 3.1kohm
5102	Liquid pipe			
5103	Gas pipe			
5104	Outdoor air temperature		(5) Indoor board (detection circuit) failure	Check the connector contact. When no fault is found, the indoor board is a failure.

(OA processing unit)				
Error Code		Error definition and error detection method	Cause	Check method and remedy
5104	Outdoor air temperature	-	(1) The connector (CN29) is not connected tightly. (2) The outdoor air temperature sensor is broken.	Check the contact of the connector. Replace the sensor.

Temperature sensor failure (outdoor unit)

Error Code		Error definition and error detection method	Cause	Check method and remedy
5101	Discharge (TH11) (TH12)	1. When a short (high temperature intake) or an open (low temperature intake) of the thermistor is detected (the first detection), the outdoor unit stops, turns to anti-restart mode for 3 minutes, and restarts when the detected temperature of the thermistor 2. When a short or an open is detected again (the second detection) after the first restart of the outdoor unit, the outdoor unit stops, turns to anti-restart mode for 3 minutes, and restarts in 3 minutes when the detected temperature is within the normal range. 3. When a short or an open is detected again (the third detection) after the previous restart of the outdoor unit, the outdoor unit makes an error stop. 4. When a short or an open of the thermistor is detected just before the restart of the outdoor unit, the outdoor unit makes an error stop, and the error code "5101", "5103", "5104", "5105", "5106", or "5107" will appear. 5. During 3-minute anti-restart mode, preliminary errors will be displayed on the LED display. 6. A short or an open described above is not detected for 10 minutes after the compressor start, during defrost mode, or for 3 minutes after defrost mode.	(1) Thermistor failure	Check thermistor resistance.
5105	Piping (TH5)		(2) Pinched lead wire	Check for pinched lead wire.
5106	Outdoor air temperature (TH6)		(3) Torn wire coating	Check wire coating.
5107	Piping (TH7)		(4) A pin on the male connector is missing or contact failure	Check connector.
			(5) Disconnected wire	Check for wire.
			(6) Thermistor input circuit failure on the main board	Check the intake temperature of the sensor with the LED monitor. When the temperature is far different from the actual temperature, replace the control board.

	Short is detection	Open detection
TH11/TH12	240 °C [464 °F] and above (0.57 kΩ)	0 °C [32 °F] and below (643 kΩ)
TH5	110 °C [230 °F] and above (0.4kΩ)	-40 °C [-10 °F] and below (130 kΩ)
TH6	110 °C [230 °F] and above (0.4kΩ)	-40 °C [-40 °F] and below (130 kΩ)
TH7	70 °C [158 °F] and above (1.14kΩ)	-40 °C [-40 °F] and below (130 kΩ)

Error Code		Error definition and error detection method	Cause	Check method and remedy
5110	Heat sink failure Detail code No. 01: Compressor INV side Detail code No. 05: Fan INV side	When a short or an open of THHS is detected just before or during the inverter operation.	(1) THHS sensor failure	Check for short circuit in THHS sensor.
			(2) Contact failure	Replace THHS sensor.
			(3) Compressor INV board or fan INV board failure	Replace compressor INV board or fan INV board.

Refer to section - 8- "Inverter " under part [4] "Trouble shooting principal parts" for error codes related to the inverter.

Temperature sensor failure (BC controller)

Error Code		Error definition and error detection method	Cause	Check method and remedy
5111	Liquid inlet (TH11)	1. When a short (high temperature inlet) or an open (low temperature inlet) of the thermistor is detected during operation, an error stop will be made, and "5111", "5112", "5115", or "5116" will be displayed. 2. The short or open described above is not detected during defrost or 3 minutes after the operation mode is changed.	(1) Thermistor failure (2) Pinched lead wire (3) Torn wire coating (4) A pin on the male connector is missing or contact failure (5) Disconnected wire (6) Thermistor input circuit failure on the main board	Check thermistor resistance. Check lead wire. Check for torn wire coating. Check connector. Check the intake temperature of the sensor with the LED monitor. When the temperature is far different from the actual temperature, replace the control board.
5112	Bypass outlet (TH12)			
5115	LEV3 outlet (TH15)			
5116	LEV3 inlet (TH16)			

	Short is detection	Open detection
TH11	110˚C [230˚F] and above (0.57 kΩ)	-40˚C [-40˚F] and below (130 kΩ)
TH12	110˚C [230˚F] and above (0.4 kΩ)	-40˚C [-40˚F] and below (130 kΩ)
TH15	70˚C [158˚F] and above (0.4 kΩ)	-40˚C [-40˚F] and below (130 kΩ)
TH16	110˚C [230˚F] and above (1.14 kΩ)	-40˚C [-40˚F] and below (130 kΩ)

Error Code		Error definition and error detection method	Cause	Check method and remedy
5201	High pressure sensor (outdoor unit)	1. If the high pressure sensor detects 0.098MPa [14psi] or less during the operation, the outdoor unit stops once, turns to anti-restart mode for 3 minutes, and restarts after 3 minutes when the detected high pressure sensor is 0.098MPa [14psi] or more. 2. If the high pressure sensor detects 0.098MPa [14psi] or less just before the restart, the outdoor unit makes an error stop, and the error code "5201" will appear. 3. During 3-minute anti-restart mode, preliminary errors will be displayed on the LED display. 4. A error is not detected for 3 minutes after the compressor start, during defrost operation, or 3 minutes after defrost operation.	(1) High pressure sensor failure	Refer to the page on the troubleshooting of the high pressure sensor.(9 [4] -1-)
			(2) Pressure drop due to refrigerant leak	
			(3) Torn wire coating	
			(4) A pin on the male connector is missing or contact failure	
			(5) Disconnected wire	
			(6) High pressure sensor input circuit failure on the main board	

High pressure sensor failure (BC controller)				
Error Code		Error definition and error detection method	Cause	Check method and remedy
5201	Liquid side	When the pressure of 4.06MPa [589psi] or more is detected by the pressure sensor, an error code "5201" or "5203" will be displayed.However, an error stop is not made, and backup operation will be started by other sensors.	(1) High pressure sensor failure	Refer to the page on the troubleshooting of the high pressure sensor.(9 [4] -1-)
5203	Intermediate		(2) Inner pressure drop due to a leakage. (3) Torn wire coating (4) A pin on the male connector is missing or contact failure (5) Disconnected wire (6) High pressure sensor input circuit failure on the main board	

Error Code		Error definition and error detection method	Cause	Check method and remedy
5301	ACCT sensor circuit failure (Detail code 117)	When an error value is detected with the ACCT detection circuit just before the inverter starts	(1) Compressor INV board failure	Refer to 9. [4].8.(2). [1] "Check the compressor INV board error detection circuit"
			(2) Ground fault of compressor and IPM failure	Refer to 9. [4].8.(2). [2] "Check for compressor ground fault or coil error" Refer to 9. [4].8.(2). [5] "Check the inverter circuit trouble"
	DCCT sensor circuit failure (Detail code 118)	When an error value is detected with the DCCT detection circuit just before the inverter starts	(1) Contact failure	Check the contact of the connector (CNCT) on the INV board, and the contact the connector on DCCT side.
			(2) Compressor INV board failure	Refer to 9. [4].8.(2). [1] "Check the compressor INV board error detection circuit".
			(3) DCCT failure	When no fault is found with items 1 and 2, replace the DCCT sensor, and check the polarity of DCCT sensor.
			(4) Grounding fault of the compressor and IPM failure	Refer to 9. [4].8.(2). [2] "Check for compressor ground fault or coil error" Refer to 9. [4].8.(2). [1] "Check the compressor INV board error detection circuit" Refer to 9. [4].8.(2). [5] "Check the inverter circuit trouble"
	ACCT sensor failure (Detail code 115)	When the effective output current between -2 Arms and 2 Arms is detected during inverter operation	(1) Contact failure	Check the contact of the connector CNCT2 (ACCT) on the compressor INV board.
			(2) ACCT sensor failure	Replace the ACCT sensor.
	DCCT sensor failure (Detail code 116)	When the bus current of less than 18 Apeak is detected at startup (6Hz)	(1) Contact failure	Check the contact of the connector CNCT (DCCT) on the compressor INV board, and the contact around the connector on DCCT side.
			(2) Misorientation	Check the installation direction of DCCT.
			(3) DCCT sensor failure	Replace the DCCT sensor.
			(4) Compressor INV board failure	Replace the compressor INV board.
	Preliminary IPM open/Disconnected ACCT connector (Detail code119)	When IPM open damage or disconnected CNCT2 is not detected just before INV starts (Sufficient current is not detected just before startup)	(1) Disconnected ACCT sensor	Check the connector CNCT2 connection.(Check ACCT installation state)
			(2) Faulty wiring	Check CNDR2 connection on the compressor INV board, or CNDR1 connection on the G/A board.
			(3) ACCT sensor failure	Refer to 9. [4].8.(4)"Current sensor ACCT", and check the resistance value
			(4) Disconnected compressor wiring	Refer to 9. [4].8.(2). [2] "Check for compressor ground fault or coil error"
			(5) Compressor INV circuit failure	Refer to 9. [4].8.(2). [2] "Check for inverter circuit trouble"
	ACCT faulty wiring detection (Detail code120)	ACCT sensor is not securely mounted.	(1) Wrongly mounted ACCT sensor	Refer to 9. [4].8.(4) "Current sensor ACCT"

Refer to section - 8- "Inverter " under part [4] "Trouble shooting principal parts" for error codes related to the inverter.

2. Transmission error

Error Code	Error definition and error detection method	Cause	Check method and remedy
6201	Remote controller board failure An error occurs when the data cannot be read normally from the nonvolatile memory built in on the remote controller.	Remote controller failure	Replace the remote controller.
6202	Remote controller board failure An error occurs when the clock function built in on the remote controller does not work normally.	Remote controller failure	Replace the remote controller.
6600	Address overlaps The error is detected when the same address is transmitted from different units. **Note: The address/attribute appeared on the display on the remote controller indicates the controller where an error occurred.**	Two or more remote controllers for the outdoor units, the indoor units, LOSSNAY, and the M-NET remote controllers have the same addresses. <Example> The error code 6600 "01" appeared on the display on the remote controller indicates that an error occurred in No.1 unit. Two or more units whose addresses are 01 exist in the same system.	Search for the unit which has the same address with that of the source of the trouble. **When the same address is found, turn off the power of the outdoor unit, LOSSNAY and the indoor unit for 5 minutes or more after changing the address, and then turn them on it again.**
6601	Unset polarity The error detected when transmission processor cannot distinguish the polarities of the M-NET transmission line.	(1) No voltage is applied to the M-NET transmission line that G-50A is connected to. (2) M-NET transmission line to which G-50A is connected is short-circuited.	Check if power is supplied to the M-NET transmission line of the G-50A, and correct any problem found.

Error Code	Error definition and error detection method	Check method and remedy
6602	Transmission processor hardware error Although "0" was surely transmitted by the transmission processor, "1" is displayed on the transmission line **Note: The address/attribute appeared on the display on the remote controller indicates the controller where an error occurred.**	(1) When the wiring work of or the polarity of either the indoor or outdoor transmission line is performed or is changed while the power is on, the transmitted data will collide, the wave shape will be changed, and an error will be detected. (2) Grounding fault of the transmission line (3) When grouping the indoor units that are connected to different outdoor units, the male power supply connectors on the multiple outdoor units are connected to the female power supply switch connector (CN40). (4) When the power supply unit for transmission lines is used in the system connected with MELANS, the male power supply connector is connected to the female power supply switch connector (CN40) on the outdoor unit. (5) Controller failure of the source of the error (6) When the transmission data is changed due to the noise on the transmission line (7) Voltage is not applied on the transmission line for centralized control (in case of grouped indoor units connected to different outdoor units or in case of the system connected with MELANS)
		Check method and remedy 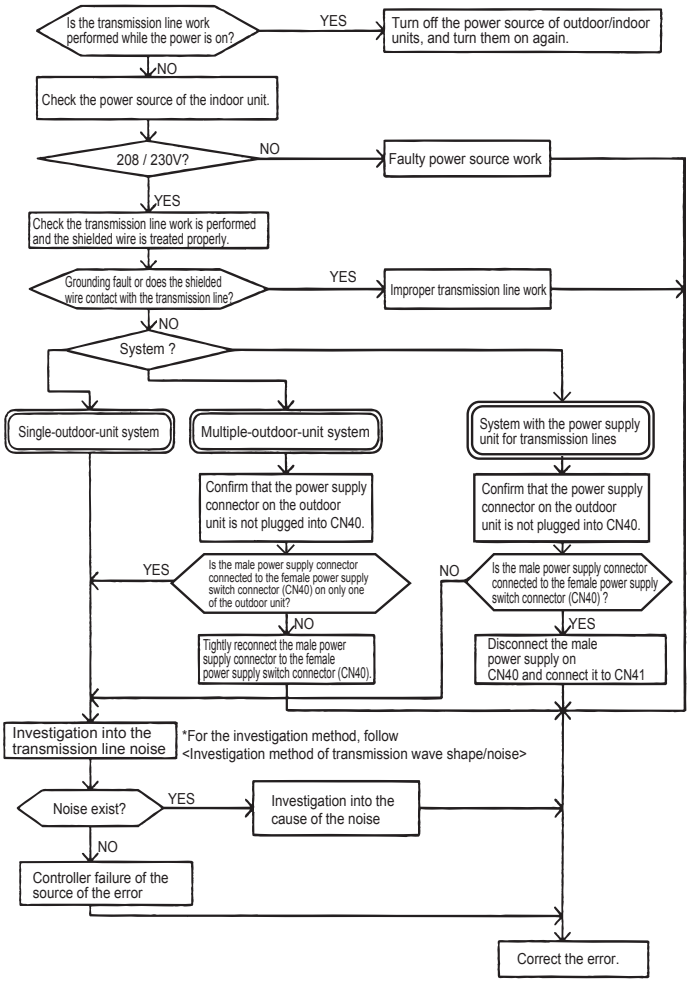

Error Code	Error definition and error detection method	Cause	Check method and remedy
6603	Transmission circuit bus-busy 1. Generated error when the command cannot be transmitted for 4-10 minutes in a row due to bus-busy 2. Generated error when the command cannot be transmitted to the transmission line for 4-10 minutes in a row due to noise **Note: The address/attribute appeared on the display on the remote controller indicates the controller where an error occurred.**	(1) The transmission processor cannot be transmitted as the short-wavelength voltage like noise exists consecutively on the transmission line. (2) Error source controller failure	Check transmission wave shape/noise on trans-mission line by following <Investigation method of transmission wave shape/noise>. -> No noise indicates that the error source controller is a failure. -> If noise exists, investigate the noise.
6606	Communication error with the transmission processor Communication error between the main microcomputer on the indoor unit board and the microcomputer for transmission **Note: The address/attribute appeared on the display on the remote controller indicates the controller where an error occurred.**	(1) Data is not properly transmitted due to accidental erroneous operation of the controller of the error source. (2) Error source controller failure	Turn off the power source of the outdoor and the indoor units.(When the power source is turned off separately, the microcomputer will not be reset, and the error will not be corrected.s.) -> If the same error occurs, the error source controller is a failure.

(1) System with one outdoor unit

Error Code	Error definition and error detection method	
6607	No ACK abnormality	The error is detected when no acknowledgement (ACK signal) is received after the transmission. (eg. When the data is transmitted six times in a row with 30 seconds interval, the error is detected on the transmission side.) **Note: The address/attribute appeared on the display on the remote controller indicates the controller which did not provide the response (ACK).**

Error source address	Error display	Detection method	Cause	Check method and remedy
Outdoor unit (OC)	M-NET remote controller (RC) MA remote controller (MA)	No acknowledgement (ACK) at BC transmission to OC	(1) Contact failure of transmission line of OC or BC (2) Decrease of transmission line voltage/signal by exceeding acceptable range of transmission wiring . Farthest : 200 m [656ft] or less Remote controller wiring: 10m [32ft] or less (3) Erroneous sizing of transmission line (Not within the range below). Wire diameter: 1.25mm^2 [AWG16] or more (4) Indoor unit main board failure (5) Power circuit failure of outdoor unit	Turn off the power source of the outdoor unit, and turn it on again. If the error is accidental, it will run normally. If not, check the causes (1) - (5). Refer to 9. [4].7.(2) "Outdoor unit transmission power source circuit failure judgment" for (5).
BC controller (BC)	M-NET remote controller (RC) MA remote controller (MA)	No acknowledgement (ACK) at IC transmission to BC	(1) When BC controller address is changed or modified during operation. (2) Faulty or disconnected transmission wiring of BC controller (3) Disconnected connector of BC controller (CN02) (4) Faulty control board of BC controller	Turn off the outdoor/indoor units for 5 or more minutes, and turn them on again. If the error is accidental, they will run normally. If not, check the causes (1) - (4).
Indoor unit (IC)	M-NET remote controller (RC) MA remote controller (MA)	No acknowledgement (ACK) at RC transmission to IC	(1) When IC unit address is changed or modified during operation. (2) Faulty or disconnected IC transmission wiring (3) Disconnected IC connector (CN2M) (4) Indoor unit board failure (5) M-NET remote controller failure	Turn off the outdoor/indoor units for 5 or more minutes, and turn them on again. If the error is accidental, they will run normally. If not, check the causes (1) - (5).
LOSSNAY (LC)	M-NET remote controller (RC) MA remote controller (MA)	No acknowledgement (ACK) at IC transmission to LC	(1) The power source of LOSSNAY has been shut off. (2) When the address of LOSSNAY is changed in the middle of the operation (3) Faulty or disconnected transmission wiring of LOSSNAY (4) Disconnected connector (CN1) on LOSSNAY (5) Controller failure of LOSSNAY	Turn off the power source of LOSSNAY and turn it on again. If the error is accidental, it will run normally. If not, check the causes (1) - (5).
M-NET remote controller (RC)	M-NET remote controller (RC)	No acknowledgement (ACK) at IC transmission to RC	(1) Faulty transmission wiring at IC unit side. (2) Faulty wiring of the transmission line for M-NET remote controller (3) When the address of M-NET remote controller is changed in the middle of the operation (4) M-NET remote controller failure	Turn off the power source of the outdoor unit for 5 minutes or more, and turn it on again. If the error is accidental, it will run normally. If not, check the causes (1) - (4).

(2) Grouping of units in a system with multiple outdoor units

Error Code	Error definition and error detection method	
6607 (Continued)	No ACK abnormality	The error is detected when no acknowledgement (ACK signal) is received after the transmission. (eg. When the data is transmitted six times in a row with 30 seconds interval, the error is detected on the transmission side.) **Note: The address/attribute appeared on the display on the remote controller indicates the controller which did not provide the response (ACK).**

Error source address	Error display	Detection method	Cause	Check method and remedy
Outdoor unit (OC)	M-NET remote controller (RC) MA remote controller (MA)	No acknowledgement (ACK) at BC transmission to OC	Same cause as that for system with one outdoor unit	Same remedy as that for system with one outdoor unit
BC controller (BC)	M-NET remote controller (RC) MA remote controller (MA)	No acknowledgement (ACK) at IC transmission to BC	Same cause as that for system with one outdoor unit	Same remedy as that for system with one outdoor unit
Indoor unit (IC)	M-NET remote controller (RC)	No acknowledgement (ACK) at RC transmission to IC	(1) Same causes as (1) - (5) for system with one outdoor unit (2) Disconnection or short circuit of the transmission line for the outdoor unit on the terminal block for centralized control line connection (TB7) (3) When multiple outdoor units are connected and the power source of one of the outdoor units has been shut off. (4) The male power supply connector of the outdoor unit is not connected to the female power supply switch connector (CN40). (5) The male power supply connectors on 2 or more outdoor units are connected to the female power supply switch connector (CN40) for centralized control. If an error occurs, after the unit runs normally once, the following causes may be considered. •Total capacity error (7100) •Capacity code error (7101) •Error in the number of connected units (7102) •Address setting error (7105)	1) Turn off the power sources of the outdoor and indoor units for 5 or more minutes, and turn them on again. If the error is accidental, the will run normally.If not, check the cause 2). 2) Check the causes of (1) - (5). If the cause is found, correct it. If no cause is found, check 3). 3) Check the LED displays for troubleshooting on other remote controllers whether an error occurs. If an error is found, -> If an error is found, check the check code definition, and correct the error. If no error is found, -> Indoor unit board failure

(2) Grouping of units in a system with multiple outdoor units

Error Code	Error definition and error detection method	
6607 (Continued)	No ACK abnormality	The error is detected when no acknowledgement (ACK signal) is received after the transmission. (eg. When the data is transmitted six times in a row with 30 seconds interval, the error is detected on the transmission side.) **Note: The address/attribute appeared on the display on the remote controller indicates the controller which did not provide the response (ACK).**

Error source address	Error display	Detection method	Cause	Check method and remedy
LOSSNAY (LC)	M-NET remote controller (RC) MA remote controller (MA)	No acknowledgement (ACK) at IC transmission to FU	(1) Same causes as (1) - (4) for system with one outdoor unit (Interlocked operation between the transmission line and LOSSNAY in the system in which the indoor units connected to different outdoor units are grouped) (2) Disconnection or short circuit of the transmission line for the outdoor unit on the terminal block for centralized control line connection (TB7) (3) When multiple outdoor units are connected and the power source of one of the outdoor units has been shut off. (4) The male power supply connector of the outdoor unit is not connected to the female power supply switch connector (CN40). (5) The male power supply connectors on 2 or more outdoor units are connected to the female power supply switch connector (CN40) for centralized control. If an error occurs, after the unit runs normally once, the following causes may be considered. •Total capacity error (7100) •Capacity code error (7101) •Error in the number of connected units (7102) •Address setting error (7105)	1) Turn off the power source of LOSSNAY for 5 or more minutes, and turn it on again. If the error is accidental, it will run normally.If not, check the cause 2). 2) Check the causes of (1) - (5). If the cause is found, correct it. If no cause is found, check 3). 3) Same cause as that for indoor unit described in 3)
M-NET remote controller (RC)	M-NET remote controller (RC)	No acknowledgement (ACK) at IC transmission to RC	(1) Same causes as (1) - (5) for system with one outdoor unit (2) Disconnection or short circuit of the transmission line for the outdoor unit on the terminal block for centralized control line connection (TB7) (3) When multiple outdoor units are connected and the power source of one of the outdoor units has been shut off. (4) The male power supply connector of the outdoor unit is not connected to the female power supply switch connector (CN40). (5) The male power supply connectors on 2 or more outdoor units are connected to the female power supply switch connector (CN40) for centralized control. If an error occurs, after the unit runs normally once, the following causes may be considered. •Total capacity error (7100) •Capacity code error (7101) •Error in the number of connected units (7102) •Address setting error (7105)	1) Turn off the power source of LOSSNAY for 5 or more minutes, and turn it on again. If the error is accidental, it will run normally.If not, check the cause 2). 2) Check the causes of (1) - (5). If the cause is found, correct it. If no cause is found, check 3). 3) Same cause as that for indoor unit described in 3) If the operation does not return to normal, check the causes (1) through (5).

(3) System connected to the system controllers (MELANS)

Error Code	Error definition and error detection method	
6607 (Continued)	No ACK abnormality	The error is detected when no acknowledgement (ACK signal) is received after the transmission. (eg. When the data is transmitted six times in a row with 30 seconds interval, the error is detected on the transmission side.) **Note: The address/attribute appeared on the display on the remote controller indicates the controller which did not provide the response (ACK).**

Error source address	Error display	Detection method	Cause	Check method and remedy
Outdoor unit (OC)	M-NET remote controller (RC) System controller (SC) MA remote controller (MA)	No acknowledgement (ACK) at BC transmission to OC	Same cause as that for system with one outdoor unit	Same remedy as that for system with one outdoor unit
BC controller (BC)	M-NET remote controller (RC) system controller (SC) MA remote controller (MA)	No acknowledgement (ACK) at IC transmission to BC	Same cause as that for system with one outdoor unit	Same remedy as that for system with one outdoor unit
Indoor unit (IC)	M-NET remote controller (RC)	No acknowledgement (ACK) at RC transmission to IC	Same as grouping of units in a system with multiple outdoor units	Same remedy as that for grouping of units in a system with multiple outdoor units
	system controller (SC)	No acknowledgement (ACK) at SC transmission to IC	1. Error occurrence on some IC (1) Same cause as that for system with one outdoor unit	Same remedy as that for system with one outdoor unit
			2. Error occurrence on all IC in the system with one outdoor unit (1) Total capacity error (7100) (2) Capacity code error (7101) (3) Error in the number of connected units (7102) (4) Address setting error (7105) (5) Disconnection or short circuit of the transmission line for the outdoor unit on the terminal block for centralized control line connection (TB7) (6) Turn off the power source of the outdoor unit (7) Malfunction of electrical system for the outdoor unit	1) Check the LED display for troubleshooting on the outdoor unit. ->If an error is found, check the check code definition, and correct the error. ->If no error is found, check 2). 2) Check (5) - (7) on the left.
			3. Error occurrence on all IC (1) Same causes as (1) - (7) described in 2. (2) The male power supply connectors on 2 or more outdoor units are connected to the female power supply switch connector (CN40) for the transmission line for centralized control. (3) Disconnection or shutdown of the power source of the power supply unit for transmission line (4) System controller (MELANS) malfunction	Check voltage of the transmission line for centralized control. 20V or more : Check (1) and (2) on the left. Less than 20V : Check (3) on the left.

(3) System connected to the system controllers (MELANS)

Error Code	Error definition and error detection method	
6607 (Continued)	No ACK abnormality	The error is detected when no acknowledgement (ACK signal) is received after the transmission. (eg. When the data is transmitted six times in a row with 30 seconds interval, the error is detected on the transmission side.) **Note: The address/attribute appeared on the display on the remote controller indicates the controller which did not provide the response (ACK).**

Error source address	Error display	Detection method	Cause	Check method and remedy
M-NET remote controller failure (RC)	M-NET remote controller (RC) System controller (SC)	No acknowledgement (ACK) at IC transmission to RC	Same as grouping of units in a system with multiple outdoor units	Same remedy as that for grouping of units in a system with multiple outdoor units
	system controller (SC)	No acknowledgement (ACK) at MELANS transmission to RC	1. Error occurrence on some IC (1) Same cause as that for system with one outdoor unit	Same remedy as that for system with one outdoor unit
			2. Error occurrence on all IC in the system with one outdoor unit (1) An error is found by the outdoor unit. Total capacity error (7100) Capacity code error (7101) Error in the number of connected units (7102) Address setting error (7105) (2) Disconnection or short circuit of the transmission line for the outdoor unit on the terminal block for centralized control line connection (TB7) (3) Turn off the power source of the outdoor unit. (4) Malfunction of electrical system for the outdoor unit	1) Check the LED display for troubleshooting on the outdoor unit. ->If an error is found, check the check code definition, and correct the error. ->If no error is found, check 2). 2) Check (2) - (4) on the left.
			3. Error occurrence on all IC (1) Same causes as (1) - (4) described in 2. (2) The male power supply connector on the outdoor unit is connected to the female power supply switch connector (CN40) for the transmission line for centralized control. (3) Disconnection or shutdown of the power source of the power supply unit for transmission line (4) System controller (MELANS) malfunction	Check (1) - (4) on the left.

(3) System connected to the system controllers (MELANS)

Error Code	Error definition and error detection method	
6607 (Continued)	No ACK abnormality	The error is detected when no acknowledgement (ACK signal) is received after the transmission. (eg. When the data is transmitted six times in a row with 30 seconds interval, the error is detected on the transmission side.) **Note: The address/attribute appeared on the display on the remote controller indicates the controller which did not provide the response (ACK).**

Error source address	Error display	Detection method	Cause	Check method and remedy
System controller (SC)	M-NET remote controller (RC) MA remote controller (MA)	No acknowledgement (ACK) at IC transmission to SC	1. Error display on some displays on M-NET remote controllers (1) Faulty wiring of the transmission line for M-NET remote controller (2) Disconnection or contact failure of the transmission connector for M-NET remote controller (3) M-NET remote controller failure	Check (1) - (3) on the left.
			2. Error occurrence on all IC in the system with one outdoor unit (1) An error is found by the outdoor unit. Total capacity error (7100) Capacity code error (7101) Error in the number of connected units (7102) Address setting error (7105) (2) Disconnection or short circuit of the transmission line for the outdoor unit on the terminal block for centralized control line connection (TB7) (3) Turn off the power source of the outdoor unit. (4) Malfunction of electrical system for the outdoor unit	1) Check the LED display for troubleshooting on the outdoor unit. ->If an error is found, check the check code definition, and correct the error. ->If no error is found, check 2). 2) Check (2) - (4) on the left.
			3. Error display on all displays on M-NET remote controllers (1) Same causes as (1) - (4) described in 2. (2) The male power supply connector on the outdoor unit is connected to the female power supply switch connector (CN40) for the transmission line for centralized control. (3) Disconnection or shutdown of the power source of the power supply unit for transmission line (4) System controller (MELANS) malfunction	Check (1) - (4) on the left.

(4) Errors that are not limited to a particular system

Error Code	Error definition and error detection method	
6607 (Continued)	No ACK abnormality	The error is detected when no acknowledgement (ACK signal) is received after the transmission. (eg. When the data is transmitted six times in a row with 30 seconds interval, the error is detected on the transmission side.) **Note: The address/attribute appeared on the display on the remote controller indicates the controller which did not provide the response (ACK).**

Error source address	Error display	Detection method	Cause	Check method and remedy
Address which should not be existed	-	-	(1) Although the address of M-NET remote controller has been changed after the group is set using M-NET remote controller, the indoor unit is keeping the memory of the previous address. The same symptom will appear for the registration with SC. (2) Although the address of LOSSNAY has been changed after the interlock registration of LOSSNAY is made using M-NET remote controller, the indoor unit is keeping the memory of the previous address.	Delete unnecessary information of non-existing address which some indoor units have. Use either of the following two methods for deletion. 1) Address deletion by M-NET remote controller Delete unnecessary address information using the manual setting function of M-NET remote controller. Refer to this service handbook "4. [2]. Group settings and interlock settings via the ME remote controller 1. (3) Address deletion". 2) Deletion of connection information of the outdoor unit by the deleting switch **Note that this switch deletes all the group information set via M-NET remote controller and all the interlock information of LOSSNAY and the indoor unit.** •Turn off the power source of the outdoor unit, and wait for 5 minutes. •Turn on the dip switch (SW2-2) on the outdoor unit main board. •Turn on the power source of the outdoor unit, and wait for 5 minutes. •Turn off the power source of the outdoor unit, and wait for 5 minutes. •Turn off the dip switch (SW2-2) on the outdoor unit main board. •Turn on the power source of the outdoor unit.

Error Code	Error definition and error detection method	Cause	Check method and remedy
6608	No response When no response command is returned although acknowledgement (ACK) is received after transmission, an error is detected.When the data is transmitted 10 times in a row with 3 seconds interval, an error is detected on the transmission side. **Note: The address/attribute appeared on the display on the remote controller indicates the controller where an error occurred.**	(1) The transmission line work of one of the indoor unit, outdoor unit, or the BC controller is performed while the power is on, the transmitted data will collide, and the wave shape will be changed. (2) The transmission is sent and received repeatedly due to noise. (3) The transmission line voltage/signal is decreased due to erroneous sizing of transmission line. Farthest: 200 m [656ft] or less Remote controller wiring:} 10m [32ft] or less (4) The transmission line voltage/signal is decreased due to erroneous sizing of transmission line. Wire diameter: 1.25mm^2 [AGW16] or less	1) When an error occurs at commissioning Turn off the power sources of the outdoor unit, indoor unit, BC controller, and LOSSNAY for 5 or more minutes, and turn them on again. -> When they return to normal operation, the cause of the error is the transmission line work performed with the power on. If an error occurs again, check 2). 2) Check (3) and (4) on the left. -> If the cause is found, correct it. -> If no cause is found, check 3). 3) Check transmission wave shape/noise on trans-mission line by following <Investigation method of transmission wave shape/noise>. **Noise is the most possible cause of the error "6602".**

Error Code	Error definition and error detection method	Cause	Check method and remedy
6831	MA communication error or no reception error Communication between the MA remote controller and the indoor unit is not done properly. No proper data has been received for 3 minutes.	(1) Contact failure of the remote controller lines of MA remote controller or the indoor unit. (2) All the remote controllers are set to SUB. (3) Failure to meet wiring regulations •Wire length •Wire size •Number of remote controllers •Number of indoor units (4) The remote controller is removed after the installation without turning the power source off. (5) Noise interference on the remote controller transmission lines (6) Faulty circuit that is on the indoor board and performs transmission/reception of the signal from the remote controller (7) Problems with the circuit on the remote controller that sends or receives the signals from the remote controller	1) Check for disconnected or loose transmission lines for the indoor units or MA remote controllers. 2) Confirm that the power is supplied to the main power source and the remote controller line. 3) Confirm that MA remote controller's capacity limit is not exceeded. 4) Check the sub/main setting of the MA remote controllers.One of them must be set to MAIN. 5) Diagnose the remote controller (described in the remote controller installation manual). [OK]: no problems with the remote controller (check the wiring regulations) [NO]: Replace the MA remote controller. [6832, 6833, ERC]: due to noise interference <Go to (5)> 6) Check wave shape/noise on MA remote controller line by following <4. Investigation method of transmission wave shape/noise>. 7) When no problems are found with items 1 through 6, replace the indoor unit board or the MA remote controller. The following status can be confirmed on LED1 and 2 on the indoor unit board. •LED1 is lit. The main power source of the indoor unit is turned on. •LED2 is lit. MA remote controller line is being powered.
6834	MA communication error or start bit detection error Communication between the MA remote controller and the indoor unit is not done properly. No proper data has been received for 2 minutes.		
6832	MA communication error or synchronization recovery error Communication between the MA remote controller and the indoor unit is not done properly. Failure to detect opening in the transmission path and unable to send signals Indoor unit : 3 minutes Remote controller : 6 seconds	(1) Contact failure of the remote controller lines of MA remote controller or the indoor unit. (2) 2 or more remote controllers are set to MAIN. (3) Overlapped indoor unit address (4) Noise interference on the remote controller lines (5) Failure to meet wiring regulations •Wire length •Wire size •Number of remote controllers •Number of indoor units (6) Problems with the circuit on the remote controller that sends or receives the signals from the remote controller	
6833	MA communication error or transmission/reception H/W error Communication between the MA remote controller and the indoor unit is not done properly. An error occurs when the transmitted data and the received data differ for 30 times in a row.		

3. System error

<table>
<tr><th>Error Code</th><th>Error source</th><th>Error definition and error detection method</th><th>Cause</th><th>Check method and remedy</th></tr>
<tr><td>7100</td><td>Outdoor unit</td><td>Total capacity error

The model total of indoor units in the system with one outdoor unit exceeds limitations.</td><td>The model total of indoor units in the system with one outdoor unit exceeds the following table.
<table>
<tr><th>Model</th><th>Capacity Total</th></tr>
<tr><td>P72</td><td>108</td></tr>
<tr><td>P96</td><td>144</td></tr>
<tr><td>P108</td><td>162</td></tr>
<tr><td>P126</td><td>189</td></tr>
<tr><td>P144</td><td>216</td></tr>
<tr><td>P168</td><td>252</td></tr>
<tr><td>P192</td><td>288</td></tr>
<tr><td>P204</td><td>306</td></tr>
<tr><td>P216</td><td>324</td></tr>
<tr><td>P234</td><td>351</td></tr>
</table></td><td>1) Check the model total (capacity code total) of indoor units connected.
2) Check the model name (capacity code) of the connected indoor unit set by the switch (SW2 on indoor unit board).

When the model name set by the switch is different from that of the unit connected, turn off the power source of the outdoor and the indoor units, and change the setting of the model name (capacity code).</td></tr>
<tr><td>7101</td><td>Outdoor unit
Indoor unit</td><td>Capacity code error

The model name (capacity code) of the connected indoor unit connected is inappropriate.</td><td>The model name (capacity code) set by the switch (SW2) is wrong.

*The capacity of the indoor unit can be confirmed by the self-diagnosis function (SW1 operation) of the outdoor unit.</td><td>1) Check the model name (capacity code) of the indoor unit which has the error source address set by the switch (SW2 on indoor unit board).
When the model name set by the switch is different from that of the unit connected, turn off the power source of the outdoor and the indoor units, and change the setting of the capacity code.</td></tr>
</table>

<table>
<tr><th>Error Code</th><th>Error source</th><th>Error definition and error detection method</th><th>Cause</th><th>Check method and remedy</th></tr>
<tr><td>7102</td><td>Outdoor unit</td><td>Error in the number of connected units

The number of connected indoor units is "0" or exceeds the allowable value.</td><td>(1) Number of indoor units connected to the outdoor terminal block (TB3) for indoor/outdoor transmission lines exceeds limitations described below.
<table>
<tr><th>Number of units</th><th>Restriction on the number of units</th></tr>
<tr><td rowspan="5">1) Total number of indoor units</td><td>1-15 : P72 model</td></tr>
<tr><td>1-19 : P96 model</td></tr>
<tr><td>1-20 : P108 -P126 models</td></tr>
<tr><td>1-24 : P144 - P204 models</td></tr>
<tr><td>1-32 : P216 -P234 models</td></tr>
<tr><td>2) Number of BC controllers</td><td>1
(P72 - P126 models only)</td></tr>
<tr><td>3) Number of Main BC controllers</td><td>0 or 1</td></tr>
<tr><td>4) Number of Sub BC controllers</td><td>0,1 or 2</td></tr>
<tr><td>5) Total number of LOSSNAY units (During auto address start-up only)</td><td>0 or 1</td></tr>
</table>
(2) The outdoor unit address is set to 51-100 although the address is automatically set up (MA remote controller). ("HO" appears on the display on MA remote controller.)
(3) Disconnected transmission line of the outdoor unit
(4) Short-circuited transmission line
When (3) and (4) apply, the following display will appear.
•In case of M-NET remote controller
-> Nothing appears on the display as no power is supplied to the remote controller.
•In the case of MA remote controller
-> "HO" will blink
(5) Disconnected transmission line on BC controller</td><td>1) Check whether the number of units connected to the outdoor terminal block (TB3) for indoor/outdoor transmission lines does not exceed the limitation. (See (1) to (4) on the left.)
2) Check (2) - (5) on the left.
3) Check whether the transmission line for the terminal block for centralized control (TB7) is not connected to the terminal block for the indoor/outdoor transmission line (TB3).</td></tr>
<tr><td>7105</td><td>Outdoor unit
BC controller</td><td>Address setting error

Erroneous setting of OC unit address
Erroneous setting of BC controller address</td><td>Erroneous setting of OC unit address
The address of outdoor unit is not set to 00 or to 51 - 100.The address of BC controller is not set to 51 - 100.</td><td>Check that the address of the OC unit and the BC controller is set to 51 - 100.
If the outdoor unit address is out of the allowable range, turn off the power of the outdoor unit, and set the address again.
If the BC controller address is out of the allowable range, turn off the power of both the outdoor unit and the BC controller, and set the address again.</td></tr>
</table>

<table>
<tr><th>Error Code</th><th>Error source</th><th>Error definition and error detection method</th><th>Cause</th><th>Check method and remedy</th></tr>
<tr><td>7106</td><td></td><td>Attribute setting error</td><td>MA remote controller intended for use with indoor units, such as an MA remote controller, is connected to the OA processing unit whose attribute is FU.</td><td>To operate the OA processing unit using remote controllers for indoor units, such as MA remote controller, set the DipSW3-1 on the OA processing unit to ON.
<table>
<tr><th>Operation method</th><th>SW 3-1</th></tr>
<tr><td>Interlock with the indoor unit</td><td>OFF</td></tr>
<tr><td>Direct operation with the MA remote controller</td><td>ON</td></tr>
</table></td></tr>
<tr><td>7107</td><td>BC controller</td><td>Port setting error

The port with wrong number is connected to the indoor unit.The model total connected to the port is greater than the specification.</td><td>(1) Model total of indoor units per each port or per each port merge is greater than the specification.
<table>
<tr><th>Total port number</th><th>Model total</th></tr>
<tr><td>Single branching</td><td>54</td></tr>
<tr><td>2 branches merge</td><td>96</td></tr>
</table>
(2) 4 or more indoor units are connected to the same port.
(3) When two ports are used, the port with the smaller number is not connected to the indoor unit.
(4) For the address of the BC controller (Sub 1 or 2), 50 is not added to the smallest indoor unit address, which is connected to the BC controller (Sub1 or 2).
(5) In the system to which multiple BC controllers are connected, the indoor unit address connected to the BC controller is not set as shown below.
(i) The indoor unit address which is connected to the BC controller (main)
(ii) The indoor unit address which is connected to the BC controller (Sub1)
(iii) he indoor unit address which is connected to the BC controller (Sub2)
Address setting
(i)<(ii)<(iii)
*(ii) and (iii) can be reversed.</td><td>Before resetting the port number using the port number setting switch or the model using the model (capacity code) setting switch, turn off the power of the outdoor unit, the BC controller and the indoor unit.</td></tr>
</table>

Error Code	Error source	Check method and remedy
7107	BC controller	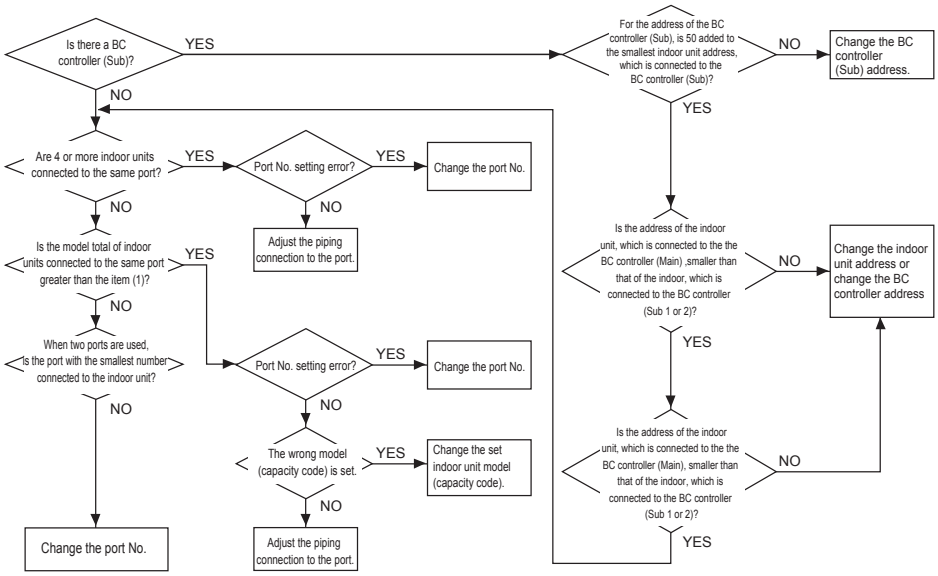

Error Code	Error source	Error definition and error detection method	Cause	Check method and remedy
7110	Outdoor unit	**Unset unit connection information error** The start-up of the unit has not completed normally in the system to which a transmission booster is connected.	When all power sources are turned off after the start-up of the unit has completed normally. When the start-up of the unit has completed without turning on the power source of the transmission booster. When the power source of the transmission booster is turned on afterwards.	1) Check whether the power source of the transmission is turned on. 2) Turn off the power sources of outdoor/indoor units and transmission booster, and turn them on again.
7111	Indoor unit OA processing unit	**Remote controller sensor failure** This error occurs when the temperature data is not sent although the remote controller sensor is specified.	The remote controller without the temperature sensor (the wireless remote controller or the M-NET compact remote controller (mounted type)) is used and the remote controller sensor for the indoor unit is specified. (SW1-1 is ON.)	Replace the remote controller with the one with built-in temperature sensor.
7113	Outdoor unit	**Model setting error (short detection)**	Short-circuit Faulty wiring or contact failure	Check all main board connectors and rectify faulty connection.
7117	Outdoor unit	**Model setting error (open detection)**	Disconnected connector, disconnected wire, or contact failure	Check for the contact of the connector CNTYP1, 4, 5 on the main board.
7130	Outdoor unit	**Incompatible units** The check code will appear when the indoor unit or the BC controller with different refrigerant systems is connected.	The indoor unit that uses only R22 refrigerant is connected. The wrong unit model or the wrong BC controller model is connected. When connecting Mr. SLIM (A control) with M-NET, the connecting adapter for M-NET must be connected to the indoor unit.	Check the model names of the connected indoor unit and the BC controller. Check whether the connecting adapter for M-NET is not connected to the indoor unit. (Connect the connecting adapter for M-NET to the outdoor unit.)

4. Troubleshooting according to the remote controller malfunction or the external input error

(1) In the case of MA remote controller

	Phenomena	Cause	Check method and remedy
1	Even if the operation button on the remote controller is pressed, the display remains unlit and the unit does not start running.(Power indicator ◎ does not appear on the screen.)	1. The power is not supplied to the indoor unit. (i) The main power of the indoor unit is not on. (ii) The connector on the indoor unit board has come off. (iii) The fuse on the indoor unit board has melted. (iv) Transformer failure and disconnected wire of the indoor unit. 2. Incorrect wiring for the MA remote controller (i) Disconnected wire for the MA remote controller or disconnected line to the terminal block. (ii) Short-circuited MA remote controller wiring (iii) Incorrect wiring for the MA remote controller to the terminal block for transmission line connection (TB5) on the indoor unit (iv) Reversed connection of the wire for the MA remote controller and the AC208 / 230V power wire (v) Reversed connection of the wire for the MA remote controller and the M-NET transmission line on the indoor unit 3. The number of the MA remote controllers that are connected to an indoor unit exceeds the allowable range (2 units). 4. The length or the diameter of the wire for the MA remote controller are out of specification. 5. Short circuit of the wire for the remote display output of the outdoor unit or reversed polarity connection of the relay. 6. The indoor unit board failure 7. MA remote controller failure	(1) Measure voltages of the MA remote controller terminal (among (i) to (iii)). •If the voltage is between DC 8.5 and 12V, the remote controller is a failure. •If no voltage is applied Check (1) described on the left. If the cause is found, correct it. If no cause is found, refer to 2). (2) Remove the wire for the remote controller from the terminal block (TB13) on the MA remote controller for the indoor unit, and check voltage among (i) to (iii). •If the voltage is between DC 8.5 and 12V Check the (2). (iv) described on the left. •If no voltage is applied Check 1. described on the left. If the cause is found, correct it. If no cause is found, check the wire for the remote display output (the relay polarity). If no further cause is found, replace the indoor unit board.

	Phenomena	Cause	Check method and remedy
2	When the remote controller operation SW is turned on, the operation status briefly appears on the display, then it goes off, and the display lights out immediately, and the unit stops.	1. The power for the M-NET transmission line is not supplied from the outdoor unit. 2. Short circuit of the transmission line. 3. Incorrect wiring of the M-NET transmission line on the outdoor unit. ・Disconnected wire for the MA remote controller or disconnected line to the terminal block. ・The indoor transmission line is connected incorrectly to the transmission terminal block for centralized controller (TB7). ・The male power supply connectors on the multiple outdoor units are connected to the female power supply switch connector (CN40). In the system to which the power supply unit for transmission lines is connected, the male power supply connector is connected to the female power supply switch connector (CN40) on the outdoor unit. 4. Disconnected M-NET transmission line on the indoor unit side. 5. Disconnected wire between the terminal block for M-NET line (TB5) of the indoor unit and the indoor unit board (CN2M) or disconnected connector.	**When 2. and 3. apply, check code 7102 will be displayed on the self-diagnosis LED.**

Check method and remedy

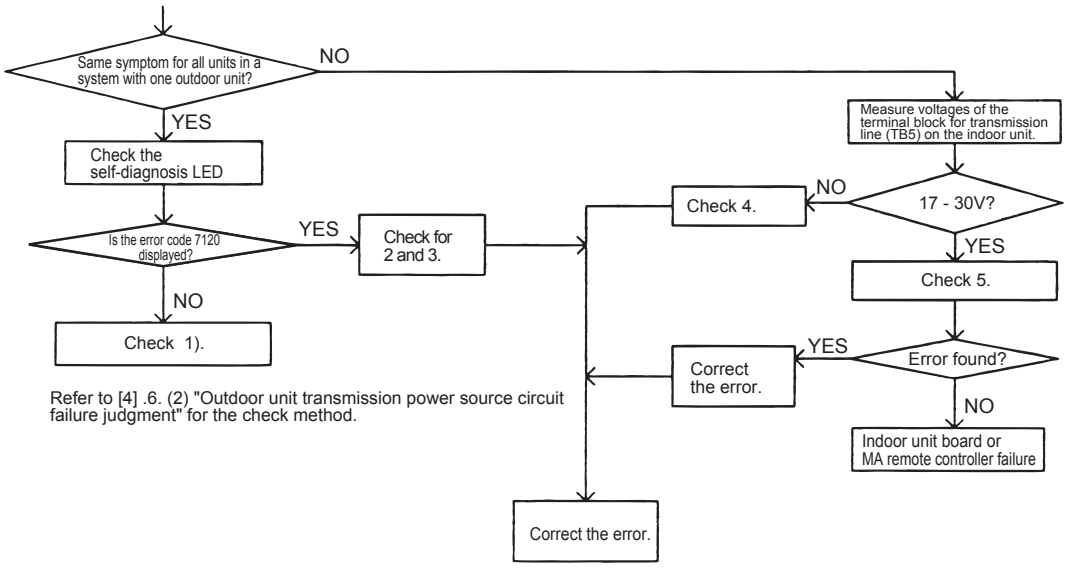

	Phenomena	Cause
3	"HO" or "PLEASE WAIT" display on the remote controller does not disappear, and no operation is performed even if the button is pressed. ("HO" or "PLEASE WAIT" display will normally turn off 5 minutes later after the power on.)	1. The power for the M-NET transmission line is not supplied from the outdoor unit. 2. Short-circuited transmission line 3. Incorrect wiring of the M-NET transmission line on the outdoor unit. • Disconnected wire for the MA remote controller or disconnected line to the terminal block. • The indoor transmission line is connected incorrectly to the transmission terminal block for centralized controller (TB7). • The male power supply connectors on the multiple outdoor units are connected to the female power supply switch connector (CN40). In the system to which the power supply unit for transmission lines is connected, the male power supply connector is connected to the female power supply switch connector (CN40) on the outdoor unit 4. Disconnected M-NET transmission line on the indoor unit. 5. Disconnected wire between the terminal block for M-NET line (TB5) of the indoor unit and the indoor unit board (CN2M) or disconnected connector. 6. Incorrect wiring for the MA remote controller • Short-circuited wire for the MA remote controller • Disconnected wire for the MA remote controller (No.2) and disconnected line to the terminal block. • Reversed daisy-chain connection between groups • Incorrect wiring for the MA remote controller to the terminal block for transmission line connection (TB5) on the indoor unit • The M-NET transmission line is connected incorrectly to the terminal block (TB13) for the MA remote controller. 7. The sub/main setting of the MA remote controller is set to sub. 8. 2 or more main MA remote controllers are connected. 9. Indoor unit board failure (MA remote controller communication circuit) 10. Remote controller failure
		When 2. and 3. apply, check code 7102 will be displayed on the self-diagnosis LED.

Check method and remedy

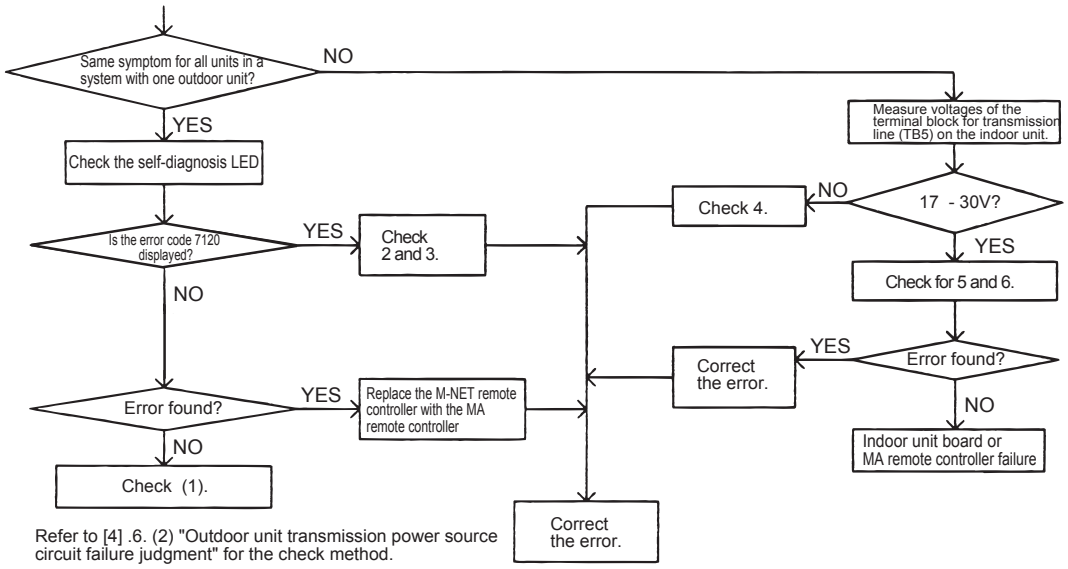

Flow chart

Even if the operation button on the remote controller is pressed, the indoor and the outdoor units do not start running.

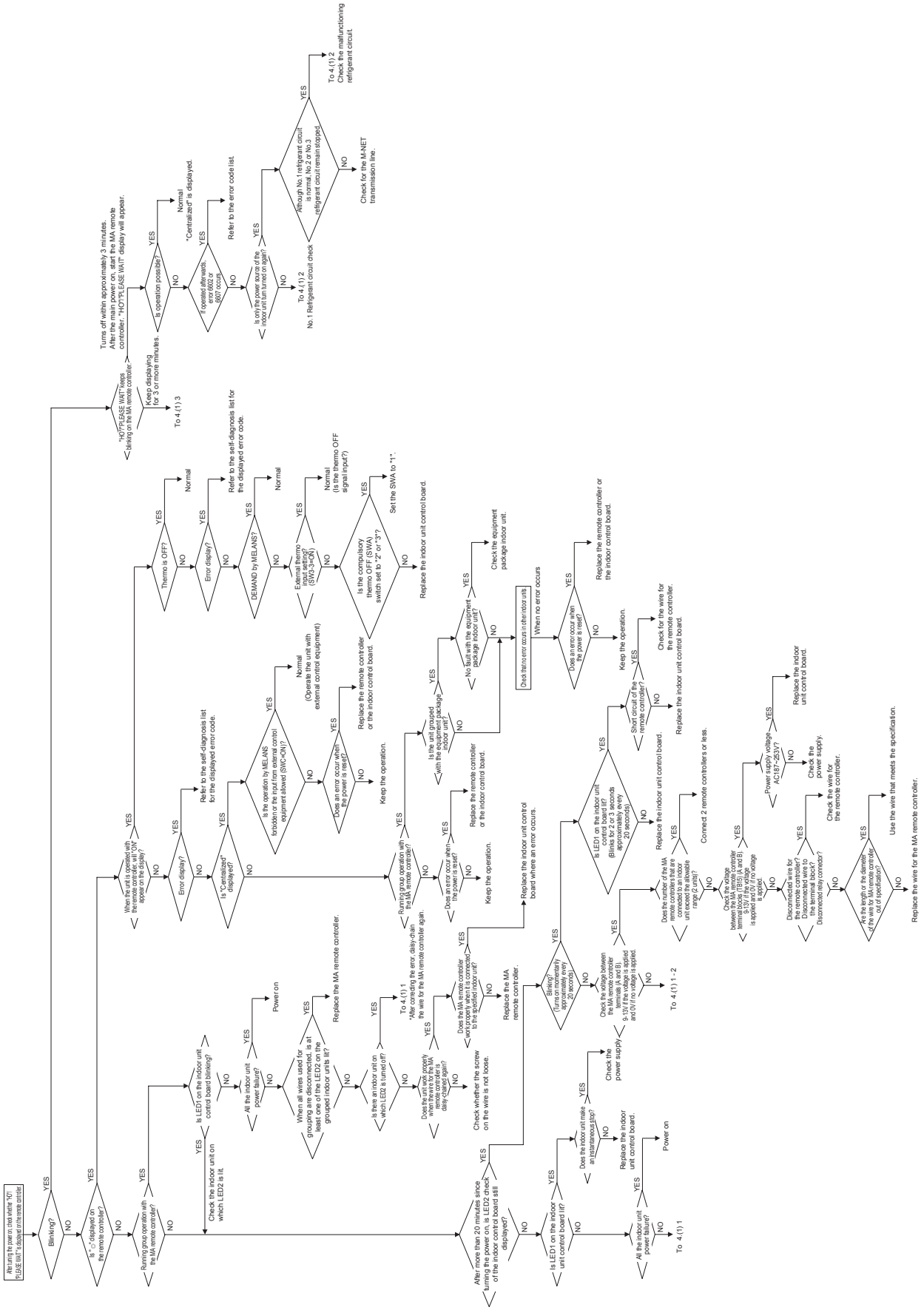

(2) In case of M-NET remote controller

	Phenomena	Cause	Check method and remedy
1	Even if the operation button on the remote controller is pressed, the display remains unlit and the unit does not start running. (Power indicator ◎ does not appear on the screen.)	1. The power for the M-NET transmission line is not supplied from the outdoor unit. 2. Short circuit of the transmission line. 3. Incorrect wiring of the M-NET transmission line on the outdoor unit. ♦Disconnected wire for the MA remote controller or disconnected line to the terminal block. ♦The indoor transmission line is connected incorrectly to the transmission terminal block for centralized controller (TB7). 4. Disconnected transmission line on the remote controller. 5. Remote controller failure	Check voltage of the transmission terminal block for of the M-NET remote controller. (1) If voltage between is 17V and 30V -> M-NET remote controller failure (2) When voltage is 17V or less -> Refer to 9. [4].7.(2) "Outdoor unit transmission power source circuit failure judgment". **When 2. and 3. apply, check code 7102 will be displayed on the self-diagnosis LED.**

	Phenomena	Cause	Check method and remedy
2	When the remote controller operation SW is turned on, a temporary operation display is indicated, and the display lights out immediately.	1. The power is not supplied to the indoor unit. •The main power of the indoor unit (AC208/230V) is not on. •The connector on the indoor unit board has come off. •The fuse on the indoor unit board has melted. •Transformer failure and disconnected wire of the indoor unit •The indoor unit board failure	
		2. The outdoor MAIN board failure As the indoor unit does not interact with the outdoor unit, the outdoor unit model cannot be recognized.	

Check method and remedy

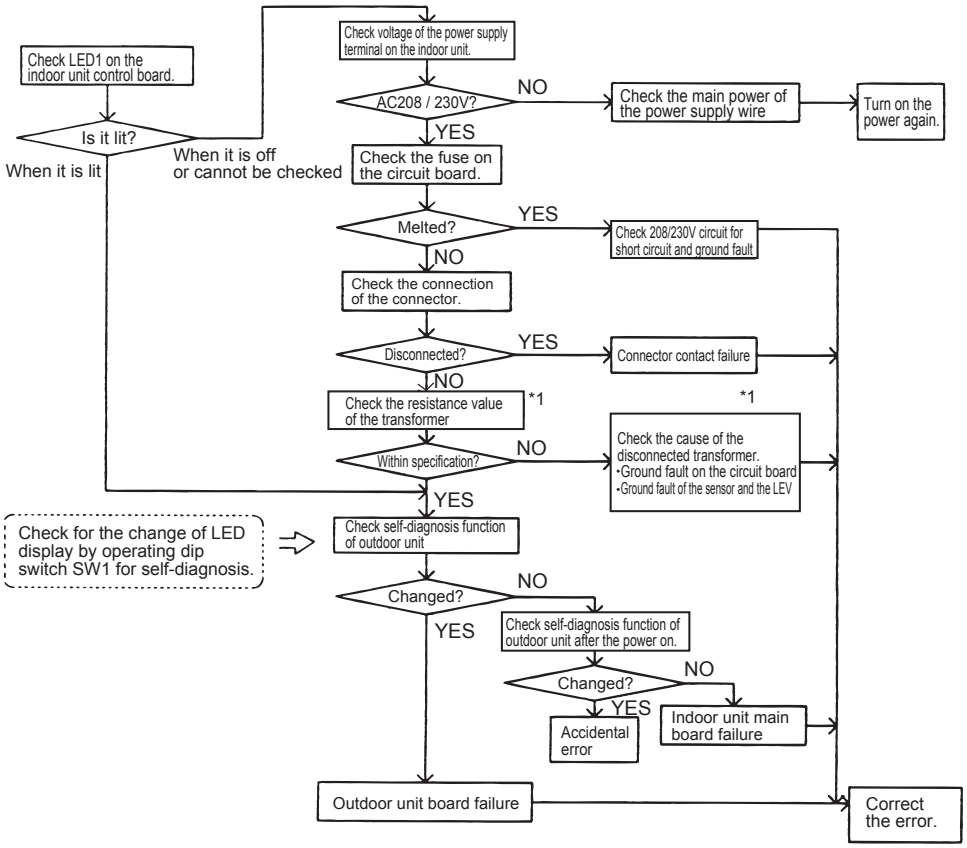

*1. Refer to the service handbook for the indoor unit "Simple checking Procedures for individual components".

	Phenomena	Cause
3	"HO" display on the remote controller does not disappear, and no operation is performed even if the button is pressed.	**Without using MELANS** 1. Outdoor unit address is set to "00" 2. A wrong address is set. ♦A wrong address is set to the indoor unit to be coupled with the remote controller. 100 must be subtracted from the address of the M-NET remote controller. ♦A wrong address is set to the M-NET remote controller (100 must be added to the address of the indoor unit.) 3. Faulty wiring of the terminal block for transmission line (TB5) of the indoor unit in the same group with the remote controller. 4. The centralized control switch (SW2-1) on the outdoor unit is set to ON. 5. Disconnection or faulty wiring of indoor unit transmission line. 6. Disconnection between the terminal block for M-NET line connection (TB5) of the indoor unit and the male connector (CN2M) 7. The male power supply connectors on 2 or more outdoor units are connected to the female power supply switch connector (CN40) for the transmission line for centralized control. 8. Outdoor unit main board failure 9. Indoor unit board failure 10.Remote controller failure
		Interlocking control with MELANS 11.No group registration is made using MELANS. (The indoor unit and the M-NET remote controller are not grouped.) 12.Disconnected transmission line for centralized control (TB7) of the outdoor unit 13.In the system to which the power supply unit for transmission lines is connected, the male power supply connector is connected to the female power supply switch connector (CN40) on the outdoor unit

Check method and remedy

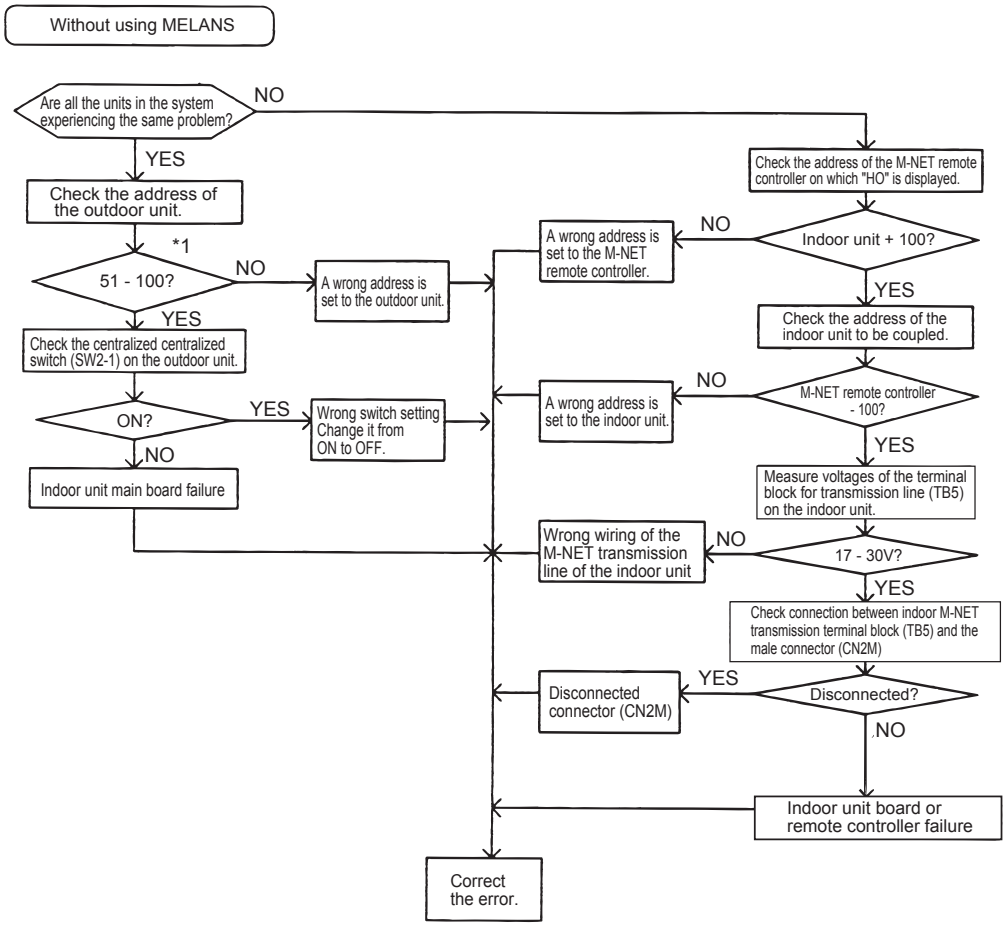

*1. When the indoor unit address is set to 1 - 50, the address will be forcibly set to 100.

Using MELANS

When MELANS is used, "HO" display on the remote controller will disappear when the indoor unit and the local remote controller (M-NET remote controller) are grouped.
If "HO" does not disappear after the registration, check the 11. - 13.

	Phenomena	Cause	
4	"88" appears on the remote controller when the address is registered or confirmed.	**An error occurs when the address is registered or confirmed. (common)** 1. A wrong address is set to the unit to be coupled. 2. The transmission line of the unit to be coupled is disconnected or is not connected. 3. Circuit board failure of the unit to be coupled 4. Improper transmission line work	(1) Confirm the address of unit to be coupled. (2) Check the connection of transmission line. (3) Check voltage of the terminal block for transmission line of the unit to be coupled. (i) Normal if voltage is between DC17 and 30V. (ii) Check (4) in case other than i).
		Generates at interlocking registration between LOSSNAY and the indoor unit 5. The power of LOSSNAY is OFF.	(4) Check for the main power of LOSSNAY.
		Generates at confirmation of controllers used in the system in which the indoor units connected to different outdoor units are grouped 6. The power of the outdoor unit to be confirmed has been cut off. 7. The transmission line for centralized control (TB7) is disconnected. 8. When the indoor units connected to different outdoor units are grouped without MELANS, the male power supply connector is not connected to the female power supply switch connector (CN40) for the transmission line for centralized control. 9. The male power supply connectors on 2 or more outdoor units are connected to the female power supply switch connector (CN40) for the transmission line for centralized control. 10. In the system to which MELANS is connected, the male power supply connector is connected to the female power supply switch connector (CN40) for the transmission line for centralized control. 11. Short circuit of the transmission line for centralized control	(5) Check the power supply of the outdoor unit which is coupled with the unit to be confirmed. (6) Check that the transmission line for centralized control (TB7) of the outdoor unit is not disconnected. (7) Check voltage of the transmission line for centralized control. (i) Normal when voltage is between 10V and 30V (ii) Check 8 - 11 described on the left in case other than i).

(3) Both for MA remote controller and M-NET remote controller

	Phenomena	Cause	Check method and remedy
1	Although cooling operation starts with the normal remote controller display, the capacity is not enough	1. Compressor frequency does not rise sufficiently. ♦Faulty detection of pressure sensor. ♦Protection works and compressor frequency does not rise due to high discharge temperature ♦Protection works and compressor frequency does not rise due to high pressure ♦Pressure drops excessively.	(1) Check pressure difference between the detected pressure by the pressure sensor and the actual pressure with self-diagnosis LED. -> If the accurate pressure is not detected, check the pressure sensor. (Refer to the page on Troubleshooting of Pressure Sensor). Note: Lower inlet pressure by the low pressure sensor than the actual pressure causes insufficient capacity. SW1 setting High pressure sensor Low pressure sensor 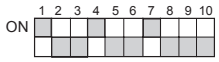 (2) Check temperature difference between the evaporating temperature (Te) and the target evaporating temperature (Tem) with self-diagnosis LED. Note: Higher Te than Tem causes insufficient capacity. SW1 setting Evaporating temperature Te 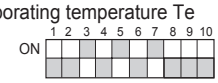 Target evaporating temperature Tem Note: Protection works and compressor frequency does not rise even at higher Te than Tem due to high discharge temperature and high pressure. At high discharge temperature: Refer to 1102. At high pressure: Refer to 1302.
		2. Indoor unit LEV malfunction ♦Insufficient refrigerant flows due to LEV malfunction (not enough opening) or protection works and compressor frequency does not rise due to pressure drop. ♦Refrigerant leak from LEV on the stopping unit causes refrigerant shortage on the running unit.	Refer to the page of LEV troubleshooting (9. [4] -6-).
		3. RPM error of the outdoor unit FAN ♦Motor failure or board failure, or airflow rate decrease due to clogging of the heat exchanger ♦The fan is not properly controlled as the outdoor temperature cannot be precisely detected by the temperature sensor. ♦The fan is not properly controlled as the pressure cannot be precisely detected by the pressure sensor.	Refer to the page on troubleshooting of the outdoor unit fan. Refer to 5106. Refer to 1302.

	Phenomena	Cause	Check method and remedy
1	Although cooling operation starts with the normal remote controller display, the capacity is not enough.	4. Long piping length The cooling capacity varies greatly depending on the pressure loss. (When the pressure loss is large, the cooling capacity drops.)	Confirm that the characteristic of capacity drop due to piping length. The piping pressure loss can be assumed by temperature difference between the heat exchanger inlet temperature (TH22) and TH2 (Te). -> Change the pipe.
		5. Piping size is not proper (thin)	
		6. Insufficient refrigerant amount Protection works and compressor frequency does not rise due to high discharge temperature.	Refer to 1-1. (Compressor frequency does not rise sufficiently.)Refer to the page on refrigerant amount adjustment
		7. Clogging by foreign object	Check the temperature difference between in front of and behind the place where the foreign object is clogging the pipe (upstream side and downstream side). When the temperature drops significantly, the foreign object may clog the pipe. -> Remove the foreign object inside the pipe.
		8. The indoor unit inlet temperature is excessively. (Less than 15°C [59°F] WB	Check the inlet air temperature and for short cycling. Change the environment where the indoor unit is used.
		9. Compressor failure The amount of circulating refrigerant decreases due to refrigerant leak in the compressor.	Check the discharge temperature to determine if the refrigerant leaks, as it rises if there is a leak.
		10.LEV1 malfunction Sufficient liquid refrigerant is not be supplied to the indoor unit as sufficient sub cool cannot be secured due to LEV1 malfunction.	Refer to the page of LEV troubleshooting (9. [4] -6-). It most likely happens when there is little difference or no difference between TH5 and TH7.
		11.TH5, TH7 and HPS sensor failure or faulty wiring LEV1 is not controlled normally.	♦Check the thermistor. ♦Check wiring.

	Phenomena	Cause	Check method and remedy
2	Although heating operation starts with the normal remote controller display, the capacity is not enough.	1. Compressor frequency does not rise sufficiently. ♦Faulty detection of pressure sensor. ♦Protection works and compressor frequency does not rise due to high discharge temperature ♦Protection works and compressor frequency does not rise due to high pressure.	(1) Check pressure difference between the detected pressure by the pressure sensor and the actual pressure with self-diagnosis LED. -> If the accurate pressure is not detected, check the pressure sensor.(Refer to the page on Troubleshooting of Pressure Sensor) Note: Higher inlet pressure by the high pressure sensor than the actual pressure causes insufficient capacity. SW1 setting High pressure sensor Low pressure sensor 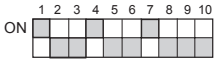 (2) Check the difference between the condensing temperature (Tc) and the target condensing temperature (Tcm) with self-diagnosis LED. Note: Higher Te than Tem causes insufficient capacity. SW1 setting Condensing temperature Tc 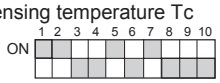 Target condensing temperature Tcm 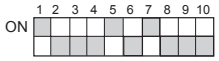 Protection works and compressor frequency does not rise even at lower Tc than Tcm due to high discharge temperature and high pressure. At high discharge temperature: Refer to 1102 At high pressure: Refer to 1302
		2. Indoor unit LEV malfunction Insufficient refrigerant flows due to LEV malfunction (not enough opening).	Refer to the page of LEV troubleshooting (9. [4]. -6-).
		3. When the higher temperature than the actual temperature is detected due to malfunction of the piping sensor (TH22) on the indoor unit, the smaller sub cool is detected, and LEV opening will be smaller.	Check the thermistor (TH22).
		4. RPM error of the outdoor unit FAN ♦Motor failure or board failure, or airflow rate decrease, pressure drop due to clogging of the heat exchanger leading to high discharge temperature ♦The fan is not properly controlled as the temperature cannot be precisely detected with the piping sensor.	Refer to the page on outdoor unit fan ([4] -4-).

	Phenomena	Cause	Check method and remedy
2	Although heating operation starts with the normal remote controller display, the capacity is not enough.	5. Insulation failure of the refrigerant piping	
		6. Long piping length Excessively long piping on the high pressure side causes pressure loss leading to increase in the high pressure.	Confirm that the characteristic of capacity drop due to piping length. -> Change the pipe
		7. Piping size is not proper (thin)	
		8. Clogging by foreign object	Check the temperature difference between in front of and behind the place where the foreign object is clogging the pipe (upstream side and downstream side). Difficult to confirm if the object is clogged inside the extended piping. Run the unit in cooling mode, and find the foreign object using the same method as that for cooling operation. -> Remove the foreign object.
		9. The indoor unit inlet temperature is excessively high.(exceeding 28°C [82°F])	Check the inlet air temperature and for short cycling. Change the environment where the indoor unit is used.
		10. Insufficient refrigerant amount Protection works and compressor frequency does not rise due to low discharge temperature Refrigerant recovery operation is likely to start.	Refer to 2 - 1. (Compressor frequency does not rise sufficiently.) Refer to the page on refrigerant amount adjustment
		11. Compressor failure (same as in case of cooling)	Check the discharge temperature.
3	Outdoor unit stops at times during operation.	The first stop is not considered as an error, as the unit turns to anti-restart mode for 3 minutes as a preliminary error. **Error mode** (i) Abnormal high pressure (ii) Abnormal discharge air temperature (iii) Heatsink thermistor failure (iv) Thermistor failure (v) Pressure sensor failure (vi) Over-current break (vii) Refrigerant overcharge Note: Frost prevention tripping only under cooling mode may be considered in addition to the above. (Freeze protection is detected by one or all indoor units.) Note: Even the second stop is not considered as an error when some specified errors occur. (eg. The third stop is considered as an error when the thermistor error occurs.)	(1) Check the mode operated in the past by displaying preliminary error history on LED display with SW1. (2) Reoperate the unit to find the mode that stops the unit by displaying preliminary error history on LED display with SW1. Refer to the reference page for each error mode. *Display the indoor piping temperature table with SW1 to check whether the freeze proof operation runs properly, and check the temperature.

[3] Investigation of Transmission Wave Shape/Noise

1. M-NET transmission

Control is performed by exchanging signals between the outdoor unit and the indoor unit (M-NET remote controller) through M-NET transmission. Noise interference on the transmission line will interrupt the normal transmission, leading to erroneous operation.

(1) Symptoms caused by noise interference on the transmission line

Cause	Erroneous operation	Error code	Error code definition
Noise interference on the transmission line	Signal is transformed and will be misjudged as the signal of another address.	6600	Address overlaps
	Transmission wave pattern is transformed due to the noise creating a new signal	6602	Transmission processor hardware error
	Transmission wave pattern is transformed due to the noise, and will not be received normally leading to no acknowledgement (ACK).	6607	No ACK
	Transmission cannot be performed due to the fine noise.	6603	Transmission circuit bus-busy
	Transmission is successful; however, the acknowledgement (ACK) or the response cannot be received normally due to the noise.	6607 6608	No ACK No response

(2) Wave shape check

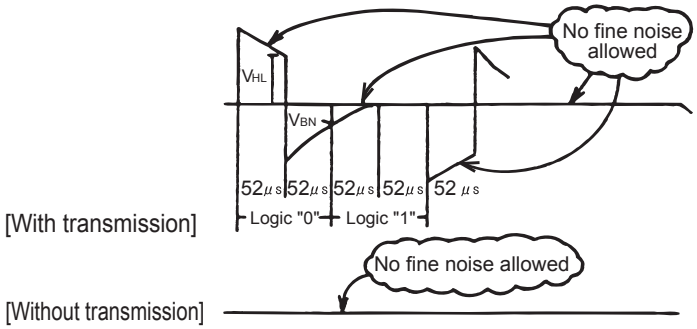

Check the wave pattern of the transmission line with an oscilloscope. The following conditions must be met.

1) Small wave pattern (noise) must not exist on the transmission signal. Minute noise (approximately 1V) can be generated by DC-DC converter or the inverter operation; however, such noise is not a problem when the shield of the transmission line is grounded.
2) The sectional voltage level of transmission signal should be as follows.

Logic	Voltage level of the transmission line
0	V_{HL} = 2.0V or higher
1	V_{BN} = 1.3V or below

(3) Check method and remedy

1) Measures against noise

Check the followings when noise exists on the wave or the errors described in (1) occur.

	Error code definition	Remedy
Check that the wiring work is performed according to wiring specifications.	1. The transmission line and the power 208 / 230 V line are not wired too closely.	Isolate the transmission line from the power line (5cm [1-31/32"] or more). Do not insert them in the same Do not insert them in the same conduit.
	2. The transmission line is not bundled with that for another systems.	The transmission line must be isolated from another transmission line. When they are bundled, erroneous operation may be caused.
	3. The specified wire is used for the transmission line.	Use the specified transmission line. Type: Shielded wire CVVS/CPEVS/MVVS (For M-NET remote controller) Diameter: 1.25mm^2 [AGW16] or more (Remote controller wire: 0.3 - 1.25mm^2 [AGW22-16])
	4. When the transmission line is daisy-chained on the indoor unit terminals, are the shields daisy-chained on the terminals, too?	The transmission is two-wire daisy-chained. The shielded wire must be also daisy-chained. When the shielded cable is not daisy-chained, the noise cannot be reduced enough.
Check that the grounding work is performed according to grounding specifications.	5. Is the grounding of the shield of the transmission line (for indoor unit control) provided on the indoor unit?	One point grounding must be provided on the outdoor unit. If no grounding is provided, the noise on the transmission line cannot escape leading to change of the transmission signal.
	6. Check the treatment method of the shield of the transmission line (for centralized control).	When group operation of indoor units connected to different outdoor units is performed, provide grounding of the shield of the transmission line for centralized control at the point of outdoor unit, and when the system controller is used, provide grounding at the point of the system controller, so that the effect of noise can be minimized. The environment against noise varies depending on the distance of the transmission lines, the number of the connected units, the type of the controllers to be connected, or the environment of the installation site. Therefore, the transmission line work for centralized control must be performed as follows. (1) When no grounding is provided ・Group operation of indoor units connected to different outdoor units: One point grounding on one outdoor unit (power supply unit) ・Use of MELANS: Grounding on the main controller (power supply device) (2) When an error occurs even though one point grounding is provided: Ground the shield on all outdoor units.

2) Check the followings when the error "6607" occurs, or "HO" / "PLEASE WAIT"appears on the display on the remote controller.

Error code definition	Remedy
7. The farthest distance of transmission line is 200m [656ft] or longer.	Check that the farthest distance from the outdoor unit to the indoor unit and to the remote controller is within 200m [656ft].
8. The types of transmission lines are different.	Use the specified transmission line. Type: Shielded wire CVVS/CPEVS/MVVS (For M-NET remote controller) Diameter: 1.25mm^2 [AWG16] or more (Remote controller wire: 0.3-1.25mm^2 [AGW22-16])
9. Check the state of the choke coil on the transmission power supply circuit.	When resistance of the choke coil (L2) is between 0.5 and 2.6 ohm, the choke coil is normal. When resistance (R3) on the outdoor unit MAIN board is 1kohm ± 5%, it is normal. Connectors CNS1 and CNS2 must be removed when resistance is measured.
10. Indoor unit or remote controller failure	Replace the indoor unit controller board or the remote controller.

2. MA remote controller transmission

The communication between the MA remote controller and the indoor unit is performed with current tone burst.

(1) Symptoms caused by noise interference on the transmission line
If noise is generated on the transmission line, and the communication between the MA remote controller and the indoor unit is interrupted for 3 minutes in a row, MA transmission error (6831) will occur.

(2) Confirmation of transmission specifications and wave pattern

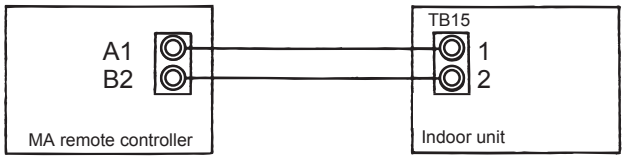

A1, B2 : No polarity
Across terminal No. 1-2
: Power supply (8.5V to 12VDC)

Transmission waveform (Across terminal No.1 - 2)

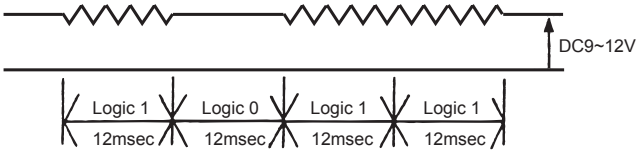

①Satisfies the formula
12 msec/bit ± 5%
②Voltage among terminals must be between DC9 and 12 V.

[4] Troubleshooting Principal Parts

-1- High-Pressure Sensor (63HS)

1. Compare the pressure that is detected by the high pressure sensor, and the high-pressure gauge pressure to check for failure.

Set the digital display switch (SW1) as shown below to display the pressure that is detected by the high pressure sensor on the light emitting diode

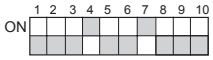

(1) While the sensor is stopped, compare the gauge pressure and the pressure displayed on self-diagnosis LED1.
  1) When the gauge pressure is between 0 and 0.098MPa [14psi], internal pressure is caused due to gas leak.
  2) When the pressure displayed on self-diagnosis LED1 is between 0 and 0.098MPa [14psi], the connector may be defective or be disconnected. Check the connector and go to (4).
  3) When the pressure displayed on self-diagnosis LED1 exceeds 4.15MPa [601psi], go to (3).
  4) If other than 1), 2) or 3), compare the pressures while the sensor is running. Go to (2).

(2) Compare the gauge pressure and the pressure displayed on self-diagnosis LED1 while the sensor is running. (Compare them by MPa [psi] unit.)
  1) When the difference between both pressures is within 0.098MPa [14psi], both the high pressure sensor and the main board are normal.
  2) When the difference between both pressures exceeds 0.098MPa [14psi], the high pressure sensor has a problem. (performance deterioration)
  3) When the pressure displayed on self-diagnosis LED1 does not change, the high pressure sensor has a problem.

(3) Remove the high pressure sensor from the main board to check the pressure on the self-diagnosis LED1.
  1) When the pressure displayed on self-diagnosis LED1 is between 0 and 0.098MPa [14psi], the high pressure sensor has a problem.
  2) When the pressure displayed on self-diagnosis LED1 is approximately 4.15MPa [601psi], the main board has a problem.

(4) Remove the high pressure sensor from the main board, and short-circuit between the No.2 and 3 connectors (63HS) to check the pressure with self-diagnosis LED1.
  1) When the pressure displayed on the self-diagnosis LED exceeds 4.15MPa [601psi], the low pressure sensor has a problem.
  2) If other than 1), the main board has a problem.

2. Pressure sensor configuration

The high pressure sensor consists of the circuit shown in the figure below. If DC 5V is applied between the red and the black wires, voltage corresponding to the pressure between the white and the black wires will be output, and the value of this voltage will be converted by the microcomputer. The output voltage is 0.071V per 0.098MPa [14psi].

∗The pressure sensor on the body side is designed to connect to the connector. The connector pin number on the body side is different from that on the main board side.

	Body side	Main board side
Vcc	Pin 1	Pin 3
Vout	Pin 2	Pin 2
GND	Pin 3	Pin 1

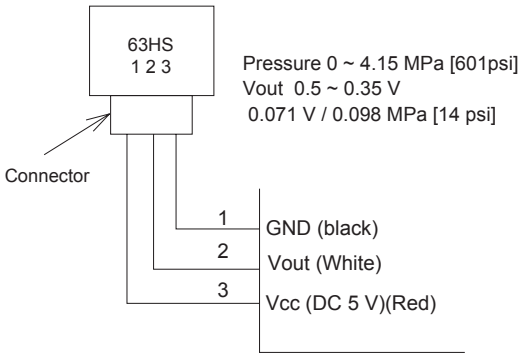

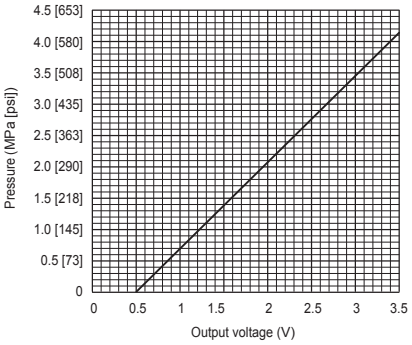

-2- Low-Pressure Sensor (63LS)

1. Compare the pressure that is detected by the low pressure sensor, and the low pressure gauge pressure to check for failure.

Set the digital display switch (SW1) as shown below to display the pressure that is detected by the low pressure sensor on the self-diagnosis LED.

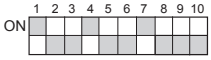

(1) While the sensor is stopped, compare the gauge pressure and the pressure displayed on self-diagnosis LED1.
  1) When the gauge pressure is between 0 and 0.098MPa [14psi], internal pressure is caused due to gas leak.
  2) When the pressure displayed on self-diagnosis LED1 is between 0 and 0.098MPa [14psi], the connector may be defective or be disconnected. Check the connector and go to (4).
  3) When the pressure displayed on self-diagnosis LED1 exceeds 4.15MPa [14psi], go to (3).
  4) If other than 1), 2) or 3), compare the pressures while the sensor is running. Go to (2).

(2) Compare the gauge pressure and the pressure displayed on self-diagnosis LED1 while the sensor is running.(Compare them by MPa [psi] unit.)
  1) When the difference between both pressures is within 0.03MPa [4psi], both the low pressure sensor and the main board are normal.
  2) When the difference between both pressures exceeds 0.03MPa [4psi], the low pressure sensor has a problem. (performance deterioration)
  3) When the pressure displayed on the self-diagnosis LED does not change, the low pressure sensor has a problem.

(3) Remove the low pressure sensor from the main board to check the pressure with the self-diagnosis LED display.
  1) When the pressure displayed on the self-diagnosis LED is between 0 and 0.098MPa [14psi], the low pressure sensor has a problem.
  2) When the pressure displayed on self-diagnosis LED is approximately 1.7MPa [247psi], the main board has a problem.
     - When the outdoor temperature is 30°C [86°F] or less, the main board has a problem.
     - When the outdoor temperature exceeds 30°C [86°F], go to (5).

(4) Remove the low pressure sensor from the main board, and short-circuit between the No.2 and 3 connectors (63HS) to check the pressure with the self-diagnosis LED.
  1) When the pressure displayed on the self-diagnosis LED exceeds 1.7MPa [247psi], the low pressure sensor has a problem.
  2) If other than 1), the main board has a problem.

(5) Remove the high pressure sensor (63HS) from the main board, and insert it into the connector for the low pressure sensor (63LS) to check the pressure with the self-diagnosis LED.
  1) When the pressure displayed on the self-diagnosis LED exceeds 1.7MPa [247psi], the main board has a problem.
  2) If other than 1), the main board has a problem.

2. Low-pressure pressure configuration

The low pressure sensor consists of the circuit shown in the figure below. If DC5V is applied between the red and the black wires, voltage corresponding to the pressure between the white and the black wires will be output, and the value of this voltage will be converted by the microcomputer. The output voltage is 0.173V per 0.098MPa [14psi].

*The pressure sensor on the body side is designed to connect to the connector. The connector pin number on the body side is different from that on the main board side.

	Body side	Main board side
Vcc	Pin 1	Pin 3
Vout	Pin 2	Pin 2
GND	Pin 3	Pin 1

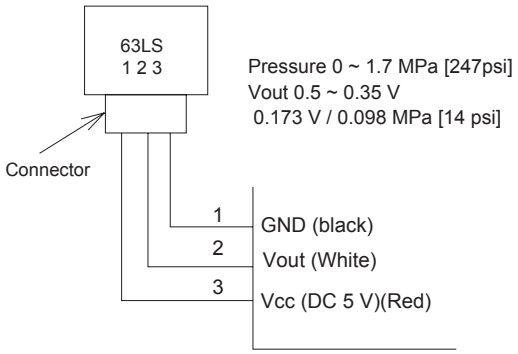

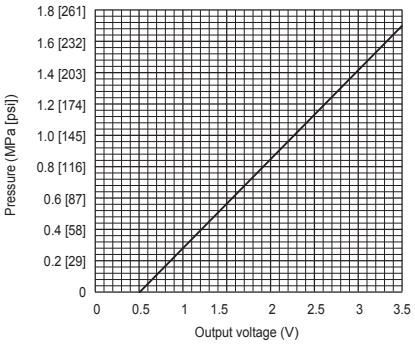

-3- Solenoid Valve

Check whether the output signal from the control board and the operation of the solenoid valve match.
Setting the self-diagnosis switch (SW1) as shown in the figure below causes the ON signal of each relay to be output to the LED's.
Each LED shows whether the relays for the following parts are ON or OFF.
∗The circuits on some parts are closed when the relays are ON. Refer to the following instructions.

SW1	Display							
1 2 3 4 5 6 7 8 9 1 0	LD1	LD2	LD3	LD4	LD5	LD6	LD7	LD8
ON 1 2 3 4 5 6 7 8 9 10	21S4a	21S4b		CH11	CH12			
ON 1 2 3 4 5 6 7 8 9 10	SV1	SV2 *1	SV3	SV4a *1	SV4b *1	SV4c *1		
ON 1 2 3 4 5 6 7 8 9 10	SV5a *1	SV5b			SV4d *1		52F	

*1 Applicable to the PURY sereis only

When a valve malfunctions, check if the wrong solenoid valve coil is not attached the lead wire of the coil is not disconnected, the connector on the board is not inserted wrongly, or the wire for the connector is not disconnected.

(1) In case of 21S4a (4-way switching valve)
About this 4-way valve
When not powered:
The electricity runs between the oil separator exit and the heat exchanger (in case of P126 - P144 model) HEXB, between heat exchangers at the rear (in case of P168 - P234 models), between HEX1a and 2a (heat exchanger on the right (as you face the front of the unit)), and between the gas ball valve (BV1) and the accumulator. This circulation is for cooling.
When powered:
The electricity runs between the oil separator and the gas ball valve, and between the heat exchanger and the accumulator. This circulation is for heating.

Check the LED display and the intake and the discharge temperature for the 4-way valve to check whether the valve has no faults and the electricity runs between where and where.Do not touch the pipe when checking the temperature, as the pipe on the oil separator side will be hot.
∗Do not give an impact from outside, as the outer hull will be deformed leading to the malfunction of the inner valve.

(2) In case of 21S4b (4-way switching valve) (only for P126-P234 models)
About this 4-way valve
When not powered:
The electricity runs between the oil separator exit and the heat exchanger (in the case of P126 - P144 model) HEXF, between heat exchangers at the front(in the case of P168-P234 models), and between HEX1b and 2b (heat exchanger on the left (as you face the front of the unit)).
When powered:
The electricity runs between the heat exchanger and the accumulator, and the valve opens or closes the heat exchanger circuit when cooling or heating.

Check the LED display and the switching sound to check whether the valve has no faults, however, it may be occasionally difficult to check by the sound, as the switching coincides with 21S4a and 21S4c. In this case, check the intake and the discharge temperature for the 4-way valve to check that the electricity runs between where and where.
∗Do not touch the valve when checking the temperature, as it will be hot.
∗Do not give an impact from outside, as the outer hull will be deformed leading to the malfunction of the inner valve.

(3) In case of SV1 (Bypass valve)
This solenoid valve opens when powered (Relay ON).
1) At compressor start-up, the SV1 turns on for 4 minutes, and the operation can be checked by the self-diagnosis LED display and the closing sound.
2) To check whether the valve is open or closed, check the change of the SV1 downstream piping temperature while the valve is being powered.Even when the valve is closed, high-temperature refrigerant flows inside the capillary next to the valve.
(Therefore, temperature of the downstream piping will not be low with the valve closed.)

(4) In the case of SV2 (Bypass valve) (applicable to the PURY series only)
This solenoid valve opens when powered (Relay ON).
In the case of heating-only or heating-main, the valve turns on when the low pressure (LPS) becomes 0.25MPa [36psi] or less 5 minutes after the compressor starts.
To check whether the valve is open or closed, check the change of the SV2 downstream piping temperature while the valve is being powered. When the valve is open, high-temperature gas will run. Do not touch the pipe when checking the temperature.

(5) In case of SV3 (Bypass valve) (Only P168-P234 types)
This solenoid valve opens when powered (Relay ON).
The valve is normally powered while No.2 Comp is being stopped. (When the discharge temperature of No.1 Comp exceeds 110°C [230°F], the valve may be turned off.)
To check whether the valve is open or closed, check the change of the SV3 downstream piping temperature while the valve is being powered. When the valve is open, high-temperature gas will run. Do not touch the pipe when checking the temperature.

(6) In case of SV4a - 4d [P72 - P144 models], SV4a - 4d, 5a, 5b [P168 - P234 models] (heat exchanger capacity control) (applicable to the PURY series only)
1) In the case of cooling-only, one or more valves among SV4a - 4d, 5a, and 5b turn(s) on depending on the condition. Check the operation by LED display and operation sound of the solenoid valve.
2) In the case of heating only, all of SV4a - 4d, 5a, and 5b turn on. The operation can be checked by LED display and operation sound of the solenoid valve.
3) In the case of cooling-main or heating-main, one or more valves among SV4a - 4d, 5a, and 5b turn(s) on. Check the operation by LED display and operation sound of the solenoid valve.
4) Refrigerant flow is as shown in the figure below.In the case of cooling-only or cooling-main mode, high-temperature (high-pressure) flow is shown, and in the case of heating-only or heating-main mode, low-temperature gas or liquid flow is shown.Refer to the refrigerant circuit figure.Turn on or off the solenoid valve depending on the indoor unit capacity or the outdoor temperature.Check the LED monitor.Remove the SV coil, open the lid, and check the plunger. Pin-face tools, which are specified in service parts list, are required

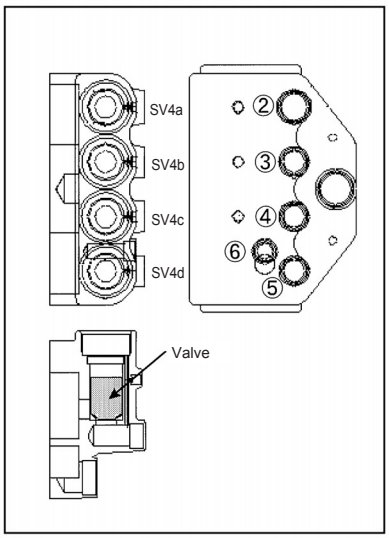

Solenoid valve block

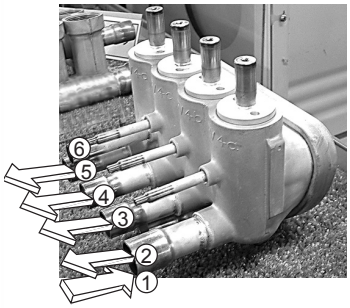

Refrigerant Circuit Figure (P72 ~ P144 models)

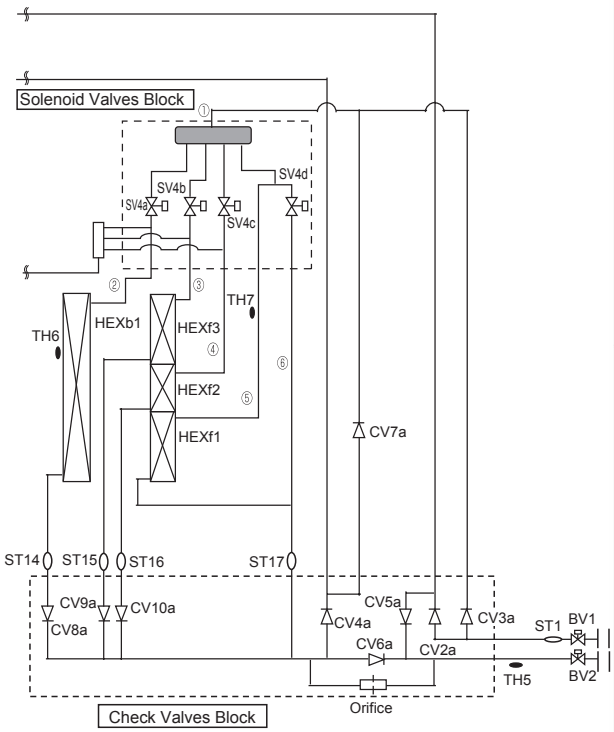

Solenoid valve block 1

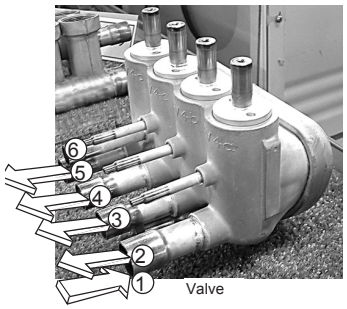

Refrigerant Circuit Figure (P168 ~ P234 models)

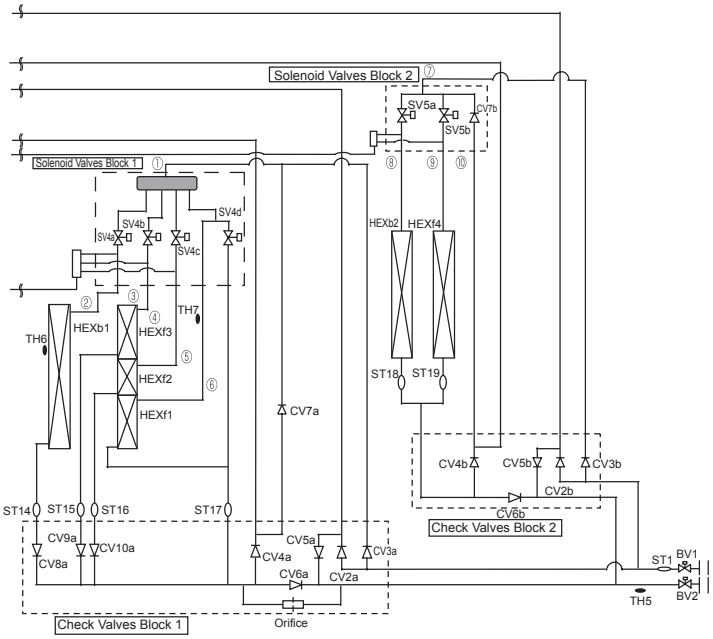

Solenoid valve block 2

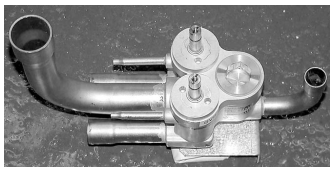

Pin-face tool

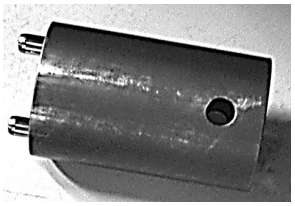

Pin-face tool

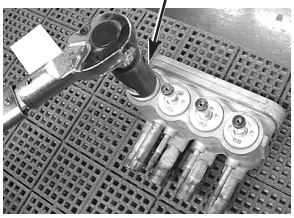

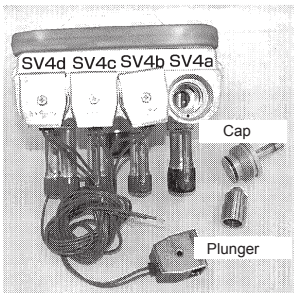

Tightening torque : 150N･m

(7) In case of SV5b (2-way switching valve) (only for P126-P234 models)
This 2-way valve is closed when powered. Check the LED display and the switching sound to check whether the valve has no faults.When cooling, the switching coincides with 21S4b. When it is difficult to check by the sound, check the temperature at the front and the back of the pipe to check whether the refrigerant is flowing.
∗Do not give an impact from the outside, as the outer hull will be deformed, leading to the malfunction of the inner valve.

-4- Outdoor Unit Fan

- To check the revolution of the fan, check the inverter output state on the self-diagnosis LED, as the inverter on the outdoor fan controls the revolutions of the fan.The revolution of the fan is approximately 600rpm at full speed.
- When starting the fan, the fan runs at full speed for 5 seconds.
- For the 2 fans for P168 - P234 models, the fan on the right (as you face the fan) runs at all times and the fan on the left runs when required.(When heating except for defrost, both fans run.)
- When setting the DIP SW1 as shown in the figure below, the inverter output [%] will appear. 100% indicates the full speed and 0% indicates the stopping.

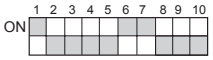

- As the revolution of the fan changes under control, at the interphase or when the indoor unit operation capacity is low, the revolution of the fan may change.
- When the fan does not work or an abnormal vibration occurs, the FAN board has a problem, or the fan motor runs under open phase or opposite phase. (The microcomputer detects the open phase or the opposite phase of the main power source; however, these malfunctions)
- When the only one of the fans is running and the other fan is stopped, check the 52F output state on the self-diagnosis LED first and check the fan connector and 52F connector misconnection, 52F failure, or the lead wire disconnection.

-5- Check Valve Block (applicable to the PURY series only)

By turning on or off SV4a-4d, 5a, and 5b on and off, the refrigerant flows through ⑥, ⑦, ⑧, and ⑨. Check the LED monitor. Valve plug A, B, and C can be removed with 3 kinds of hex wrenches.

Refrigerant Circuit Figure (P72 ~ P144 models)

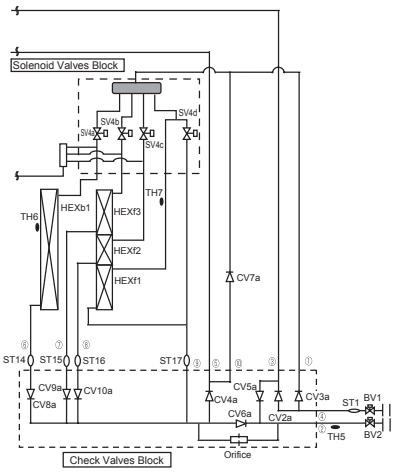

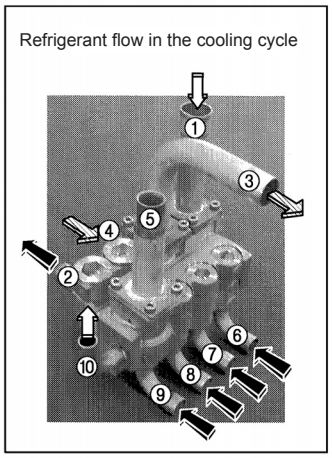

Check valve block 1

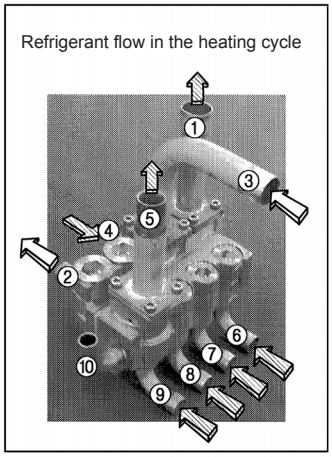

Check valve block 1

High pressure (gas)
High pressure (liquid)
Low pressure (gas/liquid)

Refrigerant Circuit Figure (P168 ~ P234 models)

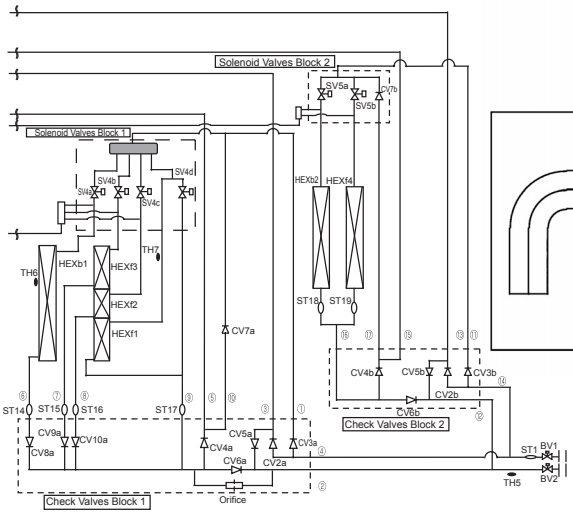

Hex wrench

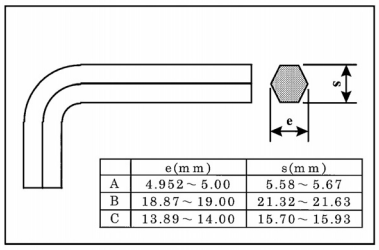

	e(mm)	s(mm)
A	4.952～5.00	5.58～5.67
B	18.87～19.00	21.32～21.63
C	13.89～14.00	15.70～15.93

Check valve block 1

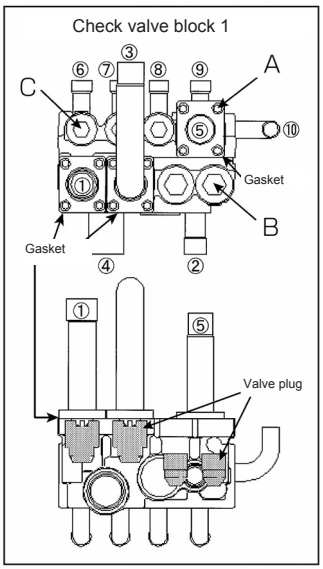

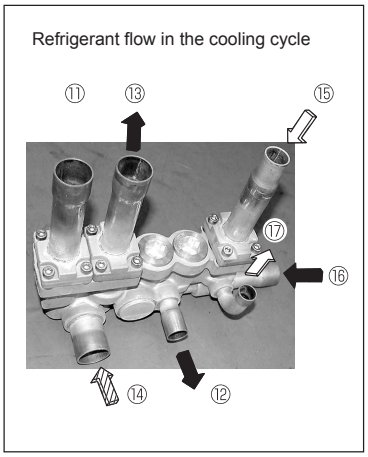

Check valve block 2 (P168 ~ P234 models only)

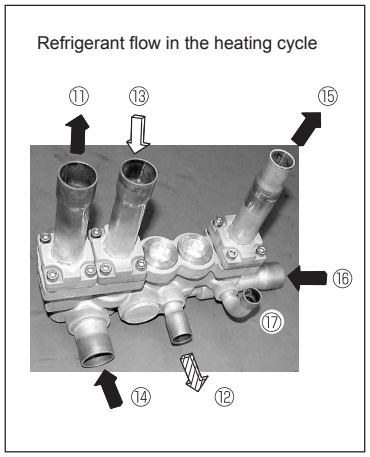

Check valve block 2 (P168 ~ P234 models only)

High pressure (gas)
High pressure (liquid)
High pressure (gas/liquid)

-6- LEV

LEV operation

The LEV receives pulse signal from the board and the valve is driven by the stepping motor.

(1) Indoor LEV and BC controller LEV
The valve opening changes according to the number of pulses.

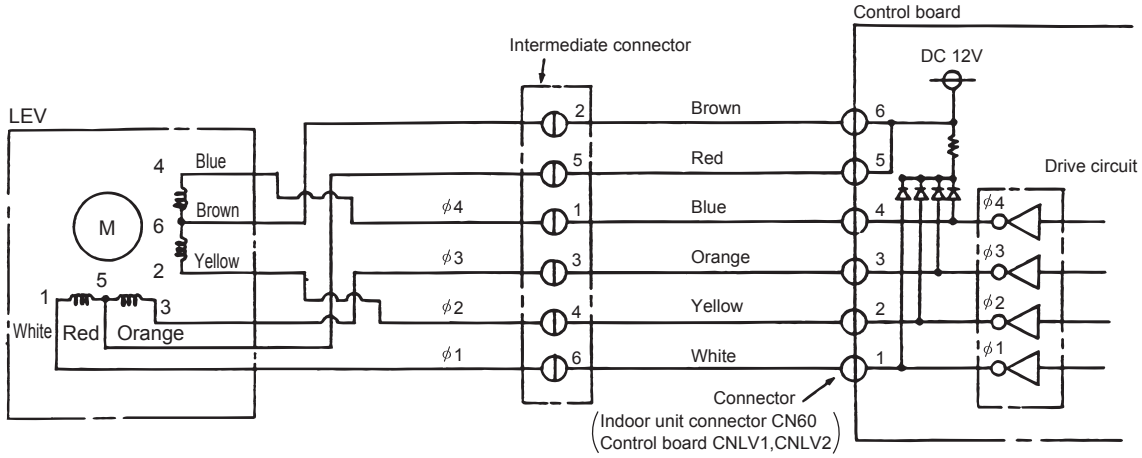

Note. The connector numbers on the intermediate connector and the connector on the control board differ. Check the color of the lead wire to judge the number.

Pulse signal output and valve operation

Output (phase) number	Output state			
	1	2	3	4
φ1	ON	OFF	OFF	ON
φ2	ON	ON	OFF	OFF
φ3	OFF	ON	ON	OFF
φ3	OFF	OFF	ON	ON

[Pulse signal output and valve operation]
Output pulses change in the following orders when the
Valve is closed; 1 → 2 → 3 → 4 → 1
Valve is open; 4 → 3 → 2 → 1 → 4

*1. When the LEV opening angle does not change, all the output phases will be off.
*2. When the output is open phase or remains ON, the motor cannot run smoothly, and rattles and vibrates.

LEV valve closing and opening operation

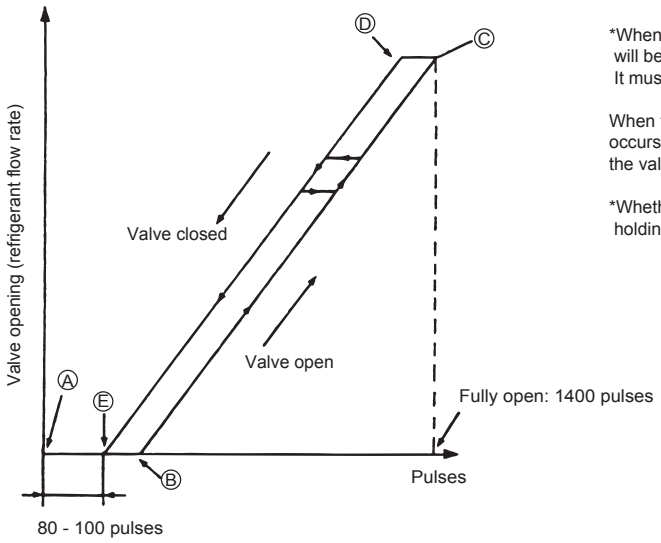

*When the power is turned on, the valve closing signal of 2200 pulses will be output from the indoor board to LEV to fix the valve position. It must be fixed at point Ⓐ

When the valve operates smoothly, no sound from LEV or no vibration occurs, however, when the pulses change from Ⓔ to Ⓐ in the chart or the valve is locked, a big sound occurs.

*Whether a sound is generated or not can be determined by holding a screwdriver against it, then placing your ear against the handle.

(2) Outdoor LEV (applicable to the PUHY series only)
The valve opening changes according to the number of pulses.
<Connections between the outdoor MAIN board and LEV1 (outdoor expansion valve)>

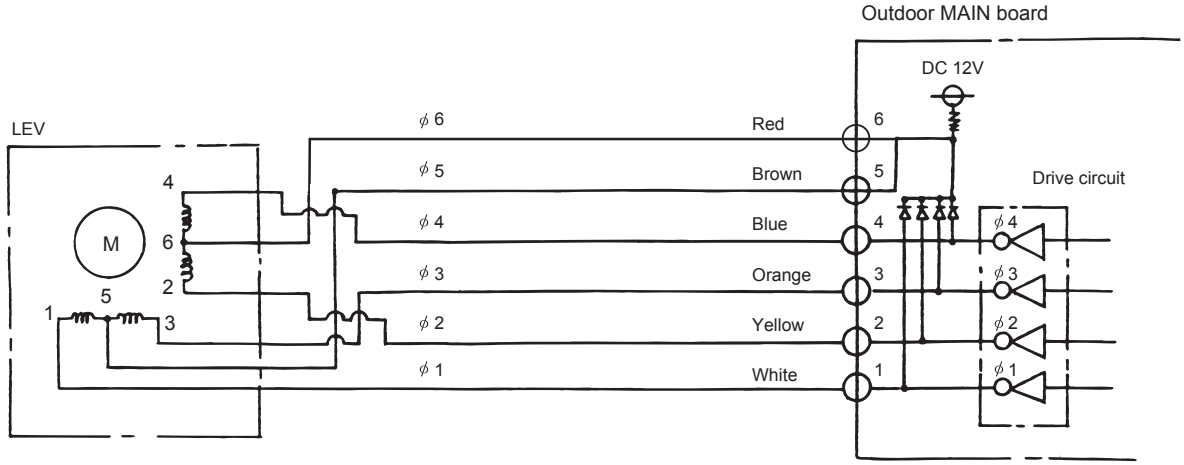

Pulse signal output and valve operation

Output (phase) number	Output state							
	1	2	3	4	5	6	7	8
φ1	ON	OFF	OFF	OFF	OFF	OFF	ON	ON
φ2	ON	ON	ON	OFF	OFF	OFF	OFF	OFF
φ3	OFF	OFF	ON	ON	ON	OFF	OFF	OFF
φ4	OFF	OFF	OFF	OFF	ON	ON	ON	OFF

[Pulse signal output and valve operation]
Output pulses change in the following orders when the
Valve is closed; 1 → 2 → 3 → 4 → 5 → 6 → 7 → 8 → 1
Valve is open; 8 → 7 → 6 → 5 → 4 → 3 → 2 → 1 → 8

*1. When the LEV opening angle does not change, all the output phases will be off.
*2. When the output is open phase or remains ON, the motor cannot run smoothly, and rattles and vibrates.

LEV valve closing and opening operation

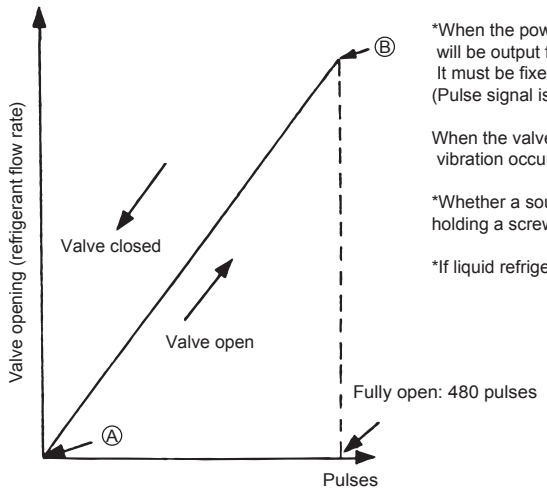

*When the power is turned on, the valve closing signal of 520 pulses will be output from the indoor board to LEV to fix the valve position. It must be fixed at point Ⓐ
(Pulse signal is output for approximately 17 seconds.)

When the valve operates smoothly, there is no sound from the LEV and no vibration occurs, but when the valve is locked, noise is generated.

*Whether a sound is generated or not can be determined by holding a screwdriver against it, then placing your ear against the handle.

*If liquid refrigerant flows inside the LEV, the sound may become smaller.

(3) Judgment methods and possible failure mode

Note:

The specifications of the outdoor unit (outdoor LEV) and the indoor unit (indoor LEV) differ.Therefore, remedies for each failure may vary. Check the remedy specified for the appropriate LEV as indicated in the right column.

Malfunction mode	Judgment method	Remedy	Target LEV
Microcomputer driver circuit failure	Disconnect the control board connector and connect the check LED as shown in the figure below. 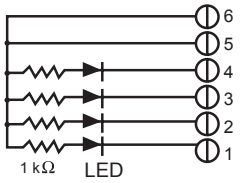 When the main power is turned on, the indoor board or the outdoor MAIN board outputs pulse signals to the indoor LEV for 10 seconds, and to the outdoor LEV for 17 seconds. If the self-diagnosis LED is not lit, or remains lit, the driver circuit has a problem.	When the drive circuit has a problem, replace the control board.	Indoor Outdoor
LEV mechanism is locked	If the LEV is locked, the drive motor runs idle, and makes a small clicking sound. When the valve makes a closing and opening sound, the valve has a problem.	Replace the LEV.	Indoor Outdoor
Disconnected or short-circuited LEV motor coil	Measure resistance between the coils (red - white, red -orange, brown - yellow, brown - blue) using a tester. They are normal if resistance is 150 ± 10%.	Replace the LEV coils.	Indoor
	Measure resistance between the coils (red - white, red -orange, brown - yellow, brown - blue) using a tester. They are normal if resistance is 46 within 3%.	Replace the LEV coils.	Outdoor
Incomple sealing (leak from the valve)	When checking the refrigerant leak from the indoor LEV, run the target indoor unit in the fan mode, and the other indoor units in the cooling mode. Then, check the liquid temperature (TH22) with the self-diagnosis LED. When the unit is running in the fan mode, the LEV is fully closed, and the temperature detected by the thermistor is not low. If there is a leak, however, the temperature will be low. If the temperature is extremely low compared with the inlet temperature displayed on the remote controller, the LEV is not properly sealed, however, if there is a little leak, it is not necessary to replace the LEV when there are no effects to other parts. 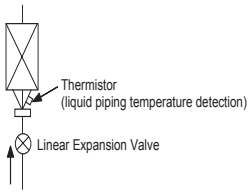 	If there is a large amount of leakage, replace the LEV.	Indoor
Faulty wire connections in the connector or faulty contact.	1. Check for loose pins on the connector and check the colors of the lead wires visually 2. Disconnect the control board's connector and conduct a continuity check using a tester.	Check the continuity at the points where an error occurs.	Indoor Outdoor

(4) Outdoor LEV coil removal procedure (applicable to the PUHY series only)

LEV component

As shown in the figure, the outdoor LEV is made in such a way that the coils and the body can be separated.

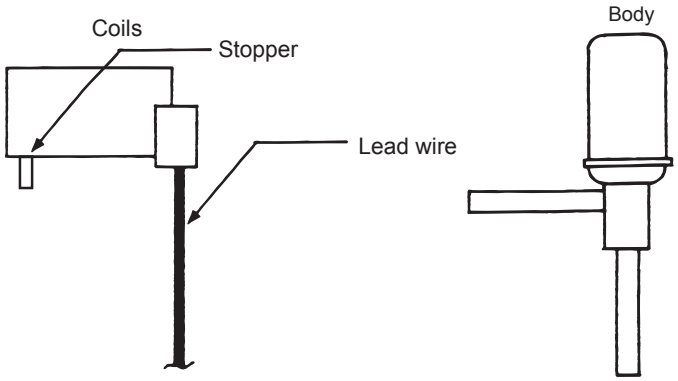

Removing the coils:

Fasten the body tightly at the bottom (Part A in the figure) so that the body will not move, then pull out the coils toward the top.If the coils are pulled out without the body gripped, undue force will be applied and the pipe will be bent.

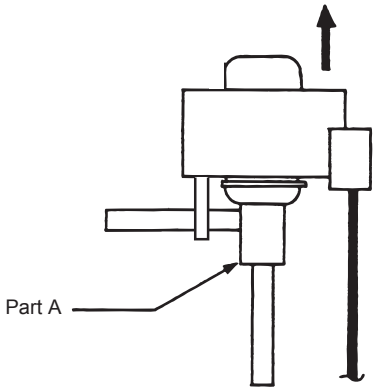

Installing the coils

Fix the body tightly at the bottom (Part A in the figure) so that the body will not move, then insert the coils from the top, and insert the coil stopper securely in the pipe on the body. Hold the body when pulling out the coils to prevent so that the pipe will not be bent.

If the coils are pushed without the body gripped, undue force will be applied and the pipe will be bent. Hold the body when pulling out the coils to prevent so that the pipe will not be bent.

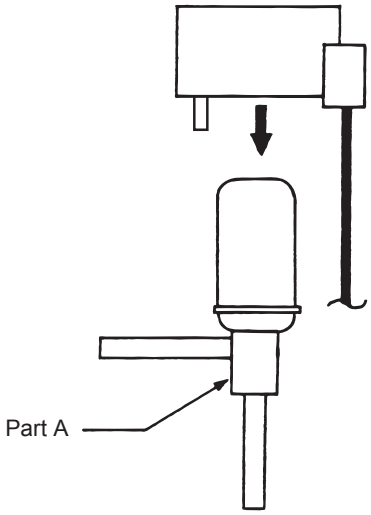

-7- Troubleshooting Principal Parts of BC Controller

1. Pressure sensor

Troubleshooting flow chart for pressure sensor

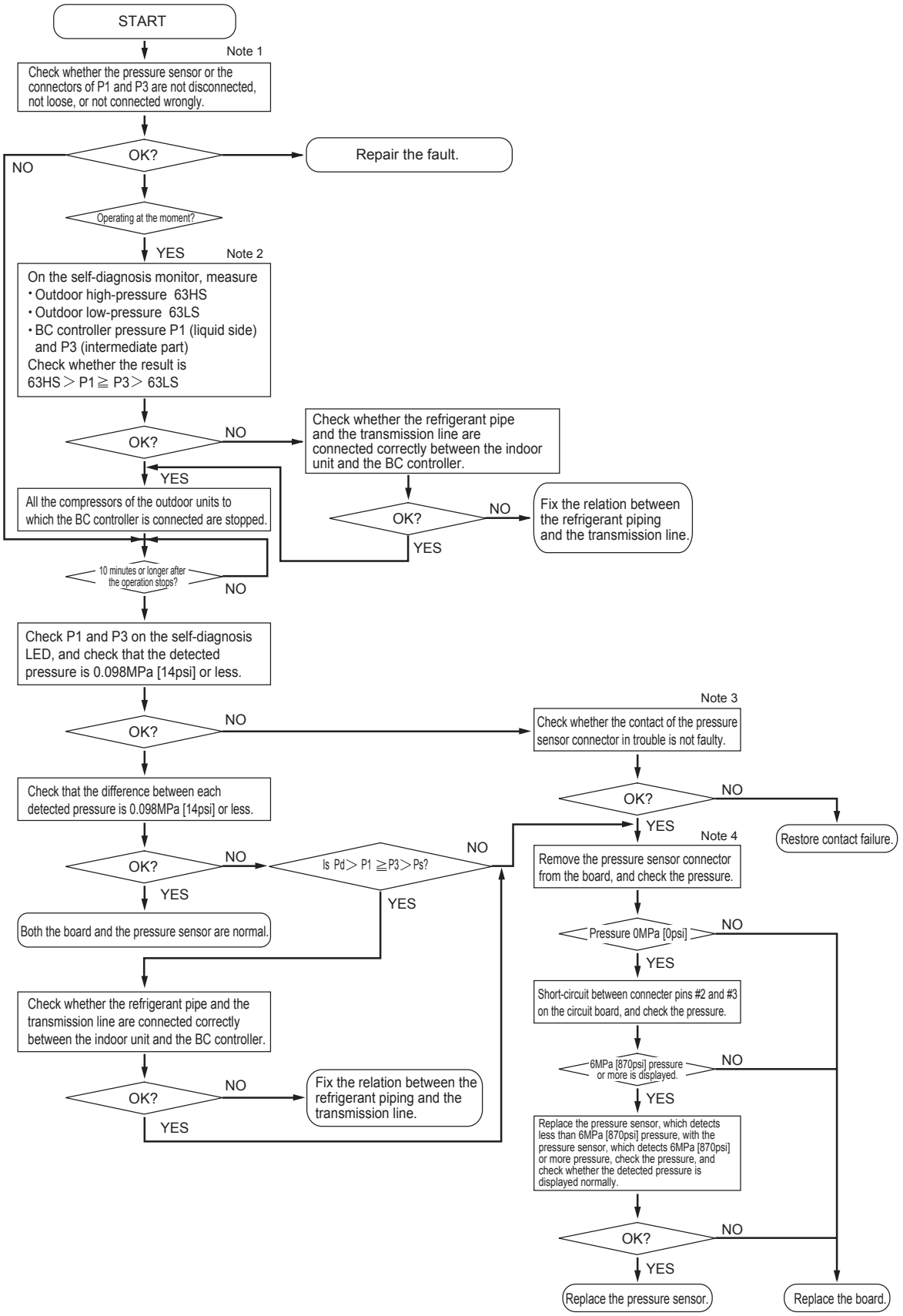

Note1 BC controller: Phenomena when the pressure sensor is connected wrongly (reverse connection of P1 and P3) to the board.

Symptoms						
Cooling-only	Cooling-main		Heating only		Heating main	
Normal	Non-cooling	SC11 large SC16 small △PHM large	Indoor heating SC small Heating indoor Thermo ON Especially noise is large.	SC11 large SC16 small △PHM large	Non-cooling Indoor heating SC small Heating indoor Thermo ON Especially noise is large.	SC11 large SC16 small △PHM large

Note2 Check the self-diagnosis switch (Outdoor control board SW1).

	Measurement data	Symbol	SW1 setting value
	Outdoor high pressure	63HS	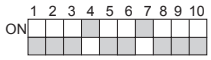
	Outdoor low pressure	63LS	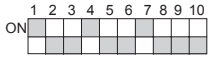
	BC controller pressure (liquid side)	P1	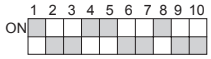
	BC controller pressure (intermediate part)	P3	

Note3 Check whether CNP1 (liquid side) connector on the BC controller control board and the connector CNP2 (intermediate part) are not disconnected or not loose.

Note4 Check the pressure value on the self-diagnosis switch (same as note1) with the connector of the applied pressure sensor is disconnected from the board.

2. Temperature sensor

Troubleshooting instructions for thermistor

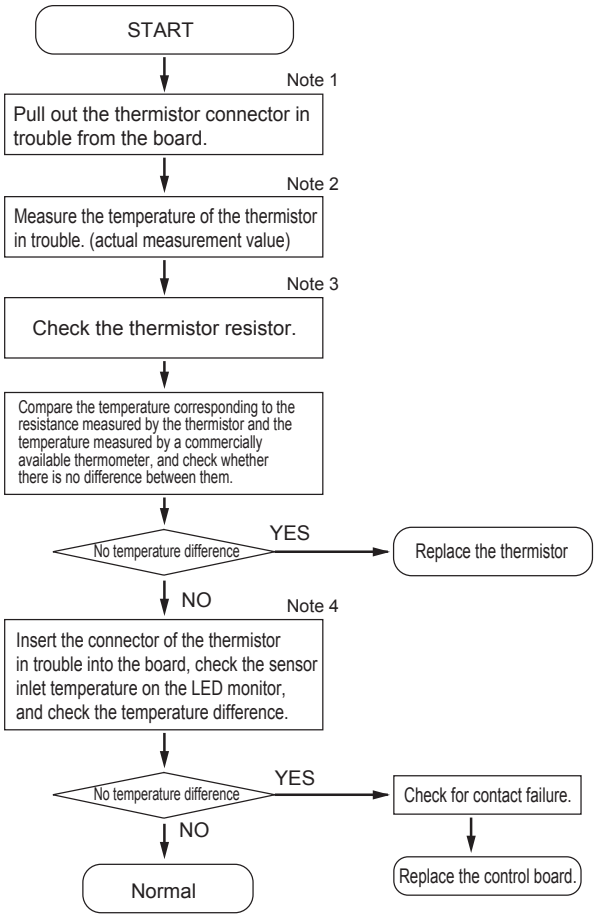

Note1 For the connectors on the board, TH11 and TH12 are connected to CN10, and TH15 and TH16 are connected to CN11. Disconnect the connector in trouble, and check the sensor of each number.

Note 2, 3

1) Pull out the sensor connector from the I/O board
Do not pull the sensor by holding the lead wire.
2) Measure the resistance with such as a tester.
3) Compare the measured value with that of shown in the figure below. When the result is +-10%, it is normal.

Note4 Check the self-diagnosis switch (Outdoor control board SW1).

	Measurement data	Symbol	SW1 setting value
NU-G・GA (Standard / main)	Liquid inlet temperature	TH11	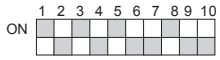
	Bypass outlet temperature	TH12	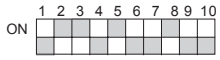
	Bypass inlet temperature	TH15	
	Bypass inlet temperature	TH16	
NU-GB (Sub 1)	Bypass outlet temperature	TH22	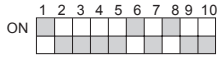
	Bypass inlet temperature	TH25	
NU-GB (Sub 2)	Bypass outlet temperature	TH22	
	Bypass inlet temperature	TH25	

3. Troubleshooting flow chart for LEV Solenoid valve

(1) LEV

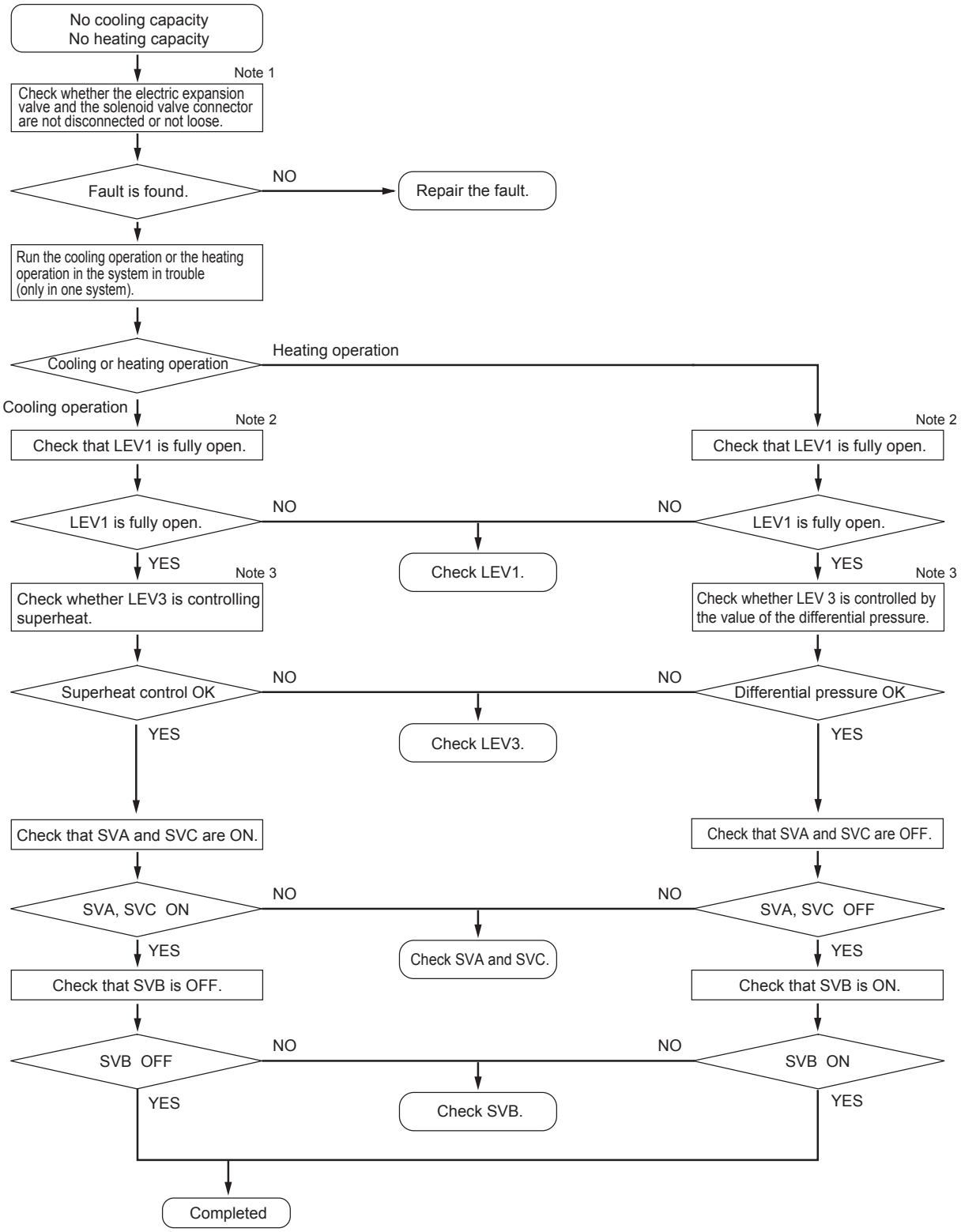

Note1 BC controller: Phenomena when LEV is connected wrongly (reverse connection of LEV1 and LEV3) to the board.

Phenomena			
Cooling-only	Cooling-main	Heating only	Heating main
Non-cooling SH12 small, SC11 small SH16 small, branch pipe SC small BC controller sound	Non-cooling and non-heating SH12 small, SC11 small SH16 large, but branch pipe SC small BC controller sound △PHM large	Indoor heating SC small △ PHM large	Non-cooling Indoor heating SC small △ PHM large

Note2 Check method of fully open state or fully closed state of LEV

1) Check LEV opening (pulse) on the self-diagnosis LED (Outdoor control board SW1).
   Full open: 2000 pulses
   Fully closed: 110 pulses (In the case of heating-only mode, however, the pulse may become 110 or more.)
2) When LEV is fully open, measure the temperature at the upstream and downstream pipes of LEV, and make sure that there is no temperature difference.
3) When LEV is fully closed, check that there is no refrigerant flowing sound.

Note3 Refer to the chart below to judge LEV opening controlled by the values of the differential pressure and of the superheat. (BC controller LEV basic operation characteristic)

	Part	Malfunction mode	Operation mode	Content	Standards of judgment on unit stable operation
NU-G,GA (Main)	LEV1	Inclined to close	Heating only Heating-main Cooling-main	Difference between high pressure (P1) and intermediate pressure (P3) is large.	0.3 - 0.4MPa [44 - 58psi]
		Inclined to open		Difference between high pressure (P1) and intermediate pressure (P3) is small.	
	LEV3	Inclined to close	Cooling-only Cooling-main	SH12 is large.	SH12 < 20K [36°F]
			Heating only Heating-main	Difference between high pressure (P1) and intermediate pressure (P3) is small.	0.3 - 0.4MPa [44 - 58psi]
		Inclined to open	Cooling-only Cooling-main	SC16 and SH12 are small.	SC16 > 3K [5°F] SH12 > 3K [5°F]
			Heating only Heating-main	Difference between high pressure (P1) and intermediate pressure (P3) is large.	0.3 - 0.4MPa [44 - 58psi]
NU-GB (Sub)	LEV3a	Inclined to close	Cooling-only Cooling-main	SH22 is large.	SH22 < 20K [36°F]
		Inclined to open	Cooling-only Cooling-main	SH22 is small.	SH22 > 3K [5°F]

Self-diagnosis LED

	Measurement data	Symbol	SW1 setting value
NU-G・GA (Standard / main)	LEV1 opening	—	
	LEV2 opening	—	
	LEV3 opening	—	
	BC controller bypass outlet superheat	SH12	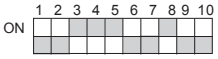
	BC controller intermediate part subcool	SC16	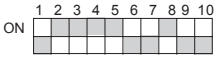
	BC controller liquid-side subcool	SC11	
NU-GB (Sub 1)	LEV3a opening	—	
NU-GB (Sub 2)	LEV3a opening	—	

Troubleshooting flow chart for solenoid Troubleshooting flow chart for solenoid valve body

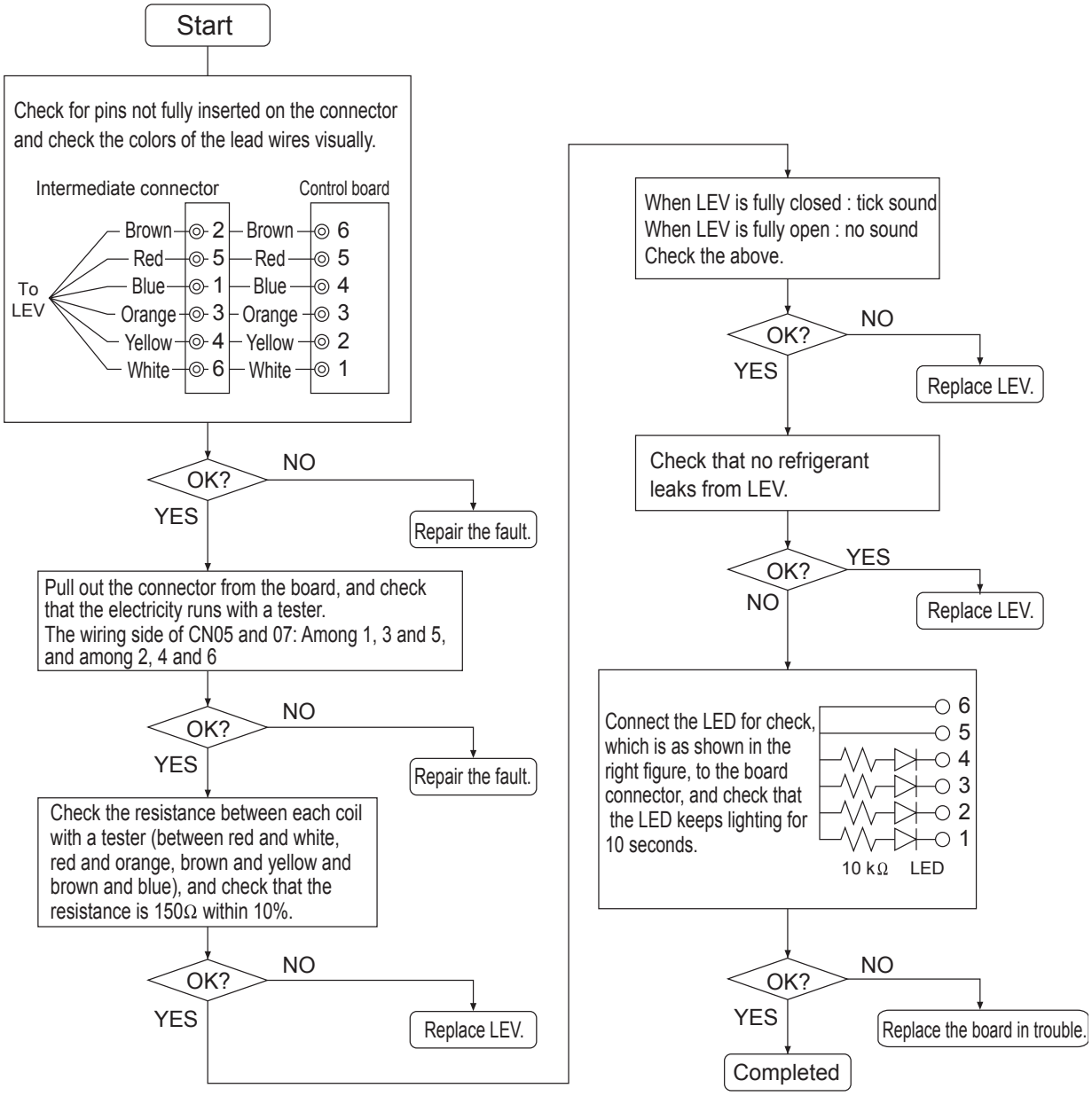

(2) Solenoid valve (SVA, SVB, SVC)

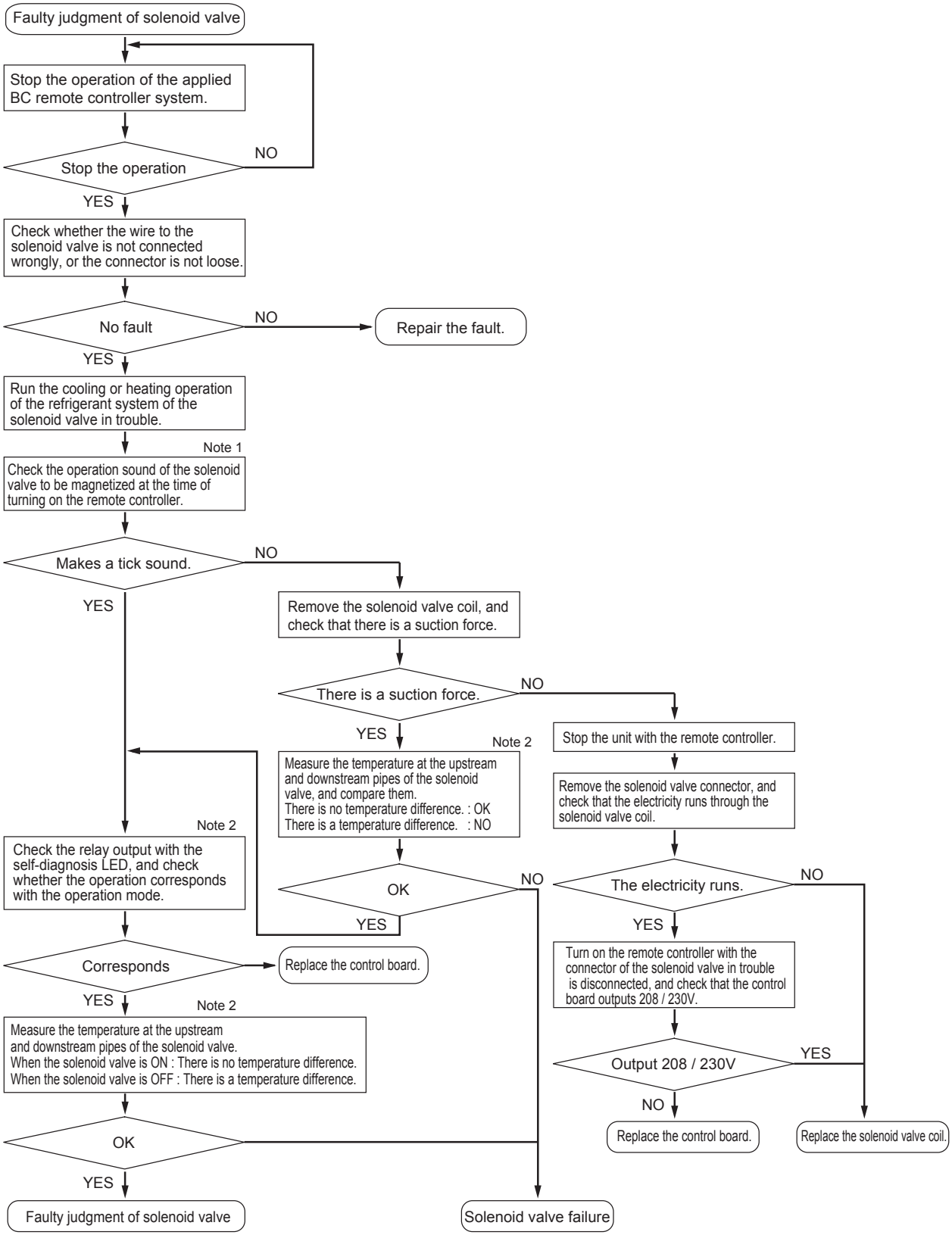

Check whether the BC board output signal corresponds with the solenoid valve operation correspond.

Note1 SVA, SVB, SVC

SVA, SVB, and SVC turn on or off according to the indoor unit operation mode.

		Mode				
		Cooling	Heating	Stopped	Defrost	Fan
Port	SVA	ON	OFF	OFF	OFF	OFF
	SVB	OFF	ON	OFF	OFF	OFF
	SVC	ON	OFF	OFF	OFF	ON

SVM,SVM2

SVM1 and SVM2 turn on or off according to the operation mode.

Operation mode	Cooling only	Cooling main	Heating only	Heating main	Defrost	Stopped
SVM1	ON	Pressure differ-ential control OFF or ON	OFF	OFF	ON	OFF
SVM2	OFF	OFF	Pressure differ-ential control OFF or ON	Pressure dif-ferential con-trol OFF or ON	OFF	OFF

Note2 SVA, SVB, SVC

Measure the temperature at the upstream and downstream pipes ① and ② of SVA.
Measure the temperature at the upstream and downstream pipes ① and ③ of SVA.

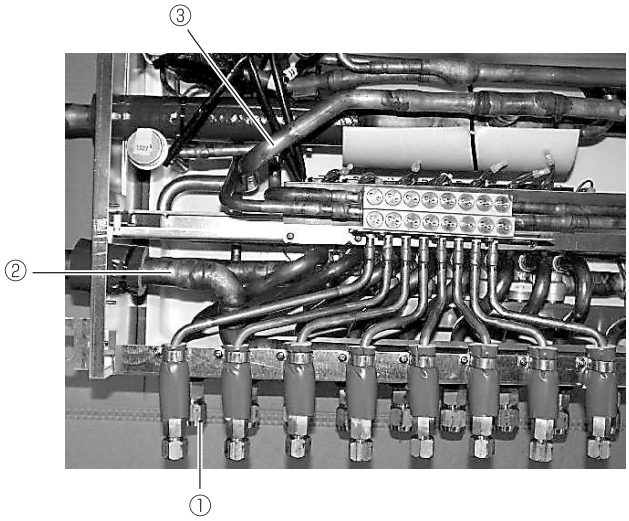

4. BC controller transformer

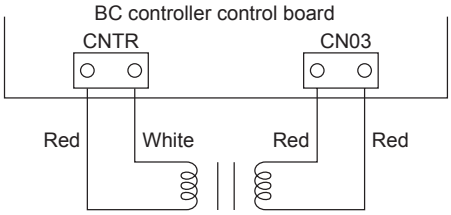

	Normal	Abnormal
CNTR(1) - (3)	about 58 ohm.	Open-phase or shorting
CN03(1) - (3)	about 16 ohm.	

*Before measuring the resistance, pull out the connector.

-8- Inverter

- Replace only the compressor if only the compressor is found to be defective. Overcurrent will flow through the inverter if the compressor is damaged, however, the power supply is automatically cut when overcurrent is detected, protecting the inverter from damage.
- Replace only the fan motor if only the fan motor is found to be defective. (Overcurrent will flow through the inverter if the fan motor is damaged, however, the power supply is automatically cut when overcurrrent is detected, protecting the inverter from damage.)
- Replace the defective components if the inverter is found to be defective.
- If both the compressor and the inverter are found to be defective, replace the defective component(s) of both devices.

(1) Inverter related problems and countermeasures

	Error display/failure condition	Measure/inspection item
[1]	Inverter related errors 4250, 4255, 4220, 4225, 4230, 4235, 4240, 4245, 4260, 4265, 5301, 0403, 5110	Check the details of the inverter error in the error log at 10.[1] Table of LED codes. Take appropriate measures to the error code and the error details in accordance with 9. [3] Self-diagnosis on the basis of Error Display on Remote Controller and Remedy for Error.
[2]	Main power breaker trip	<1> Check the breaker capacity.
		<2> Check whether the electrical system is short-circuited or ground-faulted.
		<3> If items cause is not <1>or <2> are not the causes of the problem, see (3)-[1].
[3]	Main power earth leakage breaker trip	<1> Check the earth leakage breaker capacity and the sensitivity current.
		<2> Meg failure for electrical system other than the inverter
		<3> If the cause is not <1>or <2>, see (3)-[1]
[4]	Only the compressor does not operate.	Check the inverter frequency on the LED monitor and proceed to (2) -[3] if the compressor is in operation.
[5]	The compressor vibrates violently at all times or makes an abnormal sound.	See (2)-[3].
[6]	Only the fan motor does not operate.	Check the inverter frequency on the LED monitor and proceed to (2)-[6], [7] if the fan motor is in operation.
[7]	The fan motor shakes violently at all times or makes an abnormal sound.	Check the inverter frequency on the LED monitor and proceed to (2)-[6], [7] if the fan motor is in operation.
[8]	Noise is picked up by the peripheral device	<1> Check that power supply wiring of the peripheral device does not run close to the power supply wiring of the outdoor unit.
		<2> Check that the inverter output wiring is not in close contact with the power supply wiring and the transmission lines.
		<3> Check that the shielded wire is used as the transmission line when it is required, and check that the grounding work is performed properly on the shielded wire.
		<4> Meg failure for electrical system other than the inverter
		<5> Attach a ferrite core to the inverter output wiring. (Contact the factory for details of the service part settings.)
		<6> Provide separate power supply to the air conditioner and other electric appliances.
		<7> *If the error occurred suddenly, a ground fault of the inverter output can be considered. See (2)-[3].
		*Contact the factory for cases other than those listed above.
[9]	Sudden malfunction (as a result of external noise.)	<1> Check that the grounding work is performed properly.
		<2>Check that the shielded wire is used as the transmission line when it is required, and check that the grounding work is performed properly on the shielded wire.
		<3>Check that neither the transmission line nor the external connection wiring does not run close to another power supply system or does not run through the same conduit pipe.
		* Contact the factory for cases other than those listed above.

Note:
1. Due to a large capacity electrolytic capacitor used in the inverter, voltage still flows through even after the unit is turned off, which may cause electric shock.As a result, wait for a sufficient length of time (5~10 minutes) after the main power is turned off, and check the voltage drop at both terminals of the electrolytic condensers.
2. The components of the inverter such as IPM will be damaged if the screws for inverter wiring are not tightened tightly or the connectors are not properly inserted.When an error occurs after the components are replaced, the wrong wiring is the cause in most cases. Check that the wiring is correct, the screws are not loosely tightened, and the connectors and Faston are not loosely inserted.
3. Do not remove or insert inverter connectors with the main power supply on, as this will result in damage to the PCB.
4. The electric current sensor will be damaged if current flows without the control board being connected.Always insert connectors into the corresponding PCB when running the inverter.

(2) Inverter output related troubles

	Items to be checked	Phenomena	Remedy
[1] Check the compressor INV board error detection circuit.	Perform the following: Remove the connector (CNDR2) on the compressor INV board. Operate the outdoor unit after above steps. Check the error status. (The compressor does not run because CNDR2, which outputs the IPM drive signal, has been disconnected.)	1) IPM/overcurrent breaker trip (4250 Detail code No. 101, 102, 103, 104, 105, 106, and 107)	Replace the compressor INV board.
		2) Logic error (4250 Detail code No. 111)	Replace the compressor INV board.
		3) ACCT sensor circuit failure (5301 Detail code No.115)	Check the resistance of the current sensor ACCT referring to 9.[4].8.(4) "Current Sensor ACCT", and replace the sensor when abnormal. Replace the compressor INV board if the ACCT is normal.
		4) DCCT sensor circuit failure (5301 Detail code No.116)	Replace the DCCT sensor. After replacing the DCCT, operate the outdoor unit again.In the case when the error occurs again, replace the compressor INV board. (The DCCT may be normal.)
		5) IMP open (530 Detail code No.119)	Normal
[2] Check for compressor ground fault or coil error.	Disconnect the compressor wiring, and check the compressor Meg, and coil resistance.	1) Compressor Meg failure Error if less than 1 Mohm. When no liquid refrigerant in the compressor 2) Compressor coil resistance failure Coil resistance value of 0.16 ohm (20°C [68°F)	Replace the compressor Check that no liquid refrigerant in the compressor.

	Items to be checked	Phenomena	Remedy
[3] Check whether the inverter is damaged. *Perform this check if an error occurs immediately before or after turning on the compressor.	Perform the following: (1) Reconnect the connector that was removed in section [1]. (2) Disconnect the compressor wiring. (3) Turn on SW1-1 on the compressor INV board. Operate the outdoor unit after above steps.Check the inverter output voltage. *It is recommended to use the tester used in the 9.[4] -5-(5) IPM troubleshooting when checking the inverter output voltage. Measure voltage when the compressor inverter output frequency is stable.	1) IPM/overcurrent breaker trip (4250 Detail code No. 101, 102, 103, 104, 105, 106, and 107)	Refer to item [5] for inverter circuit trouble.
		2) The voltage imbalance across all wiring There is a high possibility of an inverter circuit error if the voltage imbalance across all wiring is greater than the larger of the values represented by 5% or 5V.	
		3) No voltage imbalance across all wiring	See item [2]. Proceed to item [5], however if there is no problem in section [2]. Replace the compressor if there is no problem in section [5].
[4] Check whether the inverter is damaged.Perform this check if an error occurs during operation.	Turn on the outdoor unit. Check the inverter output voltage. *It is recommended to use the tester used in the 9.[4] -5- (5) IPM troubleshooting when checking the inverter output voltage. *Measure voltage when the compressor inverter output frequency is stable.	1) The voltage imbalance across all wiring There is a high possibility of an inverter circuit error if the voltage imbalance across all wiring is greater than the larger of the values represented by 5% or 5V.	Refer to item [5] for inverter circuit trouble.
		2) No voltage imbalance across all wiring	See item [2]. Proceed to item [5], however if there is no problem in section [2]. Replace the compressor if there is no problem in section [5].

	Items to be checked	Phenomena	Remedy
[5] Check the inverter circuit trouble.	Check whether the IPM screw terminal is not loose.	1) Terminal screws are loose.	Check for loose IPM terminal screws and tighten them.
	Check the exterior of the IPM.	2) IPM is cracked due to swelling.	Replace the IPM. Check the operation in [3] or [4] after replacing the IPM. In the case of an output voltage imbalance or error reoccurrence: Replace the G/A board. In the case of an output voltage imbalance or error reoccurrence after replacement: Replace the INV board.
	Check the resistances between each terminal of IPM. Refer to 9.[4].5.(5) for details on IPM troubleshooting.	3) Check the resistances between each terminal of IPM.	Replace the IPM.Check the operation in [3] or [4] after replacing the IPM. In the case of an output voltage imbalance or error reoccurrence: Replace the G/A board.In the case of an output voltage imbalance or error reoccurrence after replacement: Replace the INV board.
		4) All normal for items 1) - 3) above.	Replace the IPM. In the case of an output voltage imbalance or error reoccurrence: Replace the G/A board.In the case of an output voltage imbalance or error reoccurrence after replacement: Replace the INV board.
[6] Check the fan motor ground fault or the winding.	Remove the wire for the outdoor fan motor, and check the fan motor megger and the winding resistance.	1) Fan motor megger failure Failure when the megger is 1Mohm or less.	Replace the fan motor.
		2) Fan motor disconnection Standard: The winding resistance is approximately several ohm.It varies depending on the temperature, or while the inner thermo is operating, it will be ∞ ohm	
[7] Check the FAN INV board failure.	(1) Check the fan output wiring.	Connector contact failure •Board side (CNINV) •Fan motor side	Connect the connector.
	(2) Check the connector CN-VDC connection.	Connector contact failure	Connect the connector.
	(3) Check the FAN INV board failure.	1) The voltage imbalance among each motor wiring during operation The voltage imbalance is greater than the larger of the values represented by 5% or 5 V.	Replace the FAN INV board.
		2) The same error occurs even after the operation is restarted.	
	(4) Check the transformer on the FAN INV board.	The same error occurs even if the board is replaced as described in (3)	Replace the power-supply transformer on the FAN INV board.

(3) Trouble treatment when the main power breaker is tripped.

	Items to be checked	Phenomena	Remedy
[1]	Perform Meg check between the terminals on the power terminal block TB1.	Zero to several ohm, or Meg failure	Check each part in the main inverter circuit. *Refer to "Simple checking Procedures for individual components of main inverter circuit". •Diode stack •IPM •Rush current protection resistor •Electromagnetic relay •DC reactor •Noise filter (large current relay)
[2]	Turn on the power again and check again.	1) Main power breaker trip	
		2) No remote control display	
[3]	Turn on the outdoor unit and check that it operates normally.	1) Operates normally without tripping the main breaker.	a) The wiring may have been short-circuited. Search for the wire that short-circuited, and repair it. b) If item a) above is not the cause of the problem, the compressor may have a problem.
		2) Main power breaker trip	A compressor ground fault can be considered. Go to (2)-[2].

(4) Simple checking procedure for individual components of main inverter circuit
Before checking, turn the power off and remove the parts to be checked from the control box.

<table>
<tr><th>Part name</th><th>Judgment method</th></tr>
<tr><td>Diode stack</td><td>Refer to "Diode stack" (9.[4].5.(6))</td></tr>
<tr><td>IPM (Intelligent power module)</td><td>Refer to "Intelligent power module (IPM)" (9.[4] -5- (5))</td></tr>
<tr><td>Rush current protection resistor
R1</td><td>Measure the resistance between terminals: 22 ohm +- 10%</td></tr>
<tr><td>Electromagnetic relay
52C1</td><td>Measure resistance between terminals on each row.
 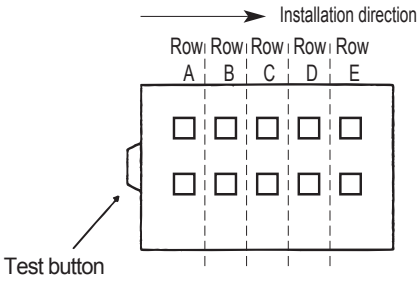

<table>
<tr><th>Check point</th><th>Judgment value</th></tr>
<tr><td>Row A</td><td>Short circuit is not allowed.</td></tr>
<tr><td>Row B to Row E</td><td>∞</td></tr>
</table>
* The coil is driven when AC 208 / 230V is applied. Note that the coil is not driven at DC 12V, which is different from the conventional relays.
The resistance of row A cannot be measured with a tester. Check that it is not short-circuited.</td></tr>
<tr><td>Electromagnetic contactor
52C2, 52F</td><td>[In the case of 52C2]
 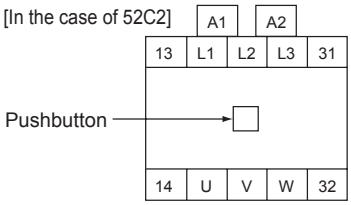

[In the case of 52F]
 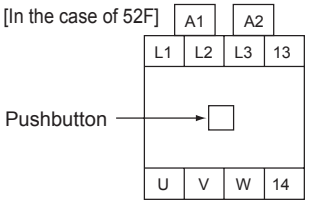

<table>
<tr><th colspan="2">Check point</th><th>Judgment value</th></tr>
<tr><td colspan="2">A1-A2</td><td>0.1 k ~ 2.0 kΩ</td></tr>
<tr><td rowspan="5">Button on (hold down)</td><td>L1 - U</td><td>1Ω or less (almost 0Ω)</td></tr>
<tr><td>L2 - V</td><td>1Ω or less (almost 0Ω)</td></tr>
<tr><td>L3 - W</td><td>1Ω or less (almost 0Ω)</td></tr>
<tr><td>13 - 14</td><td>1Ω or less (almost 0Ω)</td></tr>
<tr><td>31 - 32</td><td>∞</td></tr>
<tr><td rowspan="5">Button OFF</td><td>L1 - U</td><td>∞</td></tr>
<tr><td>L2 - V</td><td>∞</td></tr>
<tr><td>L3 - W</td><td>∞</td></tr>
<tr><td>13 - 14</td><td>∞</td></tr>
<tr><td>31 - 32</td><td>1Ω or less (almost 0Ω)</td></tr>
</table></td></tr>
<tr><td>DC reactor DCL</td><td>Measure the resistance between terminals: 1ohm or lower (almost 0 ohm)
Measure the resistance between terminals and the chassis: ∞</td></tr>
<tr><td>Noise filter</td><td>Resistance check between each terminal and between terminal and case.
 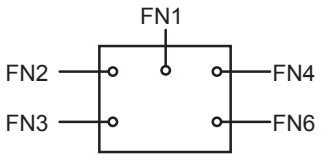

<table>
<tr><th>Check point</th><th>Judgment value</th></tr>
<tr><td>FN 3 - 6 , FN 2 - 4</td><td>1Ω or less (almost 0Ω)</td></tr>
<tr><td>FN 1 - 2 , FN 2 - 3 , FN 4 - 6</td><td>∞</td></tr>
<tr><td>FN1 , FN2 , FN3 , FN 4, FN6</td><td>∞</td></tr>
</table></td></tr>
<tr><td>Current sensor ACCT</td><td>Disconnect the CNCT2 connector and measure the resistance between terminals: 280 ohm +- 30 ohm
1 - 2 PIN (U-phase),3 - 4 PIN (W-phase)
 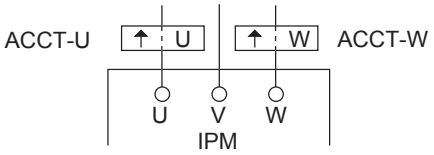

* Check the ACCT connection phase and the direction of the connection.</td></tr>
</table>

(5) Intelligent power module (IPM)

Measure resistances between each pair of terminals on the IPM with a tester, and use the results for troubleshooting.

Notes on measurement

- Check the polarity before measuring. (On the tester, black normally indicates plus.)
- Check that the resistance is not open (∞ ohm) or not shorted (to 0 ohm).
- The values are for reference, and the margin of errors is allowed.
- The result that is more than double or half of the result that is measured at the same measurement point is not allowed.

Tester restriction

- Use the tester whose internal electrical power source is 1.5V or greater
- Use the dry-battery-powered tester.
  (*The accurate diode-specific resistance cannot be measured with the button-battery-powered card tester, as the applied voltage is low.)
- Use a low-range tester if possible. A more accurate resistance can be measured.

Judgment value (reference)

		Black (+)				
		P	N	U	V	W
Red (-)	P	-	-	5 - 200 ohm	5 - 200 ohm	5 - 200 ohm
	N	-	-	∞	∞	∞
	U	∞	5 - 200 ohm	-	-	-
	V	∞	5 - 200 ohm	-	-	-
	W	∞	5 - 200 ohm	-	-	-

External view

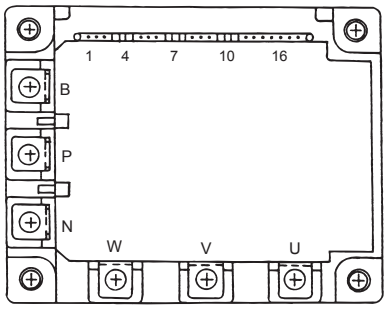

Internal circuit diagram

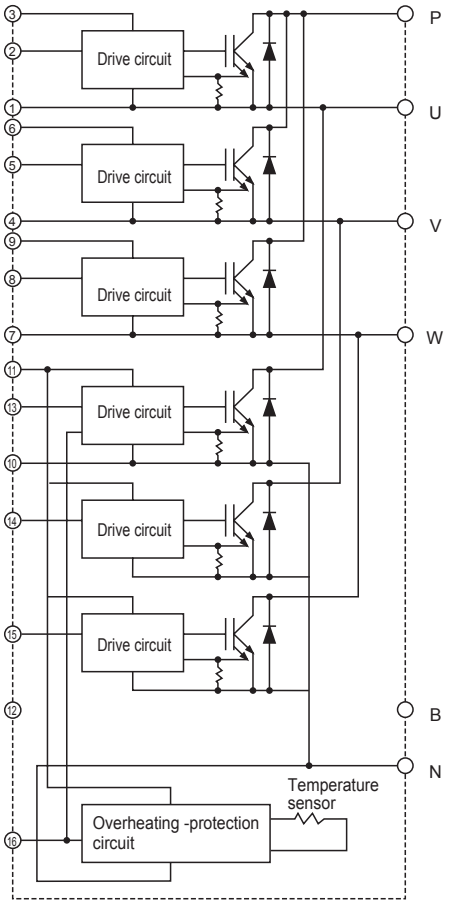

(6) Diode stack

Measure resistances between each pair of terminals on the diode stack with a tester, and use the results for troubleshooting.Refer to (5) " Intelligent power module (IPM) " for notes on measurement and tester selection.

Judgment value (reference)

		Black (+)				
		+ (P)	- (N)	to (L1)	to (L2)	to (L3)
Red (-)	+ (P)	-	-	5 - 200 ohm	5 - 200 ohm	5 - 200 ohm[1]
	- (N)	-	-	∞	∞	∞
	to (L1)	∞	5 - 200 ohm	-	-	-
	to (L2)	∞	5 - 200 ohm	-	-	-
	to (L3)	∞	5 - 200 ohm	-	-	-

External view

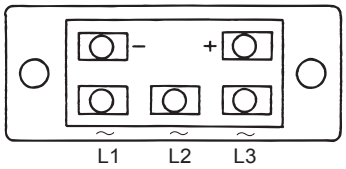

Internal circuit diagram

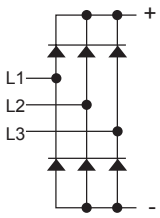

(7) Caution at replacement of inverter parts

1) Check for miswiring and loose connections.

Incorrect or loose wiring of such circuit components as IPM and diode stack may cause the IPM damage. Thoroughly check the wiring. Retighten all screws upon completion of all other work.

Connect the IPM control terminal carefully to the G/A board, as the terminal is very small.If the output wire from the IPM to the compressor is connected incorrectly, the compressor will be damaged. Perform wiring carefully in order of color shown in the wiring diagram below.

2) Coat the radiation surface of the IPM and diode stack evenly with the grease that is provided with the service parts.

Apply a thin layer of grease to the entire surface of the back of the IPM and diode stack, and screw the module securely into place.

Wipe off any grease that may get on the wiring terminal to avoid terminal contact failure.

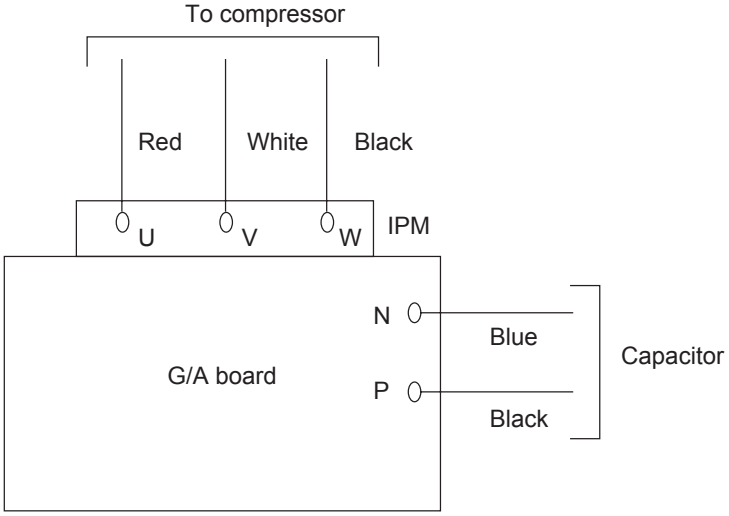

-9- Control Circuit

(1) Control power source function block

P72 - P144 models

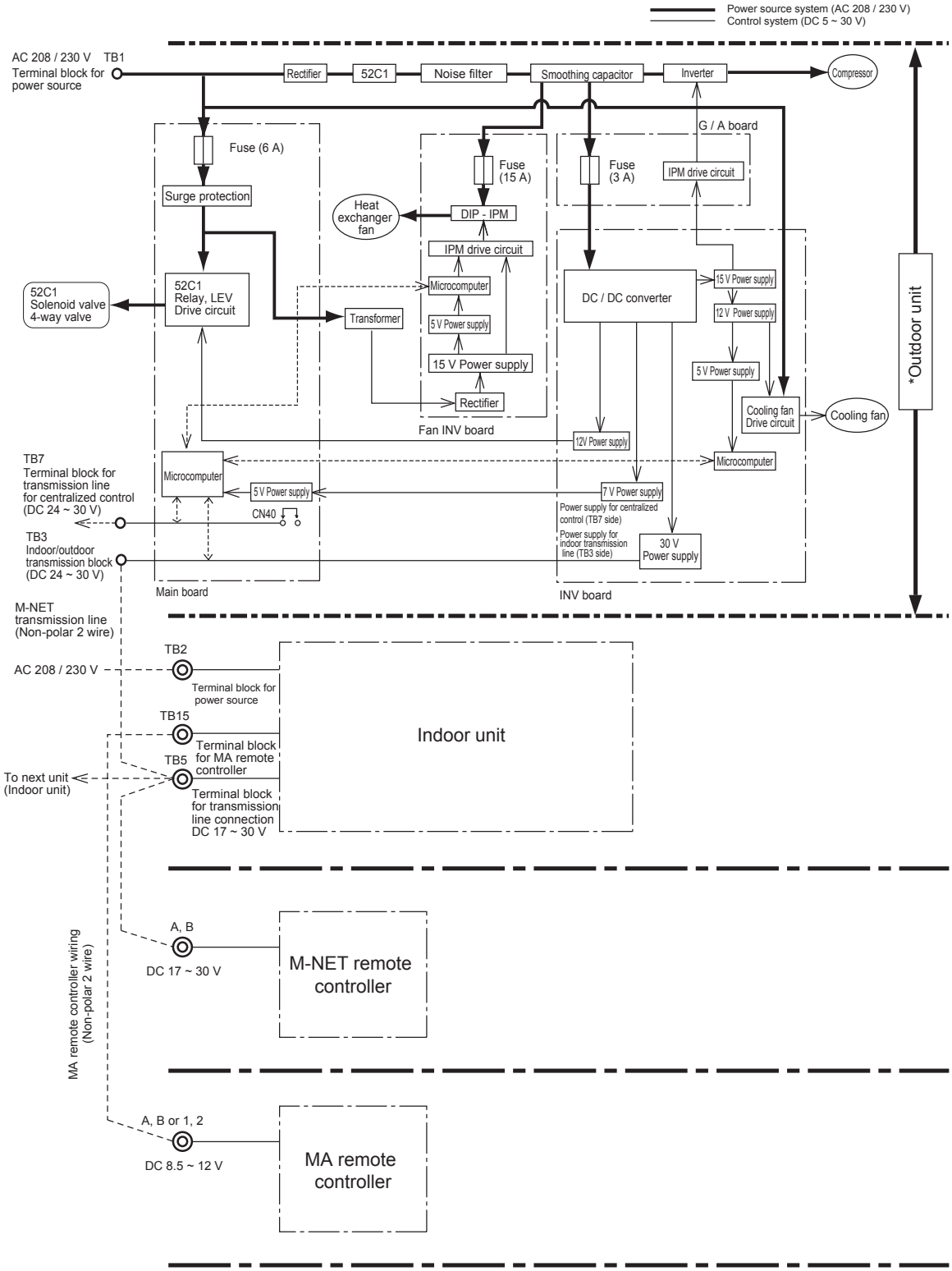

* MA remote controllers and M-NET remote controllers cannot be used together.

P168 - P234 models

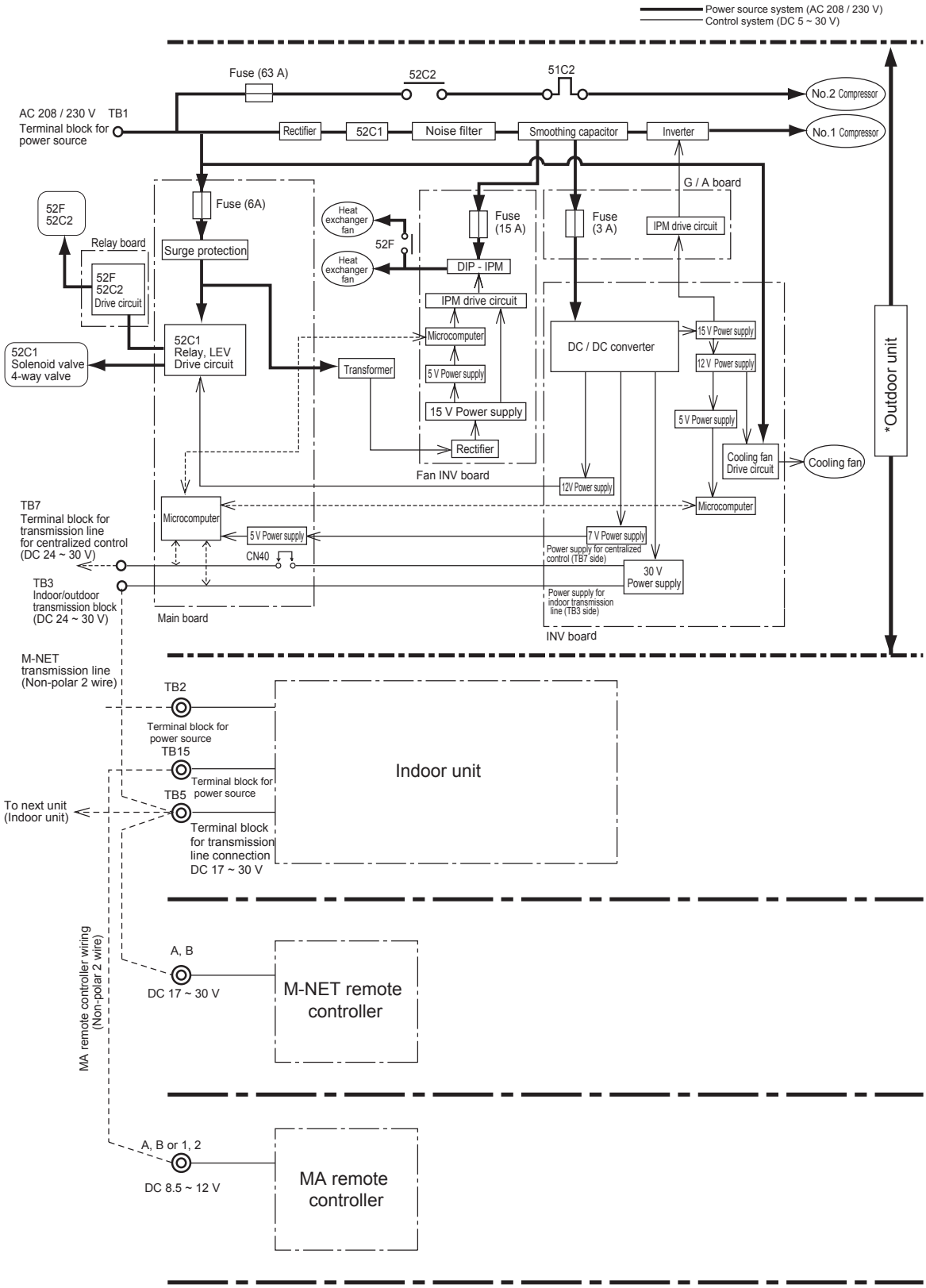

* MA remote controllers and M-NET remote controllers cannot be used together.

(2) Troubleshooting transmission power circuit of outdoor unit

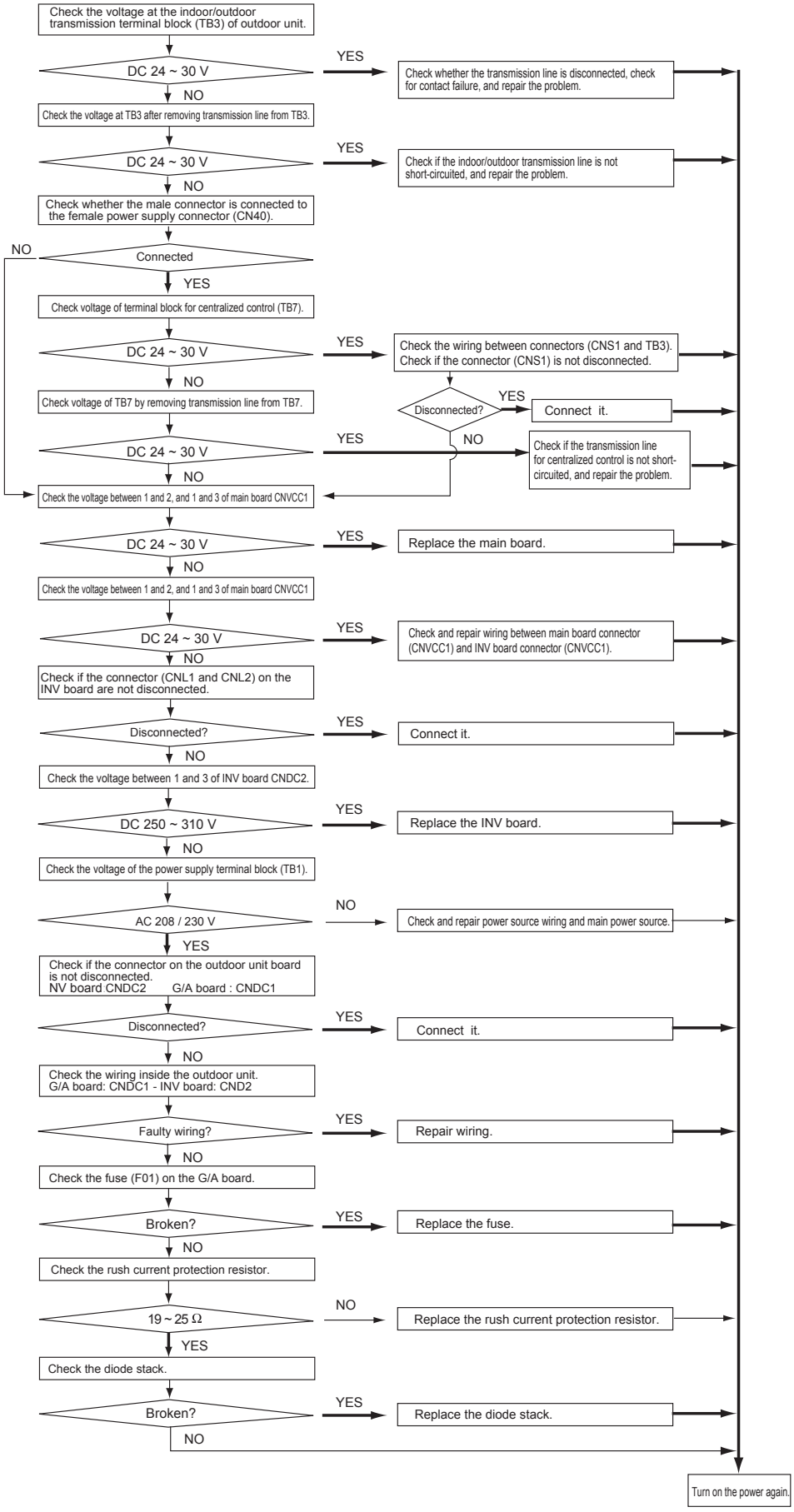

[5] Refrigerant Leak

1. Leak spot: In the case of extension pipe for indoor unit (Cooling season)

1) Mount a pressure gauge on the service check joint (CJ2) on the low-pressure side.
2) Stop all the indoor units, and close the liquid ball valve (BV2) inside the outdoor unit while the compressor is being stopped.
3) Stop all the indoor units; turn on SW3-6 on the outdoor unit main board while the compressor is being stopped.(Pump down mode will start, and all the indoor units will run in cooling test run mode.)
4) In the pump down mode (SW3-6 is ON), all the indoor units will automatically stop when the low pressure (LPS) reaches 0.382MPa [55psi] or less or 15 minutes have passed after the pump mode started. Stop all the indoor units and compressors when the pressure indicated by the pressure gauge, which is on the check joint (CJ2) for low-pressure service, reaches 0.284MPa [41psi] or 20 minutes pass after the pump down operation is started.
5) Close the gas ball valve (BV1) inside the outdoor unit.
6) Collect the refrigerant that remains in the extended pipe for the indoor unit. Do not discharge refrigerant into the atmosphere when it is collected.
7) Repair the leak.
8) After repairing the leak, vacuum the extension pipe and the indoor unit.
9) To adjust refrigerant amount and to check the composition of refrigerant, open the ball valves (BV1 and BV2) inside the outdoor unit and turn off SW3-6.

2. Leak spot: In the case of outdoor unit (Cooling season)

1) Run all the indoor units in the cooling test run mode.
   (i) To run the indoor unit in test run mode, turn SW3-2 from ON to OFF when SW3-1 on the outdoor MAIN board is ON.
   (ii) Change the setting of the remote controller for all the indoor units to the cooling mode.
   (iii) Check that all the indoor units are performing a cooling operation.

In case of PUHY series

2) Check the values of Tc and TH7.
   (To display the values on the LED screen, use the self-diagnosis switch (SW1) on the outdoor unit main board.)
   (i) When Tc-TH7 is 10K [18°F] or more : See the next item 4).
   (ii) When Tc-TH7 is less than 10K [18°F] : After the compressor stops, collect the refrigerant inside the system, repair the leak, perform evacuation, and recharge new refrigerant. (Leak spot: In the case of outdoor unit, handle in the same way as heating season.)

Tc self-diagnosis switch

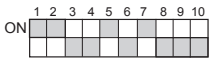

TH7 self-diagnosis switch

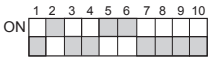

In case of PURY series

3) Check the values of SC16.
   (To display the values on the LED screen, use the self-diagnosis switch (SW1) on the outdoor unit main board.)
   (i) When SC16 is 10K [18°F] or more : See the next item 4).
   (ii) When SC16 is less than 10K [18°F] : After the compressor stops, collect the refrigerant inside the system, repair the leak, perform evacuation, and recharge new refrigerant. (Leak spot: In the case of outdoor unit, handle in the same way as heating season.)

SC16 self-diagnosis switch

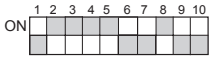

4) Stop all the indoor units, and stop the compressor.
   (i) To stop all the indoor units and the compressors, turn SW3-2 from ON to OFF when SW3-1 on the outdoor MAIN board is ON.
   (ii) Check that all the indoor units are being stopped.
5) Close the ball valves (BV1 and BV2).
6) To prevent the liquid seal, extract small amount of refrigerant from the check joint of the liquid ball valve (BV2), as the liquid seal may cause a malfunction of the unit.
7) Collect the refrigerant that remains inside the outdoor unit.Do not discharge refrigerant into air into the atmosphere when it is collected.
8) Repair the leak.
9) After repairing the leak, replace the dryer with the new one, and perform evacuation inside the outdoor unit.

10) To adjust refrigerant amount, open the ball valves (BV1 and BV2) inside the outdoor unit.
Note : When the power to the outdoor/indoor unit must be turned off to repair the leak after closing the ball valves specified in the item 5, turn the power off in approximately one hour after the outdoor/indoor units stop.
(i) When 30 minutes have passed after the item 4 above, the indoor unit lev turns from fully closed to slightly open to prevent the refrigerant seal.
(ii) Therefore, if the power source is turned off within 30 minutes, the lev remains fully closed and the refrigerant remains sealed.
When only the power for the indoor unit is turned off, the indoor unit LEV turns from faintly open to fully closed.

3. Leak spot: In the case of extension pipe for indoor unit (Heating season)

1) Run all the indoor units in heating test run mode.
(i) To run the indoor unit in test run mode, turn SW3-2 from ON to OFF when SW3-1 on the outdoor MAIN board is ON.
(ii) Change the setting of the remote controller for all the indoor units to the heating mode.
(iii) Check that all the indoor units are performing a heating operation.

2) Stop all the indoor units, and stop the compressor.
(i) To stop all the indoor units and the compressors, turn SW3-2 from ON to OFF when SW3-1 on the outdoor MAIN board is ON.
(ii) Check that all the indoor units are stopped.

3) Close the ball valves (BV1 and BV2).
4) Collect the refrigerant that remains inside the outdoor unit. Do not discharge refrigerant into air into the atmosphere when it is collected.
5) Repair the leak.
6) After repairing the leak, perform evacuation of the extension pipe for the indoor unit, and open the ball valves (BV1 and BV2) to adjust refrigerant.

4. Leak spot: In the case of outdoor unit (Heating season)

1) Collect the refrigerant in the entire system (outdoor unit, extended pipe and indoor unit).Do not discharge refrigerant into the atmosphere when it is collected.
2) Repair the leak.
3) After repairing the leak, replace the dryer with the new one, and perform evacuation of the entire system, and calculate the standard amount of refrigerant to be added (for outdoor unit, extended pipe and indoor unit), and charge the refrigerant.
Refer to "8 [4] 3. "

[6] Compressor Replacement Instructions (only P168-P234 types)

Follow the instructions below when replacing the compressor.

When replacing the compressor No.1 (inverter drive), determine if the compressor is malfunctioning or the inverter is malfunctioning.
When only one compressor is malfunctioning, operate the compressor for approximately an hour in emergency operation mode before the replacement, check the items below, and replace the compressor after examining whether the return oil circuit is working properly or not.

Refer to the diagram on the right for the temperature of each section.

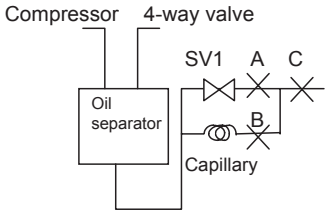

<When normal>

1) Temperature of A = Temperature of C,
and Temperature of A > Outdoor temperature + 10deg°C [18deg°F]
2) Temperature of B = Temperature of C,
and Temperature of B > Outdoor temperature + 10deg°C [18deg°F]

<When abnormal>

When 1) is abnormal (out of range)
Return oil failure due to SV1 circuit failure
-> Replace SV1 circuit.
When 2) is abnormal (out of range)
Return oil failure due to capillary blockage
-> Replace the capillary

1) Check that the main power is OFF.
   When replacing the compressor due to megger failure and when the megger is 1M ohm or more, megger drop is likely due to the liquified refrigerant entering and accumulating in the compressor. Turn the power off after powering the crankcase heater at least 12 hours, and apply megger again.
2) Remove the fin guard, the front panel and the front partition plate on the right (as you face the front).
3) Collect the refrigerant from the service check joints on both high and low-pressure sides.
   When collecting refrigerant from the accumulator, perform proper work with the reference of refrigerant collecting method from the accumulator.
4) Collect the oil from the drain oil pipe that is located on the oil balance pipe.
   Note:
   - When collecting the oil, prepare an approximately 10-liter container.
   - Keep collecting oil until the oil in the drain oil plug clears up.
   - Keep track of the amount of collected oil, as the same amount of oil will be added.
   - Do not splash oil.Do not leave the refrigerant circuit open for a long time, as the oil rapidly absorbs moisture.
   - The collected oil cannot be reused.
5) After draining oil from the refrigerant and the drain oil plug, remove the metal fitting-1 or the flare nuts (2 places) that connect the compressor and the oil balance pipe, and bend the oil balance pipe so as not to apply an excess force.
6) Close the oil balance pipe attachment point with a cap to prevent the oil from leaking.
7) Remove the compressor terminal cover, and remove the power supply wiring.
8) Remove the discharge temperature thermistor and the sound-proof material that is wrapped around the compressor.
9) Remove the crankcase heater.
10) Heat the brazed part of the discharge pipe and the suction pipe, and remove the pipes.
11) Remove the compressor fixing nuts and the metal fitting-2 (3 places on compressor-2).
12) Replace the compressor with the service compressor.
13) Braze the discharge pipe and the suction pipe.
14) Attach the oil balance pipe to both compressors.Attach the oil balance pipe to both compressors.After replacing the dryer, do not leave the refrigerant circuit open for long time.
    Note:
    When replacing the compressor and when the equal oil pipe is damaged or irreparably deformed, after replacing the compressor, heat the junction of the equal oil pipe, remove the equal oil pipe, and braze the service equal oil pipe.
15) Close the ball valves in the outdoor unit (both on the liquid and the gas side), and pressurize up to 4.15MPa [601si] with nitrogen from the check joints for high and low-pressure service.
16) After confirming the airtightness, release the nitrogen gas.
17) Open the ball valves in the outdoor unit (both on the liquid and the gas side), and perform vacuuming.
18) While vacuuming, add the same amount of oil that is collected from the drain oil plug on the oil balance pipe in the procedure 4).
    Note:
    - The oil to be added must be MEL32 made by Nisseki Mitsubishi.When adding oil, the oil must not absorb moisture, and do not use the oil that is over a year old.
    - Do not draw out the oil in the compressor when returning the compressor to find the cause of compressor malfunction.
19) Attach the crankcase heater.
    Note: Attach the appropriate crankcase heater to the appropriate compressor.
20) Attach the soundproof material to the compressor.
21) Attach the discharge temperature thermistor, and attach the insulation.
22) Attach the power source wire to the terminal on the compressor.
23) After vacuuming, calculate the amount of added refrigerant at factory shipment and the amount of added refrigerant on site, and charge the system.
24) After reconfirming the power source-wiring phase, apply a megger, attach the terminal cover, turn on the main power, and check whether the crankcase heater is powered.
25) Check that the ball valves (both on the liquid and the gas side) are open.
26) Operate all the indoor units, and check whether they run properly.
27) If there is something that needs to be improved in the installation or the usage, explain that to the customers.

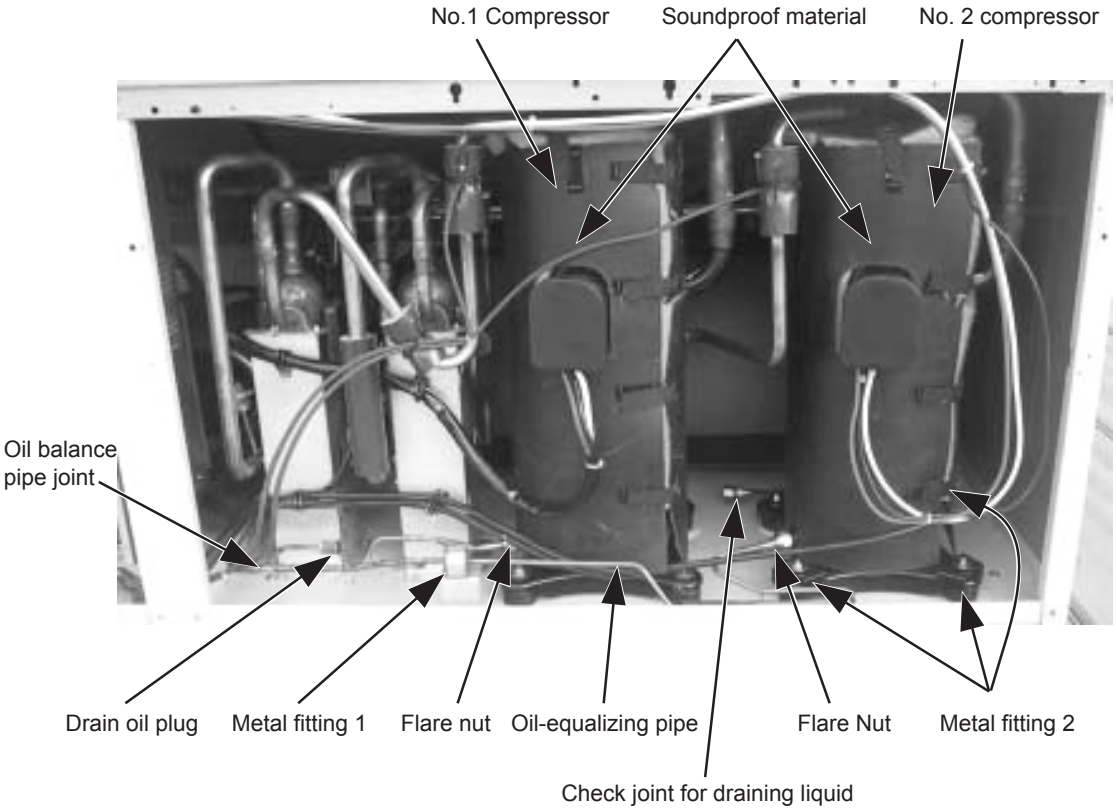

[7] Collecting the Cooling Liquid from the Accumulator (Only P168-P234 types)

1) Perform evacuation inside the recovery cylinder.
2) Connect the check joint for collecting liquid that is derived from the accumulator and the recovery cylinder with a connection pipe (or hose that has predetermined withstand pressure).
   Note: When the check joint and the connecting pipe (hose) are connected, extremely low-temperature oil may flow out. Use some protective clothing, such as leather gloves.
3) Open the valves of the recovery cylinder while the recovery cylinder is being weighed, and collect the liquid inside the accumulator into the cylinder.
   Note: Allow some capacity when collecting the refrigerant so that the recovery cylinder will not overflow. Use several cylinders when collecting large amount of refrigerant.
4) After collecting the refrigerant, close the valve of the recovery cylinder, and remove the connecting pipe (hose).
   Note: When the check joint and the connecting pipe (hose) are connected, extremely low-temperature oil may flow out. Use some protective equipment, such as leather gloves.
5) Charge 3-liter oil from the check joint on the accumulator during evacuation.

[8] Servicing the BC controller

(1) Service panel

*Special care must be taken when replacing heavy parts.

Work procedure	Explanatory figure
1. Remove 2 lock nuts on the control box, loosen 2 lock nuts, and remove the control box. 2. Remove 4 fixing screws on the service panel, and remove the service panel. 3. Remove 9 machine screws on the ceiling panel, and remove the ceiling panel.	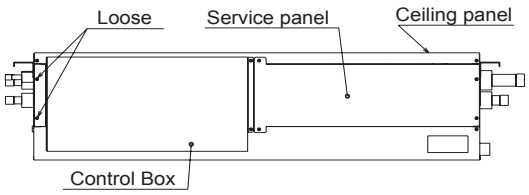

(2) Control box

Work procedure	Explanatory figure
1. To check the inside of the control box, remove 2 lock nuts on the control box cover. (1) Check the terminal connection of the power wire or of the transmission line. (2) Check the transformer. (3) Check the address switch. 2. When the control board is replaced, the followings must be noted. (1) Check that the board type is NU-G,NU-GA, or NU-GB. (2) Check that the wire or the connector is not incorrectly connected, not disconnected or not loose. Note: It is not required to remove 2 fixing screws on the control box when checking the inside.	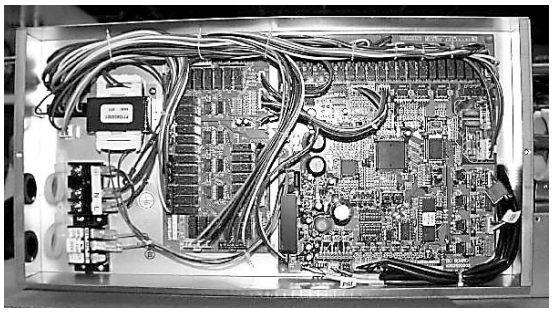 CMB-1016NU-G, 1016NU-GA

(3) Thermistor (liquid pipe/gas pipe temperature detection)

*Special care must be taken when replacing heavy parts.

Work procedure	Explanatory figure
1. Remove the service panel. (1) For TH11, TH12, and TH15, refer to (1)-1.2. (2) For TH16, refer to (1)-1.2.3. 2. Remove the lead wire of the piping sensor from the control board. (1) TH11,TH12 (CN10) (2) TH15,TH16 (CN11) 3. Pull out the temperature sensor from the temperature sensor housing, and replace the temperature sensor with the new one. 4. Connect the lead wire of the temperature sensor securely on the control board.	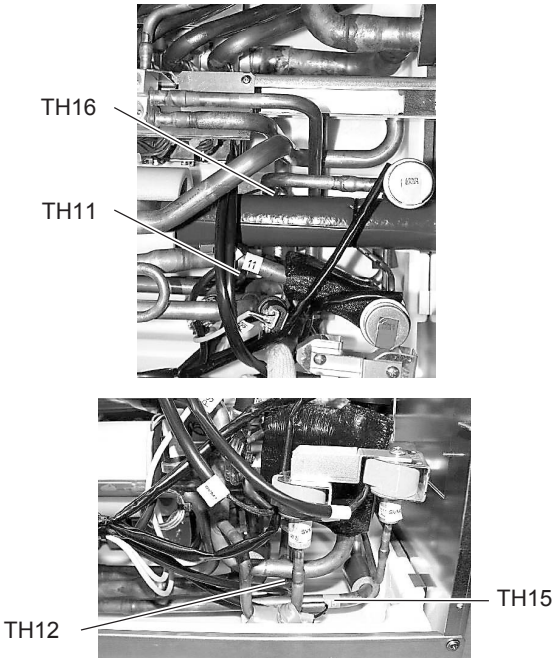 CMB-1016NU-GA

(4) Pressure sensor

Work procedure	Explanatory figure
1. Remove the service panel. (1) For the pressure sensors PS1 and PS3, refer to (1)-1.2. 2. Remove the pressure sensor connector in trouble from the control board, and insulate the connector. (1) Liquid-side pressure sensor (CNP1) (2) Intermediate-part pressure sensor (CNP3) 3. Attach a new pressure sensor to the place which is shown in the figure, and insert the connector to the control board. Note: When gas leaks from the pressure sensor, repair the leak, and follow the instructions above if required.	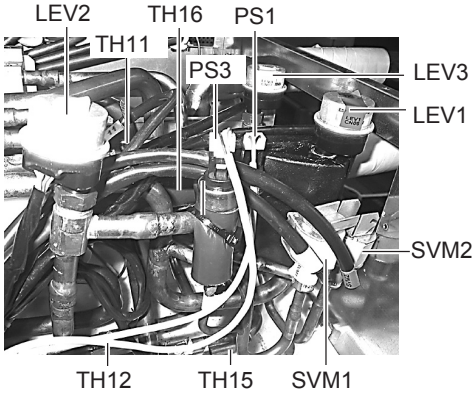 *For NU-G-type, there is no SVM2. CMB-1016NU-GA

(5) LEV

Work procedure	Explanatory figure
1. Remove the service panel.(Refer to (1)-1.2.3.) 2. Replace the LEV in trouble. Note: Secure enough service space in the ceiling for welding operation, and conduct the work carefully.If required, dismount the unit from the ceiling, and conduct the work.	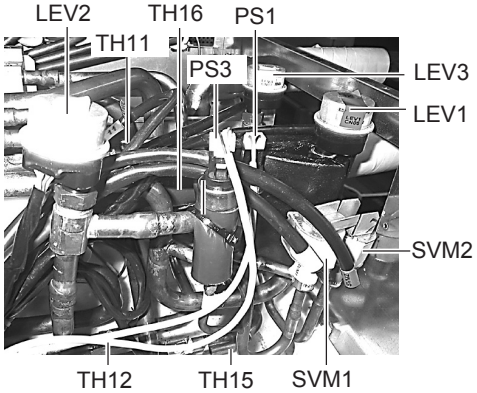 *For NU-G-type, there is no SVM2. CMB-1016NU-GA

(6) Solenoid valve

*Special care must be taken when replacing heavy parts.

Work procedure	Explanatory figure
1. Remove the service panel.(Refer to (1)-1.2.3.) 2. Remove the connector of the solenoid valve in trouble. 3. Remove the solenoid valve coil. (1) For the solenoid valve coil of SVA, SVB, or SVM1, 2, can be serviced from the inspection door is possible. For SVC, however, remove the rear panel (4 machine screws) to replace the coil if enough service space can be secured at the rear.(Only NU-GA type for SVM 2)	Double-pipe heat exchanger 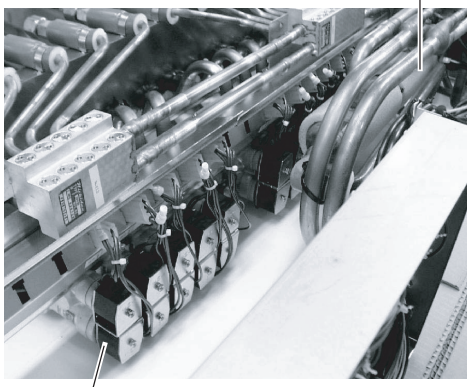 CMB-1016NU-G Solenoid valve 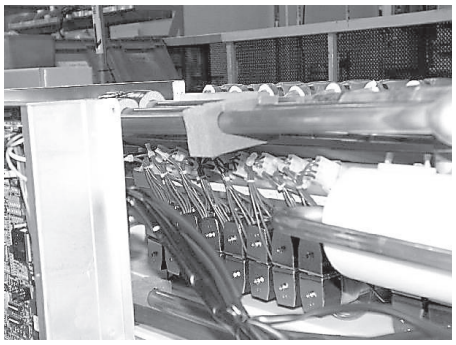 CMB-1016NU-GA

Ⅹ LED monitor display on the outdoor unit board

[1] How to read the LED on the service monitor 361

[1] How to read the LED on the service monitor

1. How to read the LED

By setting the DIP SW 1-1 through 1-10 (Switch number 10 is represented by 0), the operating condition of the unit can be monitored on the service monitor. (Refer to the table on the following pages for DIP SW settings.) The service monitor uses 4-digit 7-segment LED to display numerical values and other types of information.

7SEG LED

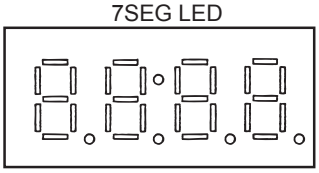

Pressure and temperature are examples of numerical values, and operating conditions and the on-off status of solenoid valve are examples of flag display.

1) Display of numerical values

Example: When the pressure data sensor reads 18.8kg/cm^2 (Item No. 72)

- The unit of pressure is in kg/cm^2
- Use the following conversion formula to convert the displayed value into a value in SI unit.
  Value in SI unit (MPa) = Displayed value (kg/cm^2) x 0.098
- Use the following conversion formula to convert the displayed value into a value in SI unit.
  Value in SI unit (MPa) = Displayed value (kg/cm^2) x 0.098
- By setting DIP SW5-3 on the outdoor unit controller board to ON, values can be displayed in English measurement units.

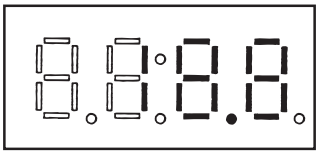

2) Flag display (Each set of 2 lines in vertical alignment indicates a flag.)

Example: 3-minutes restart mode (Item No. 14)

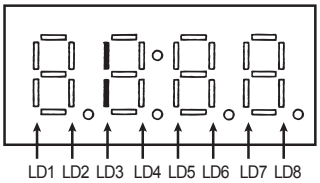

2. LED display at initial setting

From power on until the completion of initial settings, the following information will be displayed on the monitor screen. (Displays No. 1 through No. 4 in order repeatedly.)

No	SW1	Item	Display	Remarks
1	N/A	Software version	8888	[0103] : Version 1.03
2		Refrigerant type	8888	[410] : R410A
3		Model and capacity	8888	[H-20] : PUHY 20HP [r-08] : PURY 8HP
4		M-NET address	8888	[51] : Address 51

After the initial settings have been completed, the information on these items can be checked by making the switch setting that corresponds to No. 517 in the LED display table.

3. Time data storage function

The outdoor unit has a simple clock function that enables the unit to calculate the current time with an internal timer by receiving the time set by the system controller, such as G50.
If an error (including a preliminary error) occurs, the error history data and the error detection time are stored into the service memory.
The error detection time stored in the service memory and the current time can be seen on the service LEDs.

Notes:

1) Use the time displayed on the service LED as a reference.
2) The date and the time are set to "00" by default. If a system controller that sets the time, such as G50 is not connected, the elapsed time and days since the first power on will be displayed.
   If the time set on a system controller is received, the count will start from the set date and the time.
3) The time is not updated while the power of the indoor unit is turned off. When the power is turned off and then on again, the count will resume from the time before the power was turned off. Thus, the time that differs the actual time will be displayed. (This also applies when a power failure occurs.)
   The system controller, such as G50, adjusts the time once a day. When the system controller is connected, the time will be automatically updated to the correct current time after the time set by the system controller is received. (The data stored into the memory before the set time is received will not be updated.)

(1) Reading the time data:

1) Time display
   Example: 12 past 9

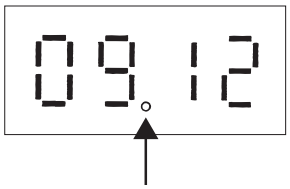

* Disappears if the time data is deviated due to a power failure, or if a system controller that sets the time is not connected.

2) Date display
   ♦When the main controller that can set the time is connected
   Example: May 10, 2003

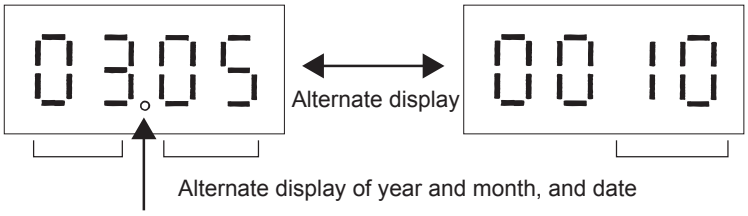

Alternate display of year and month, and date

* Appears between the year and the month, and nothing appears when the date is displayed.

♦When the main controller that can set the time is not connected
Example: 52 days after power was turned on

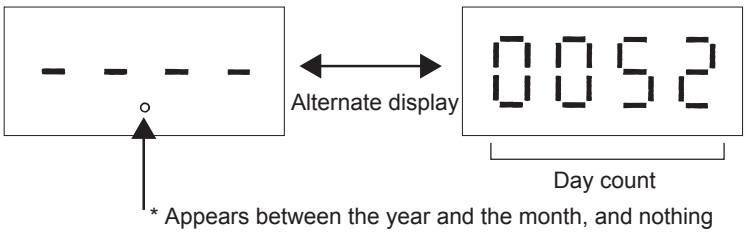

Day count

* Appears between the year and the month, and nothing appears when the date is displayed.

4. Table of LED Codes

LED monitor display

	No	SW	Item	Display								Remarks
		1234567890		LD1	LD2	LD3	LD4	LD5	LD6	LD7	LD8	
Current data	0	0000000000	Relay output display 1 Lighting	Comp in operation	Comp 1 in operation	Comp 2 in operation		52C1	52C2		Always lit	LD8 stays lit at all times while the power to the microcomputer is on.
			Check (error) display 1 OC error	0000 to 9999 (Address and error codes highlighted)								
	1	1000000000	Check (error) display 2 OC error	0000 to 9999 (Address and error codes highlighted)								Display of the latest preliminary error If no preliminary errors are detected, "----" appears on the display.
	2	0100000000	Check (error) display 3 (Including IC and BC)	0000 to 9999 (Address and error codes highlighted)								If no errors are detected, "----" appears on the display.
	3	1100000000	Relay output display 2	21S4a	21S4b		CH11	CH12				Items marked with * are only applicable to the PURY series.
	4	0010000000	Relay output display 3	SV1	*SV2	SV3	*SV4a	*SV4b	*SV4c			
	5	1010000000	Relay output display 4	*SV5a	SV5b			*SV4d		52F		
	6	0110000000										
	7	1110000000	Special control	Retry operation	Emergency operation							
	8	0001000000										
	9	1001000000	Communication demand capacity	0000 to 9999								If not demanded controlled, "----" [%] appears on the display.
	10	0101000000	Contact point demand capacity	0000 to 9999								If not demanded controlled, "----" [%] appears on the display.
	11	1101000000	External signal (Open input contact point)	Contact point demand	Night mode	Snow sensor	Cooling-heating change over (Cooling)	Cooling-heating change over (Heating)				
	12	0011000000										
	13	1011000000										
	14	0111000000	Outdoor unit operation status	BC operation command	Warm up mode	3-minutes restart mode	Compressor in operation	Preliminary error	Error	3-minutes restart after instantaneous power failure	Preliminary low pressure error	Items marked with * are only applicable to the PURY series.
	15	1111000000										

	No	SW	Item	Display								Remarks
		1234567890		LD1	LD2	LD3	LD4	LD5	LD6	LD7	LD8	
Current data	16	0000100000	Indoor unit check	Unit No. 1	Unit No. 2	Unit No. 3	Unit No. 4	Unit No. 5	Unit No. 6	Unit No. 7	Unit No. 8	The lamp that corresponds to the unit that came to an abnormal stop lights. The lamp goes off when the error is reset. Each unit that comes to an abnormal unit will be given a sequential number in ascending order starting with 1.
	17	1000100000		Unit No. 9	Unit No. 10	Unit No. 11	Unit No. 12	Unit No. 13	Unit No. 14	Unit No. 15	Unit No. 16	
	18	0100100000		Unit No. 17	Unit No. 18	Unit No. 19	Unit No. 20	Unit No. 21	Unit No. 22	Unit No. 23	Unit No. 24	
	19	1100100000		Unit No. 25	Unit No. 26	Unit No. 27	Unit No. 28	Unit No. 29	Unit No. 30	Unit No. 31	Unit No. 32	
	20	0010100000										
	21	1010100000										
	22	0110100000										
	23	1110100000	Indoor unit Operation mode	Unit No. 1	Unit No. 2	Unit No. 3	Unit No. 4	Unit No. 5	Unit No. 6	Unit No. 7	Unit No. 8	Lit during cooling Lit during heating Unlit while the unit is stopped or in the fan mode
	24	0001100000		Unit No. 9	Unit No. 10	Unit No. 11	Unit No. 12	Unit No. 13	Unit No. 14	Unit No. 15	Unit No. 16	
	25	1001100000	Indoor unit Operation mode	Unit No. 17	Unit No. 18	Unit No. 19	Unit No. 20	Unit No. 21	Unit No. 22	Unit No. 23	Unit No. 24	
	26	0101100000		Unit No. 25	Unit No. 26	Unit No. 27	Unit No. 28	Unit No. 29	Unit No. 30	Unit No. 31	Unit No. 32	
	27	1101100000										
	28	0011100000										
	29	1011100000										
	30	0111100000	Indoor unit thermostat	Unit No. 1	Unit No. 2	Unit No. 3	Unit No. 4	Unit No. 5	Unit No. 6	Unit No. 7	Unit No. 8	Lit when thermostat is on Unlit when thermostat is off
	31	1111100000		Unit No. 9	Unit No. 10	Unit No. 11	Unit No. 12	Unit No. 13	Unit No. 14	Unit No. 15	Unit No. 16	
	32	0000010000		Unit No. 17	Unit No. 18	Unit No. 19	Unit No. 20	Unit No. 21	Unit No. 22	Unit No. 23	Unit No. 24	
	33	1000010000		Unit No. 25	Unit No. 26	Unit No. 27	Unit No. 28	Unit No. 29	Unit No. 30	Unit No. 31	Unit No. 32	
	34	0100010000										
	35	1100010000										
	36	0010010000										
	37	1010010000	BC all indoor units Operation mode	*Cooling only ON	*Cooling only OFF	*Heating only ON	*Heating only OFF	*Mixed mode operation ON	*Mixed mode operation OFF	*Ventilation	*Stop	Items marked with * are only applicable to the PURY series.
	38	0110010000										
	39	1110010000	Outdoor unit Operation mode	Permissible stop	Standby	Cooling only	*Cooling main	Heating only	*Heating main			
	40	0001010000										
	41	1001010000										
	42	0101010000	Outdoor unit control mode	Stop	Thermo OFF	Abnormal stop	Scheduled control	Initial start up	Defrost	Oil balance	Low frequency oil recovery	
	43	1101010000		Warm up mode	Refrigerant recovery							

	No	SW	Item	Display								Remarks
		1234567890		LD1	LD2	LD3	LD4	LD5	LD6	LD7	LD8	
Current data	44	0011010000										
	45	1011010000	TH11	-99.9 to 999.9								The unit is [°C] or [°F]*1
	46	0111010000	TH12	-99.9 to 999.9								
	47	1111010000										
	48	0000110000	TH5	-99.9 to 999.9								
	49	1000110000	TH6	-99.9 to 999.9								
	50	0100110000	TH7	-99.9 to 999.9								
	51	1100110000	*TH8	-99.9 to 999.9								Items marked with * are only applicable to the PUHY series.
	52	0010110000										
	53	1010110000										
	54	0110110000										
	55	1110110000										
	56	0001110000										
	57	1001110000										
	58	0101110000										
	59	1101110000										
	60	0011110000	THHS1	-99.9 to 999.9								The unit is [°C] or [°F]*1
	61	1011110000										
	62	0111110000										
	63	1111110000	THHS5	-99.9 to 999.9								
	64	0000001000										
	65	1000001000										
	66	0100001000										
	67	1100001000										
	68	0010001000										
	69	1010001000										
	70	0110001000										
	71	1110001000										
	72	0001001000	High-pressure sensor data	-99.9 to 999.9								The unit is [kgf/cm^2] or [psi]*1
	73	1001001000	Low-pressure sensor data	-99.9 to 999.9								
	74	0101001000										
	75	1101001000										
	76	0011001000										
	77	1011001000										

*1 Enabled when DIP SW5-3 on the outdoor unit controller board is set to ON.

	No	SW	Item	Display								Remarks
		1234567890		LD1	LD2	LD3	LD4	LD5	LD6	LD7	LD8	
Current data	78	0111001000	∑ × Qj (∑ × Qjc + ∑ × Qjh)	0000 to 9999								
	79	1111001000	∑ × Qjc	0000 to 9999								
	80	0000101000	∑ × Qjh	0000 to 9999								
	81	1000101000	Target Tc	-99.9 to 999.9								The unit is [°C] or [°F]*1
	82	0100101000	Target Te	-99.9 to 999.9								
	83	1100101000	Tc	-99.9 to 999.9								
	84	0010101000	Te	-99.9 to 999.9								
	85	1010101000										
	86	0110101000										
	87	1110101000	All temporary frequencies	0000 to 9999								Control data [Hz]
	88	0001101000	Control frequency of COMP 1	0000 to 9999								
	89	0001101000	Control frequency of COMP 2	0000 to 9999								
	90	0101101000										
	91	1101101000	Operation frequency of COMP 1	0000 to 9999								Operation frequency of compressor [Hz]*2
	92	0011101000										
	93	1011101000										
	94	0111101000	AK1	0000 to 9999								Control data
	95	1111101000										
	96	0000011000										
	97	1000011000	FAN1	0000 to 9999								Fan inverter output [%]
	98	0100011000										
	99	1100011000										
	100	0010011000	Number of fans in operation	0000 to 9999								
	101	1010011000										
	102	0110011000										
	103	1110011000										
	104	0001011000	*LEV1	0 to 480								Items marked with * are only applicable to the PUHY series. Outdoor LEV opening (Fully open: 480)
	105	1001011000										
	106	0101011000										
	107	1101011000										

*1 Enabled when DIP SW5-3 on the outdoor unit controller board is set to ON.
*2. Output frequency of the inverter depends on the type of compressor and equals the integer multiples (X1, X2 etc.) of the operating frequency of the compressor.

	No	SW	Item	Display								Remarks
		1234567890		LD1	LD2	LD3	LD4	LD5	LD6	LD7	LD8	
Current data	108	0011011000	COMP 1 operation current (DC)	-99.9 to 999.9								Peak value [A]
	109	1011011000										
	110	0111011000										
	111	1111011000	COMP 1 bus voltage	0000 to 9999								The unit is [V]
	112	0000111000										
	113	1000111000										
	114	0100111000										
	115	1100111000										
	116	0010111000										
	117	1010111000	COMP1 Operation time Upper 4 digits	0000 to 9999								The unit is [h]
	118	0110111000	COMP1 Operation time Lower 4 digits	0000 to 9999								
	119	1110111000	COMP2 Operation time Upper 4 digits	0000 to 9999								
	120	0001111000	COMP2 Operation time Lower 4 digits	0000 to 9999								
	121	1001111000										
	122	0101111000										
	123	1101111000	COMP 1 number of start-stop events Upper 4 digits	0000 to 9999								Count-up at start-up The unit is [Time]
	124	0011111000	COMP 1 number of start-stop events Lower 4 digits	0000 to 9999								
	125	1011111000	COMP 2 number of start-stop events Upper 4 digits	0000 to 9999								
	126	0111111000	COMP 2 number of start-stop events Lower 4 digits	0000 to 9999								
	127	1111111000										
	128	0000000100										

	No	SW	Item	Display								Remarks
		1234567890		LD1	LD2	LD3	LD4	LD5	LD6	LD7	LD8	
Current data	129	1000000100										
	130	0100000100										
	131	1100000100										
	132	0010000100	Relay output display BC (Main controller or standard controller)	SVM1	SVM2							Items from No. 132 to No. 167 are applicable to the PURY series.
	133	1010000100		SVA1	SVB1	SVC1	SVA2	SVB2	SVC2			
	134	0110000100		SVA3	SVB3	SVC3	SVA4	SVB4	SVC4			
	135	1110000100		SVA5	SVB5	SVC5	SVA6	SVB6	SVC6			
	136	0001000100		SVA7	SVB7	SVC7	SVA8	SVB8	SVC8			
	137	1001000100		SVA9	SVB9	SVC9	SVA 10	SVB 10	SVC 10			
	138	0101000100		SVA 11	SVB 11	SVC 11	SVA 12	SVB 12	SVC 12			
	139	1101000100		SVA 13	SVB 13	SVC 13	SVA 14	SVB 14	SVC 14			
	140	0011000100		SVA 15	SVB 15	SVC 15	SVA 16	SVB 16	SVC 16			
	141	1011000100	Relay output display BC (Sub controller 1)	SVA1	SVB1	SVC1	SVA2	SVB2	SVC2			
	142	0111000100		SVA3	SVB3	SVC3	SVA4	SVB4	SVC4			
	143	1111000100		SVA5	SVB5	SVC5	SVA6	SVB6	SVC6			
	144	0000100100		SVA7	SVB7	SVC7	SVA8	SVB8	SVC8			
	145	1000100100	Relay output display BC (Sub controller 2)	SVA1	SVB1	SVC1	SVA2	SVB2	SVC2			
	146	0100100100		SVA3	SVB3	SVC3	SVA4	SVB4	SVC4			
	147	1100100100		SVA5	SVB5	SVC5	SVA6	SVB6	SVC6			
	148	0010100100		SVA7	SVB7	SVC7	SVA8	SVB8	SVC8			
	149	1010100100	BC controller (Main controller or standard controller) TH11	-99.9 to 999.9								The unit is [°C] or [°F]*1
	150	0110100100	BC controller (Main controller or standard controller) TH12	-99.9 to 999.9								
	151	1110100100	BC controller (Main controller or standard controller) TH15	-99.9 to 999.9								
	152	0001100100	BC controller (Main controller or standard controller) TH16	-99.9 to 999.9								

*1 Enabled when DIP SW5-3 on the outdoor unit controller board is set to ON.

	No	SW	Item	Display								Remarks
		1234567890		LD1	LD2	LD3	LD4	LD5	LD6	LD7	LD8	
Current data	153	1001100100	BC controller (Main controller or standard controller) 63HS1	-99.9 to 999.9								The unit is [kgf/cm^2] or [psi]*1
	154	0101100100	BC controller (Main controller or standard controller) 63HS3	-99.9 to 999.9								
	155	1101100100	BC controller (Main controller or standard controller) SC11	-99.9 to 999.9								The unit is [deg°C] or [deg°F] *1
	156	0011100100	BC controller (Main controller or standard controller) SH12	-99.9 to 999.9								
	157	1011100100	BC controller (Main controller or standard controller) SH13	-99.9 to 999.9								
	158	0111100100	BC controller (Main controller or standard controller) SC16	-99.9 to 999.9								
	159	1111100100	BC controller (Main controller or standard controller) LEV1	0000 to 2000								LEV 1 opening (Fully open: 2000)
	160	0000010100	BC controller (Main controller or standard controller) LEV3	0000 to 2000								LEV 3 opening (Fully open: 2000)
	161	1000010100	BC controller (Sub controller 1) TH22	-99.9 to 999.9								The unit is [°C] or [°F]*1
	162	0100010100	BC controller (Sub controller 1) TH25	-99.9 to 999.9								
	163	1100010100	BC controller (Sub controller 1) LEV3a	0000 to 2000								LEV 3a opening (Fully open: 2000)

*1 Enabled when DIP SW5-3 on the outdoor unit controller board is set to ON.

	No	SW	Item	Display								Remarks
		1234567890		LD1	LD2	LD3	LD4	LD5	LD6	LD7	LD8	
Current data	164	0010010100	BC controller (Sub controller 2) TH22	-99.9 to 999.9								The unit is [°C] or [°F]*1
	165	1010010100	BC controller (Sub controller 2) TH25	-99.9 to 999.9								
	166	0110010100	BC controller (Sub controller 2) LEV3a	0000 to 2000								LEV 3a opening (Fully open: 2000)
	167	1110010100	BC controller (Main controller or standard controller) LEV2	0000 to 2000								LEV 2 opening (Fully open: 2000)
	168	0001010100										
	169	1001010100										
	170	0101010100										
	171	1101010100										
	172	0011010100										
	173	1011010100										
	174	0111010100										
	175	1111010100										
	176	0000110100										
	177	1000110100										
Error history	178	0100110100	Error history 1	0000 to 9999								Address and error codes highlighted If no errors are detected, "---- " appears on the display.
	179	1100110100	Error details of inverter	Error details of inverter (0001-0120)								
	180	0010110100	Error history 2	0000 to 9999								
	181	1010110100	Error details of inverter	Error details of inverter (0001-0120)								
	182	0110110100	Error history 3	0000 to 9999								
	183	1110110100	Error details of inverter	Error details of inverter (0001-0120)								
	184	0001110100	Error history 4	0000 to 9999								
	185	1001110100	Error details of inverter	Error details of inverter (0001-0120)								
	186	0101110100	Error history 5	0000 to 9999								
	187	1101110100	Error details of inverter	Error details of inverter (0001-0120)								
	188	0011110100	Error history 6	0000 to 9999								
	189	1011110100	Error details of inverter	Error details of inverter (0001-0120)								

*1 Enabled when DIP SW5-3 on the outdoor unit controller board is set to ON.

	No	SW	Item	Display								Remarks
		1234567890		LD1	LD2	LD3	LD4	LD5	LD6	LD7	LD8	
Error history	190	0111110100	Error history 7	0000 to 9999								Address and error codes highlighted If no errors are detected, "---- " appears on the display.
	191	1111110100	Error details of inverter	Error details of inverter (0001-0120)								
	192	0000001100	Error history 8	0000 to 9999								
	193	1000001100	Error details of inverter	Error details of inverter (0001-0120)								
	194	0100001100	Error history 9	0000 to 9999								
	195	1100001100	Error details of inverter	Error details of inverter (0001-0120)								
	196	0010001100	Error history 10	0000 to 9999								
	197	1010001100	Error details of inverter	Error details of inverter (0001-0120)								
	198	0110001100	Error history of inverter (At the time of last data backup before error)	0000 to 9999								
	199	1110001100	Error details of inverter	Error details of inverter (0001-0120)								
	200	0001001100										
Data before error	201	1001001100	Outdoor unit operation status	*BC operation command	Warm up mode	3-minutes restart mode	Compressor in operation	Preliminary error	Error	3-minutes restart after instantaneous power failure	Preliminary low pressure error	Items marked with * are only applicable to the PURY series. No. 201 through No. 299 show data to be collected immediately before abnormal stop or preliminary error.
	202	0101001100										
	203	1101001100	BC all indoor units Operation mode	Cooling only ON	Cooling only OFF	Heating only ON	Heating only OFF	Mixed mode operation ON	Mixed mode operation OFF	Ventilation	Stop	Item No. 203 is applicable only to the PURY series.
	204	0011001100										
	205	1011001100	Outdoor unit Operation mode	Permissible stop	Standby	Cooling only	*Cooling main	Heating only	*Heating main			Items marked with * are only applicable to the PURY series.
	206	0111001100										
	207	1111001100										
	208	0000101100	Outdoor unit control mode	Stop	Thermo OFF	Abnormal stop	Scheduled control	Initial start up	Defrost	Oil balance	Low frequency oil recovery	
	209	1000101100		Warm up mode	Refrigerant recovery							

	No	SW	Item	Display								Remarks
		1234567890		LD1	LD2	LD3	LD4	LD5	LD6	LD7	LD8	
Data before error	210	0100101100										
	211	1100101100	Relay output display 1 Lighting	Comp in operation	Comp 1 in operation	Comp 2 in operation		52C1	52C2		Always lit	Items marked with * are only applicable to the PURY series.
	212	0010101100	Relay output display 2 Lighting	21S4a	21S4b		CH11	CH12				
	213	1010101100	Relay output display 3 Lighting	SV1	*SV2	SV3	*SV4a	*SV4b	*SV4c			
	214	0110101100	Relay output display 4 Lighting	*SV5a	SV5b			*SV4d		52F		
	215	1110101100										
	216	0001101100	TH11	-99.9 to 999.9								The unit is [°C] or [°F]*1
	217	1001101100	TH12	-99.9 to 999.9								
	218	0101101100										
	219	1101101100	TH5	-99.9 to 999.9								
	220	0011101100	TH6	-99.9 to 999.9								
	221	1011101100	TH7	-99.9 to 999.9								
	222	0111101100	TH8	-99.9 to 999.9								Item No. 222 is applicable only to the PUHY series.
	223	1111101100										
	224	0000011100										
	225	1000011100										
	226	0100011100										
	227	1100011100										
	228	0010011100										
	229	1010011100										
	230	0110011100										
	231	1110011100	THHS1	-99.9 to 999.9								The unit is [°C] or [°F]*1
	232	0001011100										
	233	1001011100										
	234	0101011100										
	235	1101011100	THHS5	-99.9 to 999.9								
	236	0011011100										
	237	1011011100										
	238	0111011100										
	239	1111011100										
	240	0000111100										
	241	1000111100										
	242	0100111100										

*1 Enabled when DIP SW5-3 on the outdoor unit controller board is set to ON.

	No	SW	Item	Display								Remarks
		1234567890		LD1	LD2	LD3	LD4	LD5	LD6	LD7	LD8	
Data before error	243	1100111100	High-pressure sensor data	-99.9 to 999.9								The unit is [kgf/cm^2] or [psi]*1
	244	0010111100	Low-pressure sensor data	-99.9 to 999.9								
	245	1010111100										
	246	0110111100										
	247	1110111100										
	248	0001111100										
	249	1001111100	∑ × Qj (∑ × Qjc + ∑ × Qjh)	0000 to 9999								
	250	0101111100	∑ × Qjc	0000 to 9999								
	251	1101111100	∑ × Qjh	0000 to 9999								
	252	0011111100	Target Tc	-99.9 to 999.9								The unit is [°C] or [°F]*1
	253	1011111100	Target Te	-99.9 to 999.9								
	254	0111111100	Tc	-99.9 to 999.9								
	255	1111111100	Te	-99.9 to 999.9								
	256	0000000010										
	257	1000000010										
	258	0100000010	All temporary frequencies	0000 to 9999								Control data [Hz]
	259	1100000010	Control frequency of COMP 1	0000 to 9999								
	260	0010000010	Control frequency of COMP 2	0000 to 9999								
	261	1010000010										
	262	0110000010	Operation frequency of COMP 1	0000 to 9999								Operation frequency of compressor [Hz]*2
	263	1110000010										
	264	0001000010										
	265	1001000010	AK1	0000 to 9999								Control data
	266	0101000010										
	267	1101000010										
	268	0011000010	FAN1	0000 to 9999								Fan inverter output [%]
	269	1011000010										
	270	0111000010										

*1 Enabled when DIP SW5-3 on the outdoor unit controller board is set to ON.
*2. Output frequency of the inverter depends on the type of compressor and equals the integer multiples (X1, X2 etc.) of the operating frequency of the compressor.

	No	SW	Item	Display								Remarks
		1234567890		LD1	LD2	LD3	LD4	LD5	LD6	LD7	LD8	
Data before error	271	1111000010	Number of fans in operation	0000 to 9999								
	272	0000100010										
	273	1000100010										
	274	0100100010										
	275	1100100010										
	276	0010100010										
	277	1010100010										
	278	0110100010										
	279	1110100010	COMP 1 operation current (DC)	-99.9 to 999.9								Peak value [A]
	280	0001100010										
	281	1001100010										
	282	0101100010	COMP 1 bus voltage	-99.9 to 999.9								The unit is [V]
	283	1101100010										
	284	0011100010										
	285	1011100010										
	286	0111100010										
	287	1111100010										
	288	0000010010	COMP 1 Operation time Upper 4 digits	0000 to 9999								The unit is [h]
	289	1000010010	COMP 1 Operation time Lower 4 digits	0000 to 9999								
	290	0100010010	COMP 2 Operation time Upper 4 digits	0000 to 9999								
	291	1100010010	COMP 2 Operation time Lower 4 digits	0000 to 9999								
	292	0010010010										
	293	1010010010										
	294	0110010010	COMP 1 number of start-stop events Upper 4 digits	0000 to 9999								Count-up at start-up The unit is [Time]

	No	SW	Item	Display								Remarks
		1234567890		LD1	LD2	LD3	LD4	LD5	LD6	LD7	LD8	
Data before error	295	1110010010	COMP 1 number of start-stop events Lower 4 digits	0000 to 9999								Count-up at start-up The unit is [Time]
	296	0001010010	COMP 2 number of start-stop events Upper 4 digits	0000 to 9999								
	297	1001010010	COMP 2 number of start-stop events Lower 4 digits	0000 to 9999								
	298	0101010010										
	299	1101010010										
	300	0011010010										
	301	1011010010										
	302	0111010010										
	303	1111010010										
	304	0000110010										
	305	1000110010										
	306	0100110010										
	307	1100110010										
	308	0010110010										
	309	1010110010										
	310	0110110010										
	311	1110110010										
	312	0001110010										
	313	1001110010										
	314	0101110010										
	315	1101110010										
	316	0011110010										
	317	1011110010										
	318	0111110010										
	319	1111110010										
	320	0000001010	BC controller (Main controller or standard controller) TH11	-99.9 to 999.9								The unit is [°C] or [°F]*1 Items No. 320 through No. 325 and No. 330 through No. 338 are applicable to the PURY series.
	321	1000001010	BC controller (Main controller or standard controller) TH12	-99.9 to 999.9								

*1 Enabled when DIP SW5-3 on the outdoor unit controller board is set to ON.

	No	SW	Item	Display								Remarks
		1234567890		LD1	LD2	LD3	LD4	LD5	LD6	LD7	LD8	
Data before error	322	0100001010	BC controller (Main controller or standard controller) TH15	-99.9 to 999.9								The unit is [°C] or [°F]*1 Items No. 320 through No. 325 and No. 330 through No. 338 are applicable to the PURY series.
	323	1100001010	BC controller (Main controller or standard controller) TH16	-99.9 to 999.9								
	324	0010001010	BC controller (Main controller or standard controller) 63HS1	-99.9 to 999.9								The unit is [kgf/cm^2] or [psi]*1
	325	1010001010	BC controller (Main controller or standard controller) 63HS3	-99.9 to 999.9								
	326	0110001010										
	327	1110001010										
	328	0001001010										
	329	1001001010										
	330	0101001010	BC controller (Main controller or standard controller) LEV1	0000 to 2000								LEV 1 opening (Fully open: 2000)
	331	1101001010	BC controller (Main controller or standard controller) LEV3	0000 to 2000								LEV 3 opening (Fully open: 2000)
	332	0011001010	BC controller (Sub controller 1) TH22	-99.9 to 999.9								The unit is [°C] or [°F]*1
	333	1011001010	BC controller (Sub controller 1) TH25	-99.9 to 999.9								
	334	0111001010	BC controller (Sub controller 1) LEV3a	0000 to 2000								LEV 3a opening (Fully open: 2000)
	335	1111001010	BC controller (Sub controller 2) TH22	-99.9 to 999.9								The unit is [°C] or [°F]*1
	336	0000101010	BC controller (Sub controller 2) TH25	-99.9 to 999.9								

*1 Enabled when DIP SW5-3 on the outdoor unit controller board is set to ON.

	No	SW	Item	Display								Remarks
		1234567890		LD1	LD2	LD3	LD4	LD5	LD6	LD7	LD8	
Data before error	337	1000101010	BC controller (Sub controller 2) LEV3a	0000 to 2000								LEV 3a opening (Fully open: 2000)
	338	0100101010	BC controller (Main controller or standard controller) LEV2	0000 to 2000								LEV 2 opening (Fully open: 2000)
	339	1100101010										
	340	0010101010										
	341	1010101010										
	342	0110101010										
	343	1110101010										
	344	0001101010										
	345	1001101010										
	346	0101101010										
	347	1101101010										
	348	0011101010										
	349	1011101010										
	350	0111101010										
Data on indoor unit system	351	1111101010	IC1 Address/capacity code	0000 to 9999				0000 to 9999				Displayed alternately every 5 seconds
	352	0000011010	IC2 Address/capacity code	0000 to 9999				0000 to 9999				
	353	1000011010	IC3 Address/capacity code	0000 to 9999				0000 to 9999				
	354	0100011010	IC4 Address/capacity code	0000 to 9999				0000 to 9999				
	355	1100011010	IC5 Address/capacity code	0000 to 9999				0000 to 9999				
	356	0010011010	IC6 Address/capacity code	0000 to 9999				0000 to 9999				
	357	1010011010	IC7 Address/capacity code	0000 to 9999				0000 to 9999				
	358	0110011010	IC8 Address/capacity code	0000 to 9999				0000 to 9999				
	359	1110011010	IC9 Address/capacity code	0000 to 9999				0000 to 9999				
	360	0001011010	IC10 Address/capacity code	0000 to 9999				0000 to 9999				
	361	1001011010	IC11 Address/capacity code	0000 to 9999				0000 to 9999				

	No	SW	Item	Display								Remarks
		1234567890		LD1	LD2	LD3	LD4	LD5	LD6	LD7	LD8	
Data on indoor unit system	362	0101011010	IC12 Address/capacity code	0000 to 9999				0000 to 9999				Displayed alternately every 5 seconds
	363	1101011010	IC13 Address/capacity code	0000 to 9999				0000 to 9999				
	364	0011011010	IC14 Address/capacity code	0000 to 9999				0000 to 9999				
	365	1011011010	IC15 Address/capacity code	0000 to 9999				0000 to 9999				
	366	0111011010	IC16 Address/capacity code	0000 to 9999				0000 to 9999				
	367	1111011010	IC17 Address/capacity code	0000 to 9999				0000 to 9999				
	368	0000111010	IC18 Address/capacity code	0000 to 9999				0000 to 9999				
	369	1000111010	IC19 Address/capacity code	0000 to 9999				0000 to 9999				
	370	0100111010	IC20 Address/capacity code	0000 to 9999				0000 to 9999				
	371	1100111010	IC21 Address/capacity code	0000 to 9999				0000 to 9999				
	372	0010111010	IC22 Address/capacity code	0000 to 9999				0000 to 9999				
	373	1010111010	IC23 Address/capacity code	0000 to 9999				0000 to 9999				
	374	0110111010	IC24 Address/capacity code	0000 to 9999				0000 to 9999				
	375	1110111010	IC25 Address/capacity code	0000 to 9999				0000 to 9999				
	376	0001111010	IC26 Address/capacity code	0000 to 9999				0000 to 9999				
	377	1001111010	IC27 Address/capacity code	0000 to 9999				0000 to 9999				
	378	0101111010	IC28 Address/capacity code	0000 to 9999				0000 to 9999				
	379	1101111010	IC29 Address/capacity code	0000 to 9999				0000 to 9999				
	380	0011111010	IC30 Address/capacity code	0000 to 9999				0000 to 9999				
	381	1011111010	IC31 Address/capacity code	0000 to 9999				0000 to 9999				

	No	SW	Item	Display								Remarks
		1234567890		LD1	LD2	LD3	LD4	LD5	LD6	LD7	LD8	
Data on indoor unit system	382	0111111010	IC32 Address/capacity code	0000 to 9999				0000 to 9999				Displayed alternately every 5 seconds
	383	1111111010										
	384	0000000110										
	385	1000000110										
	386	0100000110										
	387	1100000110										
	388	0010000110										
	389	1010000110										
	390	0110000110										
	391	1110000110										
	392	0001000110										
	393	1001000110										
	394	0101000110										
	395	1101000110										
	396	0011000110										
	397	1011000110										
	398	0111000110										
	399	1111000110										
	400	0000100110										
	401	1000100110										
	402	0100100110										
	403	1100100110										
	404	0010100110										
	405	1010100110										
	406	0110100110										
	407	1110100110										
	408	0001100110	IC1 Suction temperature	-99.9 to 999.9								The unit is [°C] or [°F]*1
	409	1001100110	IC2 Suction temperature	-99.9 to 999.9								
	410	0101100110	IC3 Suction temperature	-99.9 to 999.9								
	411	1101100110	IC4 Suction temperature	-99.9 to 999.9								
	412	0011100110	IC5 Suction temperature	-99.9 to 999.9								
	413	1011100110	IC6 Suction temperature	-99.9 to 999.9								
	414	0111100110	IC7 Suction temperature	-99.9 to 999.9								
	415	1111100110	IC8 Suction temperature	-99.9 to 999.9								
	416	0000010110	IC9 Suction temperature	-99.9 to 999.9								

*1 Enabled when DIP SW5-3 on the outdoor unit controller board is set to ON.

	No	SW	Item	Display								Remarks
		1234567890		LD1	LD2	LD3	LD4	LD5	LD6	LD7	LD8	
Data on indoor unit system	417	1000010110	IC10 Suction temperature	-99.9 to 999.9								The unit is [°C] or [°F]*1
	418	0100010110	IC11 Suction temperature	-99.9 to 999.9								
	419	1100010110	IC12 Suction temperature	-99.9 to 999.9								
	420	0010010110	IC13 Suction temperature	-99.9 to 999.9								
	421	1010010110	IC14 Suction temperature	-99.9 to 999.9								
	422	0110010110	IC15 Suction temperature	-99.9 to 999.9								
	423	1110010110	IC16 Suction temperature	-99.9 to 999.9								
	424	0001010110	IC17 Suction temperature	-99.9 to 999.9								
	425	1001010110	IC18 Suction temperature	-99.9 to 999.9								
	426	0101010110	IC19 Suction temperature	-99.9 to 999.9								
	427	1101010110	IC20 Suction temperature	-99.9 to 999.9								
	428	0011010110	IC21 Suction temperature	-99.9 to 999.9								
	429	1011010110	IC22 Suction temperature	-99.9 to 999.9								
	430	0111010110	IC23 Suction temperature	-99.9 to 999.9								
	431	1111010110	IC24 Suction temperature	-99.9 to 999.9								
	432	0000110110	IC25 Suction temperature	-99.9 to 999.9								
	433	1000110110	IC26 Suction temperature	-99.9 to 999.9								
	434	0100110110	IC27 Suction temperature	-99.9 to 999.9								
	435	1100110110	IC28 Suction temperature	-99.9 to 999.9								
	436	0010110110	IC29 Suction temperature	-99.9 to 999.9								
	437	1010110110	IC30 Suction temperature	-99.9 to 999.9								
	438	0110110110	IC31 Suction temperature	-99.9 to 999.9								
	439	1110110110	IC32 Suction temperature	-99.9 to 999.9								
	440	0001110110										
	441	1001110110										
	442	0101110110										
	443	1101110110										
	444	0011110110										
	445	1011110110										

*1 Enabled when DIP SW5-3 on the outdoor unit controller board is set to ON.

	No	SW	Item	Display								Remarks
		1234567890		LD1	LD2	LD3	LD4	LD5	LD6	LD7	LD8	
Data on indoor unit system	446	0111110110										
	447	1111110110										
	448	0000001110										
	449	1000001110										
	450	0100001110										
	451	1100001110										
	452	0010001110										
	453	1010001110										
	454	0110001110										
	455	1110001110										
	456	0001001110										
	457	1001001110										
	458	0101001110	IC1 Liquid pipe temperature	-99.9 to 999.9								The unit is [°C] or [°F]*1
	459	1101001110	IC2 Liquid pipe temperature	-99.9 to 999.9								
	460	0011001110	IC3 Liquid pipe temperature	-99.9 to 999.9								
	461	1011001110	IC4 Liquid pipe temperature	-99.9 to 999.9								
	462	0111001110	IC5 Liquid pipe temperature	-99.9 to 999.9								
	463	1111001110	IC6 Liquid pipe temperature	-99.9 to 999.9								
	464	0000101110	IC7 Liquid pipe temperature	-99.9 to 999.9								
	465	1000101110	IC8 Liquid pipe temperature	-99.9 to 999.9								
	466	0100101110	IC9 Liquid pipe temperature	-99.9 to 999.9								
	467	1100101110	IC10 Liquid pipe temperature	-99.9 to 999.9								
	468	0010101110	IC11 Liquid pipe temperature	-99.9 to 999.9								
	469	1010101110	IC12 Liquid pipe temperature	-99.9 to 999.9								
	470	0110101110	IC13 Liquid pipe temperature	-99.9 to 999.9								

*1 Enabled when DIP SW5-3 on the outdoor unit controller board is set to ON.

	No	SW	Item	Display								Remarks
		1234567890		LD1	LD2	LD3	LD4	LD5	LD6	LD7	LD8	
Data on indoor unit system	471	1110101110	IC14 Liquid pipe temperature	-99.9 to 999.9								The unit is [°C] or [°F]*1
	472	0001101110	IC15 Liquid pipe temperature	-99.9 to 999.9								
	473	1001101110	IC16 Liquid pipe temperature	-99.9 to 999.9								
	474	0101101110	IC17 Liquid pipe temperature	-99.9 to 999.9								
	475	1101101110	IC18 Liquid pipe temperature	-99.9 to 999.9								
	476	0011101110	IC19 Liquid pipe temperature	-99.9 to 999.9								
	477	1011101110	IC20 Liquid pipe temperature	-99.9 to 999.9								
	478	0111101110	IC21 Liquid pipe temperature	-99.9 to 999.9								
	479	1111101110	IC22 Liquid pipe temperature	-99.9 to 999.9								
	480	0000011110	IC23 Liquid pipe temperature	-99.9 to 999.9								
	481	1000011110	IC24 Liquid pipe temperature	-99.9 to 999.9								
	482	0100011110	IC25 Liquid pipe temperature	-99.9 to 999.9								
	483	1100011110	IC26 Liquid pipe temperature	-99.9 to 999.9								
	484	0010011110	IC27 Liquid pipe temperature	-99.9 to 999.9								
	485	1010011110	IC28 Liquid pipe temperature	-99.9 to 999.9								
	486	0110011110	IC29 Liquid pipe temperature	-99.9 to 999.9								
	487	1110011110	IC30 Liquid pipe temperature	-99.9 to 999.9								
	488	0001011110	IC31 Liquid pipe temperature	-99.9 to 999.9								
	489	1001011110	IC32 Liquid pipe temperature	-99.9 to 999.9								

*1 Enabled when DIP SW5-3 on the outdoor unit controller board is set to ON.

	No	SW	Item	Display								Remarks
		1234567890		LD1	LD2	LD3	LD4	LD5	LD6	LD7	LD8	
Data on indoor unit system	490	0101011110										
	491	1101011110										
	492	0011011110										
	493	1011011110										
	494	0111011110										
	495	1111011110										
	496	0000111110										
	497	1000111110										
	498	0100111110										
	499	1100111110										
	500	0010111110										
	501	1010111110										
	502	0110111110										
	503	1110111110										
	504	0001111110										
	505	1001111110										
	506	0101111110										
	507	1101111110										
	508	0011111110										
	509	1011111110										
	510	0111111110										
	511	1111111110										
	512	0000000001	Self-address	Alternate display of self address and unit model								
	513	1000000001	IC/FU address	Count-up display of number of connected units								
	514	0100000001	RC address	Count-up display of number of connected units								
	515	1100000001	BC/TU address	Count-up display of number of connected units								
	516	0010000001	OS address	Count-up display of number of connected units								
	517	1010000001	Main board S/W version etc.	S/W version -> Refrigerant type -> Model and capacity -> Communication address								Refer to 2. "LED display at initial setting".
	518	0110000001										
	519	1110000001										
	520	0001000001										
	521	1001000001										
	522	0101000001										
	523	1101000001	IC1 Gas pipe temperature	-99.9 to 999.9								The unit is [°C] or [°F]*1
	524	0011000001	IC2 Gas pipe temperature	-99.9 to 999.9								

*1 Enabled when DIP SW5-3 on the outdoor unit controller board is set to ON.

	No	SW	Item	Display								Remarks
		1234567890		LD1	LD2	LD3	LD4	LD5	LD6	LD7	LD8	
Data on indoor unit system	525	1011000001	IC3 Gas pipe temperature	-99.9 to 999.9								The unit is [°C] or [°F]*1
	526	0111000001	IC4 Gas pipe temperature	-99.9 to 999.9								
	527	1111000001	IC5 Gas pipe temperature	-99.9 to 999.9								
	528	0000100001	IC6 Gas pipe temperature	-99.9 to 999.9								
	529	1000100001	IC7 Gas pipe temperature	-99.9 to 999.9								
	530	0100100001	IC8 Gas pipe temperature	-99.9 to 999.9								
	531	1100100001	IC9 Gas pipe temperature	-99.9 to 999.9								
	532	0010100001	IC10 Gas pipe temperature	-99.9 to 999.9								
	533	1010100001	IC11 Gas pipe temperature	-99.9 to 999.9								
	534	0110100001	IC12 Gas pipe temperature	-99.9 to 999.9								
	535	1110100001	IC13 Gas pipe temperature	-99.9 to 999.9								
	536	0001100001	IC14 Gas pipe temperature	-99.9 to 999.9								
	537	1001100001	IC15 Gas pipe temperature	-99.9 to 999.9								
	538	0101100001	IC16 Gas pipe temperature	-99.9 to 999.9								
	539	1101100001	IC17 Gas pipe temperature	-99.9 to 999.9								
	540	0011100001	IC18 Gas pipe temperature	-99.9 to 999.9								
	541	1011100001	IC19 Gas pipe temperature	-99.9 to 999.9								
	542	0111100001	IC20 Gas pipe temperature	-99.9 to 999.9								
	543	1111100001	IC21 Gas pipe temperature	-99.9 to 999.9								

*1 Enabled when DIP SW5-3 on the outdoor unit controller board is set to ON.

	No	SW	Item	Display								Remarks
		1234567890		LD1	LD2	LD3	LD4	LD5	LD6	LD7	LD8	
Data on indoor unit system	544	0000010001	IC22 Gas pipe temperature	-99.9 to 999.9								The unit is [°C] or [°F]*1
	545	1000010001	IC23 Gas pipe temperature	-99.9 to 999.9								
	546	0100010001	IC24 Gas pipe temperature	-99.9 to 999.9								
	547	1100010001	IC25 Gas pipe temperature	-99.9 to 999.9								
	548	0010010001	IC26 Gas pipe temperature	-99.9 to 999.9								
	549	1010010001	IC27 Gas pipe temperature	-99.9 to 999.9								
	550	0110010001	IC28 Gas pipe temperature	-99.9 to 999.9								
	551	1110010001	IC29 Gas pipe temperature	-99.9 to 999.9								
	552	0001010001	IC30 Gas pipe temperature	-99.9 to 999.9								
	553	1001010001	IC31 Gas pipe temperature	-99.9 to 999.9								
	554	0101010001	IC32 Gas pipe temperature	-99.9 to 999.9								
	555	1101010001										
	556	0011010001										
	557	1011010001										
	558	0111010001										
	559	1111010001										
	560	0000110001										
	561	1000110001										
	562	0100110001										
	563	1100110001										
	564	0010110001										
	565	1010110001										
	566	0110110001										
	567	1110110001										
	568	0001110001										
	569	1001110001										
	570	0101110001										

*1 Enabled when DIP SW5-3 on the outdoor unit controller board is set to ON.

	No	SW	Item	Display								Remarks
		1234567890		LD1	LD2	LD3	LD4	LD5	LD6	LD7	LD8	
Data on indoor unit system	571	1101110001										
	572	0011110001										
	573	1011110001	IC1SH	-99.9 to 999.9								The unit is [deg°C] or [deg°F] *1
	574	0111110001	IC2SH	-99.9 to 999.9								
	575	1111110001	IC3SH	-99.9 to 999.9								
	576	0000001001	IC4SH	-99.9 to 999.9								
	577	1000001001	IC5SH	-99.9 to 999.9								
	578	0100001001	IC6SH	-99.9 to 999.9								
	579	1100001001	IC7SH	-99.9 to 999.9								
	580	0010001001	IC8SH	-99.9 to 999.9								
	581	1010001001	IC9SH	-99.9 to 999.9								
	582	0110001001	IC10SH	-99.9 to 999.9								
	583	1110001001	IC11SH	-99.9 to 999.9								
	584	0001001001	IC12SH	-99.9 to 999.9								
	585	1001001001	IC13SH	-99.9 to 999.9								
	586	0101001001	IC14SH	-99.9 to 999.9								
	587	1101001001	IC15SH	-99.9 to 999.9								
	588	0011001001	IC16SH	-99.9 to 999.9								
	589	1011001001	IC17SH	-99.9 to 999.9								
	590	0111001001	IC18SH	-99.9 to 999.9								
	591	1111001001	IC19SH	-99.9 to 999.9								
	592	0000101001	IC20SH	-99.9 to 999.9								
	593	1000101001	IC21SH	-99.9 to 999.9								
	594	0100101001	IC22SH	-99.9 to 999.9								
	595	1100101001	IC23SH	-99.9 to 999.9								
	596	0010101001	IC24SH	-99.9 to 999.9								
	597	1010101001	IC25SH	-99.9 to 999.9								
	598	0110101001	IC26SH	-99.9 to 999.9								
	599	1110101001	IC27SH	-99.9 to 999.9								
	600	0001101001	IC28SH	-99.9 to 999.9								
	601	1001101001	IC29SH	-99.9 to 999.9								
	602	0101101001	IC30SH	-99.9 to 999.9								
	603	1101101001	IC31SH	-99.9 to 999.9								
	604	0011101001	IC32SH	-99.9 to 999.9								
	605	1011101001										
	606	0111101001										
	607	1111101001										
	608	0000011001										
	609	1000011001										

*1 Enabled when DIP SW5-3 on the outdoor unit controller board is set to ON.

	No	SW	Item	Display								Remarks
		1234567890		LD1	LD2	LD3	LD4	LD5	LD6	LD7	LD8	
Data on indoor unit system	610	0100011001										
	611	1100011001										
	612	0010011001										
	613	1010011001										
	614	0110011001										
	615	1110011001										
	616	0001011001										
	617	1001011001										
	618	0101011001										
	619	1101011001										
	620	0011011001										
	621	1011011001										
	622	0111011001										
	623	1111011001	IC1SC	-99.9 to 999.9								The unit is [deg°C] or [deg°F] *1
	624	0000111001	IC2SC	-99.9 to 999.9								
	625	1000111001	IC3SC	-99.9 to 999.9								
	626	0100111001	IC4SC	-99.9 to 999.9								
	627	1100111001	IC5SC	-99.9 to 999.9								
	628	0010111001	IC6SC	-99.9 to 999.9								
	629	1010111001	IC7SC	-99.9 to 999.9								
	630	0110111001	IC8SC	-99.9 to 999.9								
	631	1110111001	IC9SC	-99.9 to 999.9								
	632	0001111001	IC10SC	-99.9 to 999.9								
	633	1001111001	IC11SC	-99.9 to 999.9								
	634	0101111001	IC12SC	-99.9 to 999.9								
	635	1101111001	IC13SC	-99.9 to 999.9								
	636	0011111001	IC14SC	-99.9 to 999.9								
	637	1011111001	IC15SC	-99.9 to 999.9								
	638	0111111001	IC16SC	-99.9 to 999.9								
	639	1111111001	IC17SC	-99.9 to 999.9								
	640	0000000101	IC18SC	-99.9 to 999.9								
	641	1000000101	IC19SC	-99.9 to 999.9								
	642	0100000101	IC20SC	-99.9 to 999.9								
	643	1100000101	IC21SC	-99.9 to 999.9								
	644	0010000101	IC22SC	-99.9 to 999.9								
	645	1010000101	IC23SC	-99.9 to 999.9								
	646	0110000101	IC24SC	-99.9 to 999.9								
	647	1110000101	IC25SC	-99.9 to 999.9								
	648	0001000101	IC26SC	-99.9 to 999.9								

*1 Enabled when DIP SW5-3 on the outdoor unit controller board is set to ON.

	No	SW	Item	Display								Remarks
		1234567890		LD1	LD2	LD3	LD4	LD5	LD6	LD7	LD8	
Data on indoor unit system	649	1001000101	IC27SC	-99.9 to 999.9								The unit is [deg°C] or [deg°F] *1
	650	0101000101	IC28SC	-99.9 to 999.9								
	651	1101000101	IC29SC	-99.9 to 999.9								
	652	0011000101	IC30SC	-99.9 to 999.9								
	653	1011000101	IC31SC	-99.9 to 999.9								
	654	0111000101	IC32SC	-99.9 to 999.9								
	655	1111000101										
	656	0000100101										
	657	1000100101										
	658	0100100101										
	659	1100100101										
	660	0010100101										
	661	1010100101										
	662	0110100101										
	663	1110100101										
	664	0001100101										
	665	1001100101										
	666	0101100101										
	667	1101100101										
	668	0011100101										
	669	1011100101										
	670	0111100101										
	671	1111100101										
	672	0000010101										
	673	1000010101										
	674	0100010101										
	675	1100010101										
Setting data	676	0010010101	Compressor INV board S/W version	0.00 to 99.99								
	677	1010010101										
	678	0110010101										
	679	1110010101	Fan INV board S/W version	0.00 to 99.99								
	680	0001010101										
	681	1001010101										
	682	0101010101										
	683	1101010101										
	684	0011010101										
	685	1011010101										

*1 Enabled when DIP SW5-3 on the outdoor unit controller board is set to ON.

	No	SW	Item	Display								Remarks
		1234567890		LD1	LD2	LD3	LD4	LD5	LD6	LD7	LD8	
Setting data	686	0111010101										
	687	1111010101										
	688	0000110101	Current time	00:00 to 23:59								Hour: minute
	689	1000110101	Current time -2	00.00 to 99.12 / 1 to 31								Year and month, and date alternate display
	690	0100110101	Time of error detection 1	00:00 to 23:59								Hour: minute
	691	1100110101	Time of error detection 1-2	00.00 to 99.12 / 1 to 31								Year and month, and date alternate display
	692	0010110101	Time of error detection 2	00:00 to 23:59								Hour: minute
	693	1010110101	Time of error detection 2-2	00.00 to 99.12 / 1 to 31								Year and month, and date alternate display
	694	0110110101	Time of error detection 3	00:00 to 23:59								Hour: minute
	695	1110110101	Time of error detection 3-2	00.00 to 99.12 / 1 to 31								Year and month, and date alternate display
	696	0001110101	Time of error detection 4	00:00 to 23:59								Hour: minute
	697	1001110101	Time of error detection 4-2	00.00 to 99.12 / 1 to 31								Year and month, and date alternate display
	698	0101110101	Time of error detection 5	00:00 to 23:59								Hour: minute
	699	1101110101	Time of error detection 5-2	00.00 to 99.12 / 1 to 31								Year and month, and date alternate display
	700	0011110101	Time of error detection 6	00:00 to 23:59								Hour: minute
	701	1011110101	Time of error detection 6-2	00.00 to 99.12 / 1 to 31								Year and month, and date alternate display
	702	0111110101	Time of error detection 7	00:00 to 23:59								Hour: minute
	703	1111110101	Time of error detection 7-2	00.00 to 99.12 / 1 to 31								Year and month, and date alternate display
	704	0000001101	Time of error detection 8	00:00 to 23:59								Hour: minute
	705	1000001101	Time of error detection 8-2	00.00 to 99.12 / 1 to 31								Year and month, and date alternate display
	706	0100001101	Time of error detection 9	00:00 to 23:59								Hour: minute
	707	1100001101	Time of error detection 9-2	00.00 to 99.12 / 1 to 31								Year and month, and date alternate display
	708	0010001101	Time of error detection 10	00:00 to 23:59								Hour: minute
	709	1010001101	Time of error detection 10-2	00.00 to 99.12 / 1 to 31								Year and month, and date alternate display

	No	SW	Item	Display								Remarks
		1234567890		LD1	LD2	LD3	LD4	LD5	LD6	LD7	LD8	
Setting data	710	0110001101	Time of last data backup before error	00:00 to 23:59								Hour: minute
	711	1110001101	Time of last data backup before error -2	00.00 to 99.12 / 1 to 31								Year and month, and date alternate display
	712	0001001101										
	713	1001001101										
Data on indoor unit system	714	0101001101	IC1 LEV opening	0000 to 2000								Fully open: 2000
	715	1101001101	IC2 LEV opening	0000 to 2000								
	716	0011001101	IC3 LEV opening	0000 to 2000								
	717	1011001101	IC4 LEV opening	0000 to 2000								
	718	0111001101	IC5 LEV opening	0000 to 2000								
	719	1111001101	IC6 LEV opening	0000 to 2000								
	720	0000101101	IC7 LEV opening	0000 to 2000								
	721	1000101101	IC8 LEV opening	0000 to 2000								
	722	0100101101	IC9 LEV opening	0000 to 2000								
	723	1100101101	IC10 LEV opening	0000 to 2000								
	724	0010101101	IC11 LEV opening	0000 to 2000								
	725	1010101101	IC12 LEV opening	0000 to 2000								
	726	0110101101	IC13 LEV opening	0000 to 2000								
	727	1110101101	IC14 LEV opening	0000 to 2000								
	728	0001101101	IC15 LEV opening	0000 to 2000								
	729	1001101101	IC16 LEV opening	0000 to 2000								
	730	0101101101	IC17 LEV opening	0000 to 2000								
	731	1101101101	IC18 LEV opening	0000 to 2000								
	732	0011101101	IC19 LEV opening	0000 to 2000								
	733	1011101101	IC20 LEV opening	0000 to 2000								
	734	0111101101	IC21 LEV opening	0000 to 2000								
	735	1111101101	IC22 LEV opening	0000 to 2000								
	736	0000011101	IC23 LEV opening	0000 to 2000								
	737	1000011101	IC24 LEV opening	0000 to 2000								

	No	SW	Item	Display								Remarks
		1234567890		LD1	LD2	LD3	LD4	LD5	LD6	LD7	LD8	
Data on indoor unit system	738	0100011101	IC25 LEV opening	0000 to 2000								Fully open: 2000
	739	1100011101	IC26 LEV opening	0000 to 2000								
	740	0010011101	IC27 LEV opening	0000 to 2000								
	741	1010011101	IC28 LEV opening	0000 to 2000								
	742	0110011101	IC29 LEV opening	0000 to 2000								
	743	1110011101	IC30 LEV opening	0000 to 2000								
	744	0001011101	IC31 LEV opening	0000 to 2000								
	745	1001011101	IC32 LEV opening	0000 to 2000								
	746	0101011101										
	747	1101011101										
	748	0011011101										
	749	1011011101										
	750	0111011101										
	751	1111011101										
	752	0000111101										
	753	1000111101										
	754	0100111101										
	755	1100111101										
	756	0010111101										
	757	1010111101										
	758	0110111101										
	759	1110111101										
	760	0001111101										
	761	1001111101										
	762	0101111101										
	763	1101111101										
	764	0011111101	IC1 Operation mode	0000 : Stop 0001 : Ventilation 0002 : Cooling 0003 : Heating 0004 : Dry								
	765	1011111101	IC2 Operation mode									
	766	0111111101	IC3 Operation mode									
	767	1111111101	IC4 Operation mode									
	768	0000000011	IC5 Operation mode									
	769	1000000011	IC6 Operation mode									
	770	0100000011	IC7 Operation mode									

	No	SW	Item	Display								Remarks
		1234567890		LD1	LD2	LD3	LD4	LD5	LD6	LD7	LD8	
Data on indoor unit system	771	1100000011	IC8 Operation mode	0000 : Stop 0001 : Ventilation 0002 : Cooling 0003 : Heating 0004 : Dry								
	772	0010000011	IC9 Operation mode									
	773	1010000011	IC10 Operation mode									
	774	0110000011	IC11 Operation mode									
	775	1110000011	IC12 Operation mode									
	776	0001000011	IC13 Operation mode									
	777	1001000011	IC14 Operation mode									
	778	0101000011	IC15 Operation mode									
	779	1101000011	IC16 Operation mode									
	780	0011000011	IC17 Operation mode									
	781	1011000011	IC18 Operation mode									
	782	0111000011	IC19 Operation mode									
	783	1111000011	IC20 Operation mode									
	784	0000100011	IC21 Operation mode									
	785	1000100011	IC22 Operation mode									
	786	0100100011	IC23 Operation mode									
	787	1100100011	IC24 Operation mode									
	788	0010100011	IC25 Operation mode									
	789	1010100011	IC26 Operation mode									
	790	0110100011	IC27 Operation mode									
	791	1110100011	IC28 Operation mode									
	792	0001100011	IC29 Operation mode									
	793	1001100011	IC30 Operation mode									
	794	0101100011	IC31 Operation mode									
	795	1101100011	IC32 Operation mode									
	796	0011100011										
	797	1011100011										
	798	0111100011										
	799	1111100011										

	No	SW	Item	Display								Remarks
		1234567890		LD1	LD2	LD3	LD4	LD5	LD6	LD7	LD8	
Data on indoor unit system	800	0000010011										
	801	1000010011										
	802	0100010011										
	803	1100010011										
	804	0010010011										
	805	1010010011										
	806	0110010011										
	807	1110010011										
	808	0001010011										
	809	1001010011										
	810	0101010011										
	811	1101010011										
	812	0011010011										
	813	1011010011										
	814	0111010011	IC1 filter	0000 to 9999								Hours since last maintenance [h]
	815	1111001001	IC2 filter	0000 to 9999								
	816	0000101011	IC3 filter	0000 to 9999								
	817	1000101011	IC4 filter	0000 to 9999								
	818	0100101011	IC5 filter	0000 to 9999								
	819	1100101011	IC6 filter	0000 to 9999								
	820	0010101011	IC7 filter	0000 to 9999								
	821	1010101011	IC8 filter	0000 to 9999								
	822	0110101011	IC9 filter	0000 to 9999								
	823	1110101011	IC10 filter	0000 to 9999								
	824	0001101011	IC11 filter	0000 to 9999								
	825	1001101011	IC12 filter	0000 to 9999								
	826	0101101011	IC13 filter	0000 to 9999								
	827	1101101011	IC14 filter	0000 to 9999								
	828	0011101011	IC15 filter	0000 to 9999								
	829	1011101011	IC16 filter	0000 to 9999								
	830	0111101011	IC17 filter	0000 to 9999								
	831	1111101011	IC18 filter	0000 to 9999								
	832	0000011011	IC19 filter	0000 to 9999								
	833	1000011011	IC20 filter	0000 to 9999								
	834	0100011011	IC21 filter	0000 to 9999								
	835	1100011011	IC22 filter	0000 to 9999								
	836	0010011011	IC23 filter	0000 to 9999								
	837	1010011011	IC24 filter	0000 to 9999								
	838	0110011011	IC25 filter	0000 to 9999								
	839	1110011011	IC26 filter	0000 to 9999								

	No	SW	Item	Display								Remarks
		1234567890		LD1	LD2	LD3	LD4	LD5	LD6	LD7	LD8	
Data on indoor unit system	840	0001011011	IC27 filter	0000 to 9999								Hours since last maintenance [h]
	841	1001011011	IC28 filter	0000 to 9999								
	842	0101011011	IC29 filter	0000 to 9999								
	843	1101011011	IC30 filter	0000 to 9999								
	844	0011011011	IC31 filter	0000 to 9999								
	845	1011011011	IC32 filter	0000 to 9999								
	846	0111001001										
	847	1111001011										
	848	0000101011										
	849	1000101011										
	850	0100101011										
	851	1100101011										
	852	0010101011										
	853	1010101011										
	854	0110101011										
	855	1110101011										
	856	0001101011										
	857	1001101011										
	858	0101101011										
	859	1101101011										
	860	0011101011										
	861	1011101011										
	862	0111101011										
	863	1111101011										
Other types of data	864	0000011011										
	865	1000011011										
	866	0100011011										
	867	1100011011										
	868	0010011011										
	869	1010011011										
	870	0110011011										
	871	1110011011	U-phase current effective value	-99.9 to 999.9								The unit is [A]
	872	0001011011	W-phase current effective value 1	-99.9 to 999.9								
	873	1001011011	Power factor phase angle 1	-99.9 to 999.9								The unit is [deg°C] or [deg°F] *1
	874	0101011011										

*1 Enabled when DIP SW5-3 on the outdoor unit controller board is set to ON.

	No	SW	Item	Display								Remarks
		1234567890		LD1	LD2	LD3	LD4	LD5	LD6	LD7	LD8	
Other types of data	875	1101011011										
	876	0011011011										
	877	1011011011										
	878	0111011011										
	879	1111011011										
	880	0000111011	Main board Reset counter	0 to 254								The unit is [time]
	881	1000111011	Compressor INV board Reset counter	0 to 254								
	882	0100111011										
	883	1100111011										
	884	0010111011	Fan INV board Reset counter	0 to 254								
	885	1010111011										
	886	0110111011										
	887	1110111011										
	888	0001111011										
	889	1001111011										
	890	0101111011										
	891	1101111011										
	892	0011111011										
	893	1011111011										
	894	0111111011										
	895	1111111011										
	896	0000000111										
	897	1000000111										
	898	0100000111										
	899	1100000111										
	900	0010000111										
	901	1010000111										
	902	0110000111										
	903	1110000111										
	904	0001000111										
	905	1001000111										
	906	0101000111										
	907	1101000111										
	1020	0011111111										
	1021	1011111111										
	1022	0111111111										
	1023	1111111111										