CITY MULTI® Outdoor Unit: 28-TON PUHY-P336TSHMU-A-BS

MITSUBISHI ELECTRIC

(Consists of Two PUHY-P120THMU-A-BS, One PUHY-P96THMU-A-BS, and One CMY-Y300VBK2 Twinning Kit)

Job Name: Location:

Drawing Reference: Schedule No.

System No.: Date:

OUTDOOR VRFZ HEAT PUMP SYSTEM FEATURES

- 3-phase, 208/230V systems
- Modular variable refrigerant flow zoning (VRFZ) systems; smaller capacity units can be piped together to form a single, large-capacity two-pipe system
- Compact size for each outdoor module; can be transported through standard-sized doorways for installation
- Required Twinning Kit allows for easy field piping connection
- Selectable fan static, 0.12 or 0.24"WG external static pressure; factory set to 0"WG
- Maximum Total Refrigerant Piping Length: 3,280'; Maximum Refrigerant Line Length: 541'; Maximum Control Wiring Length: 1,650'
- Connects to CITY MULTI indoor units; controlled via CITY MULTI Controls Network (CMCN)
- External finish: Pre-coated Galvanized-steel Sheets with thermoset polyester-resin
- Operating Temperature Range
  Cooling (Outdoor): 23° ~ 109°F (-5° ~ +43°C) DB
  Heating (Outdoor): -4° ~ +60°F (-20° ~ +16°C) WB

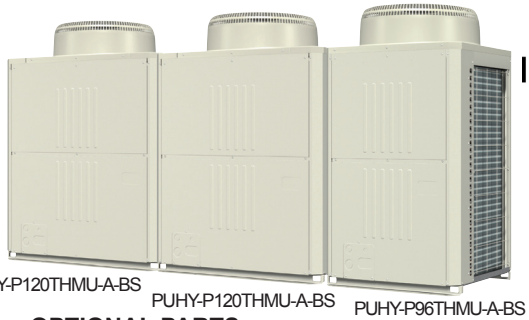

PUHY-P120THMU-A-BS PUHY-P120THMU-A-BS PUHY-P96THMU-A-BS

INVERTER

R410A

OPTIONAL PARTS

- ☐ Twinning Kit*……CMY-Y300VBK2
- ☐ T-Branch Joint (≤ 72,000 Btu/h)……CMY-Y102S-G2
- ☐ T-Branch Joint (≤ 144,000 Btu/h)……CMY-Y102L-G2
- ☐ T-Branch Joint (≤ 234,000 Btu/h)……CMY-Y202-G2
- ☐ T-Branch Joint (≥ 235,000 Btu/h)……CMY-Y302-G2
- ☐ Header (4-Branch; ≤ 72,000 Btu/h)……CMY-Y104-G
- ☐ Header (8-Branch; ≤ 144,000 Btu/h)……CMY-Y108-G
- ☐ Header (10-Branch; ≤ 234,000 Btu/h)……CMY-Y1010-G

* Twinning Kit is necessary to combine the refrigerant flows of the modules and is included in the outdoor unit set.

Specifications		System	Module 1	Module 2	Module 3
Unit Type		PUHY-P336TSHMU-A-BS	PUHY-P120THMU-A-BS	PUHY-P120THMU-A-BS	PUHY-P96THMU-A-BS
Nominal Cooling Capacity	Btu/h	336,000	120,000	120,000	96,000
Nominal Heating Capacity	Btu/h	348,000	120,000	120,000	108,000
External Dimensions (H x W x D)	In. / mm	Refer to Module Data	65 x 48-1/16 x 29-15/16 / 1,650 x 1,220 x 760	65 x 48-1/16 x 29-15/16 / 1,650 x 1,220 x 760	65 x 36-1/4 x 29-15/16 / 1,650 x 920 x 760
Net Weight	Lbs. / kg	1,523 / 690	541 / 245	541 / 245	441 / 200
Electrical Power Requirements	Voltage, Phase, Hertz	Refer to Module Data**	208/230V, 3-phase, 60Hz		
Cooling Power Input	kW	29.50	Refer to System Data		
Heating Power Input	kW	27.96			
Cooling Current (208/230V)	A	90.9 / 82.2	Refer to System Data		
Heating Current (208/230V)	A	86.2 / 77.9			
Minimum Circuit Ampacity (MCA)**	A	Refer to Module Data**	41 / 38**	41 / 38**	35 / 32**
Maximum Overcurrent Protection (MOCP)**	A	Refer to Module Data**	50 / 50**	50 / 50**	40 /40**
Piping Diameter			Refer to System Data		
From Twinning Kit to Indoor Units (Brazed) (In. / mm)	Liquid (High Pressure)	3/4 / 19.05			
	Gas (Low Pressure)	1-5/8 / 41.28			
From Modules to Twinning Kit (Brazed) (In. / mm)	Liquid (High Pressure)	Refer to Module Data	1/2 / 12.7	1/2 / 12.7	3/8 / 9.52
	Gas (Low Pressure)		7/8 / 22.2	7/8 / 22.2	7/8 / 22.2
Indoor Unit	Total Capacity	50 to 130% of ODUs	Refer to System Data		
	Model / Quantity	P06 ~ P96 / 2 to 50			
Sound Pressure Levels	dB(A)	64.5	60.0	60.0	58.0
Fan		Refer to Module Data			
Type x Quantity			Propeller Fan x 1	Propeller Fan x 1	Propeller Fan x 1
Airflow Rate	CFM		7,950	7,950	7,050
Direct-drive Inverter Motor Output	kW		0.92	0.92	0.92
Compressor Operating Range		4% to 100%	Refer to System Data		
Compressor Type x Quantity		Refer to Module Data	Inverter-driven Scroll Hermetic x 1 for Each Module		
Compressor Motor Output	kW		8.8	8.8	6.8
Compressor Crankcase Heater	kW		0.057	0.057	0.051
Refrigerant		Refer to Module Data	R410A		
Lubricant			MEL32		
High-pressure Protection Device		Refer to Module Data	601 psi / 4.15 MPa		
Compressor / Fan Protection Device			Overheat Protection / Thermal Switch		
Inverter Protection Device			Overheat / Overcurrent Protection		
Blue Fin Anti-corrosion Protection: Cellulose- and polyurethane-resin coating treatment applied to condenser coil that protects it from air contaminants; ≥1µm to 1.5µm thick; Salt Spray Test Method - no unusual rust development to 960 hours.					

** Each individual module requires a separate electrical connection. Reference electrical data for each individual module.

SEACOAST PROTECTION

- External Panel Base, External Front Panel, Pillar: Alloyed galvanized-steel sheets with thermoset polyester-resin coating on internal and external surfaces
- Compressor Cover: Galvanized-aluminum sheets with thermoset polyester-resin coating on internal and external surfaces
- Electrical Parts Box: Galvanized-aluminum sheets with thermoset polyester-resin coating on external surface
- Fan Motor Support: Galvanized-steel sheets with thermoset polyester-resin coating on internal and external surfaces
- Printed Circuit Board: Epoxy resin with polyurethane-coating on external surface

Outdoor Unit: PUHY-P336TSHMU-A-BS – DIMENSIONS

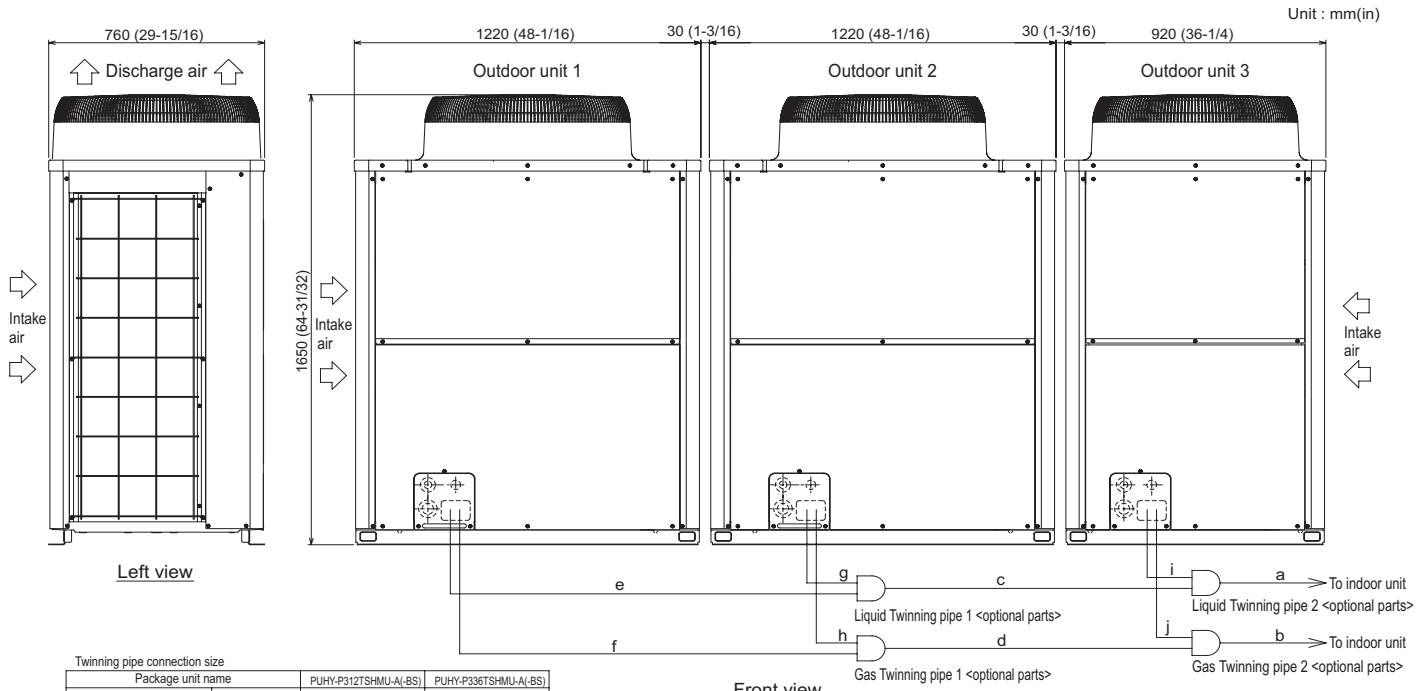

Twinning pipe connection size

Package unit name			PUHY-P312TSHMU-A(-BS)	PUHY-P336TSHMU-A(-BS)
Component unit name	Outdoor unit 1		PUHY-P120THMU-A(-BS)	PUHY-P120THMU-A(-BS)
	Outdoor unit 2		PUHY-P120THMU-A(-BS)	PUHY-P120THMU-A(-BS)
	Outdoor unit 3		PUHY-P72THMU-A(-BS)	PUHY-P96THMU-A(-BS)
Outdoor Twinning Kit (optional parts)			CMY-Y300VBK2	
Indoor unit ~ Twinning pipe 2	Liquid	a	ø19.05 (3/4)	
	Gas	b	ø34.93 (1-3/8)	ø41.28 (1-5/8)
Twinning pipe 1 ~ Twinning pipe 2	Liquid	c	ø19.05 (3/4)	
	Gas	d	ø34.93 (1-3/8)	

	Unit model	Liquid	Gas
		e or g or i	f or h or j
Twinning pipe ~ Outdoor unit	P72	ø9.52 (3/8)	ø19.05 (3/4)
	P96	ø9.52 (3/8)	ø22.2 (7/8)
	P120	ø12.7 (1/2)	ø22.2 (7/8)

Note 1. Connect the pipes as shown in the figure above. Refer to the table above for the pipe size.
2. Twinning pipes should not be tilted more than 15 degrees from the horizontal plane.
Be sure to see the Installation Manual for details of Twinning pipe installation.
3. The pipe section before the Twinning pipe (sections "a", "b", "c" and "d" in the figure) must have at least 500mm (19-11/16) of straight section (*including the straight pipe that is supplied with the Twinning pipe).
4. Only use the Twinning pipes manufactured by Mitsubishi (optional parts).

Twinning Kit: CMY-Y300VBK2

CMY-Y300VBK2 Twinning Kit

For Gas pipe:

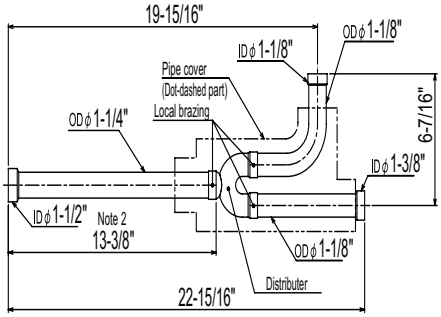

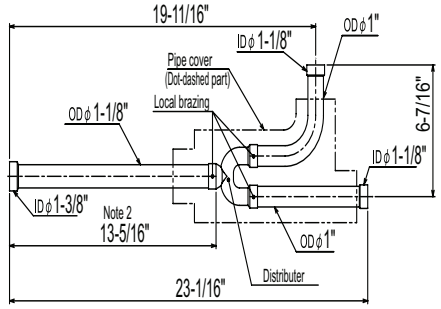

For Liquid pipe:

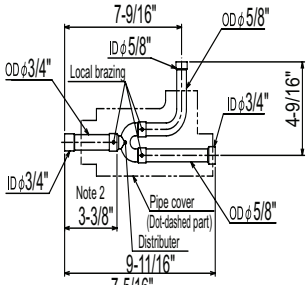

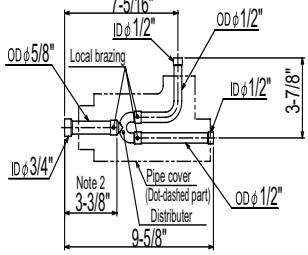

Reducer (Accessory)

Inches

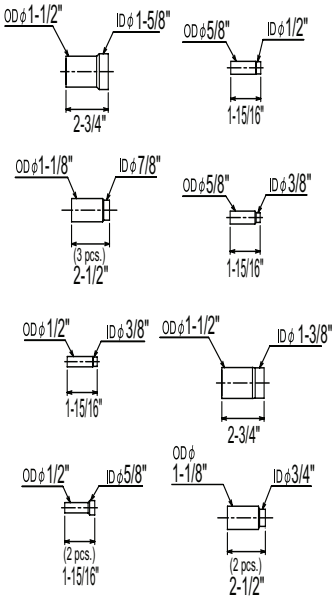

ID: Inner Diameter OD: Outer Diameter

Note 1. Reference the angle of the branch pipe below the fig.

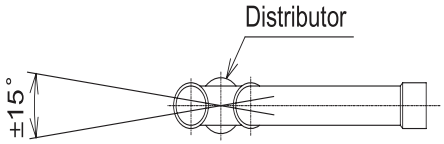

The angle of the branch pipe is within ±15° against the ground.

2. Use the attached pipe to braze the port-opening of the distributor.
3. Pipe diameter is indicated by inside diameter.

For instructions on piping the units together using the twinning kit, see the Installation Manual.

Modules 1 and 2: PUHY-P120THMU-A-BS – DIMENSIONS

Unit : mm(in)

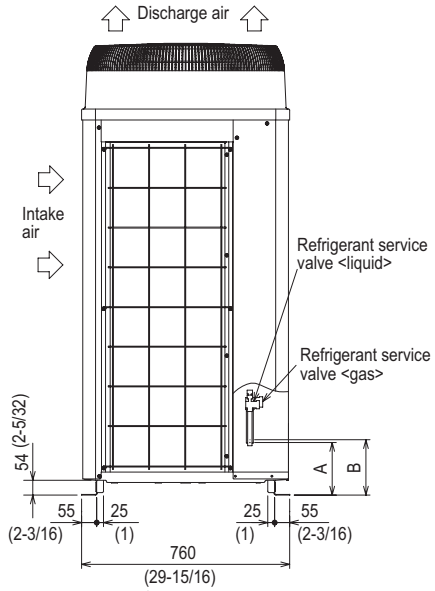

Left side view

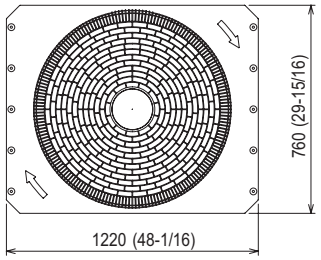

Top view

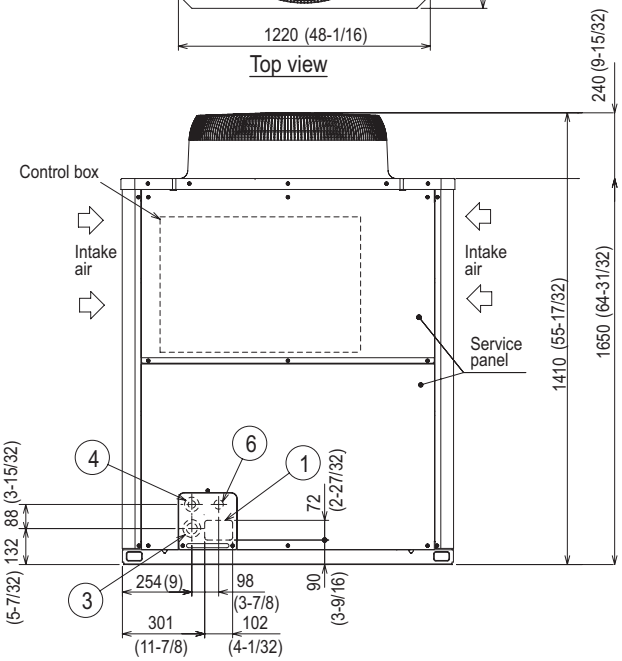

Front view

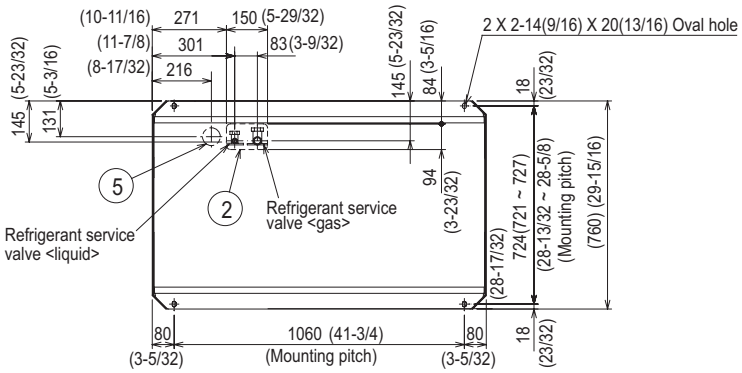

Bottom view

Accessories

● Connecting pipe

Gas	· Elbow	(IDø25.4 [1] X ODø25.4 [1])	1 pc.
	· Pipe	(IDø25.4 [1] X ODø22.2 [7/8])	1 pc.
Liquid	· Pipe	(IDø15.88 [5/8] X ODø9.52 [3/8])	1 pc.
	· Pipe	(IDø15.88 [5/8] X ODø12.7 [1/2])	1 pc.

Note 1. Refer to the Engineering or Installation manual for information regarding necessary clearance around the unit, and installation site requirements.
2. When brazing the pipes, protect the refrigerant service valve by wrapping it with a wet cloth to keep its temperature under 120°C (248°F).

Connecting pipe specifications

Model	Position dimensions for the refrigerant service valve		Connection specifications for the refrigerant service valve *1	
	Liquid	Gas	Liquid	Gas
	A	B		
PUHY-P120THMU (-BS)	158 (6-1/4)	172 (6-25/32)	ø9.52 Brazed (3/8) (ø12.7 Brazed) (1/2) *2 *3	ø22.2 Brazed (7/8)

*1 Use the connecting pipes (for bottom and front pipes) that are supplied.
*2 Indicates dimensions and connection specifications if the unit is used in combination with other outdoor units.
*3 Total length ≧ 40m (131')

NO.	Usage		Specifications
①	For pipes	Front access hole	102 X 72 Knockout hole (4-1/32) (2-27/32)
②		Bottom access hole	150 X 94 Knockout hole (5-29/32)(3-23/32)
③	For wires	Front access hole	ø62.7 or ø34.5 Knockout hole (2-15/32) (1-3/8)
④		Front access hole	ø43.7 or ø22.2 Knockout hole (1-3/4) (7/8)
⑤		Bottom access hole	ø65 Knockout hole (2-9/16)
⑥	For transmission cables	Front access hole	ø34 Knockout hole (1-11/32)

Module 3: PUHY-P96THMU-A-BS – DIMENSIONS

Unit : mm(in)

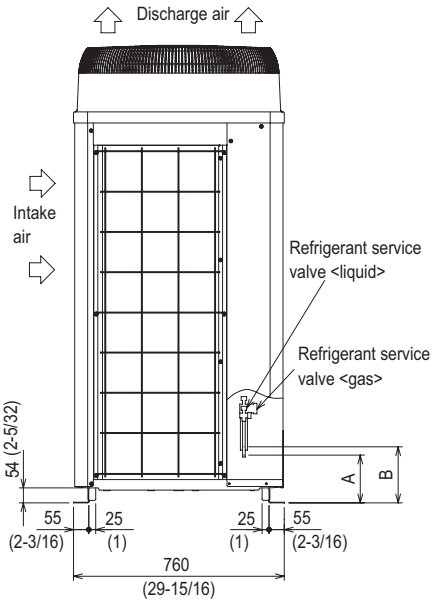

Left side view

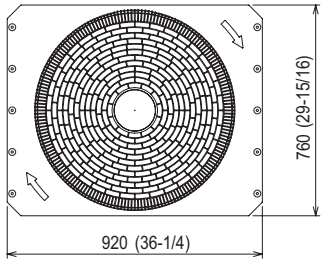

Top view

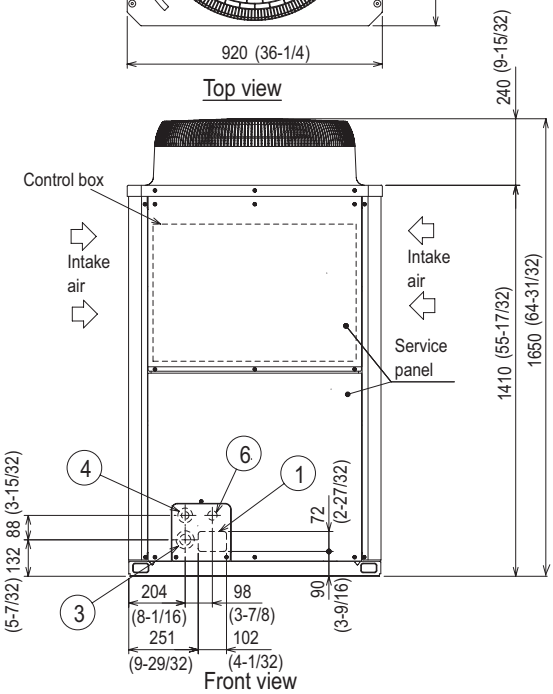

Front view

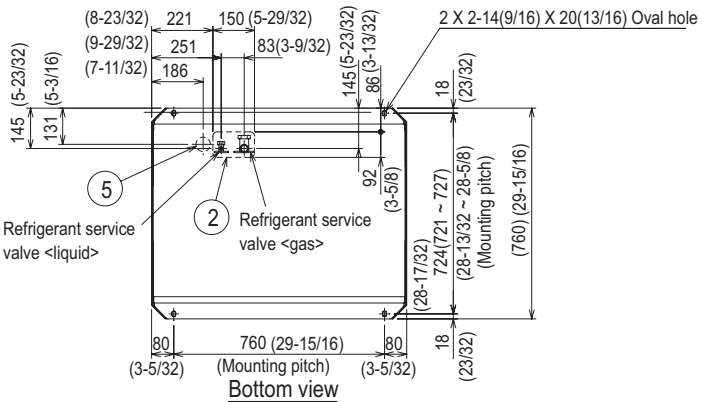

Bottom view

Accessories

●Connecting pipe

Gas	· Elbow	(IDø25.4 [1] X ODø25.4 [1])·····P72, P96	1 pc.
	· Pipe	(IDø25.4 [1] X ODø19.05 [3/4])·····P72	1 pc.
	· Pipe	(IDø25.4 [1] X ODø22.2 [7/8])·····P96	1 pc.
Liquid	· Pipe	(IDø9.52 [3/8] X ODø9.52 [3/8])·····P72, P96	1 pc.

Note 1. Refer to the Engineering or Installation manual for information regarding necessary clearance around the unit, and installation site requirements.
2. When brazing the pipes, protect the refrigerant service valve by wrapping it with a wet cloth to keep its temperature under 120°C (248°F).

Connecting pipe specifications

Model	Position dimensions for the refrigerant service valve		Connection specifications for the refrigerant service valve *1	
	Liquid A	Gas B	Liquid	Gas
PUHY-P72THMU (-BS)	142 (5-19/32)	170 (6-23/32)	ø9.52 Brazed (3/8)	ø19.05 Brazed (3/4)
PUHY-P96THMU (-BS)		172 (6-25/32)	ø9.52 Brazed (3/8) (ø12.7 Brazed)*2 (1/2)	ø22.2 Brazed (7/8)

*1 Use the connecting pipes (for bottom and front pipes) that are supplied.
*2 Total length ≧ 90m (295')

NO.	Usage		Specifications
①	For pipes	Front access hole	102 X 72 Knockout hole (4-1/32) (2-27/32)
②		Bottom access hole	150 X 92 Knockout hole (5-29/32)(3-5/8)
③	For wires	Front access hole	ø62.7 or ø34.5 Knockout hole (2-15/32) (1-3/8)
④		Front access hole	ø43.7 or ø22.2 Knockout hole (1-3/4) (7/8)
⑤		Bottom access hole	ø52 Knockout hole (2-1/16)
⑥	For transmission cables	Front access hole	ø34 Knockout hole (1-11/32)

Certificate Number FM33568

Mitsubishi Electric Air Conditioning & Refrigeration Systems Works acquired ISO 9001 certification under Series 9000 of the International Standard Organization (ISO) based on a review of quality warranties for the production of refrigeration and air conditioning equipment.

ISO Authorization System
The ISO 9000 series is a plant authorization system relating to quality warranties as stipulated by the ISO. ISO 9001 certifies quality warranties based on the "design, development, production, installation and auxiliary services" for products built at an authorized plant.

Mitsubishi Electric Air Conditioning & Refrigeration Systems Works acquired environmental management system standard ISO 14001 certification.

The ISO 14000 series is a set of standards applying to environmental protection set by the International Standard Organization (ISO).

Certificate Number EC97J1227

HVAC Advanced Products Division
Mitsubishi Electric & Electronics USA, Inc.

3400 Lawrenceville Suwanee Rd.
Suwanee, GA 30024
Tele: 678-376-2900 • Fax: 800-889-9904
Toll Free: 800-433-4822 (#4)
www.mehvac.com

Specifications are subject to change without notice.

 © MITSUBISHI ELECTRIC / HVAC 2008