# CITY MULTI® Outdoor Unit: 18-TON PUHY-P216TSHMU-A-BS

MITSUBISHI ELECTRIC

**(Consists of One PUHY-P120THMU-A-BS, One PUHY-P96THMU-A-BS, and One CMY-Y100VBK2 Twinning Kit)**

Job Name: Location:

Drawing Reference: Schedule No.

System No.: Date:

## OUTDOOR VRFZ HEAT PUMP SYSTEM FEATURES

- 3-phase, 208/230V systems
- Modular variable refrigerant flow zoning (VRFZ) systems; smaller capacity units can be piped together to form a single, large-capacity two-pipe system
- Compact size for each outdoor module; can be transported through standard-sized doorways for installation
- Required Twinning Kit allows for easy field piping connection
- Selectable fan static, 0.12 or 0.24"WG external static pressure; factory set to 0"WG
- Maximum Total Refrigerant Piping Length: 3,280'; Maximum Refrigerant Line Length: 541'; Maximum Control Wiring Length: 1,650'
- Connects to CITY MULTI indoor units; controlled via CITY MULTI Controls Network (CMCN)
- External finish: Pre-coated Galvanized-steel Sheets with thermoset polyester-resin
- Operating Temperature Range
  Cooling (Outdoor): 23° ~ 109°F (-5° ~ +43°C) DB
  Heating (Outdoor): -4° ~ +60°F (-20° ~ +16°C) WB

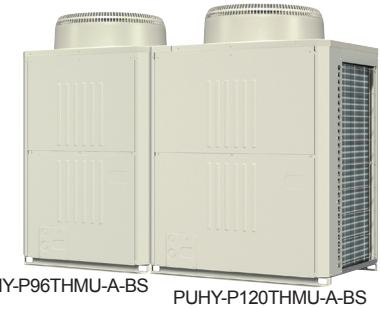

PUHY-P96THMU-A-BS PUHY-P120THMU-A-BS

INVERTER

R410A

## OPTIONAL PARTS

- ☐ Twinning Kit*……CMY-Y100VBK2
- ☐ T-Branch Joint (≤ 72,000 Btu/h)……CMY-Y102S-G2
- ☐ T-Branch Joint (≤ 144,000 Btu/h)……CMY-Y102L-G2
- ☐ T-Branch Joint (≤ 234,000 Btu/h)……CMY-Y202-G2
- ☐ T-Branch Joint (≥ 235,000 Btu/h)……CMY-Y302-G2
- ☐ Header (4-Branch; ≤ 72,000 Btu/h)……CMY-Y104-G
- ☐ Header (8-Branch; ≤ 144,000 Btu/h)……CMY-Y108-G
- ☐ Header (10-Branch; ≤ 234,000 Btu/h)……CMY-Y1010-G

* Twinning Kit is necessary to combine the refrigerant flows of the modules and is included in the outdoor unit set.

| Specifications | | System | Module 1 | Module 2 |
|---|---|---|---|---|
| **Unit Type** | | **PUHY-P216TSHMU-A-BS** | **PUHY-P120THMU-A-BS** | **PUHY-P96THMU-A-BS** |
| **Nominal Cooling Capacity** | **Btu/h** | 216,000 | 120,000 | 96,000 |
| **Nominal Heating Capacity** | **Btu/h** | 228,000 | 120,000 | 108,000 |
| **External Dimensions (H x W x D)** | **In. / mm** | Refer to Module Data | 65 x 48-1/16 x 29-15/16 / 1,650 x 1,220 x 760 | 65 x 36-1/4 x 29-15/16 / 1,650 x 920 x 760 |
| **Net Weight** | **Lbs. / kg** | 982 / 445 | 541 / 245 | 441 / 200 |
| **Electrical Power Requirements** | **Voltage, Phase, Hertz** | Refer to Module Data** | 208/230V, 3-phase, 60Hz | |
| **Cooling Power Input** | **kW** | 19.09 | Refer to System Data | |
| **Heating Power Input** | **kW** | 18.42 | | |
| **Cooling Current (208/230V)** | **A** | 58.8 / 53.2 | Refer to System Data | |
| **Heating Current (208/230V)** | **A** | 56.8 / 51.3 | | |
| **Minimum Circuit Ampacity (MCA)**** | **A** | Refer to Module Data** | 41 / 38** | 35 / 32** |
| **Maximum Overcurrent Protection (MOCP)**** | **A** | Refer to Module Data** | 50 / 50** | 40 / 40** |
| ***Piping Diameter*** | | | Refer to System Data | |
| **From Twinning Kit to Indoor Units (Brazed) (In. / mm)** | **Liquid (High Pressure)** | 5/8 / 15.88 | | |
| | **Gas (Low Pressure)** | 1-1/8 / 28.58 | | |
| **From Modules to Twinning Kit (Brazed) (In. / mm)** | **Liquid (High Pressure)** | Refer to Module Data | 1/2 / 12.7 | 3/8 / 9.52 |
| | **Gas (Low Pressure)** | | 7/8 / 22.2 | 7/8 / 22.2 |
| **Indoor Unit** | **Total Capacity** | 50 to 130% of ODUs | Refer to System Data | |
| | **Model / Quantity** | P06 ~ P96 / 2 to 46 | | |
| **Sound Pressure Levels** | **dB(A)** | 62.5 | 60.0 | 58.0 |
| ***Fan*** | | Refer to Module Data | | |
| **Type x Quantity** | | | Propeller Fan x 1 | Propeller Fan x 1 |
| **Airflow Rate** | **CFM** | | 7,950 | 7,050 |
| **Direct-drive Inverter Motor Output** | **kW** | | 0.92 | 0.92 |
| **Compressor Operating Range** | | 6% to 100% | Refer to System Data | |
| **Compressor Type x Quantity** | | Refer to Module Data | Inverter-driven Scroll Hermetic x 1 | Inverter-driven Scroll Hermetic x 1 |
| **Compressor Motor Output** | **kW** | | 8.8 | 6.8 |
| **Compressor Crankcase Heater** | **kW** | | 0.057 | 0.051 |
| **Refrigerant** | | Refer to Module Data | R410A | |
| **Lubricant** | | | MEL32 | |
| **High-pressure Protection Device** | | Refer to Module Data | 601 psi / 4.15 MPa | 601 psi / 4.15 MPa |
| **Compressor / Fan Protection Device** | | | Overheat Protection / Thermal Switch | Overheat Protection / Thermal Switch |
| **Inverter Protection Device** | | | Overheat / Overcurrent Protection | Overheat / Overcurrent Protection |
| **Blue Fin Anti-corrosion Protection:** Cellulose- and polyurethane-resin coating treatment applied to condenser coil that protects it from air contaminants; ≥1μm to 1.5μm thick; Salt Spray Test Method - no unusual rust development to 960 hours. | | | | |

** Each individual module requires a separate electrical connection. Reference electrical data for each individual module.

# SEACOAST PROTECTION

- External Panel Base, External Front Panel, Pillar: Alloyed galvanized-steel sheets with thermoset polyester-resin coating on internal and external surfaces
- Compressor Cover: Galvanized-aluminum sheets with thermoset polyester-resin coating on internal and external surfaces
- Electrical Parts Box: Galvanized-aluminum sheets with thermoset polyester-resin coating on external surface
- Fan Motor Support: Galvanized-steel sheets with thermoset polyester-resin coating on internal and external surfaces
- Printed Circuit Board: Epoxy resin with polyurethane-coating on external surface

# Outdoor Unit: PUHY-P216TSHMU-A-BS – DIMENSIONS

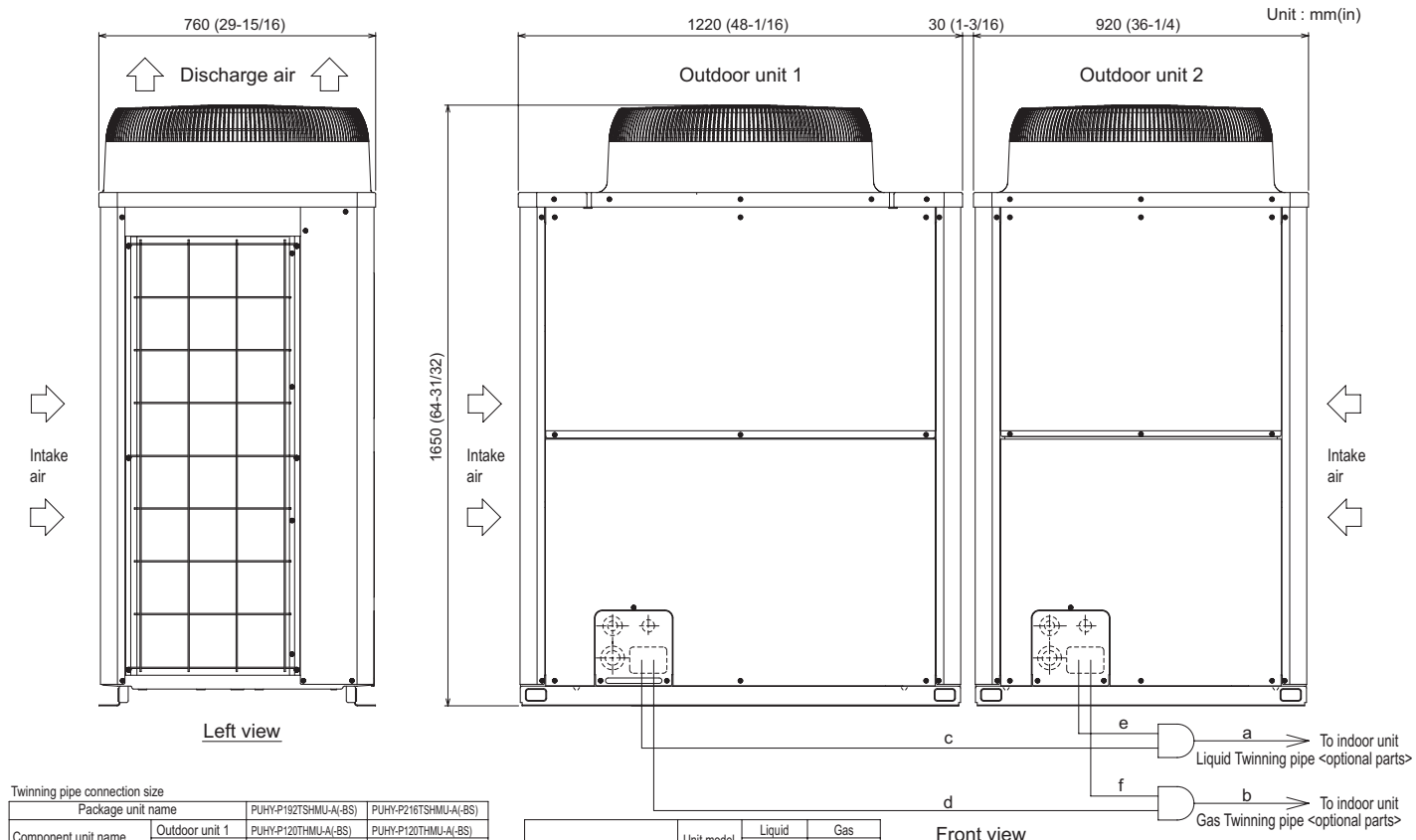


Twinning pipe connection size

| Package unit name | | | PUHY-P192TSHMU-A(-BS) | PUHY-P216TSHMU-A(-BS) |
|---|---|---|---|---|
| Component unit name | Outdoor unit 1 | | PUHY-P120THMU-A(-BS) | PUHY-P120THMU-A(-BS) |
| | Outdoor unit 2 | | PUHY-P72THMU-A(-BS) | PUHY-P96THMU-A(-BS) |
| Outdoor Twinning Kit (optional parts) | | | CMY-Y100VBK2 | |
| Indoor unit ~ Twinning pipe | Liquid | a | ø15.88 (5/8) | |
| | Gas | b | ø28.58 (1-1/8) | |

| | Unit model | Liquid | Gas |
|---|---|---|---|
| | | c or e | d or f |
| Twinning pipe ~ Outdoor unit | P72 | ø9.52 (3/8) | ø19.05 (3/4) |
| | P96 | ø9.52 (3/8) | ø22.2 (7/8) |
| | P120 | ø12.7 (1/2) | ø22.2 (7/8) |

Note 1. Connect the pipes as shown in the figure above. Refer to the table above for the pipe size.
2. Twinning pipes should not be tilted more than 15 degrees from the horizontal plane.
Be sure to see the Installation Manual for details of Twinning pipe installation.
3. The pipe section before the Twinning pipe (sections "a" and "b" in the figure) must have at least 500mm (19-11/16) of straight section (*including the straight pipe that is supplied with the Twinning pipe).
4. Only use the Twinning pipes manufactured by Mitsubishi (optional parts).

# Twinning Kit: CMY-Y100VBK2

CMY-Y100VBK2

Ref.: CMY_Y100VBK2_EXD_EUDB_SI
Inches (mm)

For Gas pipe:

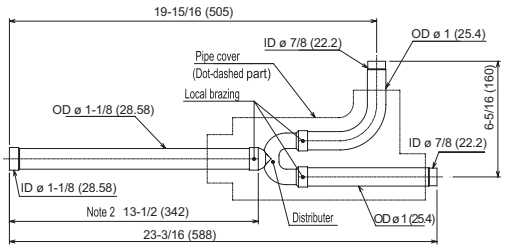


For Liquid pipe:

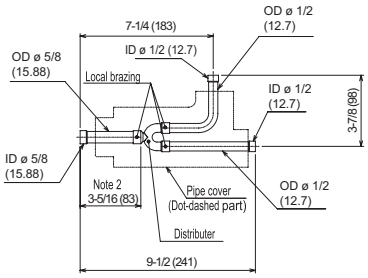


<Reducer Pipe (Accessory)>

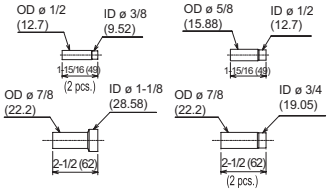


ID: Inner Diameter OD: Outer Diameter

Note 1. Reference the angle of the branch pipe below the fig.

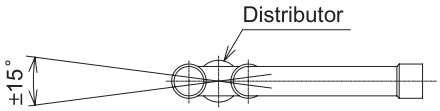


The angle of the branch pipe is within ±15° against the ground.

2. Use the attached pipe to braze the port-opening of the distributor.
3. Pipe diameter is indicated by inside diameter.

For instructions on piping the units together using the twinning kit, see the Installation Manual.

# Module 1: PUHY-P120THMU-A-BS – DIMENSIONS

Unit : mm(in)

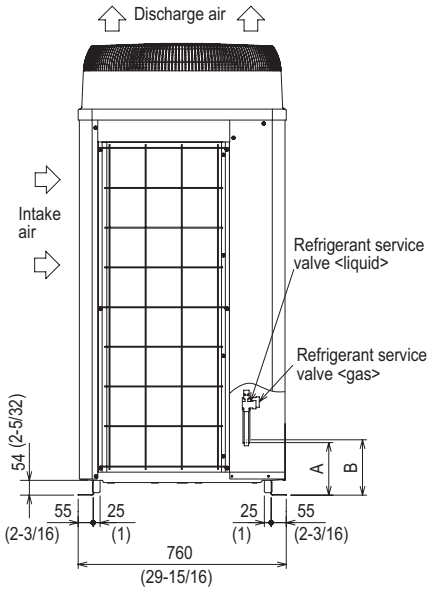


Left side view

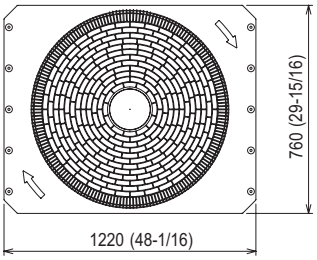


Top view

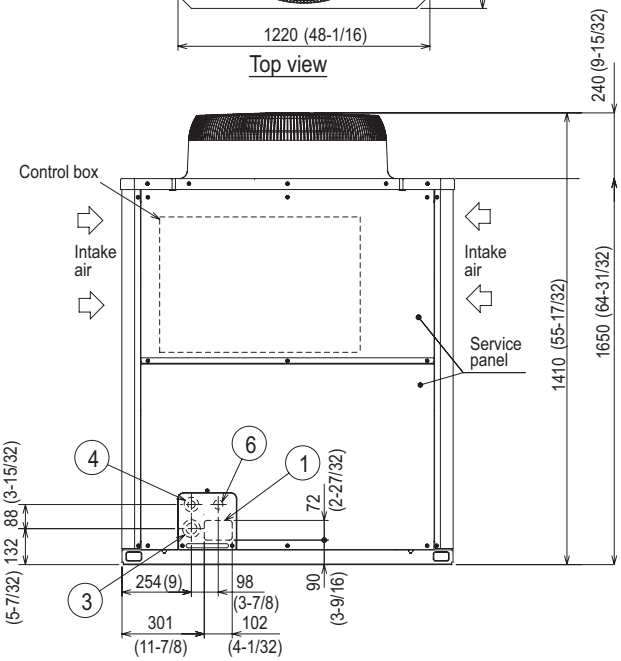


Front view

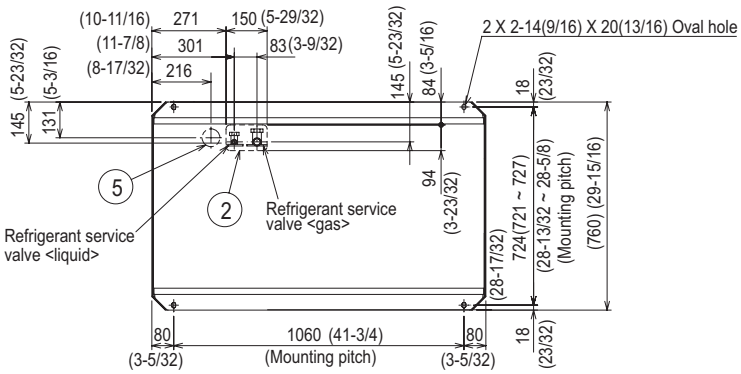


Bottom view

Accessories

- Connecting pipe

| | | | |
|---|---|---|---|
| Gas | · Elbow | (IDø25.4 [1] X ODø25.4 [1]) | 1 pc. |
| | · Pipe | (IDø25.4 [1] X ODø22.2 [7/8]) | 1 pc. |
| Liquid | · Pipe | (IDø15.88 [5/8] X ODø9.52 [3/8]) | 1 pc. |
| | · Pipe | (IDø15.88 [5/8] X ODø12.7 [1/2]) | 1 pc. |

Note 1. Refer to the Engineering or Installation manual for information regarding necessary clearance around the unit, and installation site requirements.
2. When brazing the pipes, protect the refrigerant service valve by wrapping it with a wet cloth to keep its temperature under 120°C (248°F).

Connecting pipe specifications

| Model | Position dimensions for the refrigerant service valve | | Connection specifications for the refrigerant service valve *1 | |
|---|---|---|---|---|
| | Liquid | Gas | Liquid | Gas |
| | A | B | | |
| PUHY-P120THMU (-BS) | 158 (6-1/4) | 172 (6-25/32) | ø9.52 Brazed (3/8) (ø12.7 Brazed) (1/2) *2 *3 | ø22.2 Brazed (7/8) |

*1 Use the connecting pipes (for bottom and front pipes) that are supplied.
*2 Indicates dimensions and connection specifications if the unit is used in combination with other outdoor units.
*3 Total length ≧ 40m (131')

| NO. | Usage | | Specifications |
|---|---|---|---|
| ① | For pipes | Front access hole | 102 X 72 Knockout hole (4-1/32) (2-27/32) |
| ② | | Bottom access hole | 150 X 94 Knockout hole (5-29/32)(3-23/32) |
| ③ | For wires | Front access hole | ø62.7 or ø34.5 Knockout hole (2-15/32) (1-3/8) |
| ④ | | Front access hole | ø43.7 or ø22.2 Knockout hole (1-3/4) (7/8) |
| ⑤ | | Bottom access hole | ø65 Knockout hole (2-9/16) |
| ⑥ | For transmission cables | Front access hole | ø34 Knockout hole (1-11/32) |

# Module 2: PUHY-P96THMU-A-BS – DIMENSIONS

Unit : mm(in)

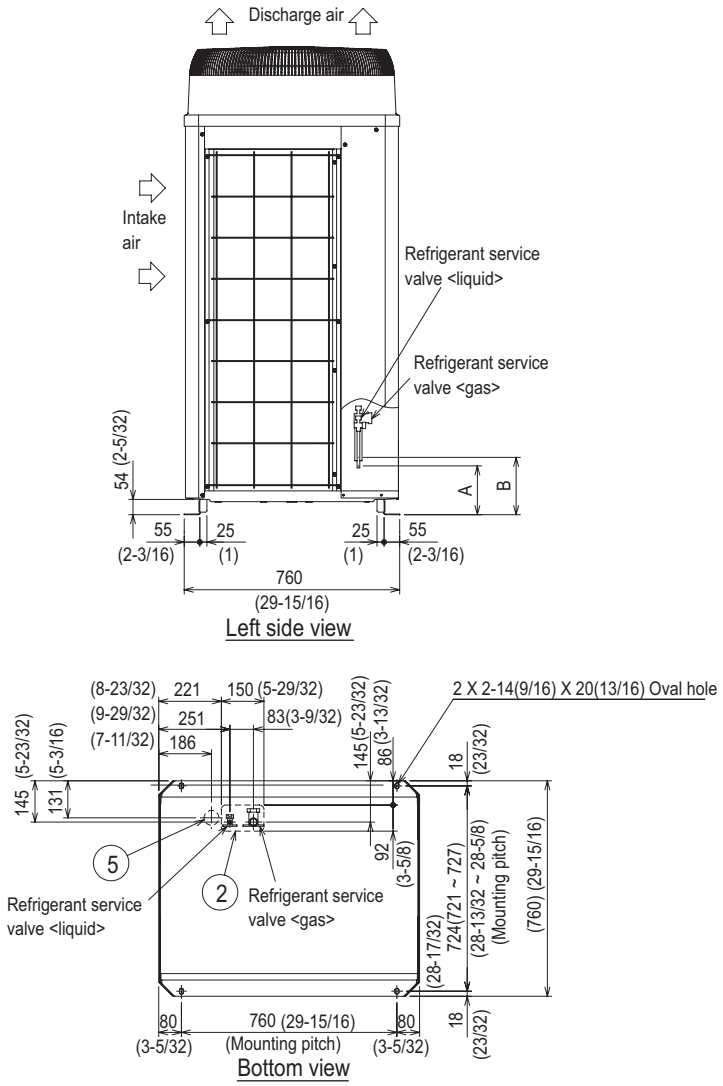


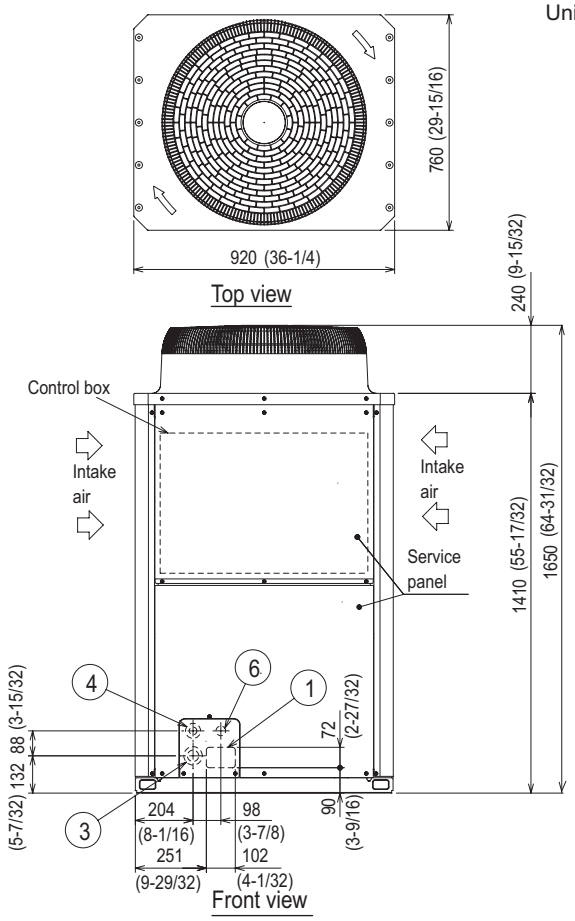


Accessories

●Connecting pipe

| | | | | |
|---|---|---|---|---|
| Gas | · Elbow | (IDø25.4 [1] X ODø25.4 [1])·····P72, P96 | 1 pc. |
| | · Pipe | (IDø25.4 [1] X ODø19.05 [3/4])·····P72 | 1 pc. |
| | · Pipe | (IDø25.4 [1] X ODø22.2 [7/8])·····P96 | 1 pc. |
| Liquid | · Pipe | (IDø9.52 [3/8] X ODø9.52 [3/8])·····P72, P96 | 1 pc. |

Note 1. Refer to the Engineering or Installation manual for information regarding necessary clearance around the unit, and installation site requirements.
2. When brazing the pipes, protect the refrigerant service valve by wrapping it with a wet cloth to keep its temperature under 120°C (248°F).

Connecting pipe specifications

| Model | Position dimensions for the refrigerant service valve | | Connection specifications for the refrigerant service valve *1 | |
|---|---|---|---|---|
| | Liquid A | Gas B | Liquid | Gas |
| PUHY-P72THMU (-BS) | 142 (5-19/32) | 170 (6-23/32) | ø9.52 Brazed (3/8) | ø19.05 Brazed (3/4) |
| PUHY-P96THMU (-BS) | | 172 (6-25/32) | ø9.52 Brazed (3/8) (ø12.7 Brazed)*2 (1/2) | ø22.2 Brazed (7/8) |

*1 Use the connecting pipes (for bottom and front pipes) that are supplied.
*2 Total length ≧ 90m (295')

| NO. | Usage | | Specifications |
|---|---|---|---|
| ① | For pipes | Front access hole | 102 X 72 Knockout hole (4-1/32) (2-27/32) |
| ② | | Bottom access hole | 150 X 92 Knockout hole (5-29/32)(3-5/8) |
| ③ | For wires | Front access hole | ø62.7 or ø34.5 Knockout hole (2-15/32) (1-3/8) |
| ④ | | Front access hole | ø43.7 or ø22.2 Knockout hole (1-3/4) (7/8) |
| ⑤ | | Bottom access hole | ø52 Knockout hole (2-1/16) |
| ⑥ | For transmission cables | Front access hole | ø34 Knockout hole (1-11/32) |

Certificate Number FM33568

**Mitsubishi Electric Air Conditioning & Refrigeration Systems Works acquired ISO 9001 certification under Series 9000 of the International Standard Organization (ISO) based on a review of quality warranties for the production of refrigeration and air conditioning equipment.**

**ISO Authorization System**
**The ISO 9000 series is a plant authorization system relating to quality warranties as stipulated by the ISO. ISO 9001 certifies quality warranties based on the "design, development, production, installation and auxiliary services" for products built at an authorized plant.**

**Mitsubishi Electric Air Conditioning & Refrigeration Systems Works acquired environmental management system standard ISO 14001 certification.**

**The ISO 14000 series is a set of standards applying to environmental protection set by the International Standard Organization (ISO).**

**Certificate Number EC97J1227**


**HVAC Advanced Products Division**
Mitsubishi Electric & Electronics USA, Inc.

3400 Lawrenceville Suwanee Rd.
Suwanee, GA 30024
Tele: 678-376-2900 • Fax: 800-889-9904
Toll Free: 800-433-4822 (#4)
www.mehvac.com


**Specifications are subject to change without notice.**

 © MITSUBISHI ELECTRIC / HVAC 2008