MITSUBISHI ELECTRIC
HVAC Advanced Products Division

Mr. SLIM
Split-ductless A/C and Heat Pumps

SUBMITTAL DATA: PLA-A36AA & PUY-A36NHA

36,000 Btu/h CEILING CASSETTE AIR-CONDITIONING SYSTEM

Job Name: Location: Date:

Purchaser: Engineer:

Submitted to: For ☐ Reference ☐ Approval ☐ Construction

Unit Designation: Schedule No.:

GENERAL FEATURES

- Limited Warranty – One year on parts and defects, six years on compressor
- Compact, side discharge outdoor unit
- Quiet operation – indoor and outdoor units
- Auto-restart following a power outage
- Self-check function – onboard diagnostics
- Advanced microprocessor control
- Built-in drain lift mechanism for condensate removal
- Zone control
- Hard-wired, wall-mounted, remote controller (PAR-21MAA)
- 2, 3, or 4 way air flow selection / 6" round or 4 X 14" rectangular branch duct connection
- 4" ventilation air inlet
- Washable filter

OPTIONAL FEATURES

- Multi-function casement
- High efficiency filter element
- Air outlet shutter plate(s)
- Wireless Remote Controller kit
- M-Net adapter
- Wind Baffle
- Air outlet guide

COOLING

Rated capacity . . . . . .36,000 Btu/h
Minimum capacity . . . . . 12,000 Btu/h
SEER . . . . . .13.1 Btu/h/W
Total input. . . . . .4100 W
Power supply . . . . . .208 / 230V, 1 Phase, 60 Hz
Breaker size . . . . . 30 A

VOLTAGE

Indoor - Outdoor S1-S2 . . . . . AC 208/230V
Indoor - Outdoor S2-S3 . . . . . .DC 24V
Indoor - Remote Controller . . . . . .DC

NOTES :

*1. Rating conditions (cooling)-indoor : D.B. 80°F, W.B. 67°F
outdoor : D.B. 95°F, W.B. 75°F.

OPERATING RANGE

		Indoor intake air temp.	Outdoor intake air temp.
Cooling	Max	D.B. 95°F, W.B. 71°F	D.B. 115°F
	Min	D.B. 67°F, W.B. 57°F	D.B. 0°F *

* With wind baffle installed. If not installed, the minimum temperature will be 23°FDB.

Notes:

Indoor Unit: PLA-A36AA

Remote Controller: PAR-21MAA

Outdoor Unit: PUY-A36NHA

INDOOR UNIT

MCA . . . . . 2 A
Fan motor . . . . . 1.25 F.L.A.
Fan motor output . . . . . 110 W
Airflow (Lo-M1-M2-Hi) . . . . . 710-810-920-990 Dry CFM
670-770-880-950 Wet CFM
Sound level (Lo-M1-M2-Hi) . . . . . 33-36-39-41 dB(A)

DIMENSIONS		UNIT	PANEL
inches	W	33-1/16	37-3/8
	D	33-1/16	37-3/8
	H	11-3/4	1-3/16
mm	W	840	950
	D	840	950
	H	298	30

WEIGHT (unit/panel)

Pounds . . . . . .66 / 11
Kg . . . . . .30 / 5
Field drain pipe size I.D. (inches/mm) . . . . . .1 / 25.4
Wall-mounted remote controller PAR-21MAA
(see data submittal sheet)

OUTDOOR UNIT

Compressor . . . . . DC inverter/twin rotary
MCA 25
Fan motor . . . . . 0.75 F.L.A.
Sound level. . . . . .48 dB(A)

DIMENSIONS		INCHES	MM
	W	37-3/8	950
	D	13 + 1-3/19	330 + 30
	H	37-1/8	943

Weight (lbs/Kg) . . . . . .163 / 74
Refrigerant type R410A
Refrigerant pipe size O.D. (inches/mm)
gas side . . . . . .5/8 / 15.88
liquid side . . . . . 3/8 / 9.52
Max. refrigerant pipe length (ft/m) . . . . . 165 / 50
Max. refrigerant pipe height difference (ft/m) . . . . . .100 / 30
Connection method . . . . . .flared

R410A

INVERTER

DIMENSIONS: PLA-A36AA & PUY-A36NHA

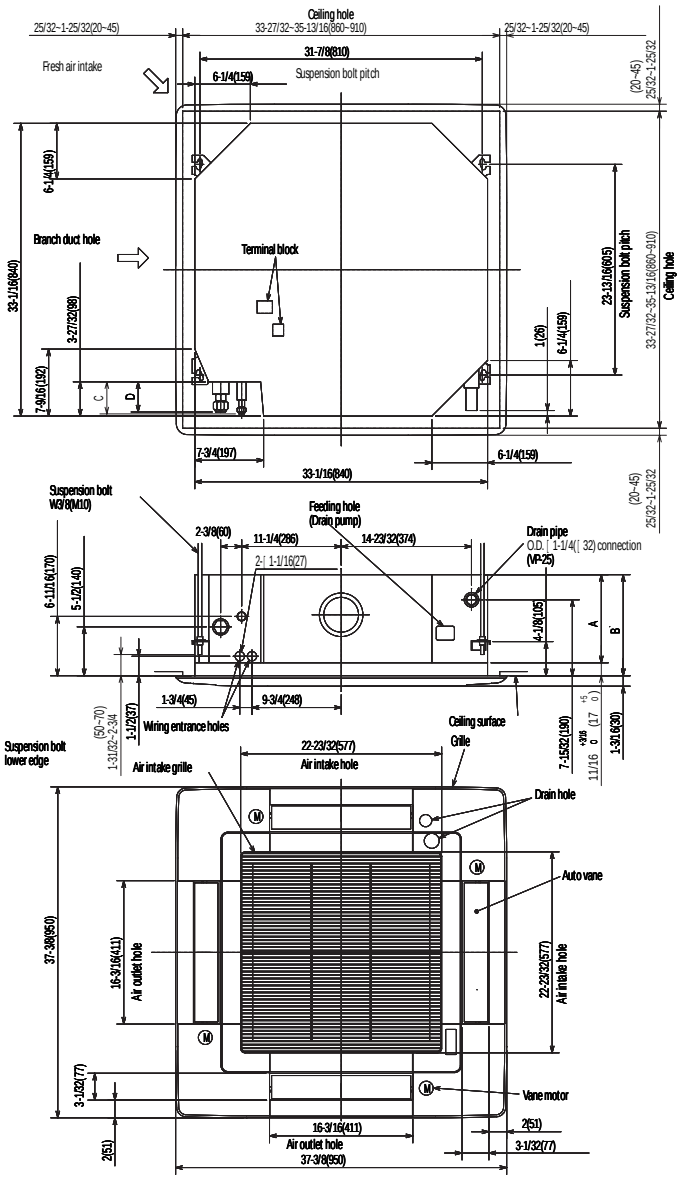

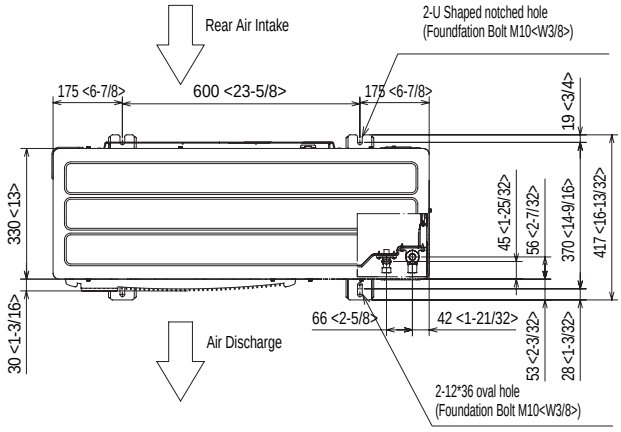

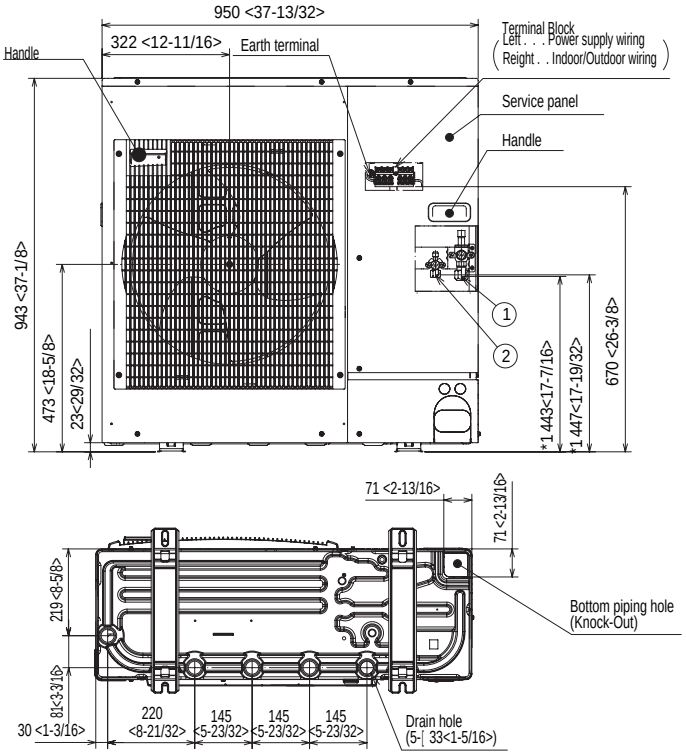

ARI Standard 210/240 UHP

HVAC Advanced Products Division
Mitsubishi Electric & Electronics USA, Inc.

3400 Lawrenceville Suwanee Rd
Suwanee, GA 30024
Tele: 678-376-2900 • Fax: 800-889-9904
Toll Free: 800-433-4822 (#3)
www.mehvac.com

Specifications are subject to change without notice.

 © MITSUBISHI ELECTRIC / HVAC 2006