Changes for the Better

MITSUBISHI ELECTRIC

SPLIT-TYPE, HEAT PUMP AIR CONDITIONERS

May 2014
No.OCH467
REVISED EDITION-C

HFC utilized
R410A

SERVICE MANUAL

R410A

Outdoor unit

[Model Names]	[Service Ref.]
SUZ-KA09NA	SUZ-KA09NA.TH
SUZ-KA12NA	SUZ-KA12NA.TH
SUZ-KA15NA	SUZ-KA15NA.TH
SUZ-KA18NA	SUZ-KA18NA.TH

Revision:
- Modified some contents in 10.TROUBLESHOOTING in REVISED EDITION-C.
- Some other descriptions have been also modified.

- Please void OCH467 REVISED EDITIN-B.

Note:
- This service manual describes service data of the outdoor units only.
- RoHS compliant products have <G> mark on the spec name plate.

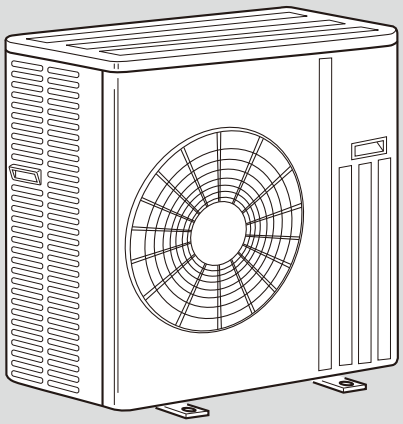

SUZ-KA18NA.TH

CONTENTS

1. COMBINATION OF INDOOR AND OUTDOOR UNITS···2
2. PARTS NAMES AND FUNCTIONS·····2
3. SPECIFICATION·····3
4. OUTLINES AND DIMENSIONS·····4
5. WIRING DIAGRAM····· 5
6. REFRIGERANT SYSTEM DIAGRAM····· 8
7. DATA····· 11
8. ACTUATOR CONTROL·····13
9. SERVICE FUNCTION·····14
10. TROUBLESHOOTING·····14
11. FUNCTION SETTING····· 32
12. DISASSEMBLY INSTRUCTIONS·····35

PARTS CATALOG (OCB467)

1 COMBINATION OF INDOOR AND OUTDOOR UNITS

	Indoor unit		Outdoor unit Heat pump type SUZ-			
	Service Ref.	Service Manual No.	KA09NA.TH	KA12NA.TH	KA15NA.TH	KA18NA.TH
Heat pump without electric heater	SEZ-KD09NA4.TH	HWE08020	○	—	—	—
	SEZ-KD12NA4.TH		—	○	—	—
	SEZ-KD15NA4.TH		—	—	○	—
	SEZ-KD18NA4.TH		—	—	—	○
	SLZ-KA09NA.TH	OCH487 OCB487	○	—	—	—
	SLZ-KA12NA.TH		—	○	—	—
	SLZ-KA15NA.TH		—	—	○	—

2 PARTS NAMES AND FUNCTIONS

SUZ-KA09NA SUZ-KA12NA SUZ-KA15NA

OUTDOOR UNIT

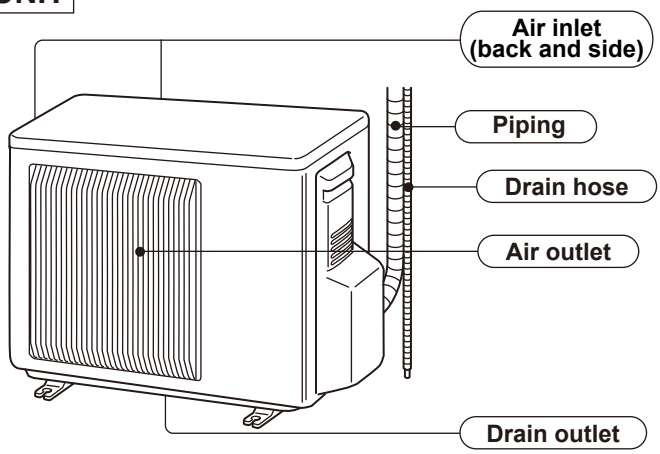

SUZ-KA18NA

OUTDOOR UNIT

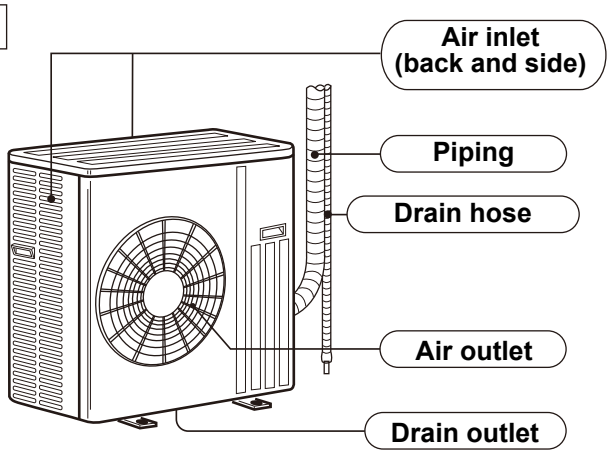

3 SPECIFICATION

Outdoor unit model			SUZ-KA09NA	SUZ-KA12NA	SUZ-KA15NA	SUZ-KA18NA
Power supply	V , phase , Hz		208/230 , 1 , 60			
Max. fuse size (time delay)		A	15			
Min. circuit ampacity		A	12	12	12	14
Fan motor		F.L.A	0.50			0.93
Compressor	Model		KNB073FQDHC	KNB092FQAHC	SNB130FQBH	
		R.L.A	6.6	6.6	7.4	10.0
		L.R.A	8.2	8.2	9.3	12.5
	Refrigeration oil oz. (Model)		10.8 (NEO22)		15.2 (NEO22)	
Refrigerant control			Linear expansion valve			
Sound level*1	Cooling	dB(A)	46	49	49	54
	Heating	dB(A)	50	51	51	56
Defrost method			Reverse cycle			
Dimensions	W	in	31-1/2			33-1/16
	D	in	11-1/4			13
	H	in	21-5/8			33-7/16
Weight		lb	66	77	80	119
External finish			Munsell 3Y 7.8/1.1			
Control voltage (by built-in transformer)		VDC	12 - 24			
Refrigerant piping			Not supplied			
Refrigerant pipe size (Min. wall thickness)	Liquid	in	1/4 (0.0315)			
	Gas	in	3/8 (0.0315)		1/2 (0.0315)	
Connection method	Indoor		Flared			
	Outdoor		Flared			
Between the indoor & outdoor units	Height difference	ft	40			50
	Piping length	ft	65			100
Refrigerant charge (R410A)			1 lb. 16 oz.	2 lb. 9 oz.		3 lb. 16 oz.

Note: Test conditions are based on AHRI 210/240.
*1 Rating conditions (Cooling) — Indoor: 80˚F D.B., 67˚F W.B., Outdoor: 95˚F D.B., (75˚F W.B.)
(Heating) — Indoor: 70˚F D.B., 60˚F W.B., Outdoor: 47˚F D.B., 43˚F W.B.

OPERATING RANGE

(1) POWER SUPPLY

	Rated voltage	Guaranteed voltage (V)
Outdoor unit	208/230 V 1 phase 60 Hz	Min. 187 — 208 — 230 — Max. 253

4 OUTLINES AND DIMENSIONS

SUZ-KA09NA SUZ-KA12NA SUZ-KA15NA

Unit: inch

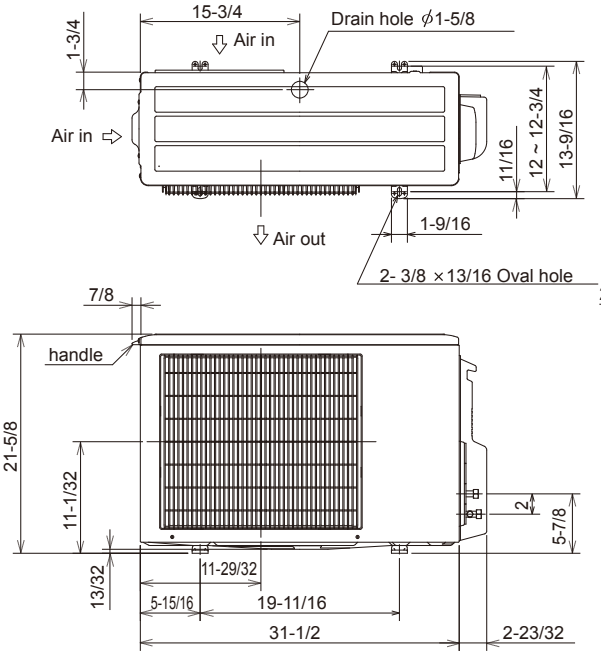

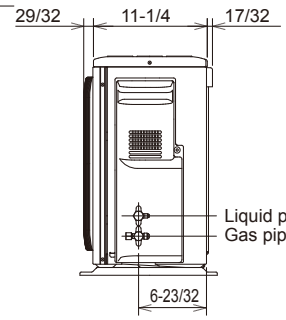

Liquid pipe :1/4 (flared)
Gas pipe :3/8 (flared) **(KA09/12)**
1/2 (flared) **(KA15)**

REQUIRED SPACE

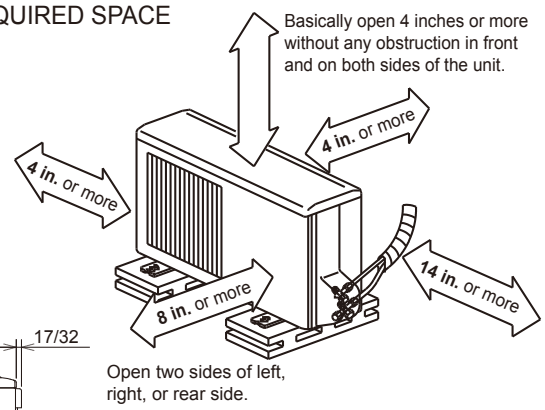

SUZ-KA18NA

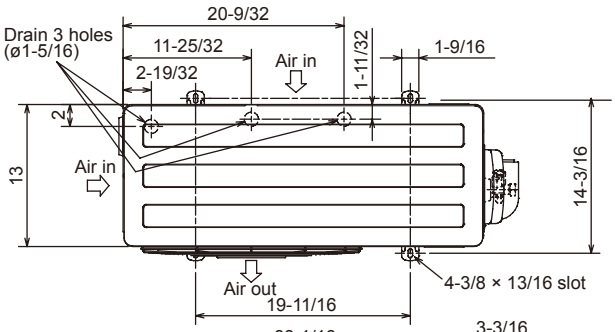

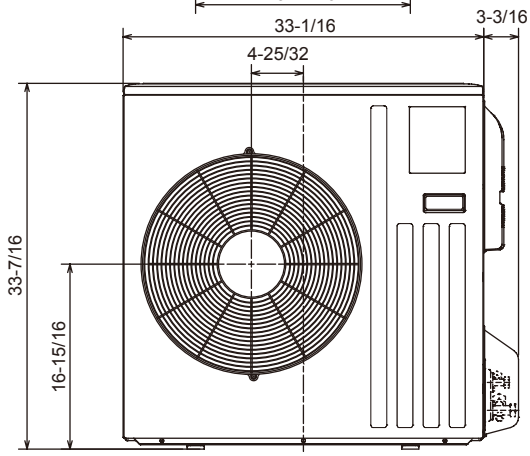

REQUIRED SPACE

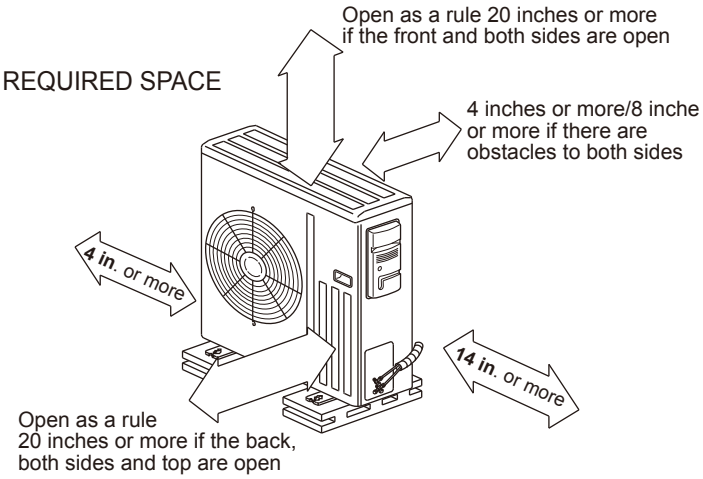

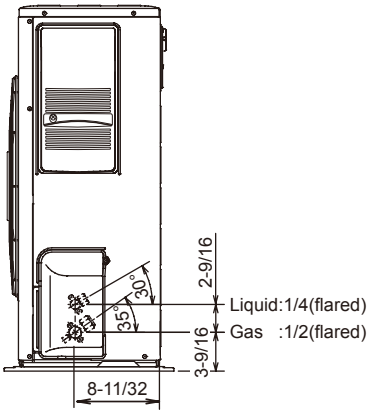

5 WIRING DIAGRAM

SUZ-KA09NA SUZ-KA12NA

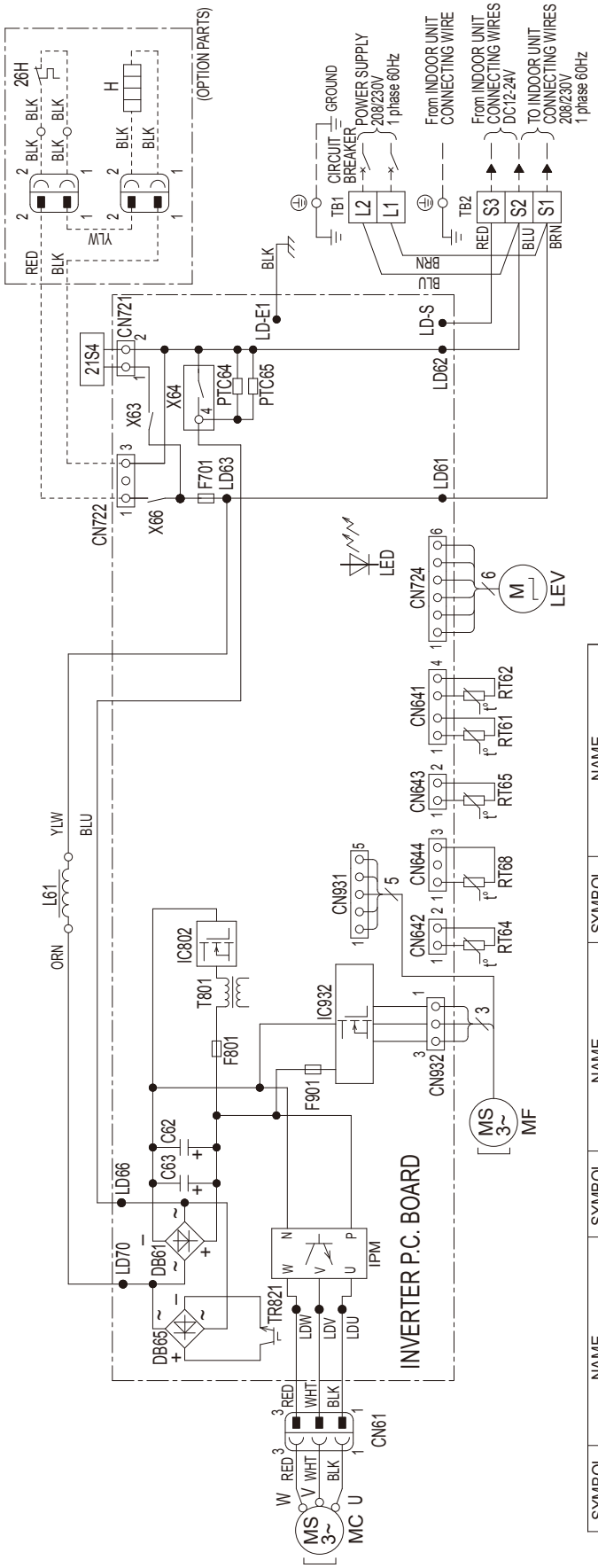

NOTES:
1. About the indoor side electric wiring refer to the indoor unit electric wiring diagram for servicing.
2. Use copper conductors only. (For field wiring).

SYMBOL	NAME	SYMBOL	NAME	SYMBOL	NAME
C62,C63	SMOOTHING CAPACITOR	LEV	EXPANSION VALVE COIL	RT68	OUTDOOR HEAT EXCHANGER TEMP. THERMISTOR.
DB61,DB65	DIODE MODULE	MC	COMPRESSOR		
F701,F801,F901	FUSE (T3.15AL250V)	MF	FAN MOTOR	TB1,TB2	TERMINAL BLOCK
H	DEFROST HEATER(OPTION PARTS)	PTC64,PTC65	CIRCUIT PROTECTION	TR821	SWITCHING POWER TRANSISTOR
IC802	INTELLIGENT POWER DEVICE	RT61	DEFROST THERMISTOR	T801	TRANSFORMER
IPM,IC932	INTELLIGENT POWER MODULE	RT62	DISCHARGE TEMP.THERMISTOR	X63,X64,X66	RELAY
L61	REACTOR	RT64	FIN TEMP.THERMISTOR	21S4	REVERSING VALVE COIL
LED	LED	RT65	AMBIENT TEMP.THERMISTOR	26H	HEATER PROTECTOR(OPTION PARTS)

SUZ-KA15NA

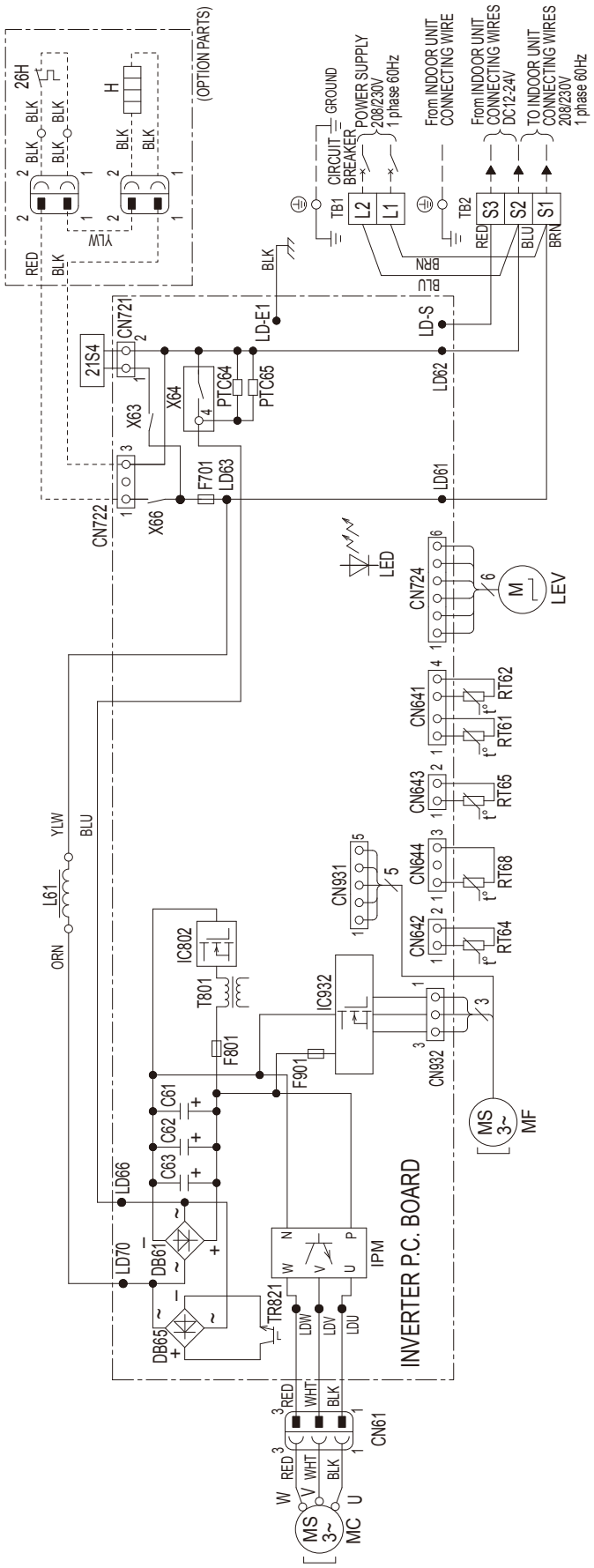

NOTES:
1. About the indoor side electric wiring refer to the indoor unit electric wiring diagram for servicing.
2. Use copper conductors only. (For field wiring).

SYMBOL	NAME	SYMBOL	NAME	SYMBOL	NAME
C61,C62,C63	SMOOTHING CAPACITOR	LEV	EXPANSION VALVE COIL	RT68	OUTDOOR HEAT EXCHANGER TEMP. THERMISTOR.
DB61,DB65	DIODE MODULE	MC	COMPRESSOR		
F701,F801,F901	FUSE (T3.15AL250V)	MF	FAN MOTOR	TB1,TB2	TERMINAL BLOCK
H	DEFROST HEATER(OPTION PARTS)	PTC64,PTC65	CIRCUIT PROTECTION	TR821	SWITCHING POWER TRANSISTOR
IC802	INTELLIGENT POWER DEVICE	RT61	DEFROST THERMISTOR	T801	TRANSFORMER
IPM,IC932	INTELLIGENT POWER MODULE	RT62	DISCHARGE TEMP.THERMISTOR	X63,X64,X66	RELAY
L61	REACTOR	RT64	FIN TEMP.THERMISTOR	21S4	REVERSING VALVE COIL
LED	LED	RT65	AMBIENT TEMP.THERMISTOR	26H	HEATER PROTECTOR(OPTION PARTS)

SUZ-KA18NA

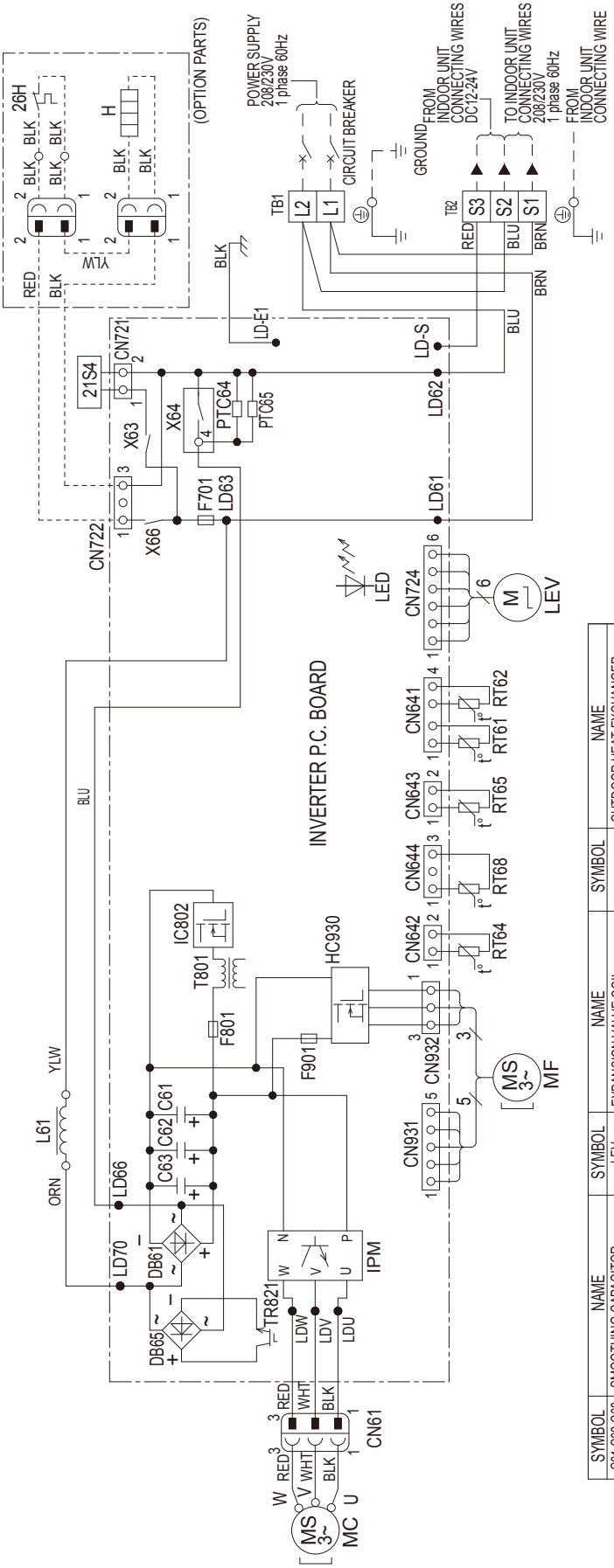

SYMBOL	NAME	SYMBOL	NAME	SYMBOL	NAME
C61,C62,C63	SMOOTHING CAPACITOR	LEV	EXPANSION VALVE COIL	RT68	OUTDOOR HEAT EXCHANGER TEMP. THERMISTOR.
DB61,DB65	DIODE MODULE	MC	COMPRESSOR		
F701,F801,F901	FUSE (T3.15AL250V)	MF	FAN MOTOR	TB1,TB2	TERMINAL BLOCK
H	DEFROST HEATER(OPTION PARTS)	PTC64,PTC65	CIRCUIT PROTECTION	TR821	SWITCHING POWER TRANSISTOR
IC802	INTELLIGENT POWER DEVICE	RT61	DEFROST THERMISTOR	T801	TRANSFORMER
IPM, HC930	INTELLIGENT POWER MODULE	RT62	DISCHARGE TEMP.THERMISTOR	X63,X64,X66	RELAY
L61	REACTOR	RT64	FIN TEMP.THERMISTOR	21S4	REVERSING VALVE COIL
LED	LED	RT65	AMBIENT TEMP.THERMISTOR	26H	HEATER PROTECTOR(OPTION PARTS)

6 REFRIGERANT SYSTEM DIAGRAM

SUZ-KA09NA

Unit: inch (mm)

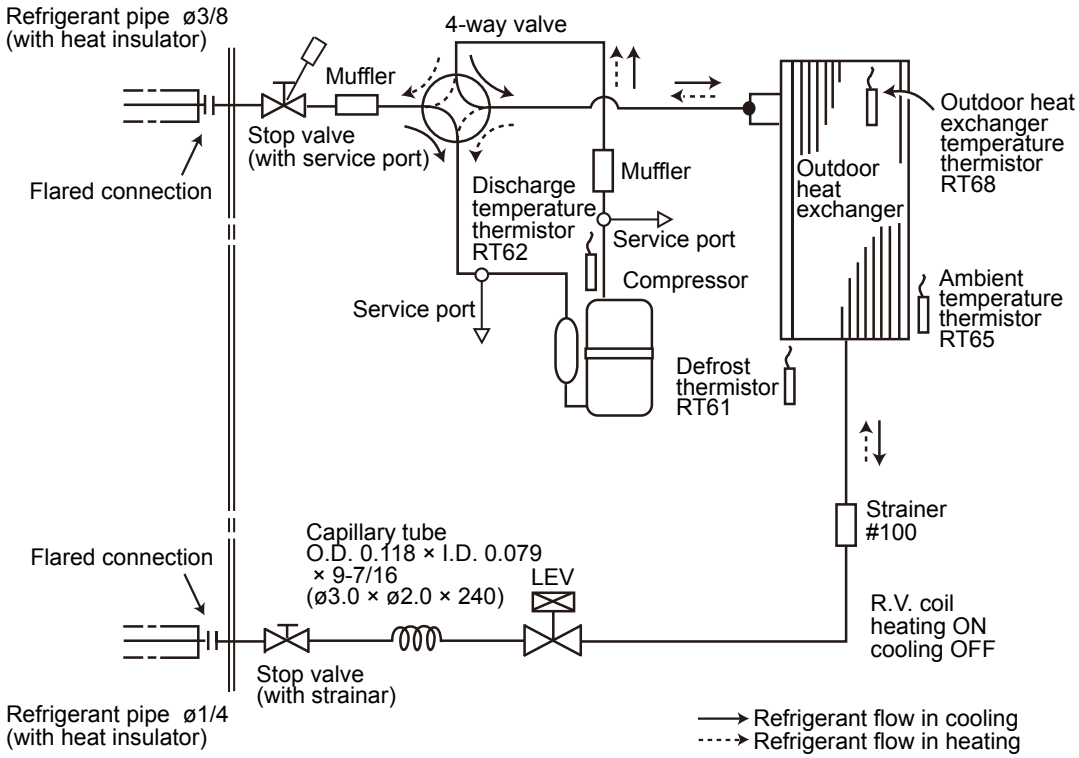

SUZ-KA12NA SUZ-KA15NA

Unit: inch (mm)

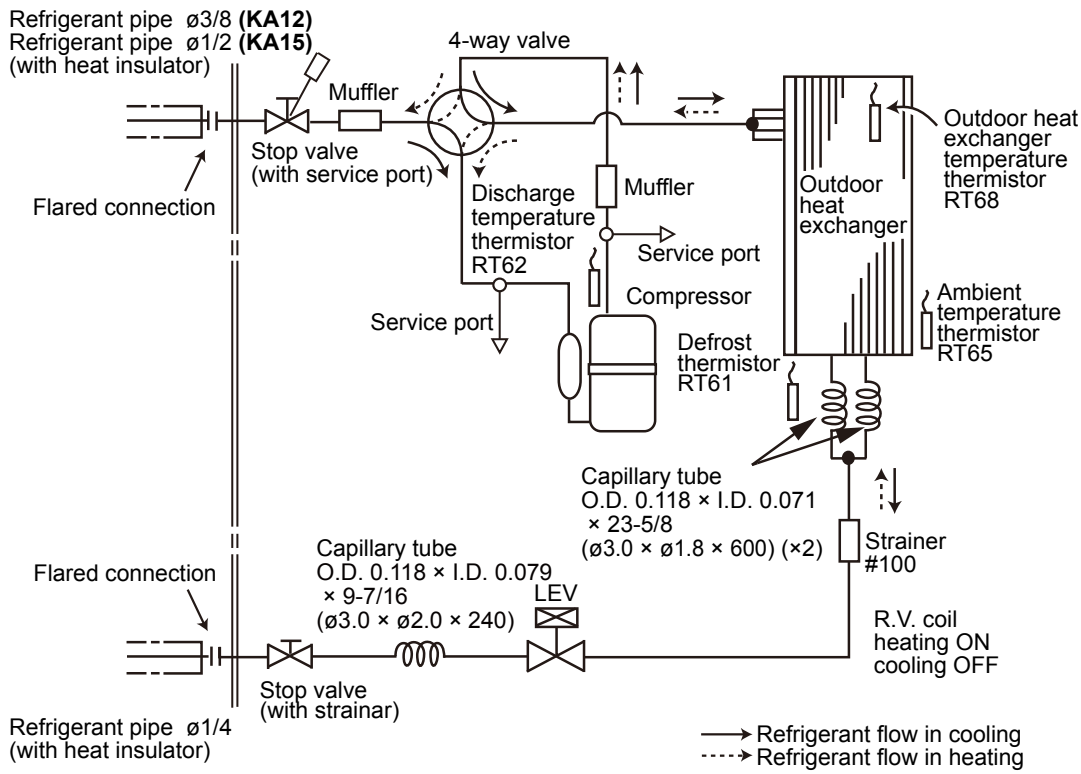

SUZ-KA18NA

Unit: inch (mm)

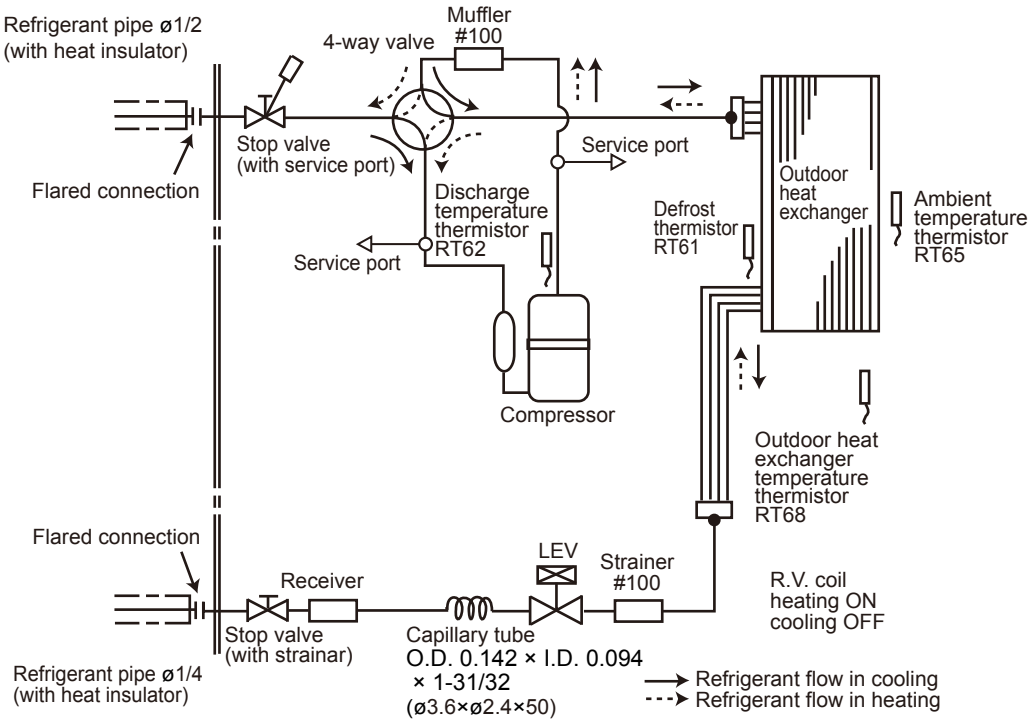

MAX. REFRIGERANT PIPING LENGTH and MAX. HEIGHT DIFFERENCE

Model	Refrigerant piping: ft.		Piping size O.D: in.	
	Max. Length A	Max. Height difference B	Gas	Liquid
SUZ-KA09/12/15NA	65	40	3/8 **(KA09/12)** 1/2 **(KA15)**	1/4
SUZ-KA18NA	100	50	1/2	

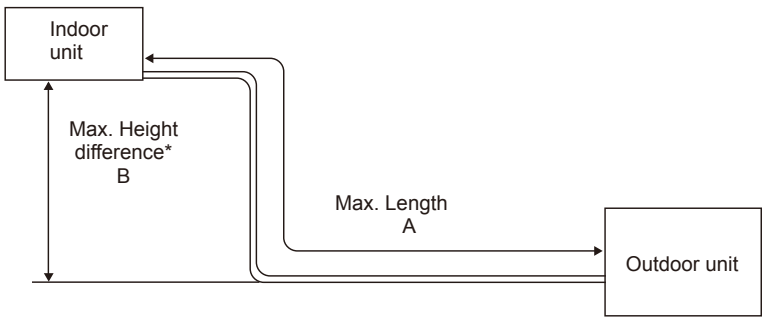

*Height difference limitations are binding regardless of the height position at which either indoor or outdoor is placed higher.

ADDITIONAL REFRIGERANT CHARGE (R410A: oz.)

Refrigerant piping exceeding 25 ft. requires additional refrigerant charge according to the calculation.

Model	Outdoor unit precharged	Refrigerant piping length (one way): ft.					
		25	30	40	50	60	65
SUZ-KA09NA	1 lb. 16 oz.	0	1.62	4.86	8.10	11.34	12.96
SUZ-KA12NA	2 lb. 9 oz.						
SUZ-KA15NA							

Calculation: X oz. = 1.62/5 oz. / ft. × (Refrigerant piping length (ft.) - 25)

Model	Outdoor unit precharged	Refrigerant piping length (one way): ft.								
		25	30	40	50	60	70	80	90	100
SUZ-KA18NA	3 lb. 16 oz.	0	1.08	3.24	5.40	7.56	9.72	11.88	14.04	16.20

Calculation: X oz. = 1.08/5 oz. / ft. × (Refrigerant piping length (ft.) - 25)

NOTE: Refrigerant piping exceeding 25 ft. requires additional refrigerant charge according to the calculation.

7 DATA

STANDARD OPERATION DATA

Representative matching				SEZ-KD09NA4		SEZ-KD12NA4		SEZ-KD15NA4		SEZ-KD18NA4	
Item			Unit	Cooling	Heating	Cooling	Heating	Cooling	Heating	Cooling	Heating
Total	Capacity		BTU/h	8100	10900	11500	13600	14100	18000	17200	21600
	SHF		-	0.80	—	0.76	—	0.80	—	0.79	—
	Input		kW	0.670	1.020	0.920	1.140	1.170	1.500	1.380	1.700
Electrical circuit	Indoor unit			**SEZ-KD09NA4**		**SEZ-KD12NA4**		**SEZ-KD15NA4**		**SEZ-KD18NA4**	
	Power supply (V, Phase, Hz)			230, 1, 60							
	Input		kW	0.06	0.04	0.07	0.05	0.09	0.07	0.09	0.07
	Current		A	0.51	0.39	0.57	0.46	0.74	0.63	0.74	0.63
	Outdoor unit			**SUZ-KA09NA**		**SUZ-KA12NA**		**SUZ-KA15NA**		**SUZ-KA18NA**	
	Power supply (V, phase, Hz)			230, 1, 60							
	Input		kW	0.61	0.98	0.85	1.09	1.08	1.43	1.39	1.63
	Current		A	2.80	4.33	3.64	4.65	4.45	5.96	5.38	6.91
Refrigerant circuit	Condensing pressure		PSIG	398	448	387	386	399	389	373	397
	Suction pressure		PSIG	135	97	135	104	133	96	142	100
	Discharge temperature		°F	148	170	162	165	159	182	150	172
	Condensing temperature		°F	116	125	114	114	116	115	112	116
	Suction temperature		°F	49	33	55	35	46	41	52	33
	Ref. pipe length		ft.	25							
	Refrigerant charge (R410A)		-	1 lb. 16 oz.		2 lb. 9 oz.				3 lb. 16 oz.	
Indoor unit	Intake air temperature	DB	°F	80	70	80	70	80	70	80	70
		WB	°F	67	60	67	60	67	60	67	60
	Discharge air temperature	DB	°F	61	102	58	103	60	102	60	101
Outdoor unit	Intake air temperature	DB	°F	95	47	95	47	95	47	95	47
		WB	°F	—	43	—	43	—	43	—	43

Representative matching				SLZ-KA09NA		SLZ-KA12NA		SLZ-KA15NA	
Item			Unit	Cooling	Heating	Cooling	Heating	Cooling	Heating
Total	Capacity		BTU/h	8400	10900	11100	13600	15000	18000
	SHF		-	0.84	—	0.77	—	0.67	—
	Input		kW	0.700	0.930	0.920	1.180	1.460	1.950
Electrical circuit	Indoor unit			**SLZ-KA09NA**		**SLZ-KA12NA**		**SLZ-KA15NA**	
	Power supply (V, Phase, Hz)			230, 1, 60					
	Input		kW	0.08	0.08	0.09	0.09	0.09	0.09
	Current		A	0.35	0.35	0.40	0.40	0.65	0.65
	Outdoor unit			**SUZ-KA09NA**		**SUZ-KA12NA**		**SUZ-KA15NA**	
	Power supply (V, phase, Hz)			230, 1, 60					
	Input		kW	0.63	0.86	0.84	1.10	1.38	1.87
	Current		A	3.12	4.02	3.82	4.93	5.98	8.10
Refrigerant circuit	Condensing pressure		PSIG	401	406	379	418	422	475
	Suction pressure		PSIG	147	104	139	106	128	98
	Discharge temperature		°F	154	169	152	173	174	188
	Condensing temperature		°F	116	117	111	118	118	128
	Suction temperature		°F	52	34	51	36	51	31
	Ref. pipe length		ft.	25					
	Refrigerant charge (R410A)		-	1 lb. 16 oz.		2 lb. 9 oz.			
Indoor unit	Intake air temperature	DB	°F	80	70	80	70	80	70
		WB	°F	67	60	67	60	67	60
	Discharge air temperature	DB	°F	62	97	60	101	57	111
Outdoor unit	Intake air temperature	DB	°F	95	47	95	47	95	47
		WB	°F	—	43	—	43	—	43

8 ACTUATOR CONTROL

SUZ-KA09NA SUZ-KA12NA SUZ-KA15NA SUZ-KA18NA

8-1. OUTDOOR FAN MOTOR CONTROL

The fan motor turns ON/OFF, interlocking with the compressor.
[ON] The fan motor turns ON 5 seconds before the compressor starts up.
[OFF] The fan motor turns OFF 15 seconds after the compressor has stopped running.

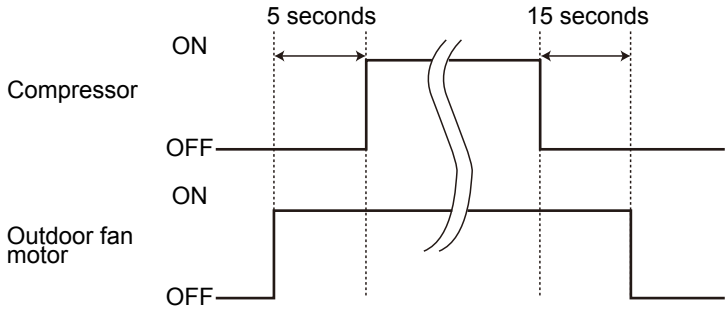

8-2. R.V. COIL CONTROL

Heating · · · · · · · · · · · · · · · · · ON
Cooling · · · · · · · · · · · · · · · · · OFF
Dry · · · · · · · · · · · · · · · · · · · OFF
NOTE: The 4-way valve reverses for 5 seconds right before start-up of the compressor.

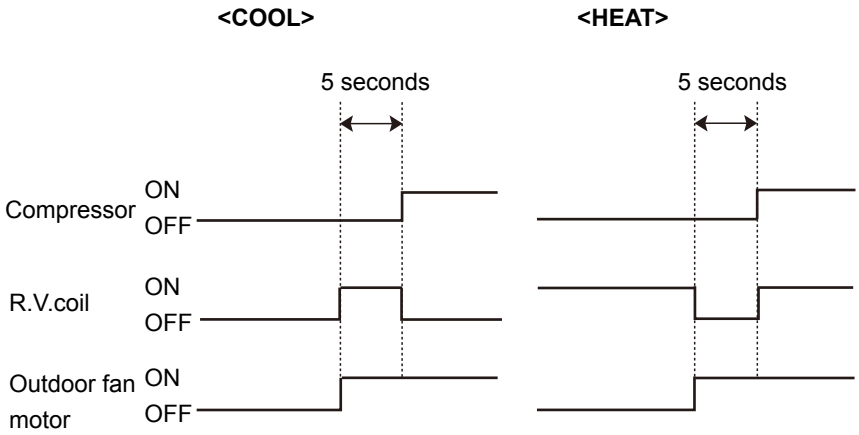

8-3. RELATION BETWEEN MAIN SENSOR AND ACTUATOR

Sensor	Purpose	Actuator				
		Compressor	LEV	Outdoor fan motor	R.V.coil	Indoor fan motor
Discharge temperature thermistor	Protection	○	○			
Indoor coil temperature thermistor	Cooling: Coil frost prevention	○				
	Heating: High pressure protection	○	○			
Defrost thermistor	Heating: Defrosting	○	○	○	○	○
Fin temperature thermistor	Protection	○		○		
Ambient temperature thermistor	Cooling: Low ambient temperature operation	○	○	○		
Outdoor heat exchanger temperature thermistor	Cooling: Low ambient temperature operation	○	○	○		
	Cooling: High pressure protection	○	○	○		

9 SERVICE FUNCTIONS

SUZ-KA09NA SUZ-KA12NA SUZ-KA15NA SUZ-KA18NA

9-1. CHANGE IN DEFROST SETTING

Changing defrost finish temperature

<JS> To change the defrost finish temperature, cut/solder the JS wire of the outdoor inverter P.C. board. (Refer to "10-6. TEST POINT DIAGRAM AND VOLTAGE".)

Jumper		Defrost finish temperature	
		SUZ-KA09/12/15	SUZ-KA18
JS	Soldered (Initial setting)	41°F (5°C)	48°F (9°C)
	None (Cut)	50°F (10°C)	64°F (18°C)

9-2. PRE-HEAT CONTROL SETTING

PRE-HEAT CONTROL

When moisture gets into the refrigerant cycle, it may interfere the start-up of the compressor at low outside temperature. The pre-heat control prevents this interference. The pre-heat control turns ON when outside temperature is 68°F (20°C) or below. When pre-heat control is turned ON, compressor is energized. (About 50 W)

<JK> To activate the pre-heat control, cut the JK wire of the inverter P.C. board. (Refer to "10-6. TEST POINT DIAGRAM AND VOLTAGE".)

NOTE: When the inverter P.C. board is replaced, check the Jumper wires, and cut/solder them if necessary.

10 TROUBLESHOOTING

SUZ-KA09NA SUZ-KA12NA SUZ-KA15NA SUZ-KA18NA

10-1. CAUTIONS ON TROUBLESHOOTING

1. Before troubleshooting, check the following

1) Check the power supply voltage.
2) Check the indoor/outdoor connecting wire for miswiring.

2. Take care of the following during servicing

1) Before servicing the air conditioner, be sure to turn OFF the main unit first with the remote controller, and turn off the breaker.
2) Be sure to turn OFF the power supply before removing the front panel, the cabinet, the top panel, and the electronic control P.C. board.
3) When removing the electrical parts, be careful of the residual voltage of smoothing capacitor.
4) When removing the electronic control P.C. board, hold the edge of the board with care NOT to apply stress on the components.
5) When connecting or disconnecting the connectors, hold the housing of the connector. DO NOT pull the lead wires.

3. Troubleshooting procedure

1) First, check if the OPERATION INDICATOR lamp is blinking ON and OFF to indicate an abnormality.
2) Before servicing check that the connector and terminal are connected properly.
3) When the electronic control P.C. board seems to be defective, check the copper foil pattern for disconnection and the components for bursting and discoloration.
4) Refer to "10-2. TROUBLESHOOTING CHECK TABLE" and "10-3. HOW TO PROCEED "SELF-DIAGNOSIS"".

10-2. TROUBLE SHOOTING CHECK TABLE
SUZ-KA09NA SUZ-KA12NA SUZ-KA15NA SUZ-KA18NA

No.	Symptoms	LED indication	check code	Abnormal point/ Condition	Condition	Remedy
1	Outdoor unit does not operate.	1-time flash every 2.5 seconds	UP	Outdoor power system	Overcurrent protection cut-out operates 3 consecutive times within 1 minute after the compressor gets started.	•Reconnect connector of compressor. •Refer to "10-5.Ⓐ How to check inverter/compressor". •Check stop valve.
2			U3	Outdoor thermistors	Discharge temperature thermistor shorts, or opens during compressor running.	•Refer to "10-5.Ⓖ Check of outdoor thermistors".
			U4		Fin temperature thermistor, defrost thermistor, P.C. board temperature thermistor, outdoor heat exchanger temperature thermistor or ambient temperature thermistor shorts, or opens during compressor running.	
3		6-time flash 2.5 seconds OFF	FC	Outdoor control system	Nonvolatile memory data cannot be read properly.	•Replace inverter P.C. board.
4			E8 / E9	Serial signal	The communication fails between the indoor and outdoor unit for 3 minutes.	•Check indoor/outdoor connecting wire. •Replace indoor or outdoor P.C. board if abnormality is displayed again.
5		11-time flash 2.5 seconds OFF	UE	Stop valve/ Closed valve	Closed valve is detected by compressor current.	• Check stop valve.
6	'Outdoor unit stops and restarts 3 minutes later' is repeated.	2-time flash 2.5 seconds OFF		Overcurrent protection	Large current flows into intelligent power module.	•Reconnect connector of compressor. •Refer to "10-5.Ⓐ How to check inverter/compressor". •Check stop valve.
7		3-time flash 2.5 seconds OFF		Discharge temperature overheat protection	Temperature of discharge temperature thermistor exceeds 116°C, compressor stops. Compressor can restart if discharge temperature thermistor reads 100°C or less 3 minutes later.	•Check refrigerant circuit and refrigerant amount. •Refer to "10-5. Ⓚ Check of LEV".
8		4-time flash 2.5 seconds OFF		Fin temperature /P.C. board temperature thermistor overheat protection	Temperature of fin temperature thermistor on the heat sink exceeds 72 to 86°C or temperature of P.C. board temperature thermistor on the inverter P.C.board exceeds 72 to 85°C.	•Check around outdoor unit. •Check outdoor unit air passage. • Refer to "10-5. Ⓘ Check of outdoor fan motor".
9		5-time flash 2.5 seconds OFF		High pressure protection	Indoor coil thermistor exceeds 70°C in HEAT mode. Defrost thermistor exceeds 70°C in COOL mode.	•Check refrigerant circuit and refrigerant amount. •Check stop valve.
10		8-time flash 2.5 seconds OFF		Compressor synchronous abnormality	The waveform of compressor current is distorted.	•Reconnect connector of compressor. •Refer to "10-5.Ⓐ How to check inverter/compressor".
11		10-time flash 2.5 seconds OFF		Outdoor fan motor	Outdoor fan has stopped 3 times in a row within 30 seconds after outdoor fan start-up.	•Refer to "10-5.Ⓘ Check of outdoor fan motor. •Refer to "10-5.Ⓛ Check of inverter P.C. board.
12		12-time flash 2.5 seconds OFF		Each phase current of compressor	Each phase current of compressor cannot be detected normally.	• Refer to "10-5 Ⓐ How to check inverter/compressor".
13		13-time flash 2.5 seconds OFF		DC voltage	DC voltage of inverter cannot be detected normally.	• Refer to "10-5 Ⓐ How to check inverter/compressor".
14	Outdoor unit operates.	1-time flash 2.5 seconds OFF		Frequency drop by current protection	When the input current exceeds approximately 7A(KA25)/ 8A(KA35)/12A(KA50)14A(KA60)/16A(KA71), compressor frequency lowers.	The unit is normal, but check the following. •Check if indoor filters are clogged. •Check if refrigerant is short. •Check if indoor/outdoor unit air circulation is short cycled.
15		3-time flash 2.5 seconds OFF		Frequency drop by high pressure protection	Temperature of indoor coil thermistor exceeds 131 °F [55 °C] in HEAT mode, compressor frequency lowers.	
				Frequency drop by defrosting in COOL mode	Indoor coil thermistor reads 46 °F [8 °C] or less in COOL mode, compressor frequency lowers.	
16		4-time flash 2.5 seconds OFF		Frequency drop by discharge temperature protection	Temperature of discharge temperature thermistor exceeds 232 °F [111 °C], compressor frequency lowers.	•Check refrigerant circuit and refrigerant amount. •Refer to "10-5.Ⓚ Check of LEV". •Refer to "10-5.Ⓖ Check of outdoor thermistors".
17		7-time flash 2.5 seconds OFF		Low discharge temperature protection	Temperature of discharge temperature thermistor has been 122 °F [50 °C] or less for 20 minutes.	•Refer to "10-5.Ⓚ Check of LEV". •Check refrigerant circuit and refrigerant amount.
18		8-time flash 2.5 seconds OFF		PAM protection PAM: Pulse Amplitude Modulation	The overcurrent flows into IGBT (Insulated Gate Bipolar transistor: TR821) or the bus-bar voltage reaches 320 V or more, PAM stops and restarts.	This is not malfunction. PAM protection will be activated in the following cases: 1. Instantaneous power voltage drop. (Short time power failure) 2. When the power supply voltage is high.
				Zero cross detecting circuit	Zero cross signal for PAM control cannot be detected.	
19		9-time flash 2.5 seconds OFF		Inverter check mode	The connector of compressor is disconnected, inverter check mode starts.	• Check if the connector of the compressor is correctly connected. • Refer to "10-5.Ⓐ How to check inverter/compressor".

NOTE: 1. The location of LED is illustrated at the right figure. Refer to "10-6. TEST POINT DIAGRAM".
2. LED is lighted during normal operation.

Inverter P.C. board

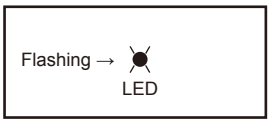

The flashing frequency shows the number of times the LED blinks after every 2.5-second OFF.
(Example) When the flashing frequency is "2".

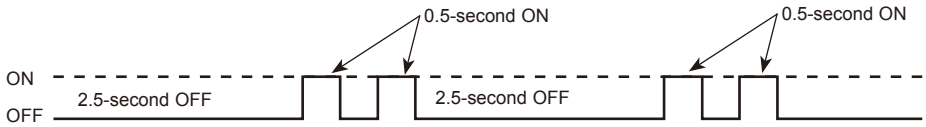

10-3. HOW TO PROCEED "SELF-DIAGNOSIS"

As this air conditioner has a function to memorize all the failures that had occurred, the latest failure detail can be recalled by following the procedure below. Use this function when the check code is not displayed with wired remote controller or the remote controller at use is wireless type.

10-3-1. Self-diagnosis <PAR-21MAA>

When a problem occurs to the air conditioner, the indoor and outdoor units will stop, and the problem is shown in the remote controller display.
[CHECK] and the refrigerant address are displayed on the temperature display, and the check code and unit number are displayed alternately as shown below.

① (If the outdoor unit is malfunctioning, the unit number will be "00".)
② In the case of group control, for which one remote controller controls multiple refrigerant systems, the refrigerant address and check code of the unit that first experienced trouble (i.e., the unit that transmitted the check code) will be displayed.
③ To clear the check code, press the (ON/OFF) button.

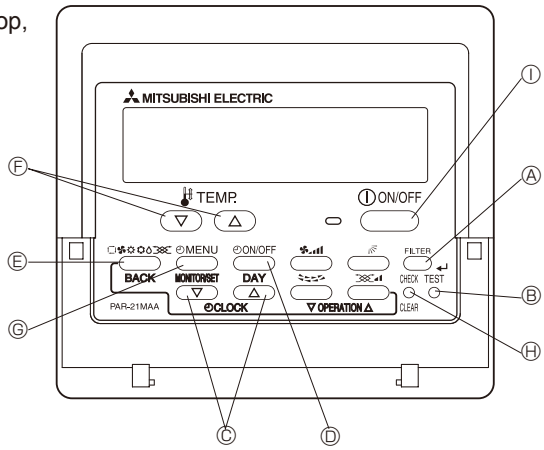

(Alternating Display)

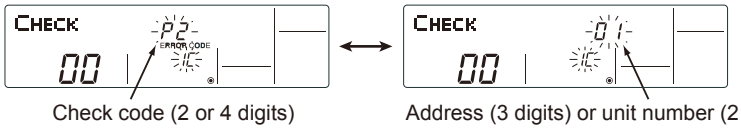

Check code (2 or 4 digits) Address (3 digits) or unit number (2 digits)

[When using remote-/local-controller combined operation, cancel the check code after turning off remote operation.
During central control by a MELANS controller, cancel the check code by pressing the (ON/OFF) button.]

10-3-2. Self-Diagnosis During Maintenance or Service <PAR-21MAA>

Since each unit has a function that stores check codes, the latest check code can be recalled even if it is cancelled by the remote controller or power is turned off.

Check the error history for each unit using the remote controller.

① Switch to self-diagnosis mode.
Press the (CHECK) button (Ⓗ in the picture above) twice within 3 seconds.
The display content will change as shown below.

② Set the unit number or refrigerant address you want to diagnose.
Press the [TEMP] buttons ((▽) and (△)) (Ⓕ in the picture above) to select the desired number or address. The number (address) changes between [01] and [50] or [00] and [15].

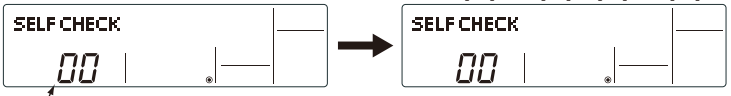

Unit number or refrigerant address to be diagnosed

The refrigerant address will begin to blink approximately 3 seconds after being selected and the self-diagnosis process will begin.

③ Display self-diagnosis results.
<When there is error history>
(For the definition of each check code, refer to the indoor unit's installation manual or service handbook.)

(Alternating Display)

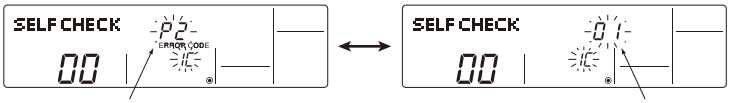

Check code (2 or 4 digits) Address (3 digits) or unit number (2 digits)

<When there is no error history> <When there is no corresponding unit>

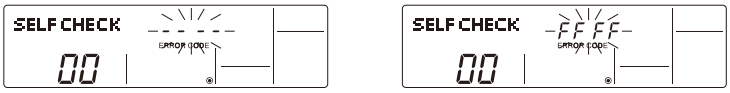

④ Reset the error history.
Display the error history in the diagnosis result display screen (see step ③).

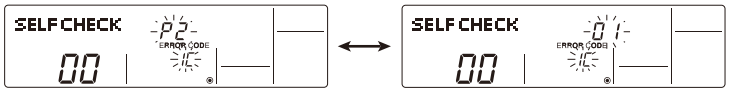

Press the (ON/OFF) button (Ⓓ in the picture in the previous page) twice within 3 seconds. The self-diagnosis address or refrigerant address will blink.

When the error history is reset, the display will look like the one shown below. However, if you fail to reset the error history, the error content will be displayed again.

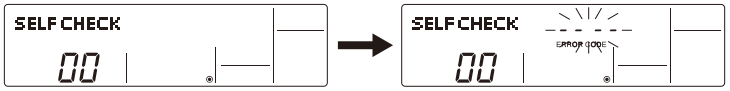

⑤ Cancel self-diagnosis.
Self-diagnosis can be cancelled by the following 2 methods.

Press the (CHECK) button (Ⓗ in the picture in the previous page) twice within 3 seconds. → Self-diagnosis will be cancelled and the screen will return to the previous state in effect before the start of self-diagnosis.

Press the (ON/OFF) button (Ⓓ in the picture in the previous page). → Self-diagnosis will be cancelled and the indoor unit will stop.

10-3-3. Remote Controller Check <PAR-21MAA>

If the air conditioner cannot be operated from the remote controller, diagnose the remote controller as explained below.

① First, check that the power-on indicator is lit.
If the correct voltage (DC12 V) is not supplied to the remote controller, the indicator will not light.
If this occurs, check the remote controller's wiring and the indoor unit.

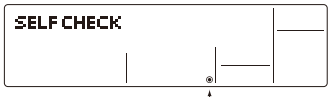

Power on indicator

② Switch to the remote controller self-diagnosis mode.

Press the (CHECK) button (Ⓗ in the picture in the previous page) for 5 seconds or more. The display content will change as shown below.

Press the (FILTER) button (Ⓐ in the picture in the previous page) to start self-diagnosis.

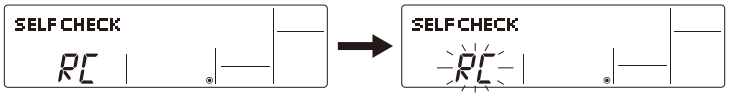

③ Remote controller self-diagnosis result

[When the remote controller is functioning correctly]

Check for other possible causes, as there is no problem with the remote controller.

[When the remote controller malfunctions]
(Error display 1) "NG" blinks. → The remote controller's transmitting-receiving circuit is defective.

The remote controller must be replaced with a new one.

[Where the remote controller is not defective, but cannot be operated.]
(Error display 2) [E3], [6833] or [6832] blinks. → Transmission is not possible.

There might be noise or interference on the transmission path, or the indoor unit or other remote controllers are defective. Check the transmission path and other controllers.

(Error display 3) "ERC" and the number of data errors are displayed.
→ Data error has occurred.

The number of data errors is the difference between the number of bits sent from the remote controller and the number actually transmitted through the transmission path. If such a problem is occurring, the transmitted data is affected by noise, etc. Check the transmission path.

☞ When the number of data errors is "02":
Transmission data from remote controller
Transmission data on transmission path

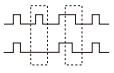

④ To cancel remote controller diagnosis

Press the (CHECK) button (Ⓗ in the picture in the previous page) for 5 seconds or more. Remote controller diagnosis will be cancelled, "PLEASE WAIT" and operation lamp will blink. After approximately 30 seconds, the state in effect before the diagnosis will be restored.

10-3-4. Self-diagnosis <Wireless remote controller>

<In case of trouble during operation>

When a malfunction occurs to air conditioner, both indoor unit and outdoor unit will stop and operation lamp blinks to inform unusual stop.

<Malfunction-diagnosis method at maintenance service>

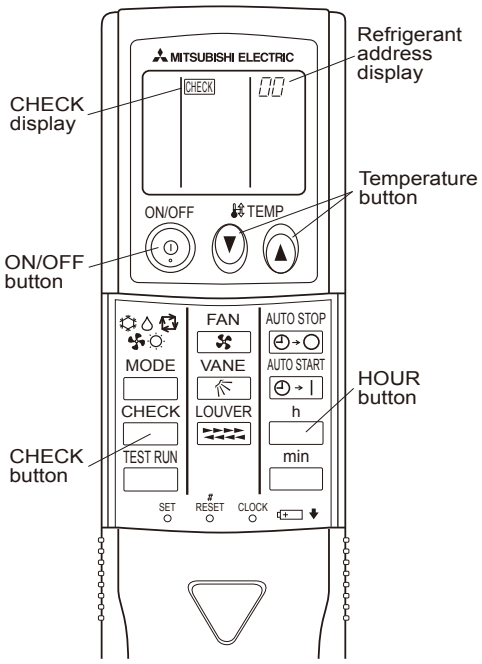

[Procedure]

1. Press the CHECK button twice.	• "CHECK" lights, and refrigerant address "00" flashes. • Check that the remote controller's display has stopped before continuing.
2. Press the temperature buttons.	• Select the refrigerant address of the indoor unit for the self-diagnosis. Note: Set refrigerant address using the outdoor unit's DIP switch (SW1). (For more information, see the outdoor unit installation manual.)
3. Point the remote controller at the sensor on the indoor unit and press the HOUR button.	• If an air conditioner error occurs, the indoor unit's sensor emits an intermittent buzzer sound, the operation light flashes, and the check code is output. (It takes 3 seconds at most for check code to appear.)
4. Point the remote controller at the sensor on the indoor unit and press the ON/OFF button.	• The check mode is cancelled.

• Refer to the following tables for details on the check codes.

[Output pattern A]

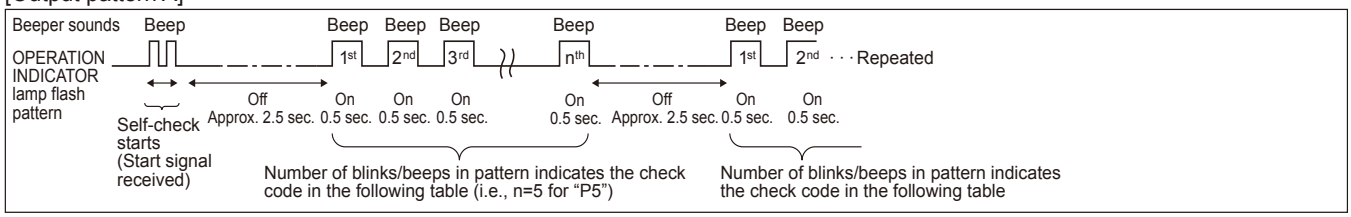

[Output pattern B]

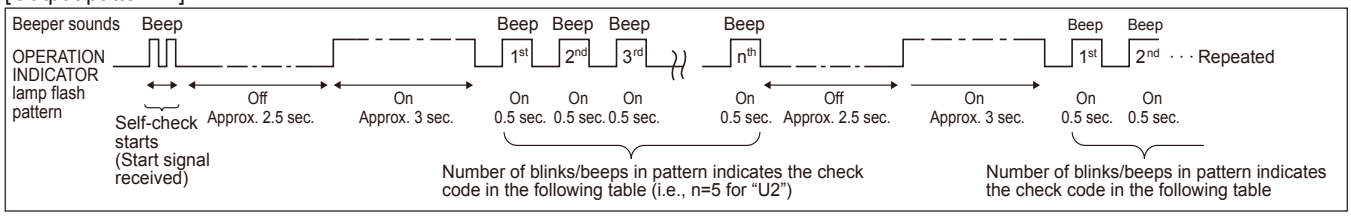

[Output pattern A] Errors detected by indoor unit

Wireless remote controller Beeper sounds/OPERATION INDICATOR lamp flashes (Number of times)	Wired remote controller Check code	Symptom	Remark
1	P1	Intake sensor error	As for indoor unit, refer to indoor unit's service manual.
2	P2	Pipe (TH2) sensor error	
	P9	Pipe (TH5) sensor error	
3	E6,E7	Indoor/outdoor unit communication error	
4	P4	Drain sensor error/Float switch connector (CN4F) open	
5	P5	Drain pump error	
	PA	Forced compressor stop (due to water leakage abnormality)	
6	P6	Freezing/Overheating protection operation	
7	EE	Communication error between indoor and outdoor units	
9	E4, E5	Remote controller signal receiving error	
12	Fb	Indoor unit control system error (memory error, etc.)	
–	E0, E3	Remote controller transmission error	
–	E1, E2	Remote controller control board error	

[Output pattern B] Errors detected by unit other than indoor unit (outdoor unit, etc.)

Wireless remote controller Beeper sounds/OPERATION INDICATOR lamp flashes (Number of times)	Wired remote controller Check code	Symptom
1	E9	Indoor/outdoor unit communication error (Transmitting error) (Outdoor unit)
2	UP	Compressor overcurrent interruption
3	U3,U4	Open/short of outdoor unit thermistors
14	Others	Other errors (Refer to the technical manual for the outdoor unit.)

Notes: 1. If the beeper does not sound again after the initial 2 beeps to confirm the self-check start signal was received and the OPERATION INDICATOR lamp does not come on, there are no error records.
2. If the beeper sounds 3 times continuously "beep, beep, beep (0.4 + 0.4 + 0.4 sec.)" after the initial 2 beeps to confirm the self-check start signal was received, the specified refrigerant address is incorrect.

10-4. TROUBLE CRITERION OF MAIN PARTS

SUZ-KA09NA SUZ-KA12NA SUZ-KA15NA SUZ-KA18NA

<table>
<tr><th>Part name</th><th>Check method and criterion</th><th>Figure</th></tr>
<tr><td>Defrost thermistor (RT61)

Fin temperature thermistor (RT64)

Ambient temperature thermistor (RT65)

Outdoor heat exchanger temperature thermistor (RT68)</td><td>Measure the resistance with a tester.

Refer to “Inverter P.C. board” in "10-6. TEST POINT DIAGRAM AND VOLTAGE”, for the chart of thermistor.</td><td></td></tr>
<tr><td>Discharge temperature thermistor (RT62)</td><td>Measure the resistance with a tester. Before measurement, hold the thermistor with your hands to warm it up.

Refer to “Inverter P.C. board” in "10-6. TEST POINT DIAGRAM AND VOLTAGE”, for the chart of thermistor.</td><td></td></tr>
<tr><td>Compressor</td><td>Measure the resistance between terminals with a tester.
(Temperature: 14 to 104°F (-10 to 40°C))
<table>
<tr><th></th><th colspan="3">Normal (Ω)</th></tr>
<tr><th></th><th>KA09</th><th>KA12</th><th>KA15/18</th></tr>
<tr><td>U-V
U-W
V-W</td><td>1.36 to 1.93</td><td>1.52 to 2.17</td><td>0.78 to 1.11</td></tr>
</table></td><td> 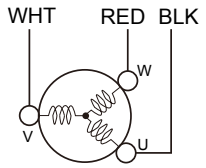
</td></tr>
<tr><td>Outdoor fan motor</td><td>Measure the resistance between lead wires with a tester.
(Temperature: 14 to 104°F (-10 to 40°C))
<table>
<tr><th rowspan="2">Color of lead wire</th><th colspan="2">Normal (Ω)</th></tr>
<tr><th>KA09/12/15</th><th>KA18</th></tr>
<tr><td>RED – BLK
BLK – WHT
WHT – RED</td><td>28 to 40</td><td>11 to 16</td></tr>
</table></td><td> 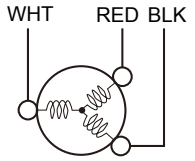
</td></tr>
<tr><td>R. V. coil (21S4)</td><td>Measure the resistance with a tester.
(Temperature: 14 to 104°F (-10 to 40°C))
<table>
<tr><th>Normal (kΩ)</th></tr>
<tr><td>0.97 to 1.38</td></tr>
</table></td><td></td></tr>
<tr><td>Expansion valve coil (LEV)</td><td>Measure the resistance with a tester.
(Temperature: 14 to 104°F (-10 to 40°C))
<table>
<tr><th>Color of lead wire</th><th>Normal (Ω)</th></tr>
<tr><td>WHT – RED</td><td rowspan="4">37 to 54</td></tr>
<tr><td>RED – ORN</td></tr>
<tr><td>YLW – BRN</td></tr>
<tr><td>BRN – BLU</td></tr>
</table></td><td> 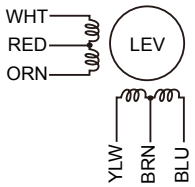
</td></tr>
</table>

10-5. TROUBLESHOOTING FLOW

Ⓐ How to check inverter/compressor

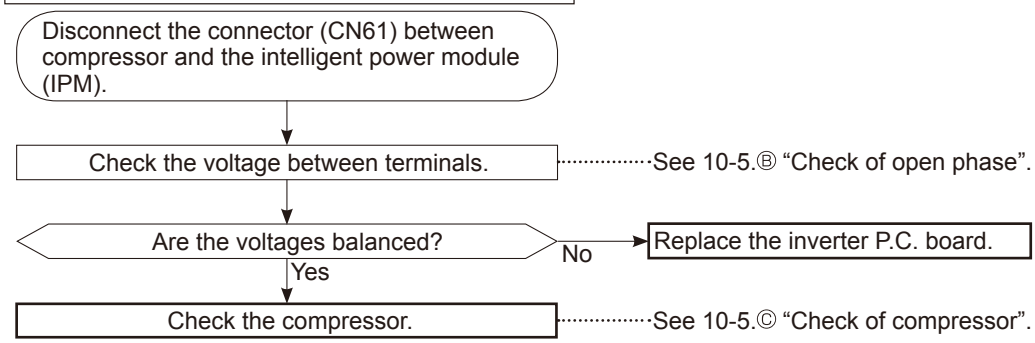

Ⓑ Check of open phase

- With the connector between the compressor and the intelligent power module disconnected, activate the inverter and check if the inverter is normal by measuring the voltage balance between the terminals.

Output voltage is 50 - 130 V. (The voltage may differ according to the tester.)

<< Operation method (Test run operation)>>
1. Press the TEST (RUN) button twice.
2. Press the MODE button and switch to the COOL (or HEAT) mode.
3. Compressor starts at rated frequency in COOL mode or 58 Hz in HEAT mode.
4. Indoor fan operates at High speed.
5. To cancel test run operation, press the ON/OFF button on remote controller.

<<Measurement point>>
at 3 points
BLK (U) - WHT (V)
BLK (U) - RED (W)
WHT(V) - RED (W)

Measure AC voltage between the lead wires at 3 points.

NOTE: 1. Output voltage varies according to power supply voltage.
2. Measure the voltage by analog type tester.
3. During this check, LED of the inverter P.C. board flashes 9 times.
(Refer to "10-6. TEST POINT DIAGRAM AND VOLTAGE".)

Ⓒ Check of compressor

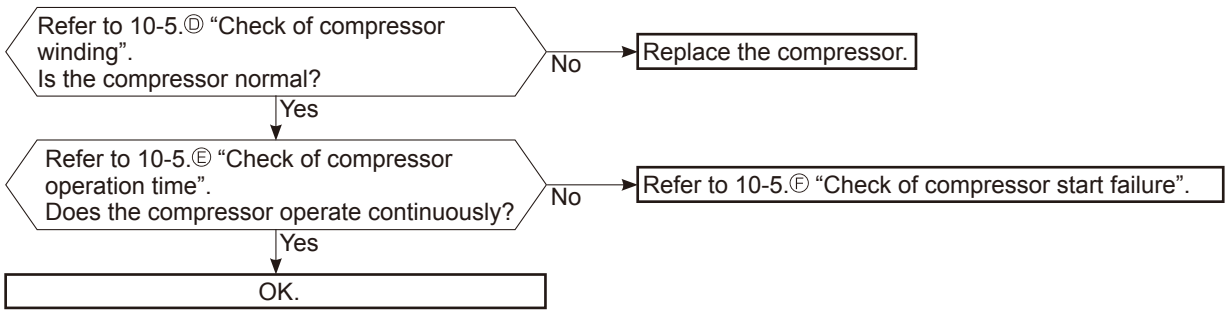

Ⓓ Check of compressor winding

● Disconnect the connector (CN61) between the compressor and intelligent power module, and measure the resistance between the compressor terminals.

<<Measurement point>>
at 3 points
BLK - WHT
BLK - RED Measure the resistance between the lead wires at 3 points.
WHT - RED

<<Judgement>>
Refer to "10-4. TROUBLE CRITERION OF MAIN PARTS".

0[Ω] ····· Abnormal [short]
Infinite [Ω]····· Abnormal [open]
NOTE: Be sure to zero the ohmmeter before measurement.

Ⓔ Check of compressor operation time

●Connect the compressor and activate the inverter. Then measure the time until the inverter stops due to over current.

<<Operation method>>
Start heating or cooling operation by pressing the TEST button twice on the remote controller. (Test run mode)
(TEST RUN OPERATION: Refer to 10-5 Ⓑ.)

<<Measurement>>
Measure the time from the start of compressor to the stop of compressor due to overcurrent.

<<Judgement>>

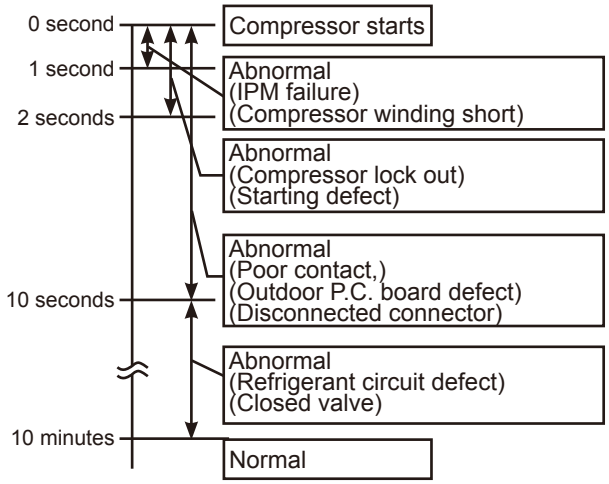

Ⓕ Check of compressor start failure

Confirm that 1~4 is normal.
• Electrical circuit check
1. Contact of the compressor connector (including CN61)
2. Output voltage of inverter P.C. board and balance of them (See 10-5.Ⓑ)
3. Direct current voltage between DB61(+) and (-) on the inverter P.C. board
4. Voltage between outdoor terminal block S1-S2

↓

Does the compressor run for 10 seconds or more after it starts?
- Yes → Check the refrigerant circuit. Check the stop valve.
- No ↓

After the compressor is heated with a drier, does the compressor start?*1
- No → Replace the compressor.
- Yes ↓

Compressor start failure. Activate pre-heat control. (Refer to "9-2. PRE-HEAT CONTROL SETTING")

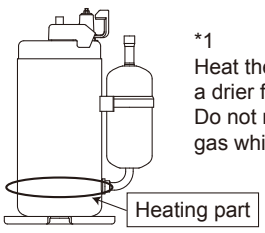

*1
Heat the compressor with a drier for about 20 minutes. Do not recover refrigerant gas while heating.

Ⓖ Check of outdoor thermistors

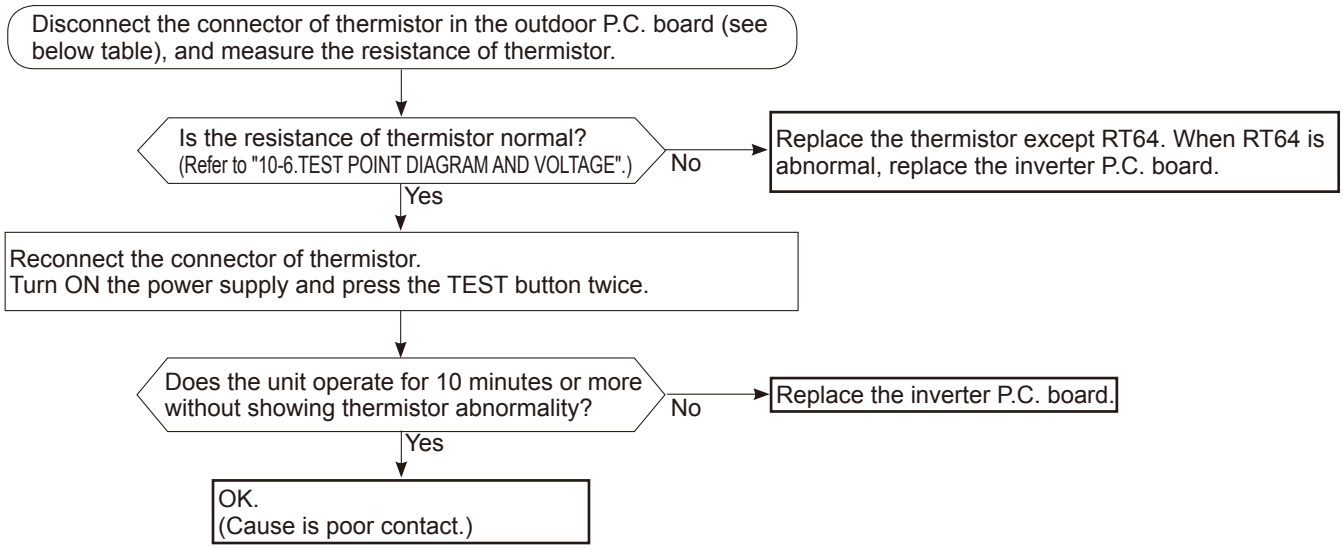

Thermistor	Symbol	Connector, Pin No.	Board
Defrost	RT61	Between CN641 pin1 and pin2	Inverter P.C. board
Discharge temperature	RT62	Between CN641 pin3 and pin4	
Fin temperature	RT64	Between CN642 pin1 and pin2	
Ambient temperature	RT65	Between CN643 pin1 and pin2	
Outdoor heat exchanger temperature	RT68	Between CN644 pin1 and pin3	

Ⓗ Check of R.V. coil

First of all, measure the resistance of R.V. coil to check if the coil is defective. Refer to "10-4. TROUBLE CRITERION OF MAIN PARTS".
In case CN721 is disconnected or R.V. coil is open, voltage is generated between the terminal pins of the connector although no signal is being transmitted to R.V. coil. Check if CN721 is connected.

Unit operates COOL mode even if it is set to HEAT mode.

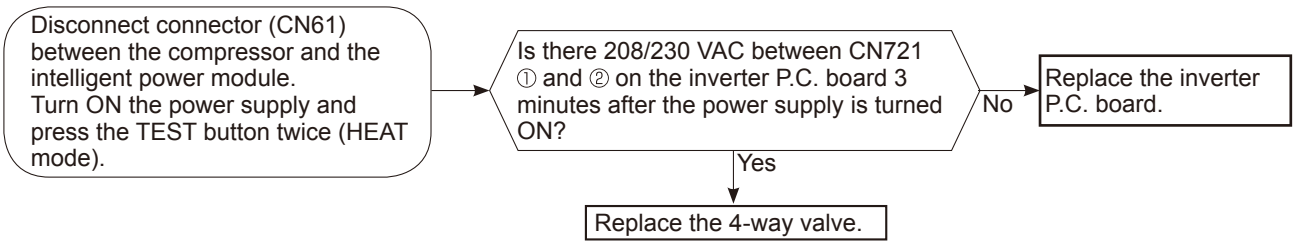

Unit operates HEAT mode even if it is set to COOL mode.

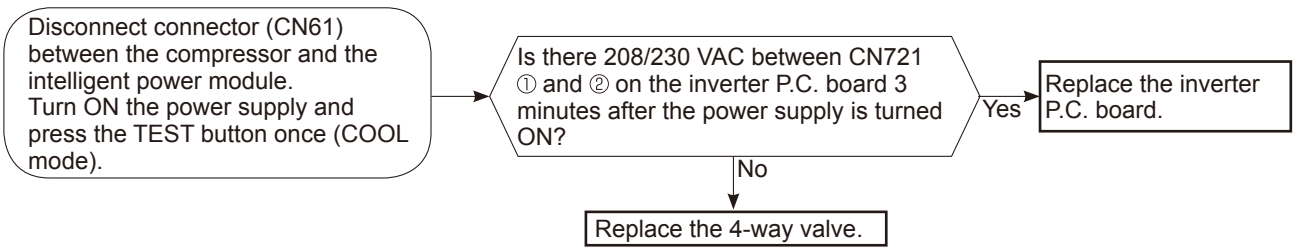

Ⓘ Check of outdoor fan motor

SUZ-KA09/12/15NA

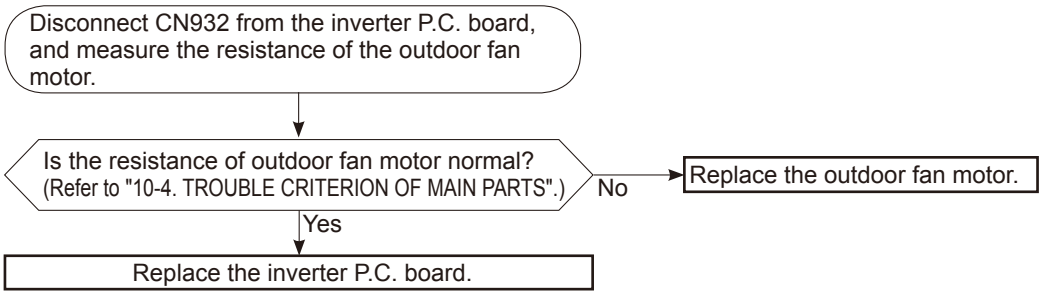

SUZ-KA18NA

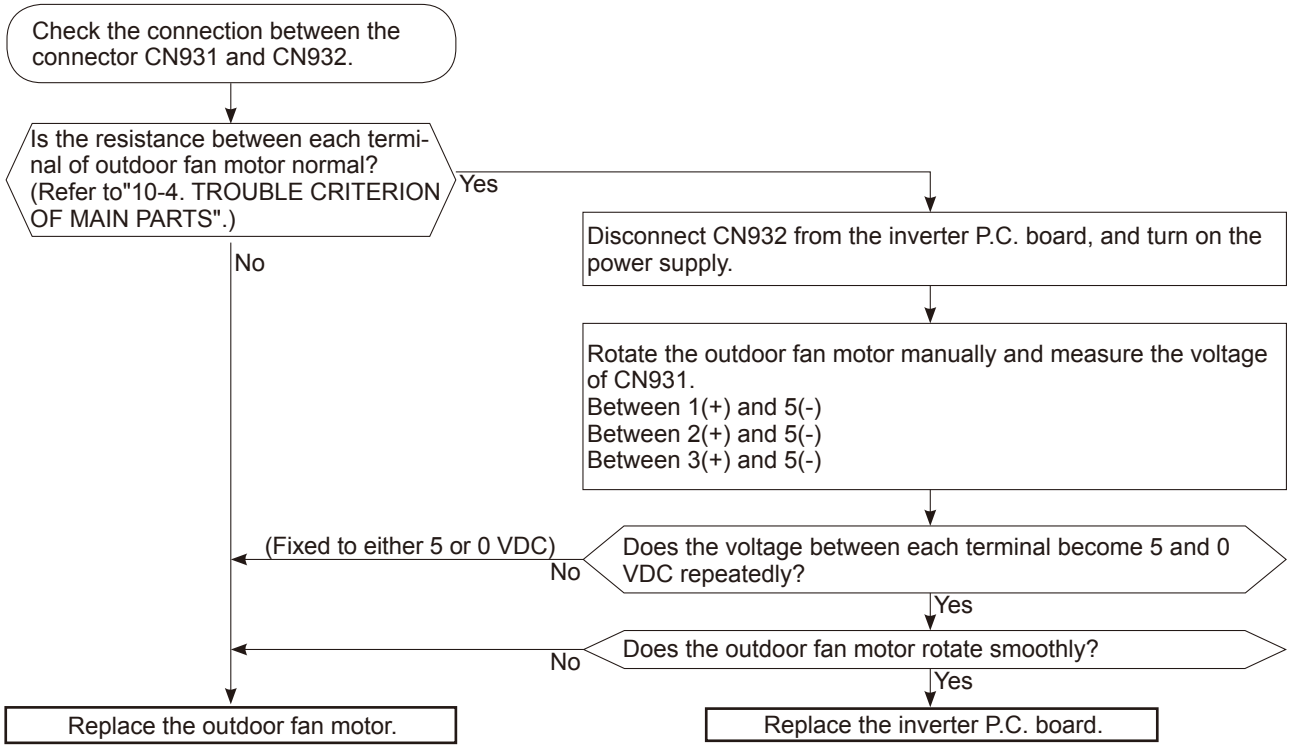

Ⓙ Check of power supply

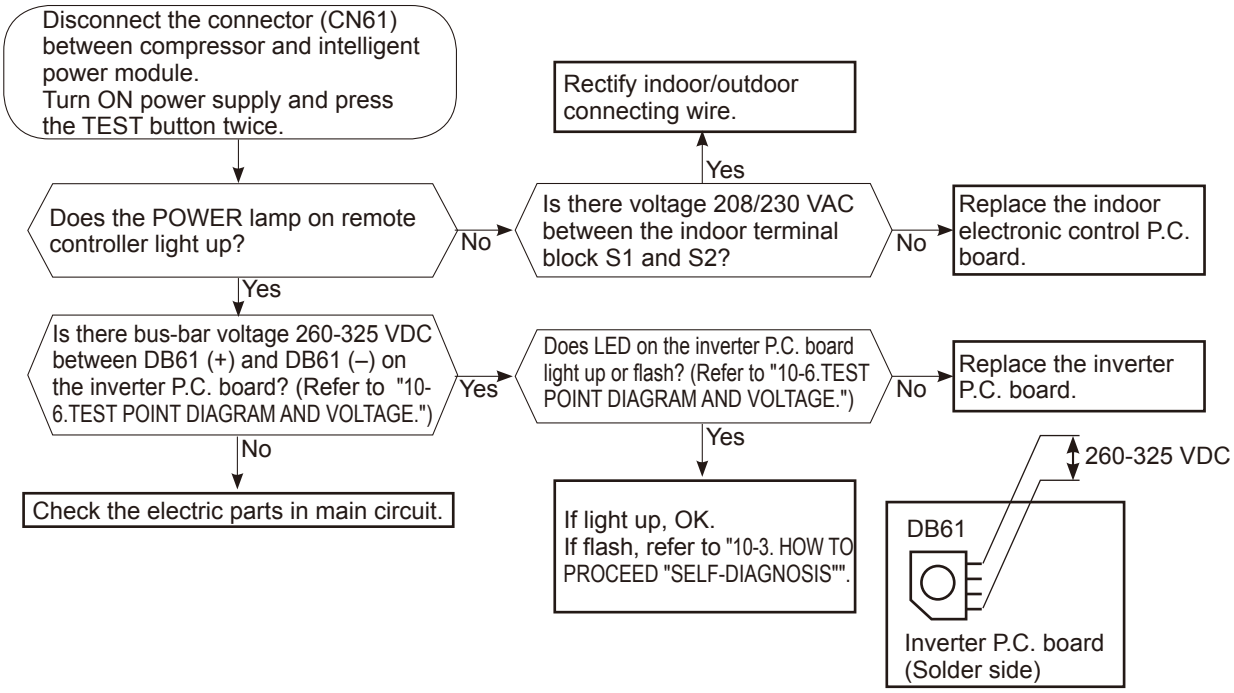

Ⓚ Check of LEV (Expansion valve)

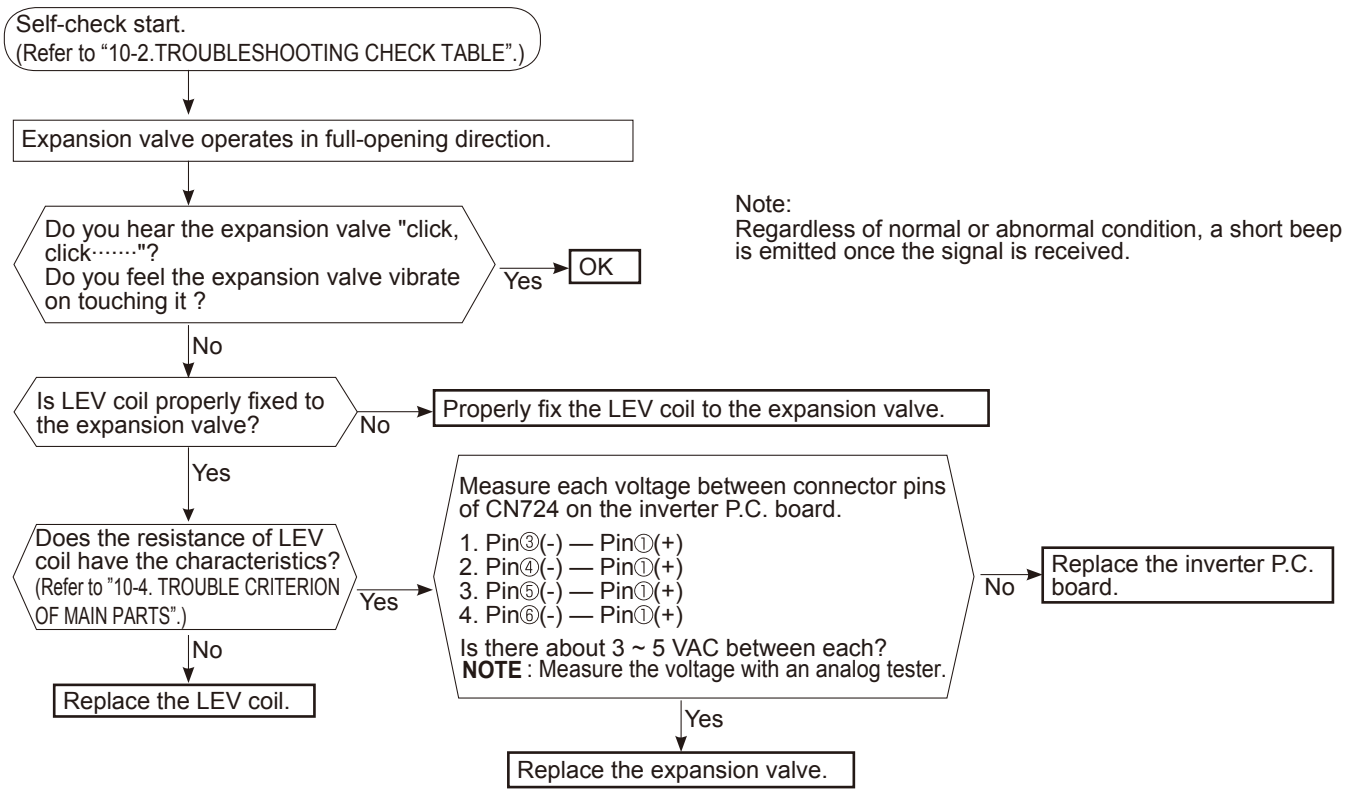

Note:
Regardless of normal or abnormal condition, a short beep is emitted once the signal is received.

Note: After check of LEV, turn OFF the power supply and turn ON it again.

Ⓛ Check of inverter P.C. board

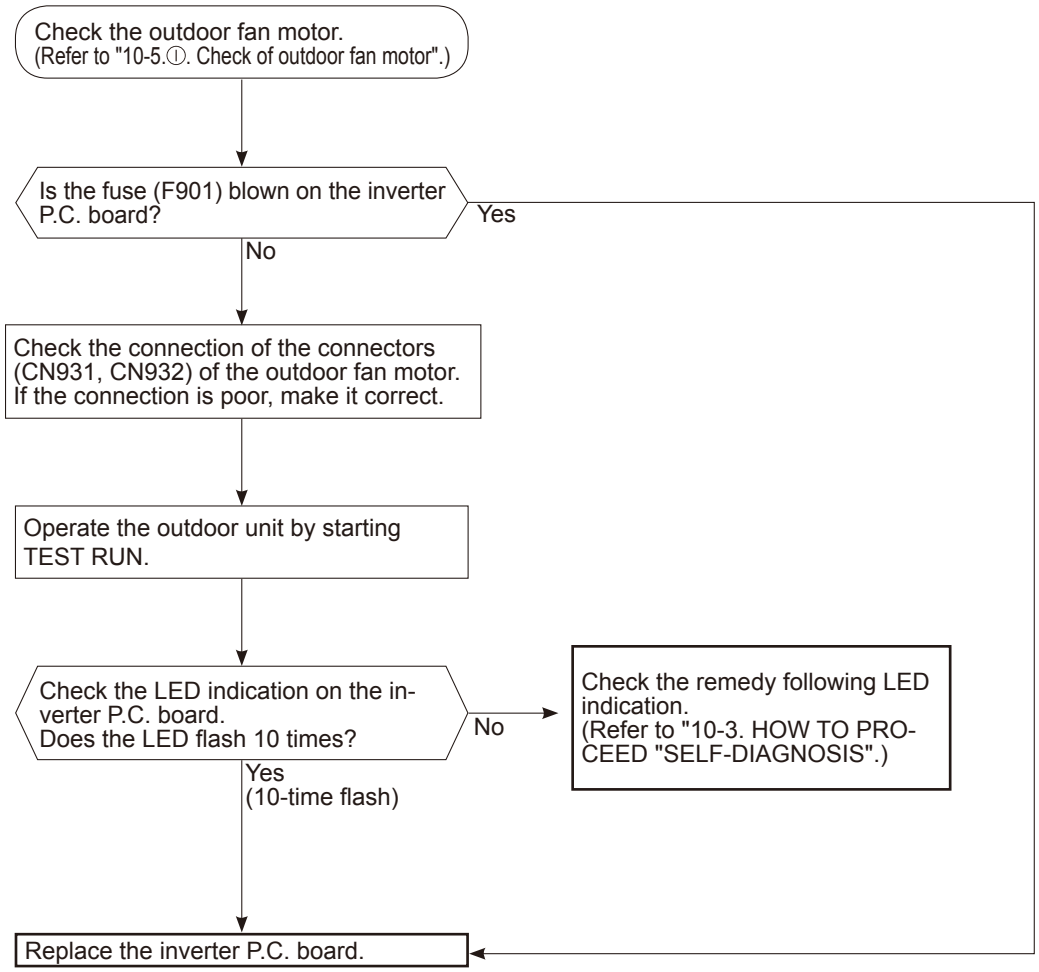

Ⓜ How to check miswiring and serial signal error

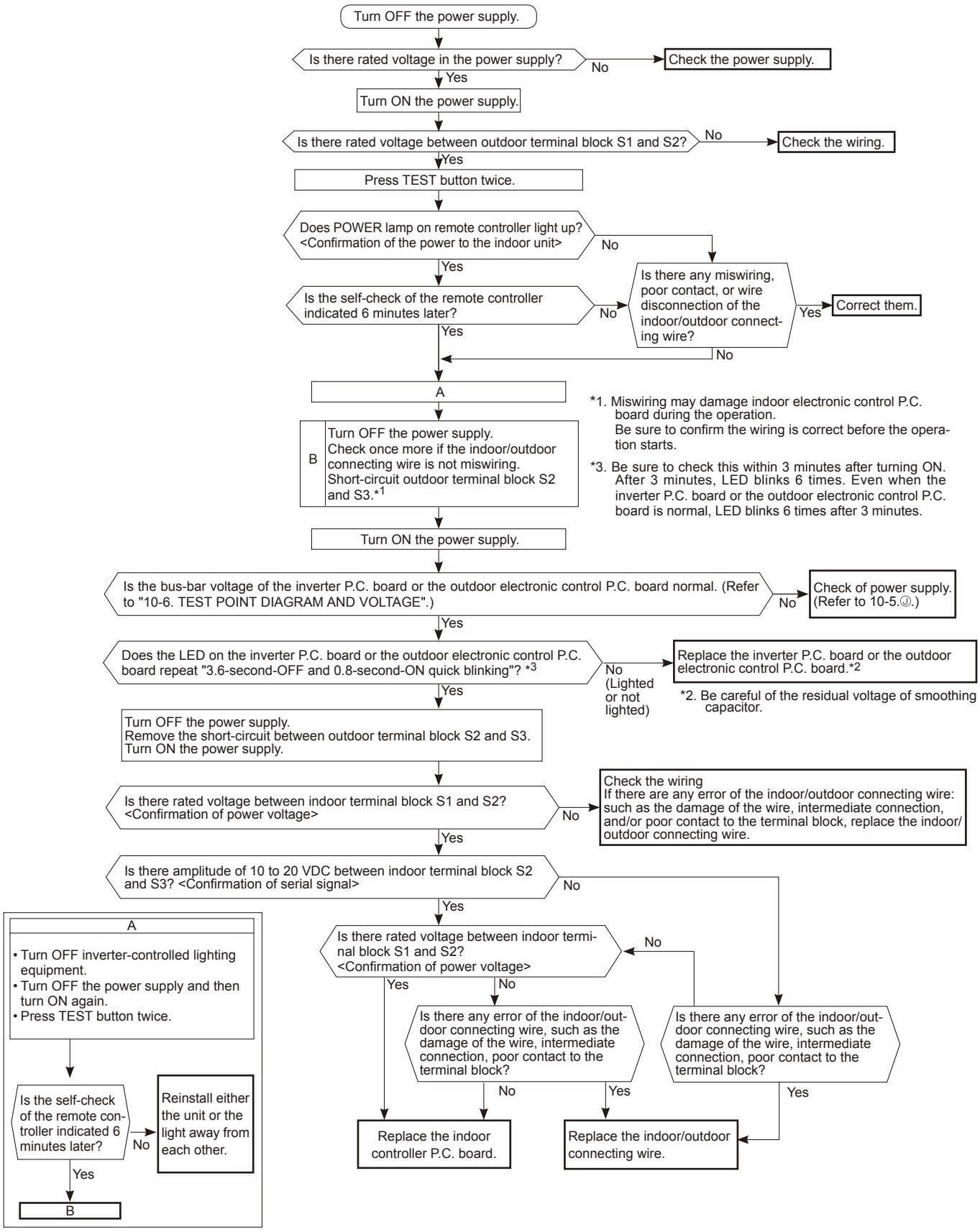

*1. Miswiring may damage indoor electronic control P.C. board during the operation.
Be sure to confirm the wiring is correct before the operation starts.

*3. Be sure to check this within 3 minutes after turning ON. After 3 minutes, LED blinks 6 times. Even when the inverter P.C. board or the outdoor electronic control P.C. board is normal, LED blinks 6 times after 3 minutes.

*2. Be careful of the residual voltage of smoothing capacitor.

Ⓝ Electromagnetic noise enters into TV sets or radios

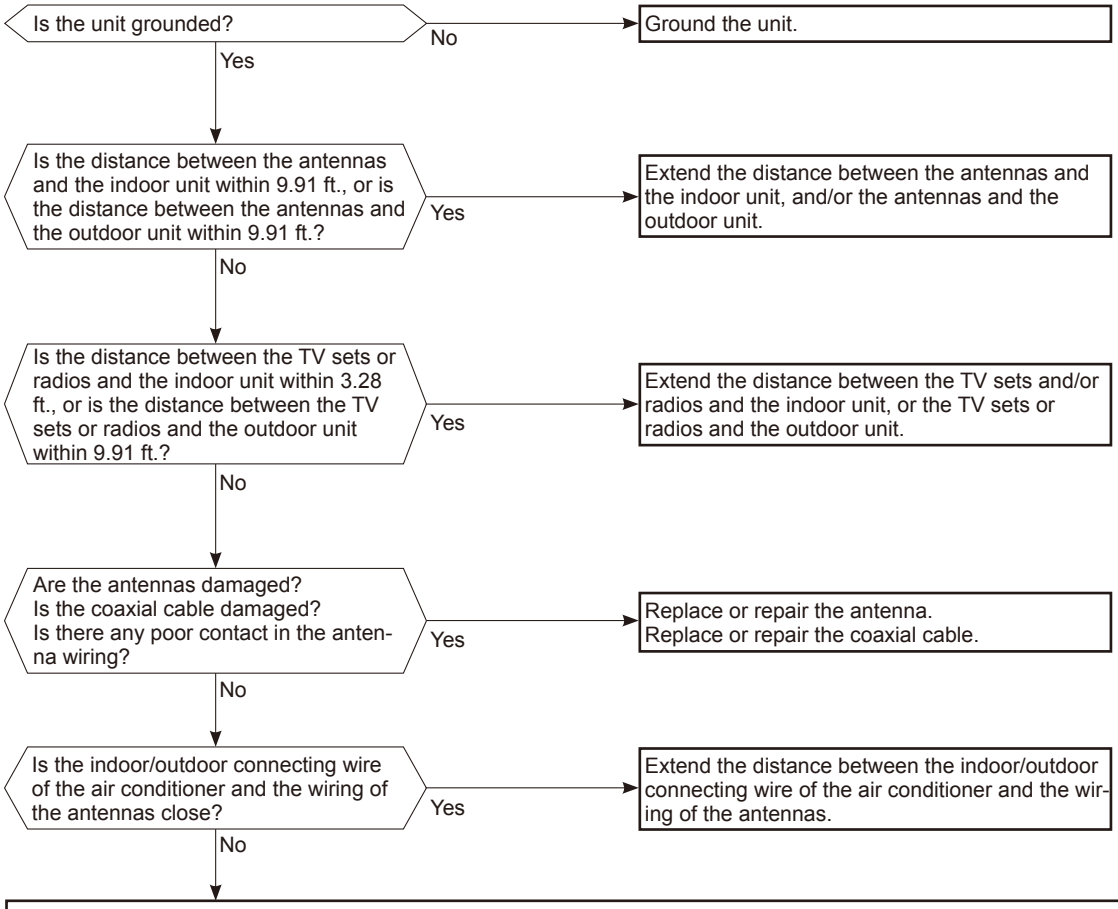

Even if all of the above conditions are fulfilled, the electromagnetic noise may enter, depending on the electric field strength or the installation condition (combination of specific conditions such as antennas or wiring).
Check the followings before asking for service.

1. Devices affected by the electromagnetic noise
   TV sets, radios (FM/AM broadcast, shortwave)
2. Channel, frequency, broadcast station affected by the electromagnetic noise
3. Channel, frequency, broadcast station unaffected by the electromagnetic noise
4. Layout of:
   indoor/outdoor unit of the air conditioner, indoor/outdoor wiring, grounding wire, antennas, wiring from antennas, receiver
5. Electric field intensity of the broadcast station affected by the electromagnetic noise
6. Presence or absence of amplifier such as booster
7. Operation condition of air conditioner when the electromagnetic noise enters in
   1) Turn OFF the power supply once, and then turn ON the power supply. In this situation, check for the electromagnetic noise.
   2) Within 3 minutes after turning ON the power supply, press OPERATE/STOP (ON/OFF) button on the remote controller for power ON, and check for the electromagnetic noise.
   3) After a short time (3 minutes later after turning ON), the outdoor unit starts running. During operation, check for the electromagnetic noise.
   4) Press OPERATE/STOP (ON/OFF) button on the remote controller for power OFF, when the outdoor unit stops but the indoor/outdoor communication still runs on. In this situation, check for the electromagnetic noise.

10-6. TEST POINT DIAGRAM AND VOLTAGE

Inverter P.C. board

SUZ-KA09NA **SUZ-KA12NA** **SUZ-KA15NA**

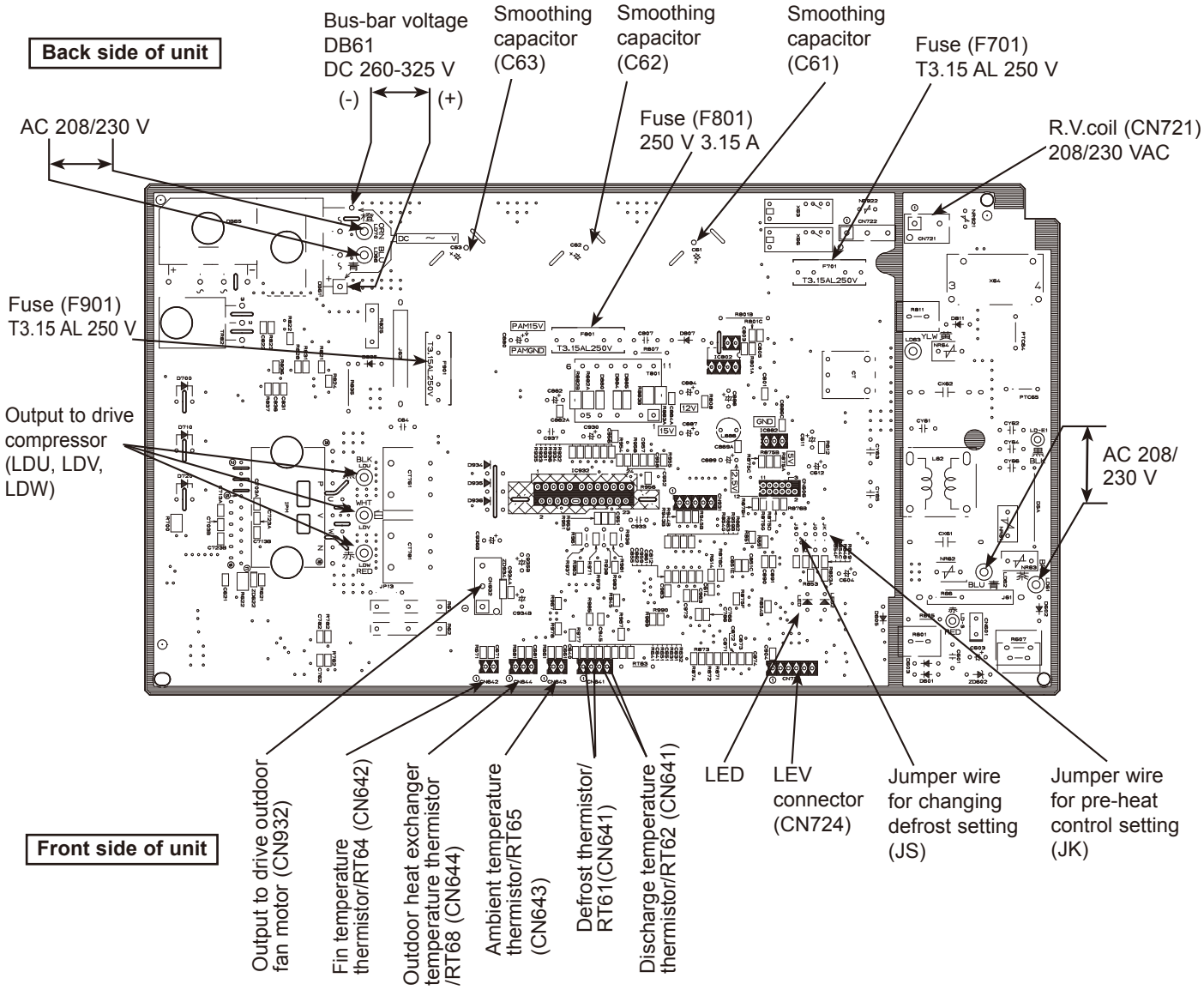

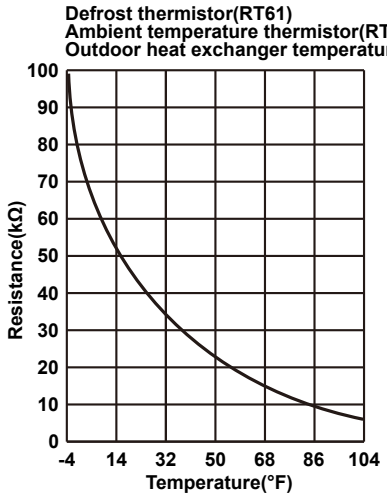

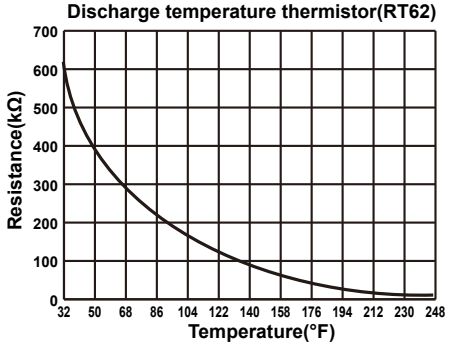

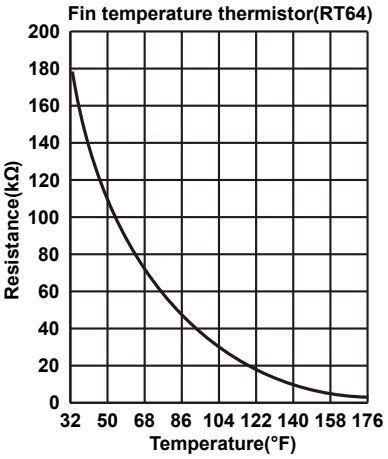

SUZ-KA18NA

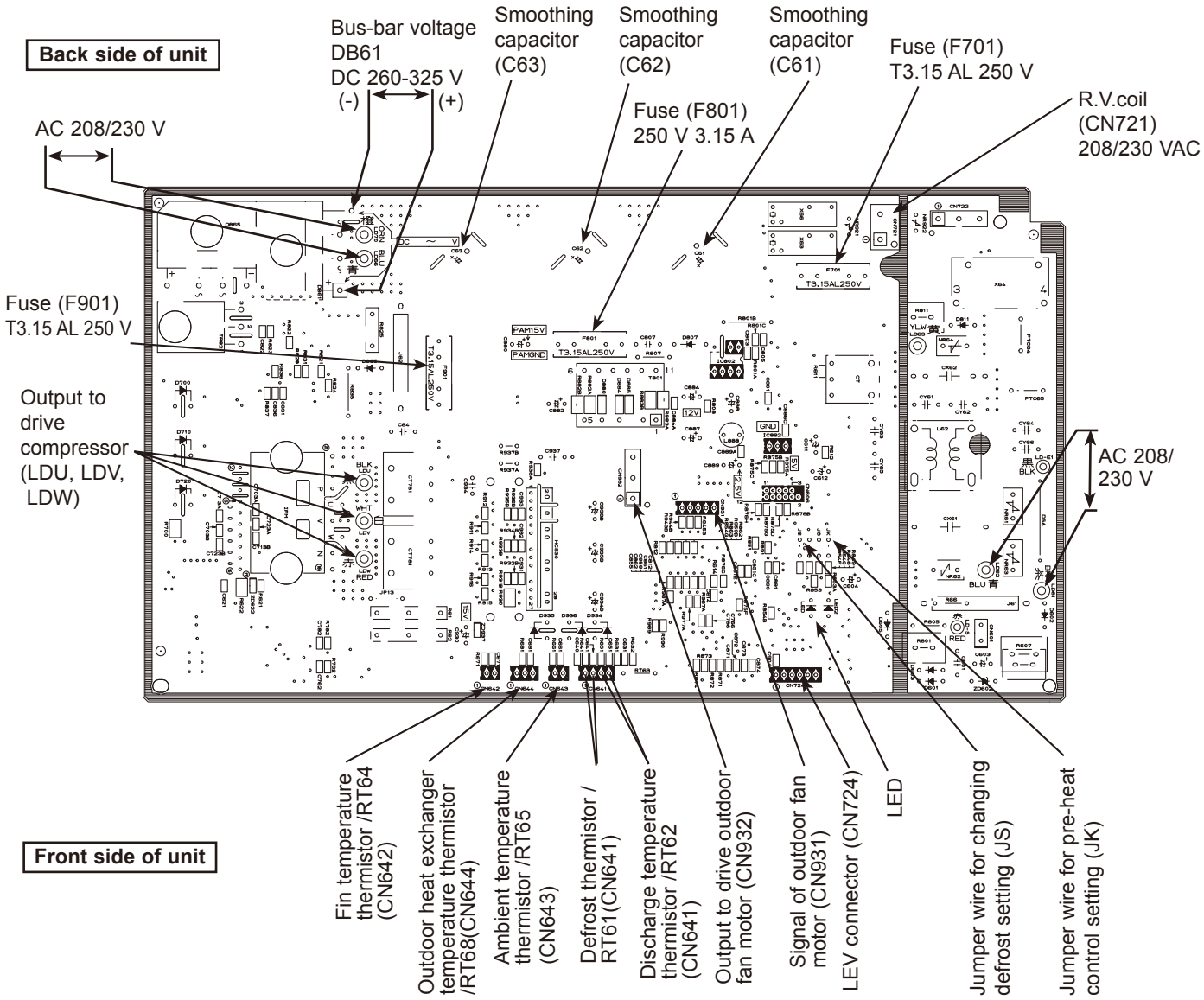
Back side of unit
Bus-bar voltage
DB61
DC 260-325 V
(-)
(+)
Smoothing capacitor (C63)
Smoothing capacitor (C62)
Smoothing capacitor (C61)
Fuse (F701)
T3.15 AL 250 V
R.V.coil
(CN721)
208/230 VAC
AC 208/230 V
Fuse (F801)
250 V 3.15 A
Fuse (F901)
T3.15 AL 250 V
Output to drive compressor (LDU, LDV, LDW)
AC 208/ 230 V
Front side of unit
Fin temperature thermistor /RT64 (CN642)
Outdoor heat exchanger temperature thermistor /RT68(CN644)
Ambient temperature thermistor /RT65 (CN643)
Defrost thermistor / RT61(CN641)
Discharge temperature thermistor /RT62 (CN641)
Output to drive outdoor fan motor (CN932)
Signal of outdoor fan motor (CN931)
LEV connector (CN724)
LED
Jumper wire for changing defrost setting (JS)
Jumper wire for pre-heat control setting (JK)

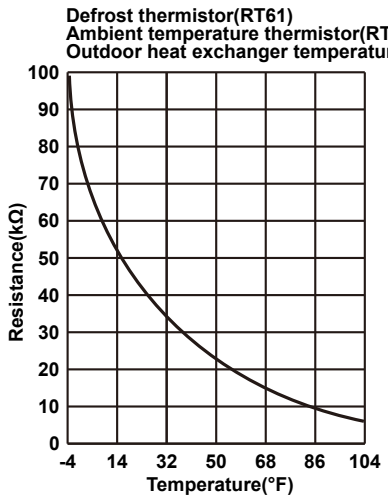
Defrost thermistor(RT61)
Ambient temperature thermistor(RT65)
Outdoor heat exchanger temperature thermistor(RT68)
Resistance(kΩ)
100
90
80
70
60
50
40
30
20
10
0
-4
14
32
50
68
86
104
Temperature(°F)

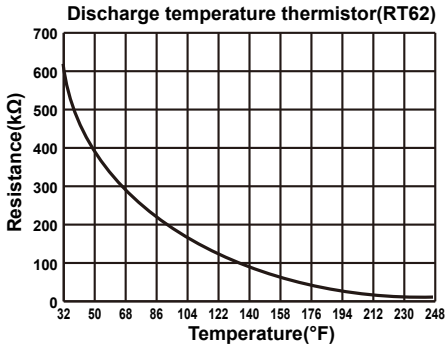
Discharge temperature thermistor(RT62)
Resistance(kΩ)
700
600
500
400
300
200
100
0
32
50
68
86
104
122
140
158
176
194
212
230
248
Temperature(°F)

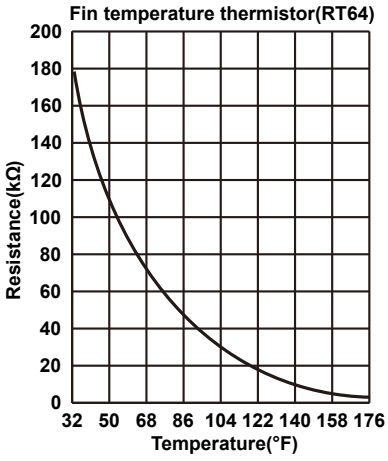
Fin temperature thermistor(RT64)
Resistance(kΩ)
200
180
160
140
120
100
80
60
40
20
0
32
50
68
86
104
122
140
158
176
Temperature(°F)

11 FUNCTION SETTING

11-1. UNIT FUNCTION SETTING BY THE REMOTE CONTROLLER (S series only)

Each function can be set according to necessity using the remote controller. The setting of function for each unit can only be done by the remote controller. Select function available from the table 1.

<Table 1> Function selections

(1) Functions available when setting the unit number to 00 (Select 00 referring to ④ setting the indoor unit number.)

Function	Settings	Mode No. Wired remote controller (RF thermostat)	Setting No.	● : Initial setting (when sent from the factory)	Check	Remarks
Power failure automatic recovery	Not available	01 (101)	1			The setting is applied to all the units in the same refrigerant system.
	Available (Approx. 4-minute wait-period after power is restored.)		2	●		
Indoor temperature detecting	Indoor unit's internal sensor	02 (—)	1	●		
			2			
	Data from main remote controller *1		3			
LOSSNAY connectivity	Not supported	03 (103)	1	●		
	Supported (indoor unit dose not intake outdoor air through LOSSNAY)		2			
	Supported (indoor unit intakes outdoor air through LOSSNAY)		3			
Power supply voltage	230V	04 (104)	1	●		
	208V		2			
Frost prevention temperature	2℃ [36°F] (Normal)	15 (115)	1	●		
	3℃ [37°F]		2			

*1 Can be set only when a wired remote controller is used.
When using 2 remote controllers (2-remote controller operation), the remote controller with built-in sensor must be set as a main remote controller.

(2) Functions are available when setting the unit number to 01.

Function	Settings	Mode No.	Setting No.	● : Initial setting (Factory setting) Ceiling conceald SEZ-KD·NA4	Ceiling cassette SLZ-KA·NA	Check
Filter sign	100h	07 (107)	1			
	2500h		2		●	
	No filter sign indicator		3	●		
External static pressure	5/15/35/50Pa (0.02/0.06/0.14/0.20in.WG)	08 (108)	Refer to the table below		—	
		10 (110)	Refer to the table below		—	
Heater control *2	Set temp -4.5°F ON	23 (123)	1	●	●	
	Set temp -1.8°F ON		2			
Set temperature in heating mode *3	Available	24 (124)	1	●	●	
	Not available		2			
Fan speed during the heating thermo OFF	Extra low	25 (125)	1	●	●	
	Stop		2			
	Set fan speed		3			
Fan speed during the cooling thermo OFF	Set fan speed	27 (127)	1	●	●	
	Stop		2			
Detection of abnormality of the pipe temperature (P8)	Available	28 (128)	1	●	●	
	Not available		2			

*2 For the detail of Heater control, refer to the service manual of SEZ-KD·NA4.
*3 4 degC (7.2 degF) up

External static pressure	Setting No. Mode No. 08	Mode No. 10	● : Initial setting (Factory setting)	Check
5Pa (0.02in.WG)	1	2		
15Pa (0.06in.WG)	1	1	●	
35Pa (0.14in.WG)	2	1		
50Pa (0.20in.WG)	3	1		

11-1-1. Selecting functions using the wired remote controller

First, try to familiarize yourself with the flow of the function selection procedure. In this section, an example of setting the room temperature detection position is given.
For actual operations, refer to steps ① to ⑩.

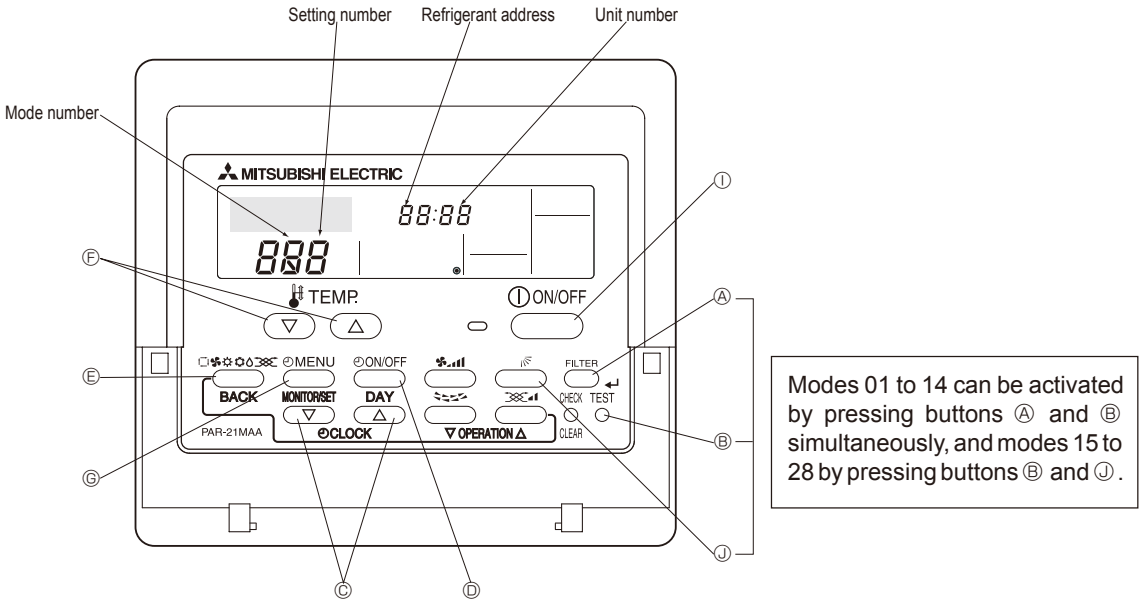

Selecting functions using the wired remote controller

① Check the function selection setting.

② Switch to function setting mode.*
(Press Ⓐ and Ⓑ at the same time with stop the remote controller.)

*For modes 15 and higher press Ⓙ and Ⓑ at the same time.

③ Specify refrigerant address 00 (outdoor unit).
④ Specify unit No. 00. (indoor unit)
(Use Ⓒ and Ⓓ.)

⑤ Enter the setting.
(Press Ⓔ.)

(Specified indoor unit: FAN operation)

Change refrigerant address or unit No.
YES
NO

⑥ Select mode No. 02
(room temperature detection position).
⑦ Select setting No. 03 (remote controller fixed).
(Use Ⓕ and Ⓖ.)

⑧ Enter the setting.
(Press Ⓔ.)

Example:
Selecting room temperature detection position

⑨

Finished
NO
YES

⑩ End function display.*
(Press Ⓐ and Ⓑ at the same time.)

The above procedure must be carried out only if changes are necessary.

[Operating Procedure]

① Check the function selection settings.
Changing the function selection settings for each mode will change its relevant mode function. Perform steps ② through ⑦ to check all the function selection settings, and write down the current settings in the Check column of the function selection <Table 1> in the chapter 11-1, and then change the settings as necessary.
For the initial settings, refer to the <Table 1> in the chapter 11-1. The following is the procedure to operate the remote controller internal sensor.

② Turn off the remote controller.
Hold down 2 buttons simultaneously for 2 seconds: the Ⓐ (FILTER) and Ⓑ (TEST) buttons to set the modes 01 through 14, and the Ⓙ ( ) and Ⓑ (TEST) buttons to set the modes 15 through 28.
The " FUNCTION SELECTION " will flash for a while and show "--" as below.

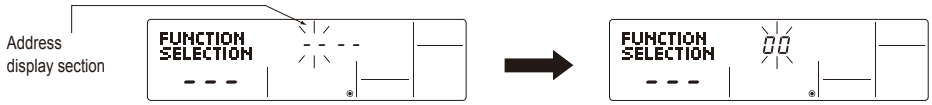

If the " FUNCTION SELECTION " and temperature displays flash "88" for 2 seconds and stop flashing, this seems to be an error. Check for noise source or interference around the transmission path.

Note: If the operation is made incorrectly before completion, finish operation by going to the step ⑩ and restart from the step ②.

③ Set the outdoor address.
Ⓒ Press the [CLOCK] buttons (▽ and △) to select the desired address. The address changes from "00" to "15".

④ Set the indoor unit No.
Press the Ⓓ (ON/OFF) button to flash "--" in the unit No. display.

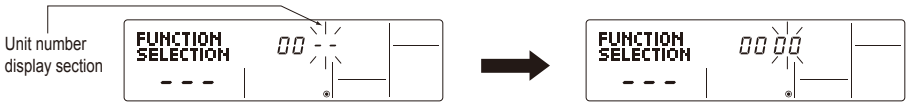

Ⓒ Press the [CLOCK] buttons(▽ and △) to indicate the indoor unit No. in turn such as 00 → 02 → 03 → 04 → AL.
Select the unit No. to which the function selection applies.

- To set the modes 01 through 06 or 15 through 22, select "00".
- To set the modes 07 through 14 or 23 through 28, select "01" or "02".

⑤ Confirm the address and unit No.
Press the Ⓔ (MODE) button to confirm the address and unit No.
After a while, the mode No. display will flash "--".

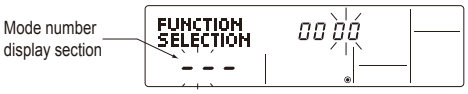

If the temperature display flashes "88", this indicates that the selected address does not exist in the system. Or, if the unit No. shows "F" and the address flashes, this indicates that the selected unit No. does not exist. In this case, set the correct address and unit No. at the steps ② through ③.

Ⓔ When the address and unit number are confirmed by pressing the (MODE) button, the corresponding indoor unit will start fan operation. This helps you find the location of the indoor unit for which you want to perform function selection.

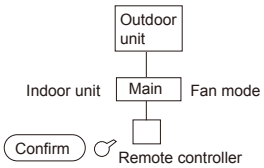

⑥ Select the mode number.
Ⓕ Press the [TEMP] buttons (▽ and △) to select the desired mode number.
(Only vaild mode numbers can be selected.)

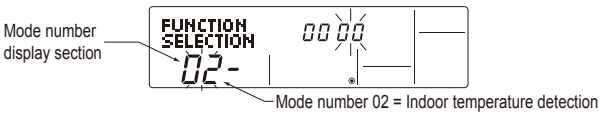

⑦ Select the setting No. in the selected mode.
Press the Ⓖ (MENU) button to flash the applying setting No. Check the current setting No. here.

Press the Ⓕ [TEMP] buttons (▽ and △) to select the desired setting No.

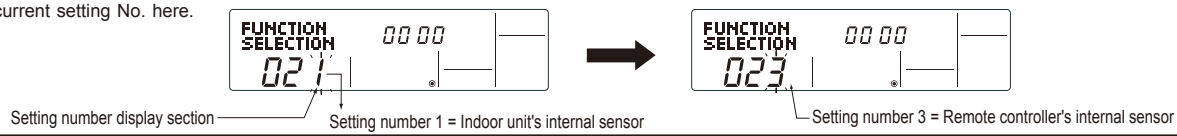

⑧ Confirm the settings made at the steps ③ through ⑦.
Press the Ⓔ (MODE) button to flash the mode No. and setting No., and to start registration.

The mode No. and setting No. stop flashing to confirm the settings.

If the mode No. or setting No. shows "---" and the temperature shows " 88, this seems to be a transmission error. Check for noise source or interference around the transmission path.

⑨ To make additional settings in the FUNCTION SELECTION screen, repeat the steps ③ through ⑧.
Note. After setting the modes 07 through 14, the modes 23 through 28 cannot be set continuously, or vice versa. In this case, after completing the settings for the modes 07 through 14 or 23 through 28, go to the step 10 to finish setting, and restart setting from the step 1.
At this point, wait for 30 seconds or more before restarting setting. Otherwise, the temperature may indicate "88".

⑩ Exit the Function Selection screen.
Hold down 2 buttons simultaneously for 2 seconds or more: the Ⓐ (FILTER) and Ⓑ (TEST) buttons for the modes 01 through 14, and the Ⓙ ( ) and Ⓑ (TEST) buttons for the modes 15 through 28.
After a few seconds the Function Selection screen returns to the OFF screen.

12 DISASSEMBLY INSTRUCTIONS

<"Terminal with locking mechanism" Detaching points>

The terminal which has the locking mechanism can be detached as shown below.
There are two types (refer to (1) and (2)) of the terminal with locking mechanism.
The terminal without locking mechanism can be detached by pulling it out.
Check the shape of the terminal before detaching.

(1) Slide the sleeve and check if there is a locking lever or not.

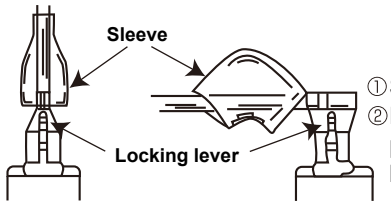

①Slide the sleeve.
②Pull the terminal while pushing the locking lever.

(2) The terminal with this connector has the locking mechanism.

①Hold the sleeve, and pull out the terminal slowly.

SUZ-KA09NA SUZ-KA12NA SUZ-KA15NA

NOTE: Turn OFF power supply before disassembling.

OPERATING PROCEDURE	PHOTOS
1. Removing the cabinet (1) Remove the screw fixing the service panel. (2) Pull down the service panel and remove it. (3) Remove the screws fixing the conduit cover. (4) Remove the conduit cover. (5) Disconnect the power supply wire and indoor/outdoor connecting wire. (6) Remove the screws fixing the top panel. (7) Remove the top panel. (8) Remove the screws fixing the cabinet. (9) Remove the cabinet. (10) Remove the screws fixing the back panel. (11) Remove the back panel. **Photo 2** 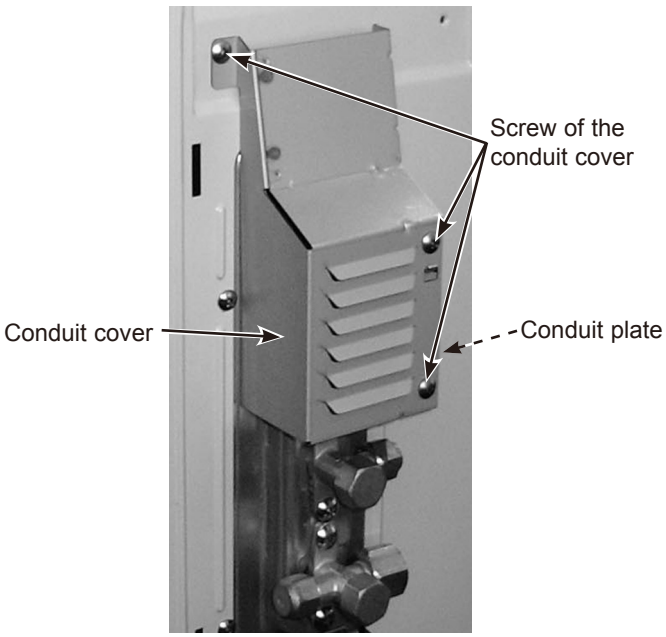 	**Photo 1** 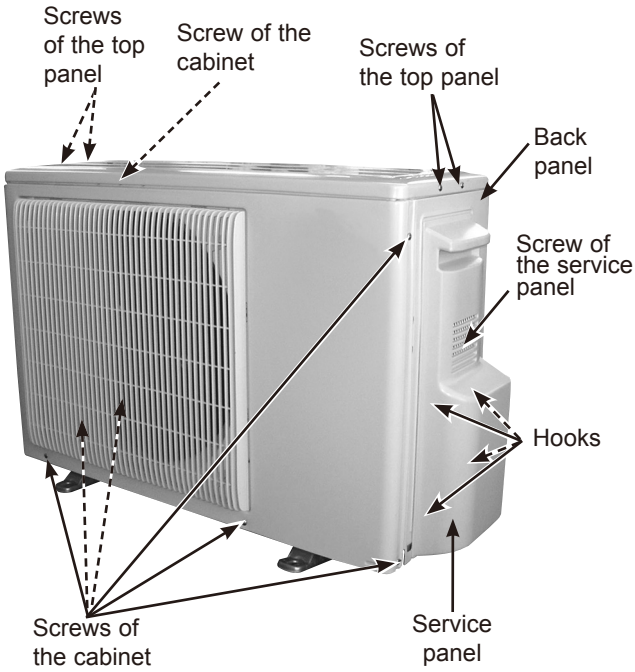

OPERATING PROCEDURE	PHOTOS
2. Removing the inverter assembly, inverter P.C. board (1) Remove the cabinet and panels. (Refer to procedure 1.) (2) Disconnect the lead wire to the reactor and the following connectors: <Inverter P.C. board> CN721 (R.V. coil) CN931, CN932 (Fan motor) CN641 (Defrost thermistor and discharge temperature thermistor) CN643 (Ambient temperature thermistor) CN644 (Outdoor heat exchanger temperature thermistor) CN724 (LEV) (3) Remove the compressor connector (CN61). (4) Remove the screws fixing the relay panel. (See Photo 3) (5) Remove the inverter assembly. (See Photo 4) (6) Remove the screw of the ground wire and screw of the T.B.support. (See Photo 4) (7) Remove the relay panel from the inverter assembly. (8) Remove the inverter P.C. board from the relay panel.	**Photo 3** 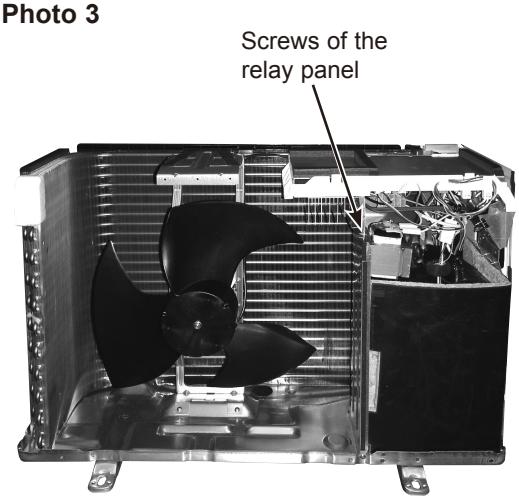 **Photo 4 (Inverter assembly)** 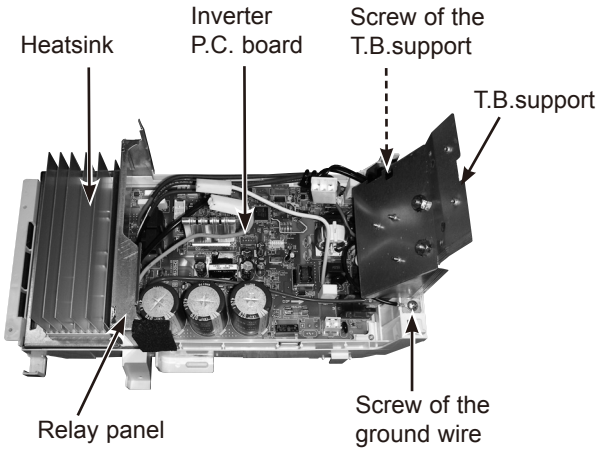
3. Removing R.V. coil (1) Remove the cabinet and panels. (Refer to procedure 1.) (2) Disconnect the following connectors: <Inverter P.C. board> CN721 (R.V. coil) (3) Remove the R.V. coil. (See Photo 5)	
4. Removing the discharge temperature thermistor, defrost thermistor, outdoor heat exchanger temperature thermistor and ambient temperature thermistor (1) Remove the cabinet and panels. (Refer to procedure 1.) (2) Disconnect the lead wire to the reactor and the following connectors: <Inverter P.C. board> CN641 (Defrost thermistor and discharge temperature thermistor) CN643 (Ambient temperature thermistor) CN644 (Outdoor heat exchanger temperature thermistor) (3) Pull out the discharge temperature thermistor from its holder. (See Photo 5) (4) Pull out the defrost thermistor from its holder. (See Photo 6) (5) Pull out the outdoor heat exchanger temperature thermistor from its holder. (See Photo 6) (6) Pull out the ambient temperature thermistor from its holder.	**Photo 5** 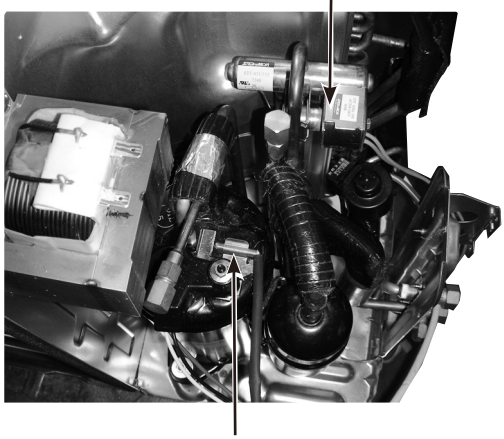

OPERATING PROCEDURE	PHOTOS
5. Removing outdoor fan motor (1) Remove the cabinet and panels. (Refer to procedure 1.) (2) Disconnect the following connectors: <Inverter P.C. board> CN931, CN932 (Fan motor) (3) Remove the propeller nut. (See Photo 7) (4) Remove the propeller. (See Photo 7) (5) Remove the screws fixing the fan motor. (See Photo 7) (6) Remove the fan motor.	**Photo 6** 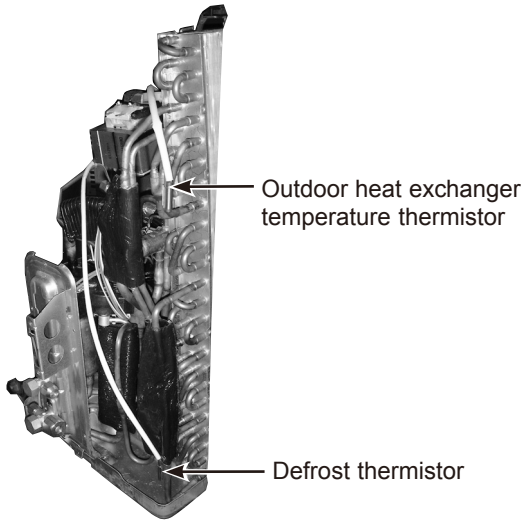
6. Removing the compressor and 4-way valve (1) Remove the cabinet and panels. (Refer to procedure 1.) (2) Remove the inverter assembly. (Refer to procedure 2.) (3) Recover gas from the refrigerant circuit. **NOTE:** Recover gas from the pipes until the pressure gauge shows 0 PSIG. (4) Detach the welded part of the suction and the discharge pipe connected with compressor. (5) Remove the nuts of compressor legs. (6) Remove the compressor. (7) Detach the welded part of pipes connected with 4-way valve. (See Photo 8.)	**Photo 7** 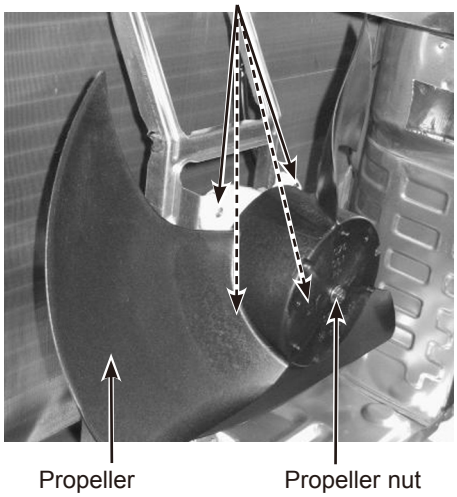 **Photo 8** 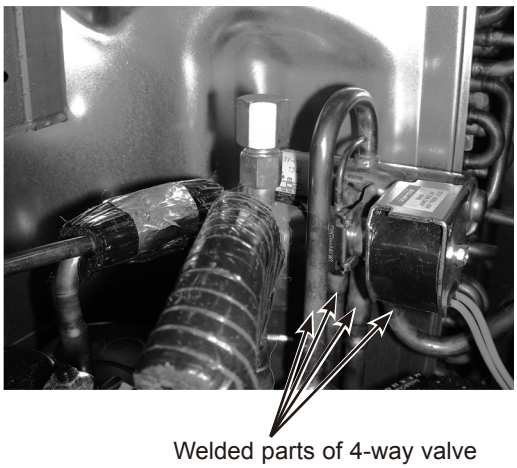

SUZ-KA18NA

NOTE: Turn OFF power supply before disassembling.

OPERATING PROCEDURE	PHOTOS
1. Removing the cabinet (1) Remove the screws of the service panel. (2) Remove the screws of the top panel. (3) Remove the screw of the valve cover. (4) Remove the service panel. (5) Remove the top panel. (6) Remove the valve cover. (7) Disconnect the power supply and indoor/outdoor connecting wire. (8) Remove the screws of the cabinet. (9) Remove the cabinet. (10) Remove the screws of the back panel. (11) Remove the back panel.	**Photo 1** 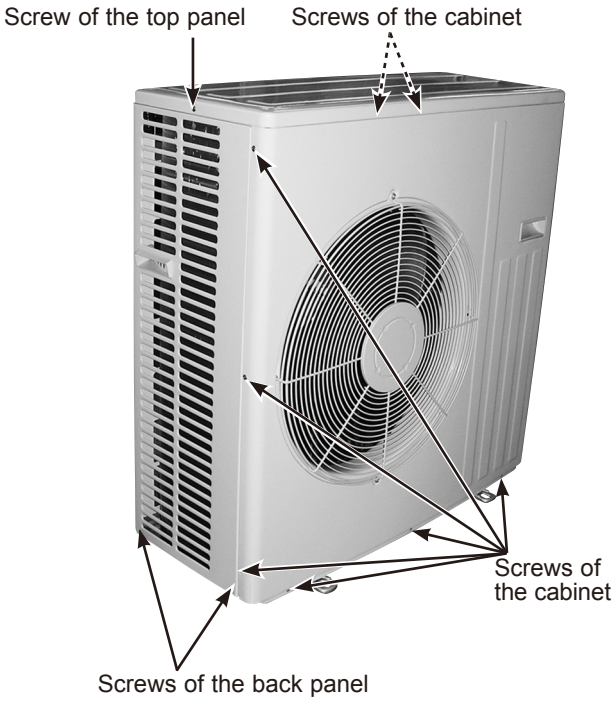 **Photo 2** 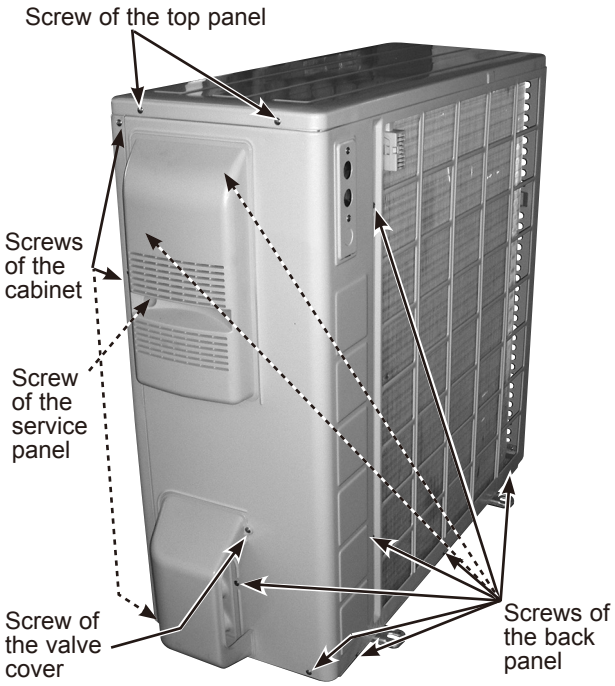

OPERATING PROCEDURE	PHOTOS
2. Removing the inverter assembly, inverter P.C. board (1) Remove the cabinet and panels. (Refer to procedure 1.) (2) Disconnect the lead wire to the reactor and the following connectors: <Inverter P.C. board> CN721 (R.V.coil) CN931, CN932 (Fan motor) CN641 (Defrost thermistor and discharge temperature thermistor) CN643 (Ambient temperature thermistor) CN644 (Outdoor heat exchanger temperature thermistor) CN724 (LEV) (3) Remove the compressor connector (CN61). (4) Remove the screws fixing the relay panel. (See Photo 3) (5) Remove the inverter assembly. (See Photo 4) (6) Remove the screw of the ground wire and screw of the T.B.support. (See Photo 4) (7) Remove the screw of the PB fixture. (8) Remove the relay panel from the PB support. (9) Remove the inverter P.C. board from the inverter assembly.	**Photo 3** Screws of the relay panel **Photo 4 (Inverter assembly)** 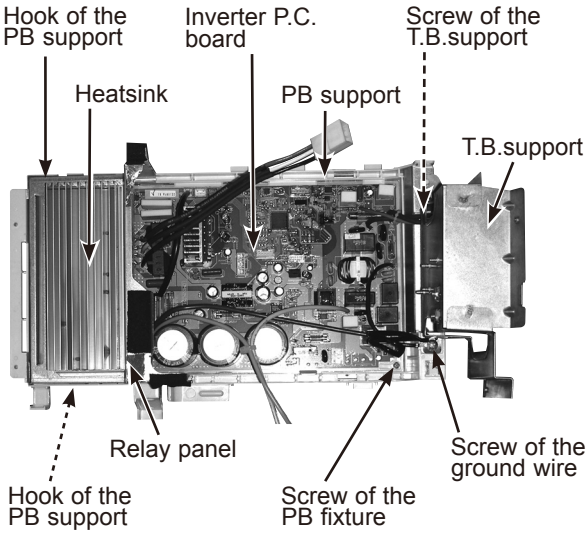
3. Removing R.V. coil (1) Remove the cabinet and panels. (Refer to procedure 1.) (2) Disconnect the following connectors: <Inverter P.C. board> CN721 (R.V. coil) (3) Remove the R.V. coil. (See Photo 5)	**Photo5** 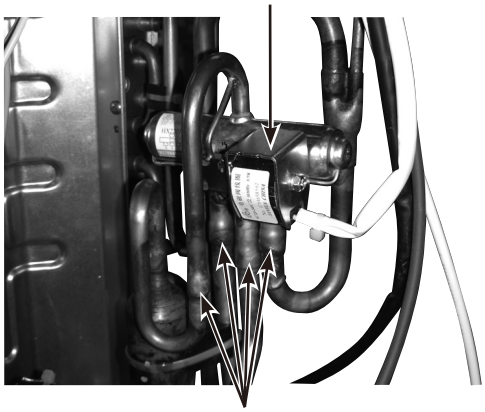

OPERATING PROCEDURE	PHOTOS
4. Removing the discharge temperature thermistor, defrost thermistor, outdoor heat exchanger temperature thermistor and ambient temperature thermistor (1) Remove the cabinet and panels. (Refer to procedure 1.) (2) Disconnect the lead wire to the reactor and the following connectors: <Inverter P.C. board> CN641 (Defrost thermistor and discharge temperature thermistor) CN643 (Ambient temperature thermistor) CN644 (Outdoor heat exchanger temperature thermistor) (3) Pull out the discharge temperature thermistor from its holder. (See Photo 8) (4) Pull out the defrost thermistor from its holder. (See Photo 6) (5) Pull out the outdoor heat exchanger temperature thermistor from its holder. (See Photo 6) (6) Pull out the ambient temperature thermistor from its holder. (See Photo 6)	**Photo 6** 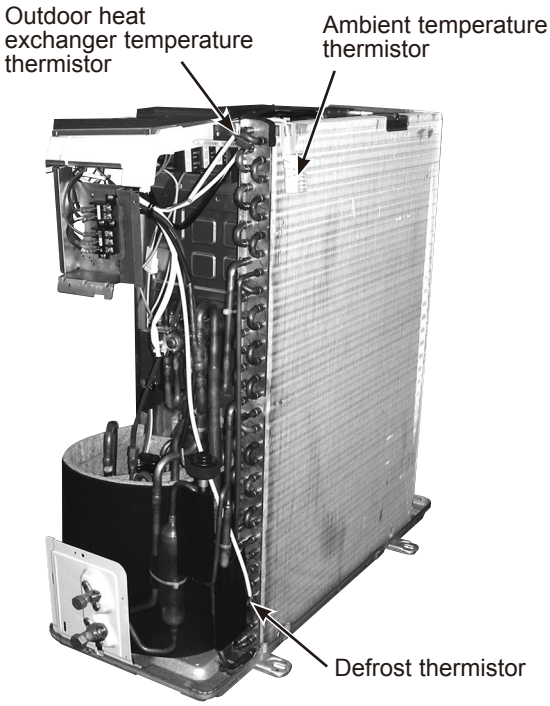
5. Removing outdoor fan motor (1) Remove the top panel, cabinet and service panel. (Refer to procedure 1.) (2) Disconnect the following connectors: <Inverter P.C. board> CN931 and CN932 (Fan motor) (3) Remove the propeller. (4) Remove the screws fixing the fan motor. (5) Remove the fan motor.	**Photo 7** 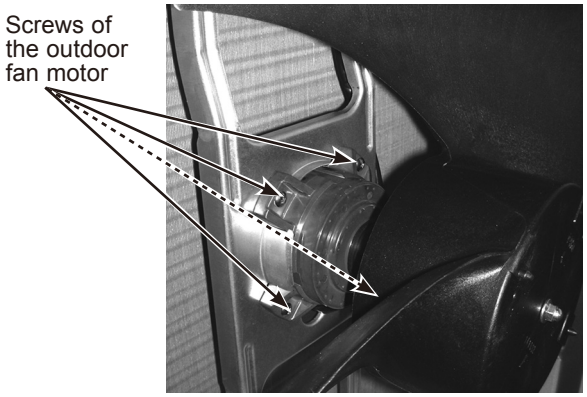
6. Removing the compressor and 4-way valve (1) Remove the top panel, cabinet and service panel. (Refer to procedure 1.) (2) Remove the back panel. (Refer to procedure 1.) (3) Remove the inverter assembly. (Refer to procedure 2.) (4) Recover gas from the refrigerant circuit. **NOTE:** Recover gas from the pipes until the pressure gauge shows 0 PSIG. (5) Detach the welded part of the suction and the discharge pipe connected with compressor. (6) Remove the compressor nuts. (7) Remove the compressor. (8) Detach the welded part of 4-way valve and pipe. (See Photo 5)	**Photo 8** 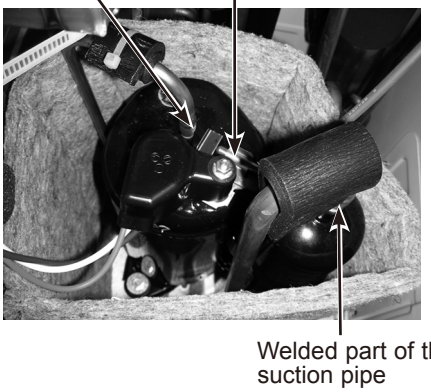

Mr.SLIM™

MITSUBISHI ELECTRIC CORPORATION

HEAD OFFICE : TOKYO BLDG., 2-7-3, MARUNOUCHI, CHIYODA-KU, TOKYO 100-8310, JAPAN

©Copyright 2010 MITSUBISHI ELECTRIC CORPORATION
Distributed in May 2014 No.OCH467 REVISED EDITION-C
Distributed in Aug. 2011 No.OCH467 REVISED EDITION-B
Distributed in Jul. 2011 No.OCH467 REVISED EDITION-A
Distributed in Jan. 2010 No.OCH467 PDF 4
Made in Japan

New publication, effective May 2014
Specifications are subject to change without notice.